This document was too large to scan as a single document. It has been divided into smaller sections.

Section 1

Document Information			
Document #	FOIA-2009-0051	Revision	
Title	FREEDOM OF INFORMATION ACT REQUEST (FOI 2009-0051)		
Date	09/09/2009		
Originator	RIEHLE DC	Originator Co.	DOE-RL
Recipient	CARPENTER T	Recipient Co.	HANFORD CHALLENGE
References			
Keywords	OCE, FOIA, SENSITIVE, PRIVATE CITIZEN		
Projects			
Other Information			

Department of Energy
Richland Operations Office
P.O. Box 550
Richland, Washington 99352

CERTIFIED MAIL

SEP 09 2009

Mr. Thomas Carpenter
Hanford Challenge
219 1st Avenue South, Suite 200
Seattle, Washington 98104

Dear Mr. Carpenter:

FREEDOM OF INFORMATION ACT REQUEST (FOI 2009-0051)

You requested, pursuant to the Freedom of Information Act (FOIA), the following records:

1. "Any and all Problem Evaluation Reports, also known as PERS, generated in relation to Washington River Protection (WPRS) since October 1, 2008, to present."
2. "Any and all responses and/or reports generated in response to such PERS."
3. "Any and all charts and/or graphs reflecting the filing, processing and/or tracking of PERS since October 1, 2008."

On June 24, 2009, you identified the Problem Evaluation Reports (PERS) that you wish to obtain from a listing this office previously provided to you on June 25, 2009, please see Enclosure I. In response to items 1 and 2, please see Enclosure II. In response to item 3, please see the listing provided as Enclosure I. No other documents were located.

Lastly, you requested a waiver of fees for any information provided to you. Your request has been granted. If you have any questions regarding your request, please contact me at our address above or on (509) 376-6288.

Sincerely,

Dorothy Riehle
Freedom of Information Act Officer
Office of Communications
and External Affairs

OCE:DCR

Enclosures

ENCLOSURE I

PERID	PERNumber	SignificanceLevelID
28801	WRPS-PER-2008-0001	Trend Only
28802	WRPS-PER-2008-0002	Trend Only
28803	WRPS-PER-2008-0003	Trend Only
28804	WRPS-PER-2008-0004	TUF - Track Until Fixed
28805	WRPS-PER-2008-0005	TUF - Track Until Fixed
28806	WRPS-PER-2008-0006	Trend Only
28807	WRPS-PER-2008-0007	PIE/CIM
28808	WRPS-PER-2008-0008	Trend Only
28809	WRPS-PER-2008-0009	PIE/CIM
28810	WRPS-PER-2008-0010	PER with Corrective Actions
28811	WRPS-PER-2008-0011	Trend Only
28812	WRPS-PER-2008-0012	PIE/CIM
28813	WRPS-PER-2008-0013	TUF - Track Until Fixed
28814	WRPS-PER-2008-0014	TUF - Track Until Fixed
28815	WRPS-PER-2008-0015	TUF - Track Until Fixed
28816	WRPS-PER-2008-0016	PER with Corrective Actions
28817	WRPS-PER-2008-0017	TUF - Track Until Fixed
28818	WRPS-PER-2008-0018	PER with Corrective Actions
28819	WRPS-PER-2008-0019	TUF - Track Until Fixed
28820	WRPS-PER-2008-0020	TUF - Track Until Fixed
28821	WRPS-PER-2008-0021	TUF - Track Until Fixed
28822	WRPS-PER-2008-0022	PER with Corrective Actions
28823	WRPS-PER-2008-0023	PER with Corrective Actions
28824	WRPS-PER-2008-0024	PIE/CIM
28825	WRPS-PER-2008-0025	PIE/CIM
28826	WRPS-PER-2008-0026	PIE/CIM
28827	WRPS-PER-2008-0027	PIE/CIM
28828	WRPS-PER-2008-0028	PIE/CIM
28829	WRPS-PER-2008-0029	PIE/CIM
28830	WRPS-PER-2008-0030	PIE/CIM
28831	WRPS-PER-2008-0031	PIE/CIM
28832	WRPS-PER-2008-0032	TUF - Track Until Fixed
28833	WRPS-PER-2008-0033	PIE/CIM
28834	WRPS-PER-2008-0034	PIE/CIM
28835	WRPS-PER-2008-0035	PIE/CIM
28836	WRPS-PER-2008-0036	TUF - Track Until Fixed

28837	WRPS-PER-2008-0037	INVALID
28838	WRPS-PER-2008-0038	TUF - Track Until Fixed
28839	WRPS-PER-2008-0039	TUF - Track Until Fixed
28840	WRPS-PER-2008-0040	PER with Corrective Actions
28841	WRPS-PER-2008-0041	PER with Corrective Actions
28842	WRPS-PER-2008-0042	INVALID
28843	WRPS-PER-2008-0043	PIE/CIM
28844	WRPS-PER-2008-0044	PIE/CIM
28845	WRPS-PER-2008-0045	Trend Only
28846	WRPS-PER-2008-0046	Trend Only
28847	WRPS-PER-2008-0047	PIE/CIM
28848	WRPS-PER-2008-0048	PIE/CIM
28849	WRPS-PER-2008-0049	TUF - Track Until Fixed
28850	WRPS-PER-2008-0050	PER with Corrective Actions
28851	WRPS-PER-2008-0051	TUF - Track Until Fixed
28852	WRPS-PER-2008-0052	Trend Only
28853	WRPS-PER-2008-0053	INVALID
28854	WRPS-PER-2008-0054	INVALID
28855	WRPS-PER-2008-0055	INVALID
28856	WRPS-PER-2008-0056	INVALID
28857	WRPS-PER-2008-0057	Trend Only
28858	WRPS-PER-2008-0058	INVALID
28859	WRPS-PER-2008-0059	TUF - Track Until Fixed
28860	WRPS-PER-2008-0060	TUF - Track Until Fixed
28861	WRPS-PER-2008-0061	TUF - Track Until Fixed
28862	WRPS-PER-2008-0062	PIE/CIM
28863	WRPS-PER-2008-0063	PIE/CIM
28864	WRPS-PER-2008-0064	TUF - Track Until Fixed
28865	WRPS-PER-2008-0065	PIE/CIM
28866	WRPS-PER-2008-0066	TUF - Track Until Fixed
28867	WRPS-PER-2008-0067	TUF - Track Until Fixed
28868	WRPS-PER-2008-0068	TUF - Track Until Fixed
28869	WRPS-PER-2008-0069	TUF - Track Until Fixed
28870	WRPS-PER-2008-0070	PIE/CIM

28871	WRPS-PER-2008-0071	PIE/CIM
28872	WRPS-PER-2008-0072	PIE/CIM
28873	WRPS-PER-2008-0073	TUF - Track Until Fixed
28874	WRPS-PER-2008-0074	Trend Only
28875	WRPS-PER-2008-0075	Trend Only
28876	WRPS-PER-2008-0076	PIE/CIM
28877	WRPS-PER-2008-0077	PIE/CIM
28878	WRPS-PER-2008-0078	PIE/CIM
28879	WRPS-PER-2008-0079	PIE/CIM
28880	WRPS-PER-2008-0080	PER with Corrective Actions
28881	WRPS-PER-2008-0081	Trend Only
28882	WRPS-PER-2008-0082	Trend Only
28883	WRPS-PER-2008-0083	Trend Only
28884	WRPS-PER-2008-0084	PER with Corrective Actions
28885	WRPS-PER-2008-0085	PER with Corrective Actions
28886	WRPS-PER-2008-0086	Trend Only
28887	WRPS-PER-2008-0087	PIE/CIM
28888	WRPS-PER-2008-0088	PER with Corrective Actions
28889	WRPS-PER-2008-0089	Trend Only
28890	WRPS-PER-2008-0090	Trend Only
28891	WRPS-PER-2008-0091	Trend Only
28892	WRPS-PER-2008-0092	Trend Only
28893	WRPS-PER-2008-0093	PER with Corrective Actions
28894	WRPS-PER-2008-0094	PIE/CIM
28895	WRPS-PER-2008-0095	PER with Corrective Actions
28896	WRPS-PER-2008-0096	PIE/CIM
28897	WRPS-PER-2008-0097	PIE/CIM
28898	WRPS-PER-2008-0098	Trend Only
28899	WRPS-PER-2008-0099	TUF - Track Until Fixed
28900	WRPS-PER-2008-0100	Trend Only
28901	WRPS-PER-2008-0101	TUF - Track Until Fixed
28902	WRPS-PER-2008-0102	Trend Only
28903	WRPS-PER-2008-0103	PIE/CIM

28904	WRPS-PER-2008-0104	Trend Only
28905	WRPS-PER-2008-0105	Trend Only
28906	WRPS-PER-2008-0106	TUF - Track Until Fixed
28907	WRPS-PER-2008-0107	PIE/CIM
28908	WRPS-PER-2008-0108	Trend Only
28909	WRPS-PER-2008-0109	PIE/CIM
28910	WRPS-PER-2008-0110	TUF - Track Until Fixed
28911	WRPS-PER-2008-0111	TUF - Track Until Fixed
28912	WRPS-PER-2008-0112	PER with Corrective Actions
28913	WRPS-PER-2008-0113	PER with Corrective Actions
28914	WRPS-PER-2008-0114	PER with Corrective Actions
28915	WRPS-PER-2008-0115	TUF - Track Until Fixed
28916	WRPS-PER-2008-0116	Trend Only
28917	WRPS-PER-2008-0117	TUF - Track Until Fixed
28918	WRPS-PER-2008-0118	PIE/CIM
28919	WRPS-PER-2008-0119	TUF - Track Until Fixed
28920	WRPS-PER-2008-0120	PIE/CIM
28921	WRPS-PER-2008-0121	TUF - Track Until Fixed
28922	WRPS-PER-2008-0122	INVALID
28923	WRPS-PER-2008-0123	TUF - Track Until Fixed
28924	WRPS-PER-2008-0124	TUF - Track Until Fixed
28925	WRPS-PER-2008-0125	TUF - Track Until Fixed
28926	WRPS-PER-2008-0126	TUF - Track Until Fixed
28927	WRPS-PER-2008-0127	PIE/CIM
28928	WRPS-PER-2008-0128	PIE/CIM
28929	WRPS-PER-2008-0129	Trend Only
28930	WRPS-PER-2008-0130	PIE/CIM
28931	WRPS-PER-2008-0131	PIE/CIM
28932	WRPS-PER-2008-0132	PIE/CIM
28933	WRPS-PER-2008-0133	Trend Only
28934	WRPS-PER-2008-0134	Trend Only
28935	WRPS-PER-2008-0135	PER with Corrective Actions
28936	WRPS-PER-2008-0136	TUF - Track Until Fixed
28937	WRPS-PER-2008-0137	PER with Corrective Actions
28938	WRPS-PER-2008-0138	PIE/CIM
28939	WRPS-PER-2008-0139	TUF - Track Until Fixed
28940	WRPS-PER-2008-0140	Trend Only
28941	WRPS-PER-2008-0141	TUF - Track Until Fixed

28942	WRPS-PER-2008-0142	PIE/CIM
28943	WRPS-PER-2008-0143	TUF - Track Until Fixed
28944	WRPS-PER-2008-0144	PIE/CIM
28945	WRPS-PER-2008-0145	Trend Only
28946	WRPS-PER-2008-0146	PER with Corrective Actions
28947	WRPS-PER-2008-0147	PER with Corrective Actions
28948	WRPS-PER-2008-0148	TUF - Track Until Fixed
28949	WRPS-PER-2008-0149	PIE/CIM
28950	WRPS-PER-2008-0150	TUF - Track Until Fixed
28951	WRPS-PER-2008-0151	Trend Only
28952	WRPS-PER-2008-0152	Trend Only
28953	WRPS-PER-2008-0153	PER with Corrective Actions
28954	WRPS-PER-2008-0154	Trend Only
28955	WRPS-PER-2008-0155	TUF - Track Until Fixed
28956	WRPS-PER-2008-0156	TUF - Track Until Fixed
28957	WRPS-PER-2008-0157	PER with Corrective Actions
28958	WRPS-PER-2008-0158	Trend Only
28959	WRPS-PER-2008-0159	TUF - Track Until Fixed
28960	WRPS-PER-2008-0160	PER with Corrective Actions
28961	WRPS-PER-2008-0161	PIE/CIM
28962	WRPS-PER-2008-0162	TUF - Track Until Fixed
28963	WRPS-PER-2008-0163	TUF - Track Until Fixed
28964	WRPS-PER-2008-0164	TUF - Track Until Fixed
28965	WRPS-PER-2008-0165	PIE/CIM
28966	WRPS-PER-2008-0166	PIE/CIM
28967	WRPS-PER-2008-0167	PER with Corrective Actions
28968	WRPS-PER-2008-0168	TUF - Track Until Fixed
28969	WRPS-PER-2008-0169	Trend Only
28970	WRPS-PER-2008-0170	TUF - Track Until Fixed
28971	WRPS-PER-2008-0171	PER with Corrective Actions
28972	WRPS-PER-2008-0172	PIE/CIM
28973	WRPS-PER-2008-0173	PER with Corrective Actions
28974	WRPS-PER-2008-0174	PIE/CIM
28975	WRPS-PER-2008-0175	Trend Only
28976	WRPS-PER-2008-0176	TUF - Track Until Fixed
28977	WRPS-PER-2008-0177	TUF - Track Until Fixed

28978	WRPS-PER-2008-0178	Trend Only
28979	WRPS-PER-2008-0179	PER with Corrective Actions
28980	WRPS-PER-2008-0180	TUF - Track Until Fixed
28981	WRPS-PER-2008-0181	Trend Only
28982	WRPS-PER-2008-0182	TUF - Track Until Fixed
28983	WRPS-PER-2008-0183	TUF - Track Until Fixed
28984	WRPS-PER-2008-0184	Trend Only
28985	WRPS-PER-2008-0185	PIE/CIM
28986	WRPS-PER-2008-0186	PIE/CIM
28987	WRPS-PER-2008-0187	Trend Only
28988	WRPS-PER-2008-0188	PIE/CIM
28989	WRPS-PER-2008-0189	Significant - Significant PER with Corrective
28990	WRPS-PER-2008-0190	INVALID
28991	WRPS-PER-2008-0191	TUF - Track Until Fixed
28992	WRPS-PER-2008-0192	TUF - Track Until Fixed
28993	WRPS-PER-2008-0193	Trend Only
28994	WRPS-PER-2008-0194	Trend Only
28995	WRPS-PER-2008-0195	TUF - Track Until Fixed
28996	WRPS-PER-2008-0196	PIE/CIM
28997	WRPS-PER-2008-0197	TUF - Track Until Fixed
28998	WRPS-PER-2008-0198	TUF - Track Until Fixed
28999	WRPS-PER-2008-0199	PER with Corrective Actions
29000	WRPS-PER-2008-0200	Trend Only
29001	WRPS-PER-2008-0201	PER with Corrective Actions
29002	WRPS-PER-2008-0202	TUF - Track Until Fixed
29003	WRPS-PER-2008-0203	TUF - Track Until Fixed
29004	WRPS-PER-2008-0204	Trend Only
29005	WRPS-PER-2008-0205	TUF - Track Until Fixed
29006	WRPS-PER-2008-0206	PIE/CIM
29007	WRPS-PER-2008-0207	PIE/CIM
29008	WRPS-PER-2008-0208	PIE/CIM
29009	WRPS-PER-2008-0209	TUF - Track Until Fixed
29010	WRPS-PER-2008-0210	PER with Corrective Actions
29011	WRPS-PER-2008-0211	TUF - Track Until Fixed
29012	WRPS-PER-2008-0212	PIE/CIM

29013	WRPS-PER-2008-0213	PIE/CIM
29014	WRPS-PER-2008-0214	PIE/CIM
29015	WRPS-PER-2008-0215	PER with Corrective Actions
29016	WRPS-PER-2008-0216	TUF - Track Until Fixed
29017	WRPS-PER-2008-0217	TUF - Track Until Fixed
29018	WRPS-PER-2008-0218	TUF - Track Until Fixed
29019	WRPS-PER-2008-0219	TUF - Track Until Fixed
29020	WRPS-PER-2008-0220	TUF - Track Until Fixed
29021	WRPS-PER-2008-0221	TUF - Track Until Fixed
29022	WRPS-PER-2008-0222	TUF - Track Until Fixed
29023	WRPS-PER-2008-0223	TUF - Track Until Fixed
29024	WRPS-PER-2008-0224	TUF - Track Until Fixed
29025	WRPS-PER-2008-0225	PIE/CIM
29026	WRPS-PER-2008-0226	TUF - Track Until Fixed
29027	WRPS-PER-2008-0227	PIE/CIM
29028	WRPS-PER-2008-0228	PIE/CIM
29029	WRPS-PER-2008-0229	PER with Corrective Actions
29030	WRPS-PER-2008-0230	Trend Only
29031	WRPS-PER-2008-0231	TUF - Track Until Fixed
29032	WRPS-PER-2008-0232	PIE/CIM
29033	WRPS-PER-2008-0233	TUF - Track Until Fixed
29034	WRPS-PER-2008-0234	PIE/CIM
29035	WRPS-PER-2008-0235	TUF - Track Until Fixed
29036	WRPS-PER-2008-0236	TUF - Track Until Fixed
29037	WRPS-PER-2008-0237	TUF - Track Until Fixed
29038	WRPS-PER-2008-0238	TUF - Track Until Fixed
29039	WRPS-PER-2008-0239	Trend Only
29040	WRPS-PER-2008-0240	Trend Only
29041	WRPS-PER-2008-0241	PIE/CIM
29042	WRPS-PER-2008-0242	PIE/CIM
29043	WRPS-PER-2008-0243	PIE/CIM
29044	WRPS-PER-2008-0244	PIE/CIM
29045	WRPS-PER-2008-0245	Trend Only
29046	WRPS-PER-2008-0246	TUF - Track Until Fixed

29047	WRPS-PER-2008-0247	TUF - Track Until Fixed
29048	WRPS-PER-2008-0248	TUF - Track Until Fixed
29049	WRPS-PER-2008-0249	PIE/CIM
29050	WRPS-PER-2008-0250	PIE/CIM
29051	WRPS-PER-2008-0251	INVALID
29052	WRPS-PER-2008-0252	PIE/CIM
29053	WRPS-PER-2008-0253	PIE/CIM
29054	WRPS-PER-2008-0254	PIE/CIM
29055	WRPS-PER-2008-0255	PER with Corrective Actions
29056	WRPS-PER-2008-0256	PIE/CIM
29057	WRPS-PER-2008-0257	PIE/CIM
29058	WRPS-PER-2008-0258	PIE/CIM
29059	WRPS-PER-2008-0259	PIE/CIM
29060	WRPS-PER-2008-0260	PER with Corrective Actions
29061	WRPS-PER-2008-0261	Trend Only
29062	WRPS-PER-2008-0262	TUF - Track Until Fixed
29063	WRPS-PER-2008-0263	PIE/CIM
29064	WRPS-PER-2008-0264	PIE/CIM
29065	WRPS-PER-2008-0265	TUF - Track Until Fixed
29066	WRPS-PER-2008-0266	PIE/CIM
29067	WRPS-PER-2008-0267	PIE/CIM
29068	WRPS-PER-2008-0268	PIE/CIM
29069	WRPS-PER-2008-0269	PER with Corrective Actions
29070	WRPS-PER-2008-0270	PER with Corrective Actions
29071	WRPS-PER-2008-0271	PIE/CIM
29072	WRPS-PER-2008-0272	PIE/CIM
29073	WRPS-PER-2008-0273	PER with Corrective Actions
29074	WRPS-PER-2008-0274	TUF - Track Until Fixed
29075	WRPS-PER-2008-0275	PIE/CIM

29076	WRPS-PER-2008-0276	PIE/CIM
29077	WRPS-PER-2008-0277	PIE/CIM
29078	WRPS-PER-2008-0278	TUF - Track Until Fixed
29079	WRPS-PER-2008-0279	Significant - Significant PER with Corrective
29080	WRPS-PER-2008-0280	TUF - Track Until Fixed
29081	WRPS-PER-2008-0281	PIE/CIM
29082	WRPS-PER-2008-0282	PIE/CIM
29083	WRPS-PER-2008-0283	TUF - Track Until Fixed
29084	WRPS-PER-2008-0284	TUF - Track Until Fixed
29085	WRPS-PER-2008-0285	TUF - Track Until Fixed
29086	WRPS-PER-2008-0286	TUF - Track Until Fixed
29087	WRPS-PER-2008-0287	TUF - Track Until Fixed
29088	WRPS-PER-2008-0288	PIE/CIM
29089	WRPS-PER-2008-0289	PIE/CIM
29090	WRPS-PER-2008-0290	TUF - Track Until Fixed
29091	WRPS-PER-2008-0291	PIE/CIM
29092	WRPS-PER-2008-0292	TUF - Track Until Fixed
29093	WRPS-PER-2008-0293	TUF - Track Until Fixed
29094	WRPS-PER-2008-0294	TUF - Track Until Fixed
29095	WRPS-PER-2008-0295	PIE/CIM
29096	WRPS-PER-2008-0296	TUF - Track Until Fixed
29097	WRPS-PER-2008-0297	PIE/CIM
29098	WRPS-PER-2008-0298	TUF - Track Until Fixed
29099	WRPS-PER-2008-0299	TUF - Track Until Fixed
29100	WRPS-PER-2008-0300	PIE/CIM
29101	WRPS-PER-2008-0301	TUF - Track Until Fixed
29102	WRPS-PER-2008-0302	PIE/CIM
29103	WRPS-PER-2008-0303	PIE/CIM
29104	WRPS-PER-2008-0304	Trend Only
29105	WRPS-PER-2008-0305	Trend Only
29106	WRPS-PER-2008-0306	Trend Only
29107	WRPS-PER-2008-0307	PER with Corrective Actions
29108	WRPS-PER-2008-0308	PIE/CIM
29109	WRPS-PER-2008-0309	Significant - Significant PER with Corrective
29110	WRPS-PER-2008-0310	PER with Corrective Actions
29111	WRPS-PER-2008-0311	PIE/CIM
29112	WRPS-PER-2008-0312	TUF - Track Until Fixed
29113	WRPS-PER-2008-0313	PIE/CIM
29114	WRPS-PER-2008-0314	TUF - Track Until Fixed
29115	WRPS-PER-2008-0315	PIE/CIM
29116	WRPS-PER-2008-0316	PER with Corrective Actions

29117	WRPS-PER-2008-0317	PIE/CIM
29118	WRPS-PER-2008-0318	TUF - Track Until Fixed
29119	WRPS-PER-2008-0319	Trend Only
29120	WRPS-PER-2008-0320	PIE/CIM
29121	WRPS-PER-2008-0321	TUF - Track Until Fixed
29122	WRPS-PER-2008-0322	Trend Only
29123	WRPS-PER-2008-0323	Trend Only
29124	WRPS-PER-2008-0324	PIE/CIM
29125	WRPS-PER-2008-0325	Trend Only
29126	WRPS-PER-2008-0326	TUF - Track Until Fixed
29127	WRPS-PER-2008-0327	TUF - Track Until Fixed
29128	WRPS-PER-2008-0328	PER with Corrective Actions
29129	WRPS-PER-2008-0329	TUF - Track Until Fixed
29130	WRPS-PER-2008-0330	Trend Only
29131	WRPS-PER-2008-0331	TUF - Track Until Fixed
29132	WRPS-PER-2008-0332	Trend Only
29133	WRPS-PER-2008-0333	PER with Corrective Actions
29134	WRPS-PER-2008-0334	TUF - Track Until Fixed
29135	WRPS-PER-2008-0335	Trend Only
29136	WRPS-PER-2008-0336	TUF - Track Until Fixed
29137	WRPS-PER-2008-0337	PER with Corrective Actions
29138	WRPS-PER-2008-0338	PER with Corrective Actions
29139	WRPS-PER-2008-0339	TUF - Track Until Fixed
29140	WRPS-PER-2008-0340	TUF - Track Until Fixed
29141	WRPS-PER-2008-0341	PIE/CIM
29142	WRPS-PER-2008-0342	PER with Corrective Actions
29143	WRPS-PER-2008-0343	PIE/CIM
29144	WRPS-PER-2008-0344	PIE/CIM
29145	WRPS-PER-2008-0345	TUF - Track Until Fixed
29146	WRPS-PER-2008-0346	Trend Only
29147	WRPS-PER-2008-0347	Trend Only
29148	WRPS-PER-2008-0348	Trend Only
29149	WRPS-PER-2008-0349	Trend Only
29150	WRPS-PER-2008-0350	TUF - Track Until Fixed
29151	WRPS-PER-2008-0351	PIE/CIM
29152	WRPS-PER-2008-0352	PIE/CIM
29153	WRPS-PER-2008-0353	Trend Only
29154	WRPS-PER-2008-0354	TUF - Track Until Fixed

29155	WRPS-PER-2008-0355	TUF - Track Until Fixed
29156	WRPS-PER-2008-0356	PIE/CIM
29157	WRPS-PER-2008-0357	TUF - Track Until Fixed
29158	WRPS-PER-2008-0358	TUF - Track Until Fixed
29159	WRPS-PER-2008-0359	TUF - Track Until Fixed
29160	WRPS-PER-2008-0360	TUF - Track Until Fixed
29161	WRPS-PER-2008-0361	TUF - Track Until Fixed
29162	WRPS-PER-2008-0362	TUF - Track Until Fixed
29163	WRPS-PER-2008-0363	PIE/CIM
29164	WRPS-PER-2008-0364	TUF - Track Until Fixed
29165	WRPS-PER-2008-0365	PIE/CIM
29166	WRPS-PER-2008-0366	TUF - Track Until Fixed
29167	WRPS-PER-2008-0367	PIE/CIM
29168	WRPS-PER-2008-0368	PIE/CIM
29169	WRPS-PER-2008-0369	PER with Corrective Actions
29170	WRPS-PER-2008-0370	PIE/CIM
29171	WRPS-PER-2008-0371	PIE/CIM
29172	WRPS-PER-2008-0372	PER with Corrective Actions
29173	WRPS-PER-2008-0373	PIE/CIM
29174	WRPS-PER-2008-0374	Trend Only
29175	WRPS-PER-2008-0375	PER with Corrective Actions
29176	WRPS-PER-2008-0376	PIE/CIM
29177	WRPS-PER-2008-0377	PIE/CIM
29178	WRPS-PER-2008-0378	Trend Only
29179	WRPS-PER-2008-0379	PIE/CIM
29180	WRPS-PER-2008-0380	PIE/CIM
29181	WRPS-PER-2008-0381	PER with Corrective Actions
29182	WRPS-PER-2008-0382	PIE/CIM
29183	WRPS-PER-2008-0383	PIE/CIM
29184	WRPS-PER-2008-0384	TUF - Track Until Fixed

29185	WRPS-PER-2008-0385	TUF - Track Until Fixed
29186	WRPS-PER-2008-0386	PER with Corrective Actions
29187	WRPS-PER-2008-0387	PIE/CIM
29188	WRPS-PER-2008-0388	PIE/CIM
29189	WRPS-PER-2008-0389	PIE/CIM
29190	WRPS-PER-2008-0390	Trend Only
29191	WRPS-PER-2008-0391	TUF - Track Until Fixed
29192	WRPS-PER-2008-0392	Trend Only
29193	WRPS-PER-2008-0393	PIE/CIM
29194	WRPS-PER-2008-0394	PIE/CIM
29195	WRPS-PER-2008-0395	TUF - Track Until Fixed
29196	WRPS-PER-2008-0396	PER with Corrective Actions
29197	WRPS-PER-2008-0397	PIE/CIM
29198	WRPS-PER-2008-0398	PIE/CIM
29199	WRPS-PER-2008-0399	Trend Only
29200	WRPS-PER-2008-0400	PIE/CIM
29201	WRPS-PER-2008-0401	PIE/CIM
29202	WRPS-PER-2008-0402	PIE/CIM
29203	WRPS-PER-2008-0403	PER with Corrective Actions
29204	WRPS-PER-2008-0404	PIE/CIM
29205	WRPS-PER-2008-0405	PIE/CIM
29206	WRPS-PER-2008-0406	PIE/CIM
29207	WRPS-PER-2008-0407	PIE/CIM
29208	WRPS-PER-2008-0408	PER with Corrective Actions
29209	WRPS-PER-2008-0409	PIE/CIM
29210	WRPS-PER-2008-0410	PIE/CIM
29211	WRPS-PER-2008-0411	TUF - Track Until Fixed
29212	WRPS-PER-2008-0412	TUF - Track Until Fixed
29213	WRPS-PER-2008-0413	TUF - Track Until Fixed
29214	WRPS-PER-2008-0414	PER with Corrective Actions
29215	WRPS-PER-2008-0415	PIE/CIM
29216	WRPS-PER-2008-0416	Trend Only
29217	WRPS-PER-2008-0417	TUF - Track Until Fixed
29218	WRPS-PER-2008-0418	Trend Only
29219	WRPS-PER-2008-0419	PIE/CIM
29220	WRPS-PER-2008-0420	TUF - Track Until Fixed
29221	WRPS-PER-2008-0421	Trend Only
29222	WRPS-PER-2008-0422	Trend Only
29223	WRPS-PER-2008-0423	PER with Corrective Actions

29224	WRPS-PER-2008-0424	PIE/CIM
29225	WRPS-PER-2008-0425	PIE/CIM
29226	WRPS-PER-2008-0426	PIE/CIM
29227	WRPS-PER-2008-0427	Trend Only
29228	WRPS-PER-2008-0428	PIE/CIM
29229	WRPS-PER-2008-0429	Trend Only
29230	WRPS-PER-2008-0430	TUF - Track Until Fixed
29231	WRPS-PER-2008-0431	PIE/CIM
29232	WRPS-PER-2008-0432	PIE/CIM
29233	WRPS-PER-2008-0433	Trend Only
29234	WRPS-PER-2008-0434	Trend Only
29235	WRPS-PER-2008-0435	Trend Only
29236	WRPS-PER-2008-0436	Trend Only
29237	WRPS-PER-2008-0437	Trend Only
29238	WRPS-PER-2008-0438	PER with Corrective Actions
29239	WRPS-PER-2008-0439	PIE/CIM
29240	WRPS-PER-2008-0440	Trend Only
29241	WRPS-PER-2008-0441	Trend Only
29242	WRPS-PER-2008-0442	PIE/CIM
29243	WRPS-PER-2008-0443	PIE/CIM
29244	WRPS-PER-2008-0444	PIE/CIM
29245	WRPS-PER-2008-0445	Trend Only
29246	WRPS-PER-2008-0446	PIE/CIM
29247	WRPS-PER-2008-0447	Trend Only
29248	WRPS-PER-2008-0448	INVALID
29249	WRPS-PER-2009-0001	TUF - Track Until Fixed
29250	WRPS-PER-2009-0002	TUF - Track Until Fixed
29251	WRPS-PER-2009-0003	Trend Only
29252	WRPS-PER-2009-0004	Trend Only
29253	WRPS-PER-2009-0005	TUF - Track Until Fixed
29254	WRPS-PER-2009-0006	Trend Only
29255	WRPS-PER-2009-0007	Trend Only
29256	WRPS-PER-2009-0008	PER with Corrective Actions
29257	WRPS-PER-2009-0009	PIE/CIM
29258	WRPS-PER-2009-0010	TUF - Track Until Fixed
29259	WRPS-PER-2009-0011	Trend Only
29260	WRPS-PER-2009-0012	PER with Corrective Actions
29261	WRPS-PER-2009-0013	INVALID
29262	WRPS-PER-2009-0014	Trend Only
29263	WRPS-PER-2009-0015	PIE/CIM
29264	WRPS-PER-2009-0016	PER with Corrective Actions
29265	WRPS-PER-2009-0017	Trend Only

29266	WRPS-PER-2009-0018	Trend Only
29267	WRPS-PER-2009-0019	Trend Only
29268	WRPS-PER-2009-0020	Trend Only
29269	WRPS-PER-2009-0021	Trend Only
29270	WRPS-PER-2009-0022	Trend Only
29271	WRPS-PER-2009-0023	PIE/CIM
29272	WRPS-PER-2009-0024	PER with Corrective Actions
29273	WRPS-PER-2009-0025	PER with Corrective Actions
29274	WRPS-PER-2009-0026	PER with Corrective Actions
29275	WRPS-PER-2009-0027	PER with Corrective Actions
29276	WRPS-PER-2009-0028	PER with Corrective Actions
29277	WRPS-PER-2009-0029	PIE/CIM
29278	WRPS-PER-2009-0030	PIE/CIM
29279	WRPS-PER-2009-0031	PIE/CIM
29280	WRPS-PER-2009-0032	PIE/CIM
29281	WRPS-PER-2009-0033	PIE/CIM
29282	WRPS-PER-2009-0034	PIE/CIM
29283	WRPS-PER-2009-0035	PIE/CIM
29284	WRPS-PER-2009-0036	PER with Corrective Actions
29285	WRPS-PER-2009-0037	TUF - Track Until Fixed
29286	WRPS-PER-2009-0038	TUF - Track Until Fixed
29287	WRPS-PER-2009-0039	PER with Corrective Actions
29288	WRPS-PER-2009-0040	PIE/CIM
29289	WRPS-PER-2009-0041	PIE/CIM
29290	WRPS-PER-2009-0042	PIE/CIM
29291	WRPS-PER-2009-0043	Trend Only
29292	WRPS-PER-2009-0044	PER with Corrective Actions
29293	WRPS-PER-2009-0045	PIE/CIM
29294	WRPS-PER-2009-0046	PER with Corrective Actions

29295	WRPS-PER-2009-0047	PER with Corrective Actions
29296	WRPS-PER-2009-0048	TUF - Track Until Fixed
29297	WRPS-PER-2009-0049	PER with Corrective Actions
29298	WRPS-PER-2009-0050	PIE/CIM
29299	WRPS-PER-2009-0051	TUF - Track Until Fixed
29300	WRPS-PER-2009-0052	TUF - Track Until Fixed
29301	WRPS-PER-2009-0053	TUF - Track Until Fixed
29302	WRPS-PER-2009-0054	TUF - Track Until Fixed
29303	WRPS-PER-2009-0055	PIE/CIM
29304	WRPS-PER-2009-0056	PIE/CIM
29305	WRPS-PER-2009-0057	INVALID
29306	WRPS-PER-2009-0058	PIE/CIM
29307	WRPS-PER-2009-0059	TUF - Track Until Fixed
29308	WRPS-PER-2009-0060	PIE/CIM
29309	WRPS-PER-2009-0061	TUF - Track Until Fixed
29310	WRPS-PER-2009-0062	Trend Only
29311	WRPS-PER-2009-0063	PIE/CIM
29312	WRPS-PER-2009-0064	PIE/CIM
29313	WRPS-PER-2009-0065	Trend Only
29314	WRPS-PER-2009-0066	Trend Only
29315	WRPS-PER-2009-0067	Trend Only
29316	WRPS-PER-2009-0068	Trend Only
29317	WRPS-PER-2009-0069	TUF - Track Until Fixed
29318	WRPS-PER-2009-0070	Trend Only
29319	WRPS-PER-2009-0071	PIE/CIM
29320	WRPS-PER-2009-0072	PER with Corrective Actions
29321	WRPS-PER-2009-0073	Trend Only
29322	WRPS-PER-2009-0074	PIE/CIM
29323	WRPS-PER-2009-0075	TUF - Track Until Fixed
29324	WRPS-PER-2009-0076	TUF - Track Until Fixed
29325	WRPS-PER-2009-0077	PIE/CIM
29326	WRPS-PER-2009-0078	PER with Corrective Actions
29327	WRPS-PER-2009-0079	PIE/CIM
29328	WRPS-PER-2009-0080	PIE/CIM
29329	WRPS-PER-2009-0081	PIE/CIM

29330	WRPS-PER-2009-0082	TUF - Track Until Fixed
29331	WRPS-PER-2009-0083	PER with Corrective Actions
29332	WRPS-PER-2009-0084	PIE/CIM
29333	WRPS-PER-2009-0085	PER with Corrective Actions
29334	WRPS-PER-2009-0086	TUF - Track Until Fixed
29335	WRPS-PER-2009-0087	PIE/CIM
29336	WRPS-PER-2009-0088	TUF - Track Until Fixed
29337	WRPS-PER-2009-0089	TUF - Track Until Fixed
29338	WRPS-PER-2009-0090	PIE/CIM
29339	WRPS-PER-2009-0091	PIE/CIM
29340	WRPS-PER-2009-0092	TUF - Track Until Fixed
29341	WRPS-PER-2009-0093	PIE/CIM
29342	WRPS-PER-2009-0094	PIE/CIM
29343	WRPS-PER-2009-0095	TUF - Track Until Fixed
29344	WRPS-PER-2009-0096	Trend Only
29345	WRPS-PER-2009-0097	PIE/CIM
29346	WRPS-PER-2009-0098	TUF - Track Until Fixed
29347	WRPS-PER-2009-0099	TUF - Track Until Fixed
29348	WRPS-PER-2009-0100	TUF - Track Until Fixed
29349	WRPS-PER-2009-0101	PER with Corrective Actions
29350	WRPS-PER-2009-0102	TUF - Track Until Fixed
29351	WRPS-PER-2009-0103	Trend Only
29352	WRPS-PER-2009-0104	TUF - Track Until Fixed
29353	WRPS-PER-2009-0105	TUF - Track Until Fixed
29354	WRPS-PER-2009-0106	PIE/CIM
29355	WRPS-PER-2009-0107	TUF - Track Until Fixed
29356	WRPS-PER-2009-0108	TUF - Track Until Fixed
29357	WRPS-PER-2009-0109	TUF - Track Until Fixed
29358	WRPS-PER-2009-0110	TUF - Track Until Fixed
29359	WRPS-PER-2009-0111	PIE/CIM
29360	WRPS-PER-2009-0112	PIE/CIM
29361	WRPS-PER-2009-0113	PIE/CIM
29362	WRPS-PER-2009-0114	PIE/CIM
29363	WRPS-PER-2009-0115	PIE/CIM
29364	WRPS-PER-2009-0116	TUF - Track Until Fixed
29365	WRPS-PER-2009-0117	TUF - Track Until Fixed
29366	WRPS-PER-2009-0118	TUF - Track Until Fixed
29367	WRPS-PER-2009-0119	TUF - Track Until Fixed

29368	WRPS-PER-2009-0120	PIE/CIM
29369	WRPS-PER-2009-0121	TUF - Track Until Fixed
29370	WRPS-PER-2009-0122	TUF - Track Until Fixed
29371	WRPS-PER-2009-0123	PIE/CIM
29372	WRPS-PER-2009-0124	TUF - Track Until Fixed
29373	WRPS-PER-2009-0125	TUF - Track Until Fixed
29374	WRPS-PER-2009-0126	TUF - Track Until Fixed
29375	WRPS-PER-2009-0127	TUF - Track Until Fixed
29376	WRPS-PER-2009-0128	Trend Only
29377	WRPS-PER-2009-0129	TUF - Track Until Fixed
29378	WRPS-PER-2009-0130	TUF - Track Until Fixed
29379	WRPS-PER-2009-0131	TUF - Track Until Fixed
29380	WRPS-PER-2009-0132	TUF - Track Until Fixed
29381	WRPS-PER-2009-0133	Trend Only
29382	WRPS-PER-2009-0134	TUF - Track Until Fixed
29383	WRPS-PER-2009-0135	PIE/CIM
29384	WRPS-PER-2009-0136	PER with Corrective Actions
29385	WRPS-PER-2009-0137	PER with Corrective Actions
29386	WRPS-PER-2009-0138	PER with Corrective Actions
29387	WRPS-PER-2009-0139	PER with Corrective Actions
29388	WRPS-PER-2009-0140	PER with Corrective Actions
29389	WRPS-PER-2009-0141	PER with Corrective Actions
29390	WRPS-PER-2009-0142	TUF - Track Until Fixed
29391	WRPS-PER-2009-0143	PIE/CIM
29392	WRPS-PER-2009-0144	PER with Corrective Actions
29393	WRPS-PER-2009-0145	PIE/CIM
29394	WRPS-PER-2009-0146	PER with Corrective Actions
29395	WRPS-PER-2009-0147	INVALID
29396	WRPS-PER-2009-0148	INVALID
29397	WRPS-PER-2009-0149	PIE/CIM
29398	WRPS-PER-2009-0150	PER with Corrective Actions
29399	WRPS-PER-2009-0151	PER with Corrective Actions
29400	WRPS-PER-2009-0152	PER with Corrective Actions
29401	WRPS-PER-2009-0153	Trend Only
29402	WRPS-PER-2009-0154	PER with Corrective Actions
29403	WRPS-PER-2009-0155	PIE/CIM
29404	WRPS-PER-2009-0156	PIE/CIM
29405	WRPS-PER-2009-0157	INVALID
29406	WRPS-PER-2009-0158	Trend Only

29407	WRPS-PER-2009-0159	PIE/CIM
29408	WRPS-PER-2009-0160	PIE/CIM
29409	WRPS-PER-2009-0161	PER with Corrective Actions
29410	WRPS-PER-2009-0162	TUF - Track Until Fixed
29411	WRPS-PER-2009-0163	PER with Corrective Actions
29412	WRPS-PER-2009-0164	PER with Corrective Actions
29413	WRPS-PER-2009-0165	PER with Corrective Actions
29414	WRPS-PER-2009-0166	PER with Corrective Actions
29415	WRPS-PER-2009-0167	TUF - Track Until Fixed
29416	WRPS-PER-2009-0168	TUF - Track Until Fixed
29417	WRPS-PER-2009-0169	PER with Corrective Actions
29418	WRPS-PER-2009-0170	Trend Only
29419	WRPS-PER-2009-0171	PER with Corrective Actions
29420	WRPS-PER-2009-0172	PER with Corrective Actions
29421	WRPS-PER-2009-0173	INVALID
29422	WRPS-PER-2009-0174	Trend Only
29423	WRPS-PER-2009-0175	TUF - Track Until Fixed
29424	WRPS-PER-2009-0176	Trend Only
29425	WRPS-PER-2009-0177	PER with Corrective Actions
29426	WRPS-PER-2009-0178	PER with Corrective Actions
29427	WRPS-PER-2009-0179	PER with Corrective Actions
29428	WRPS-PER-2009-0180	Trend Only
29429	WRPS-PER-2009-0181	Trend Only
29430	WRPS-PER-2009-0182	Trend Only
29431	WRPS-PER-2009-0183	Trend Only
29432	WRPS-PER-2009-0184	PER with Corrective Actions
29433	WRPS-PER-2009-0185	PIE/CIM
29434	WRPS-PER-2009-0186	TUF - Track Until Fixed
29435	WRPS-PER-2009-0187	PIE/CIM
29436	WRPS-PER-2009-0188	TUF - Track Until Fixed
29437	WRPS-PER-2009-0189	TUF - Track Until Fixed
29438	WRPS-PER-2009-0190	TUF - Track Until Fixed
29439	WRPS-PER-2009-0191	PER with Corrective Actions
29440	WRPS-PER-2009-0192	PER with Corrective Actions
29441	WRPS-PER-2009-0193	TUF - Track Until Fixed
29442	WRPS-PER-2009-0194	Trend Only

29443	WRPS-PER-2009-0195	PER with Corrective Actions
29444	WRPS-PER-2009-0196	PER with Corrective Actions
29445	WRPS-PER-2009-0197	TUF - Track Until Fixed
29446	WRPS-PER-2009-0198	TUF - Track Until Fixed
29447	WRPS-PER-2009-0199	TUF - Track Until Fixed
29448	WRPS-PER-2009-0200	TUF - Track Until Fixed
29449	WRPS-PER-2009-0201	PIE/CIM
29450	WRPS-PER-2009-0202	Trend Only
29451	WRPS-PER-2009-0203	Trend Only
29452	WRPS-PER-2009-0204	TUF - Track Until Fixed
29453	WRPS-PER-2009-0205	PER with Corrective Actions
29454	WRPS-PER-2009-0206	TUF - Track Until Fixed
29455	WRPS-PER-2009-0207	PIE/CIM
29456	WRPS-PER-2009-0208	TUF - Track Until Fixed
29457	WRPS-PER-2009-0209	TUF - Track Until Fixed
29458	WRPS-PER-2009-0210	Trend Only
29459	WRPS-PER-2009-0211	Trend Only
29460	WRPS-PER-2009-0212	PIE/CIM
29461	WRPS-PER-2009-0213	PER with Corrective Actions
29462	WRPS-PER-2009-0214	PER with Corrective Actions
29463	WRPS-PER-2009-0215	INVALID
29464	WRPS-PER-2009-0216	INVALID
29465	WRPS-PER-2009-0217	TUF - Track Until Fixed
29466	WRPS-PER-2009-0218	TUF - Track Until Fixed
29467	WRPS-PER-2009-0219	PER with Corrective Actions
29468	WRPS-PER-2009-0220	TUF - Track Until Fixed
29469	WRPS-PER-2009-0221	PER with Corrective Actions
29470	WRPS-PER-2009-0222	PIE/CIM
29471	WRPS-PER-2009-0223	Trend Only
29472	WRPS-PER-2009-0224	PIE/CIM
29473	WRPS-PER-2009-0225	Trend Only
29474	WRPS-PER-2009-0226	Trend Only
29475	WRPS-PER-2009-0227	Trend Only
29476	WRPS-PER-2009-0228	Trend Only
29477	WRPS-PER-2009-0229	Trend Only
29478	WRPS-PER-2009-0230	Trend Only

29479	WRPS-PER-2009-0231	Trend Only
29480	WRPS-PER-2009-0232	INVALID
29481	WRPS-PER-2009-0233	TUF - Track Until Fixed
29482	WRPS-PER-2009-0234	PIE/CIM
29483	WRPS-PER-2009-0235	PER with Corrective Actions
29484	WRPS-PER-2009-0236	PIE/CIM
29485	WRPS-PER-2009-0237	Trend Only
29486	WRPS-PER-2009-0238	TUF - Track Until Fixed
29487	WRPS-PER-2009-0239	TUF - Track Until Fixed
29488	WRPS-PER-2009-0240	TUF - Track Until Fixed
29489	WRPS-PER-2009-0241	TUF - Track Until Fixed
29490	WRPS-PER-2009-0242	TUF - Track Until Fixed
29491	WRPS-PER-2009-0243	TUF - Track Until Fixed
29492	WRPS-PER-2009-0244	PER with Corrective Actions
29493	WRPS-PER-2009-0245	PIE/CIM
29494	WRPS-PER-2009-0246	PER with Corrective Actions
29495	WRPS-PER-2009-0247	INVALID
29496	WRPS-PER-2009-0248	PER with Corrective Actions
29497	WRPS-PER-2009-0249	TUF - Track Until Fixed
29498	WRPS-PER-2009-0250	PIE/CIM
29499	WRPS-PER-2009-0251	INVALID
29500	WRPS-PER-2009-0252	TUF - Track Until Fixed
29501	WRPS-PER-2009-0253	TUF - Track Until Fixed
29502	WRPS-PER-2009-0254	PIE/CIM
29503	WRPS-PER-2009-0255	PER with Corrective Actions
29504	WRPS-PER-2009-0256	Trend Only
29505	WRPS-PER-2009-0257	Trend Only
29506	WRPS-PER-2009-0258	INVALID
29507	WRPS-PER-2009-0259	TUF - Track Until Fixed
29508	WRPS-PER-2009-0260	PIE/CIM
29509	WRPS-PER-2009-0261	TUF - Track Until Fixed
29510	WRPS-PER-2009-0262	Trend Only
29511	WRPS-PER-2009-0263	TUF - Track Until Fixed
29512	WRPS-PER-2009-0264	TUF - Track Until Fixed
29513	WRPS-PER-2009-0265	Trend Only
29514	WRPS-PER-2009-0266	PER with Corrective Actions
29515	WRPS-PER-2009-0267	Trend Only
29516	WRPS-PER-2009-0268	PER with Corrective Actions
29517	WRPS-PER-2009-0269	PER with Corrective Actions

29518	WRPS-PER-2009-0270	INVALID
29519	WRPS-PER-2009-0271	PIE/CIM
29520	WRPS-PER-2009-0272	Trend Only
29521	WRPS-PER-2009-0273	Trend Only
29522	WRPS-PER-2009-0274	PER with Corrective Actions
29523	WRPS-PER-2009-0275	PIE/CIM
29524	WRPS-PER-2009-0276	PER with Corrective Actions
29525	WRPS-PER-2009-0277	PER with Corrective Actions
29526	WRPS-PER-2009-0278	PIE/CIM
29527	WRPS-PER-2009-0279	TUF - Track Until Fixed
29528	WRPS-PER-2009-0280	TUF - Track Until Fixed
29529	WRPS-PER-2009-0281	TUF - Track Until Fixed
29530	WRPS-PER-2009-0282	PER with Corrective Actions
29531	WRPS-PER-2009-0283	PIE/CIM
29532	WRPS-PER-2009-0284	TUF - Track Until Fixed
29533	WRPS-PER-2009-0285	PIE/CIM
29534	WRPS-PER-2009-0286	TUF - Track Until Fixed
29535	WRPS-PER-2009-0287	TUF - Track Until Fixed
29536	WRPS-PER-2009-0288	PIE/CIM
29537	WRPS-PER-2009-0289	PIE/CIM
29538	WRPS-PER-2009-0290	TUF - Track Until Fixed
29539	WRPS-PER-2009-0291	PIE/CIM
29540	WRPS-PER-2009-0292	Trend Only
29541	WRPS-PER-2009-0293	TUF - Track Until Fixed
29542	WRPS-PER-2009-0294	TUF - Track Until Fixed
29543	WRPS-PER-2009-0295	PIE/CIM
29544	WRPS-PER-2009-0296	TUF - Track Until Fixed
29545	WRPS-PER-2009-0297	TUF - Track Until Fixed
29546	WRPS-PER-2009-0298	TUF - Track Until Fixed
29547	WRPS-PER-2009-0299	TUF - Track Until Fixed
29548	WRPS-PER-2009-0300	TUF - Track Until Fixed
29549	WRPS-PER-2009-0301	TUF - Track Until Fixed
29550	WRPS-PER-2009-0302	PIE/CIM
29551	WRPS-PER-2009-0303	PER with Corrective Actions
29552	WRPS-PER-2009-0304	TUF - Track Until Fixed
29553	WRPS-PER-2009-0305	PIE/CIM
29554	WRPS-PER-2009-0306	PIE/CIM
29555	WRPS-PER-2009-0307	PER with Corrective Actions
29556	WRPS-PER-2009-0308	Trend Only
29557	WRPS-PER-2009-0309	Trend Only
29558	WRPS-PER-2009-0310	TUF - Track Until Fixed
29559	WRPS-PER-2009-0311	PIE/CIM
29560	WRPS-PER-2009-0312	TUF - Track Until Fixed
29561	WRPS-PER-2009-0313	Trend Only
29562	WRPS-PER-2009-0314	PIE/CIM
29563	WRPS-PER-2009-0315	PIE/CIM
29564	WRPS-PER-2009-0316	PIE/CIM

29565	WRPS-PER-2009-0317	TUF - Track Until Fixed
29566	WRPS-PER-2009-0318	PIE/CIM
29567	WRPS-PER-2009-0319	PIE/CIM
29568	WRPS-PER-2009-0320	PER with Corrective Actions
29569	WRPS-PER-2009-0321	PIE/CIM
29570	WRPS-PER-2009-0322	Trend Only
29571	WRPS-PER-2009-0323	TUF - Track Until Fixed
29572	WRPS-PER-2009-0324	PIE/CIM
29573	WRPS-PER-2009-0325	Trend Only
29574	WRPS-PER-2009-0326	Trend Only
29575	WRPS-PER-2009-0327	Trend Only
29576	WRPS-PER-2009-0328	PER with Corrective Actions
29577	WRPS-PER-2009-0329	PIE/CIM
29578	WRPS-PER-2009-0330	PIE/CIM
29579	WRPS-PER-2009-0331	Further Evaluation
29580	WRPS-PER-2009-0332	Trend Only
29581	WRPS-PER-2009-0333	Trend Only
29582	WRPS-PER-2009-0334	TUF - Track Until Fixed
29583	WRPS-PER-2009-0335	TUF - Track Until Fixed
29584	WRPS-PER-2009-0336	TUF - Track Until Fixed
29585	WRPS-PER-2009-0337	INVALID
29586	WRPS-PER-2009-0338	PER with Corrective Actions
29587	WRPS-PER-2009-0339	PIE/CIM
29588	WRPS-PER-2009-0340	TUF - Track Until Fixed
29589	WRPS-PER-2009-0341	INVALID
29590	WRPS-PER-2009-0342	TUF - Track Until Fixed
29591	WRPS-PER-2009-0343	PER with Corrective Actions
29592	WRPS-PER-2009-0344	PER with Corrective Actions
29593	WRPS-PER-2009-0345	PIE/CIM
29594	WRPS-PER-2009-0346	Trend Only
29595	WRPS-PER-2009-0347	PIE/CIM
29596	WRPS-PER-2009-0348	PER with Corrective Actions
29597	WRPS-PER-2009-0349	PIE/CIM
29598	WRPS-PER-2009-0350	PIE/CIM
29599	WRPS-PER-2009-0351	PER with Corrective Actions
29600	WRPS-PER-2009-0352	PER with Corrective Actions
29601	WRPS-PER-2009-0353	PIE/CIM
29602	WRPS-PER-2009-0354	Trend Only
29603	WRPS-PER-2009-0355	PIE/CIM
29604	WRPS-PER-2009-0356	PER with Corrective Actions
29605	WRPS-PER-2009-0357	PIE/CIM
29606	WRPS-PER-2009-0358	TUF - Track Until Fixed

29607	WRPS-PER-2009-0359	TUF - Track Until Fixed
29608	WRPS-PER-2009-0360	TUF - Track Until Fixed
29609	WRPS-PER-2009-0361	PER with Corrective Actions
29610	WRPS-PER-2009-0362	PER with Corrective Actions
29611	WRPS-PER-2009-0363	PIE/CIM
29612	WRPS-PER-2009-0364	PIE/CIM
29613	WRPS-PER-2009-0365	Trend Only
29614	WRPS-PER-2009-0366	Trend Only
29615	WRPS-PER-2009-0367	INVALID
29616	WRPS-PER-2009-0368	PIE/CIM
29617	WRPS-PER-2009-0369	Trend Only
29618	WRPS-PER-2009-0370	TUF - Track Until Fixed
29619	WRPS-PER-2009-0371	PIE/CIM
29620	WRPS-PER-2009-0372	PIE/CIM
29621	WRPS-PER-2009-0373	TUF - Track Until Fixed
29622	WRPS-PER-2009-0374	Trend Only
29623	WRPS-PER-2009-0375	Trend Only
29624	WRPS-PER-2009-0376	Trend Only
29625	WRPS-PER-2009-0377	Trend Only
29626	WRPS-PER-2009-0378	Trend Only
29627	WRPS-PER-2009-0379	Trend Only
29628	WRPS-PER-2009-0380	INVALID
29629	WRPS-PER-2009-0381	TUF - Track Until Fixed
29630	WRPS-PER-2009-0382	PER with Corrective Actions
29631	WRPS-PER-2009-0383	PIE/CIM
29632	WRPS-PER-2009-0384	PIE/CIM
29633	WRPS-PER-2009-0385	Significant - Significant PER with Corrective
29634	WRPS-PER-2009-0386	PIE/CIM
29635	WRPS-PER-2009-0387	PER with Corrective Actions
29636	WRPS-PER-2009-0388	TUF - Track Until Fixed
29637	WRPS-PER-2009-0389	PIE/CIM
29638	WRPS-PER-2009-0390	PIE/CIM
29639	WRPS-PER-2009-0391	PER with Corrective Actions
29640	WRPS-PER-2009-0392	PIE/CIM
29641	WRPS-PER-2009-0393	PER with Corrective Actions

29642	WRPS-PER-2009-0394	TUF - Track Until Fixed
29643	WRPS-PER-2009-0395	PIE/CIM
29644	WRPS-PER-2009-0396	TUF - Track Until Fixed
29645	WRPS-PER-2009-0397	Trend Only
29646	WRPS-PER-2009-0398	PIE/CIM
29647	WRPS-PER-2009-0399	Trend Only
29648	WRPS-PER-2009-0400	TUF - Track Until Fixed
29649	WRPS-PER-2009-0401	Trend Only
29650	WRPS-PER-2009-0402	TUF - Track Until Fixed
29651	WRPS-PER-2009-0403	TUF - Track Until Fixed
29652	WRPS-PER-2009-0404	TUF - Track Until Fixed
29653	WRPS-PER-2009-0405	TUF - Track Until Fixed
29654	WRPS-PER-2009-0406	TUF - Track Until Fixed
29655	WRPS-PER-2009-0407	TUF - Track Until Fixed
29656	WRPS-PER-2009-0408	PER with Corrective Actions
29657	WRPS-PER-2009-0409	TUF - Track Until Fixed
29658	WRPS-PER-2009-0410	PER with Corrective Actions
29659	WRPS-PER-2009-0411	PER with Corrective Actions
29660	WRPS-PER-2009-0412	TUF - Track Until Fixed
29661	WRPS-PER-2009-0413	TUF - Track Until Fixed
29662	WRPS-PER-2009-0414	TUF - Track Until Fixed
29663	WRPS-PER-2009-0415	PIE/CIM
29664	WRPS-PER-2009-0416	TUF - Track Until Fixed
29665	WRPS-PER-2009-0417	PER with Corrective Actions
29666	WRPS-PER-2009-0418	TUF - Track Until Fixed
29667	WRPS-PER-2009-0419	Trend Only
29668	WRPS-PER-2009-0420	TUF - Track Until Fixed
29669	WRPS-PER-2009-0421	Trend Only
29670	WRPS-PER-2009-0422	TUF - Track Until Fixed
29671	WRPS-PER-2009-0423	Trend Only
29672	WRPS-PER-2009-0424	PER with Corrective Actions
29673	WRPS-PER-2009-0425	Trend Only
29674	WRPS-PER-2009-0426	Trend Only
29675	WRPS-PER-2009-0427	TUF - Track Until Fixed
29676	WRPS-PER-2009-0428	Trend Only
29677	WRPS-PER-2009-0429	TUF - Track Until Fixed
29678	WRPS-PER-2009-0430	PER with Corrective Actions
29679	WRPS-PER-2009-0431	PIE/CIM
29680	WRPS-PER-2009-0432	PIE/CIM
29681	WRPS-PER-2009-0433	PIE/CIM
29682	WRPS-PER-2009-0434	PIE/CIM
29683	WRPS-PER-2009-0435	TUF - Track Until Fixed
29684	WRPS-PER-2009-0436	TUF - Track Until Fixed
29685	WRPS-PER-2009-0437	PER with Corrective Actions

29686	WRPS-PER-2009-0438	TUF - Track Until Fixed
29687	WRPS-PER-2009-0439	PIE/CIM
29688	WRPS-PER-2009-0440	PIE/CIM
29689	WRPS-PER-2009-0441	TUF - Track Until Fixed
29690	WRPS-PER-2009-0442	TUF - Track Until Fixed
29691	WRPS-PER-2009-0443	TUF - Track Until Fixed
29692	WRPS-PER-2009-0444	PER with Corrective Actions
29693	WRPS-PER-2009-0445	PER with Corrective Actions
29694	WRPS-PER-2009-0446	TUF - Track Until Fixed
29695	WRPS-PER-2009-0447	TUF - Track Until Fixed
29696	WRPS-PER-2009-0448	PER with Corrective Actions
29697	WRPS-PER-2009-0449	PIE/CIM
29698	WRPS-PER-2009-0450	PIE/CIM
29699	WRPS-PER-2009-0451	Trend Only
29700	WRPS-PER-2009-0452	PIE/CIM
29701	WRPS-PER-2009-0453	Trend Only
29702	WRPS-PER-2009-0454	Trend Only
29703	WRPS-PER-2009-0455	Trend Only
29704	WRPS-PER-2009-0456	Trend Only
29705	WRPS-PER-2009-0457	Trend Only
29706	WRPS-PER-2009-0458	Trend Only
29707	WRPS-PER-2009-0459	Trend Only
29708	WRPS-PER-2009-0460	Trend Only
29709	WRPS-PER-2009-0461	Trend Only
29710	WRPS-PER-2009-0462	Trend Only
29711	WRPS-PER-2009-0463	Trend Only
29712	WRPS-PER-2009-0464	TUF - Track Until Fixed
29713	WRPS-PER-2009-0465	TUF - Track Until Fixed
29714	WRPS-PER-2009-0466	PIE/CIM
29715	WRPS-PER-2009-0467	PIE/CIM
29716	WRPS-PER-2009-0468	Trend Only
29717	WRPS-PER-2009-0469	PIE/CIM
29718	WRPS-PER-2009-0470	PIE/CIM
29719	WRPS-PER-2009-0471	PER with Corrective Actions
29720	WRPS-PER-2009-0472	PER with Corrective Actions
29721	WRPS-PER-2009-0473	PER with Corrective Actions

29722	WRPS-PER-2009-0474	PER with Corrective Actions
29723	WRPS-PER-2009-0475	PER with Corrective Actions
29724	WRPS-PER-2009-0476	PER with Corrective Actions
29725	WRPS-PER-2009-0477	PER with Corrective Actions
29726	WRPS-PER-2009-0478	PIE/CIM
29727	WRPS-PER-2009-0479	PIE/CIM
29728	WRPS-PER-2009-0480	PIE/CIM
29729	WRPS-PER-2009-0481	PIE/CIM
29730	WRPS-PER-2009-0482	TUF - Track Until Fixed
29731	WRPS-PER-2009-0483	PIE/CIM
29732	WRPS-PER-2009-0484	PIE/CIM
29733	WRPS-PER-2009-0485	PIE/CIM
29734	WRPS-PER-2009-0486	PIE/CIM
29735	WRPS-PER-2009-0487	PIE/CIM
29736	WRPS-PER-2009-0488	PIE/CIM
29737	WRPS-PER-2009-0489	PIE/CIM
29738	WRPS-PER-2009-0490	PIE/CIM
29739	WRPS-PER-2009-0491	PIE/CIM
29740	WRPS-PER-2009-0492	TUF - Track Until Fixed
29741	WRPS-PER-2009-0493	PIE/CIM
29742	WRPS-PER-2009-0494	PIE/CIM
29743	WRPS-PER-2009-0495	TUF - Track Until Fixed
29744	WRPS-PER-2009-0496	TUF - Track Until Fixed
29745	WRPS-PER-2009-0497	PER with Corrective Actions
29746	WRPS-PER-2009-0498	TUF - Track Until Fixed

29747	WRPS-PER-2009-0499	PER with Corrective Actions
29748	WRPS-PER-2009-0500	TUF - Track Until Fixed
29749	WRPS-PER-2009-0501	Trend Only
29750	WRPS-PER-2009-0502	TUF - Track Until Fixed
29751	WRPS-PER-2009-0503	Trend Only
29752	WRPS-PER-2009-0504	Trend Only
29753	WRPS-PER-2009-0505	TUF - Track Until Fixed
29754	WRPS-PER-2009-0506	TUF - Track Until Fixed
29755	WRPS-PER-2009-0507	TUF - Track Until Fixed
29756	WRPS-PER-2009-0508	TUF - Track Until Fixed
29757	WRPS-PER-2009-0509	TUF - Track Until Fixed
29758	WRPS-PER-2009-0510	PIE/CIM
29759	WRPS-PER-2009-0511	PIE/CIM
29760	WRPS-PER-2009-0512	Trend Only
29761	WRPS-PER-2009-0513	PER with Corrective Actions
29762	WRPS-PER-2009-0514	PIE/CIM
29763	WRPS-PER-2009-0515	PIE/CIM
29764	WRPS-PER-2009-0516	PIE/CIM
29765	WRPS-PER-2009-0517	Trend Only
29766	WRPS-PER-2009-0518	PIE/CIM
29767	WRPS-PER-2009-0519	PER with Corrective Actions
29768	WRPS-PER-2009-0520	PER with Corrective Actions
29769	WRPS-PER-2009-0521	TUF - Track Until Fixed
29770	WRPS-PER-2009-0522	PIE/CIM
29771	WRPS-PER-2009-0523	PIE/CIM
29772	WRPS-PER-2009-0524	PIE/CIM
29773	WRPS-PER-2009-0525	PIE/CIM
29774	WRPS-PER-2009-0526	PIE/CIM
29775	WRPS-PER-2009-0527	TUF - Track Until Fixed
29776	WRPS-PER-2009-0528	TUF - Track Until Fixed
29777	WRPS-PER-2009-0529	TUF - Track Until Fixed
29778	WRPS-PER-2009-0530	PIE/CIM
29779	WRPS-PER-2009-0531	PIE/CIM
29780	WRPS-PER-2009-0532	Trend Only
29781	WRPS-PER-2009-0533	TUF - Track Until Fixed
29782	WRPS-PER-2009-0534	TUF - Track Until Fixed

29783	WRPS-PER-2009-0535	Trend Only
29784	WRPS-PER-2009-0536	PER with Corrective Actions
29785	WRPS-PER-2009-0537	PIE/CIM
29786	WRPS-PER-2009-0538	Trend Only
29787	WRPS-PER-2009-0539	PER with Corrective Actions
29788	WRPS-PER-2009-0540	PIE/CIM
29789	WRPS-PER-2009-0541	TUF - Track Until Fixed
29790	WRPS-PER-2009-0542	PIE/CIM
29791	WRPS-PER-2009-0543	PER with Corrective Actions
29792	WRPS-PER-2009-0544	PER with Corrective Actions
29793	WRPS-PER-2009-0545	PIE/CIM
29794	WRPS-PER-2009-0546	TUF - Track Until Fixed
29795	WRPS-PER-2009-0547	TUF - Track Until Fixed
29796	WRPS-PER-2009-0548	TUF - Track Until Fixed
29797	WRPS-PER-2009-0549	TUF - Track Until Fixed
29798	WRPS-PER-2009-0550	TUF - Track Until Fixed
29799	WRPS-PER-2009-0551	TUF - Track Until Fixed
29800	WRPS-PER-2009-0552	TUF - Track Until Fixed
29803	WRPS-PER-2009-0555	TUF - TRACK UNTIL FIXED
29804	WRPS-PER-2009-0556	TUF - TRACK UNTIL FIXED
29805	WRPS-PER-2009-0557	TUF - TRACK UNTIL FIXED
29806	WRPS-PER-2009-0558	TUF - TRACK UNTIL FIXED
29807	WRPS-PER-2009-0559	PER with Corrective Actions
29808	WRPS-PER-2009-0560	PIE/CIM
29809	WRPS-PER-2009-0561	PIE/CIM
29810	WRPS-PER-2009-0562	PIE/CIM
29811	WRPS-PER-2009-0563	TUF - TRACK UNTIL FIXED
29812	WRPS-PER-2009-0564	PIE/CIM
29813	WRPS-PER-2009-0565	PER with Corrective Actions
29814	WRPS-PER-2009-0566	PER with Corrective Actions
29815	WRPS-PER-2009-0567	PER with Corrective Actions

29816	WRPS-PER-2009-0568	PIE/CIM
29817	WRPS-PER-2009-0569	PIE/CIM
29818	WRPS-PER-2009-0570	PIE/CIM
29819	WRPS-PER-2009-0571	PIE/CIM
29820	WRPS-PER-2009-0572	PIE/CIM
29821	WRPS-PER-2009-0573	PIE/CIM
29822	WRPS-PER-2009-0574	TUF - TRACK UNTIL FIXED
29823	WRPS-PER-2009-0575	PIE/CIM
29824	WRPS-PER-2009-0576	INVALID
29825	WRPS-PER-2009-0577	Trend Only
29826	WRPS-PER-2009-0578	PER with Corrective Actions
29827	WRPS-PER-2009-0579	PIE/CIM
29828	WRPS-PER-2009-0580	PER with Corrective Actions
29829	WRPS-PER-2009-0581	TUF - TRACK UNTIL FIXED
29830	WRPS-PER-2009-0582	TUF - TRACK UNTIL FIXED
29831	WRPS-PER-2009-0583	Trend Only
29832	WRPS-PER-2009-0584	PER with Corrective Actions
29833	WRPS-PER-2009-0585	PER with Corrective Actions
29834	WRPS-PER-2009-0586	PIE/CIM
29835	WRPS-PER-2009-0587	PIE/CIM
29836	WRPS-PER-2009-0588	PIE/CIM
29837	WRPS-PER-2009-0589	TUF - TRACK UNTIL FIXED
29838	WRPS-PER-2009-0590	TUF - TRACK UNTIL FIXED
29839	WRPS-PER-2009-0591	TUF - TRACK UNTIL FIXED
29840	WRPS-PER-2009-0592	TUF - TRACK UNTIL FIXED
29841	WRPS-PER-2009-0593	PIE/CIM
29842	WRPS-PER-2009-0594	Trend Only
29843	WRPS-PER-2009-0595	PIE/CIM
29844	WRPS-PER-2009-0596	PIE/CIM
29845	WRPS-PER-2009-0597	TUF - TRACK UNTIL FIXED
29846	WRPS-PER-2009-0598	Trend Only
29847	WRPS-PER-2009-0599	PIE/CIM

29848	WRPS-PER-2009-0600	Trend Only
29849	WRPS-PER-2009-0601	Trend Only
29850	WRPS-PER-2009-0602	Trend Only
29851	WRPS-PER-2009-0603	Trend Only
29852	WRPS-PER-2009-0604	Trend Only
29853	WRPS-PER-2009-0605	Trend Only
29854	WRPS-PER-2009-0606	Trend Only
29855	WRPS-PER-2009-0607	Trend Only
29856	WRPS-PER-2009-0608	PER with Corrective Actions
29857	WRPS-PER-2009-0609	Trend Only
29858	WRPS-PER-2009-0610	Trend Only
29859	WRPS-PER-2009-0611	TUF - TRACK UNTIL FIXED
29860	WRPS-PER-2009-0612	Trend Only
29861	WRPS-PER-2009-0613	PIE/CIM
29862	WRPS-PER-2009-0614	PIE/CIM
29863	WRPS-PER-2009-0615	PIE/CIM
29864	WRPS-PER-2009-0616	Trend Only
29865	WRPS-PER-2009-0617	PER with Corrective Actions
29866	WRPS-PER-2009-0618	Trend Only
29867	WRPS-PER-2009-0619	TUF - TRACK UNTIL FIXED
29868	WRPS-PER-2009-0620	PIE/CIM
29869	WRPS-PER-2009-0621	TUF - TRACK UNTIL FIXED
29870	WRPS-PER-2009-0622	Trend Only
29871	WRPS-PER-2009-0623	TUF - TRACK UNTIL FIXED
29872	WRPS-PER-2009-0624	PIE/CIM
29873	WRPS-PER-2009-0625	PIE/CIM
29874	WRPS-PER-2009-0626	TUF - TRACK UNTIL FIXED
29875	WRPS-PER-2009-0627	TUF - TRACK UNTIL FIXED
29876	WRPS-PER-2009-0628	PER with Corrective Actions
29877	WRPS-PER-2009-0629	TUF - TRACK UNTIL FIXED
29878	WRPS-PER-2009-0630	TUF - TRACK UNTIL FIXED
29879	WRPS-PER-2009-0631	Trend Only
29880	WRPS-PER-2009-0632	Trend Only
29881	WRPS-PER-2009-0633	TUF - TRACK UNTIL FIXED
29882	WRPS-PER-2009-0634	TUF - TRACK UNTIL FIXED
29883	WRPS-PER-2009-0635	PIE/CIM
29884	WRPS-PER-2009-0636	Trend Only
29885	WRPS-PER-2009-0637	PER with Corrective Actions
29886	WRPS-PER-2009-0638	PIE/CIM
29887	WRPS-PER-2009-0639	PIE/CIM
29888	WRPS-PER-2009-0640	PER with Corrective Actions
29889	WRPS-PER-2009-0641	PER with Corrective Actions
29890	WRPS-PER-2009-0642	TUF - TRACK UNTIL FIXED

29891	WRPS-PER-2009-0643	PER with Corrective Actions
29892	WRPS-PER-2009-0644	PER with Corrective Actions
29893	WRPS-PER-2009-0645	PIE/CIM
29894	WRPS-PER-2009-0646	PIE/CIM
29895	WRPS-PER-2009-0647	PIE/CIM
29896	WRPS-PER-2009-0648	TUF - TRACK UNTIL FIXED
29897	WRPS-PER-2009-0649	PER with Corrective Actions
29898	WRPS-PER-2009-0650	PER with Corrective Actions
29899	WRPS-PER-2009-0651	PIE/CIM
29900	WRPS-PER-2009-0652	PIE/CIM
29901	WRPS-PER-2009-0653	Trend Only
29902	WRPS-PER-2009-0654	PIE/CIM
29903	WRPS-PER-2009-0655	Trend Only
29904	WRPS-PER-2009-0656	TUF - TRACK UNTIL FIXED
29905	WRPS-PER-2009-0657	Trend Only
29906	WRPS-PER-2009-0658	PIE/CIM
29907	WRPS-PER-2009-0659	PIE/CIM
29908	WRPS-PER-2009-0660	PIE/CIM
29909	WRPS-PER-2009-0661	PER with Corrective Actions
29910	WRPS-PER-2009-0662	PIE/CIM
29911	WRPS-PER-2009-0663	TUF - TRACK UNTIL FIXED
29912	WRPS-PER-2009-0664	TUF - TRACK UNTIL FIXED
29913	WRPS-PER-2009-0665	PER with Corrective Actions
29914	WRPS-PER-2009-0666	PIE/CIM
29915	WRPS-PER-2009-0667	PIE/CIM
29916	WRPS-PER-2009-0669	PIE/CIM
29917	WRPS-PER-2009-0670	TUF - TRACK UNTIL FIXED
29918	WRPS-PER-2009-0671	PIE/CIM
29919	WRPS-PER-2009-0672	PIE/CIM
29920	WRPS-PER-2009-0673	INVALID
29921	WRPS-PER-2009-0674	PIE/CIM
29922	WRPS-PER-2009-0675	PIE/CIM
29923	WRPS-PER-2009-0676	PIE/CIM
29924	WRPS-PER-2009-0677	PIE/CIM

29925	WRPS-PER-2009-0678	TUF - TRACK UNTIL FIXED
29926	WRPS-PER-2009-0679	PIE/CIM
29927	WRPS-PER-2009-0680	PIE/CIM
29928	WRPS-PER-2009-0681	PIE/CIM
29929	WRPS-PER-2009-0682	PIE/CIM
29930	WRPS-PER-2009-0683	PIE/CIM
29931	WRPS-PER-2009-0684	PIE/CIM
29932	WRPS-PER-2009-0685	Trend Only
29933	WRPS-PER-2009-0686	TUF - TRACK UNTIL FIXED
29934	WRPS-PER-2009-0687	PIE/CIM
29935	WRPS-PER-2009-0689	TUF - TRACK UNTIL FIXED
29936	WRPS-PER-2009-0690	TUF - TRACK UNTIL FIXED
29937	WRPS-PER-2009-0691	PER with Corrective Actions
29938	WRPS-PER-2009-0692	PIE/CIM
29939	WRPS-PER-2009-0693	PIE/CIM
29940	WRPS-PER-2009-0694	PIE/CIM
29941	WRPS-PER-2009-0695	TUF - TRACK UNTIL FIXED
29942	WRPS-PER-2009-0696	PIE/CIM
29943	WRPS-PER-2009-0697	TUF - TRACK UNTIL FIXED
29944	WRPS-PER-2009-0698	TUF - TRACK UNTIL FIXED
29945	WRPS-PER-2009-0699	Trend Only
29946	WRPS-PER-2009-0700	TUF - TRACK UNTIL FIXED
29947	WRPS-PER-2009-0701	PIE/CIM
29948	WRPS-PER-2009-0702	Trend Only
29949	WRPS-PER-2009-0703	PIE/CIM
29950	WRPS-PER-2009-0704	TUF - TRACK UNTIL FIXED
29951	WRPS-PER-2009-0705	PIE/CIM
29952	WRPS-PER-2009-0706	PER with Corrective Actions
29953	WRPS-PER-2009-0707	TUF - TRACK UNTIL FIXED
29954	WRPS-PER-2009-0708	TUF - TRACK UNTIL FIXED
29955	WRPS-PER-2009-0709	TUF - TRACK UNTIL FIXED
29956	WRPS-PER-2009-0710	TUF - TRACK UNTIL FIXED
29957	WRPS-PER-2009-0711	PIE/CIM
29958	WRPS-PER-2009-0712	TUF - TRACK UNTIL FIXED
29959	WRPS-PER-2009-0713	TUF - TRACK UNTIL FIXED
29960	WRPS-PER-2009-0714	PIE/CIM
29961	WRPS-PER-2009-0715	PIE/CIM
29962	WRPS-PER-2009-0716	PIE/CIM
29963	WRPS-PER-2009-0717	PIE/CIM

29964	WRPS-PER-2009-0718	TUF - TRACK UNTIL FIXED
29965	WRPS-PER-2009-0719	INVALID
29966	WRPS-PER-2009-0720	TUF - TRACK UNTIL FIXED
29967	WRPS-PER-2009-0721	Trend Only
29968	WRPS-PER-2009-0722	TUF - TRACK UNTIL FIXED
29969	WRPS-PER-2009-0723	TUF - TRACK UNTIL FIXED
29970	WRPS-PER-2009-0724	PER with Corrective Actions
29971	WRPS-PER-2009-0725	PIE/CIM
29972	WRPS-PER-2009-0726	Trend Only
29973	WRPS-PER-2009-0727	PIE/CIM
29974	WRPS-PER-2009-0728	Trend Only
29975	WRPS-PER-2009-0729	Trend Only
29976	WRPS-PER-2009-0730	PIE/CIM
29977	WRPS-PER-2009-0731	Trend Only
29978	WRPS-PER-2009-0732	PIE/CIM
29979	WRPS-PER-2009-0733	PIE/CIM
29980	WRPS-PER-2009-0734	TUF - TRACK UNTIL FIXED
29981	WRPS-PER-2009-0735	PER with Corrective Actions
29982	WRPS-PER-2009-0736	PER with Corrective Actions
29983	WRPS-PER-2009-0737	PIE/CIM
29984	WRPS-PER-2009-0738	PIE/CIM
29985	WRPS-PER-2009-0739	PIE/CIM
29986	WRPS-PER-2009-0740	Trend Only
29987	WRPS-PER-2009-0741	INVALID
29988	WRPS-PER-2009-0742	TUF - TRACK UNTIL FIXED
29989	WRPS-PER-2009-0743	PIE/CIM
29990	WRPS-PER-2009-0744	PIE/CIM
29991	WRPS-PER-2009-0745	PIE/CIM
29992	WRPS-PER-2009-0746	PER with Corrective Actions
29993	WRPS-PER-2009-0747	PER with Corrective Actions
29994	WRPS-PER-2009-0748	Trend Only
29995	WRPS-PER-2009-0749	TUF - TRACK UNTIL FIXED
29996	WRPS-PER-2009-0750	PIE/CIM
29997	WRPS-PER-2009-0751	TUF - TRACK UNTIL FIXED
29998	WRPS-PER-2009-0752	TUF - TRACK UNTIL FIXED
29999	WRPS-PER-2009-0753	TUF - TRACK UNTIL FIXED
30000	WRPS-PER-2009-0754	TUF - TRACK UNTIL FIXED
30001	WRPS-PER-2009-0755	Trend Only

30002	WRPS-PER-2009-0756	TUF - TRACK UNTIL FIXED
30003	WRPS-PER-2009-0757	PIE/CIM
30004	WRPS-PER-2009-0758	PIE/CIM
30005	WRPS-PER-2009-0759	PER with Corrective Actions
30006	WRPS-PER-2009-0760	PIE/CIM
30007	WRPS-PER-2009-0761	TUF - TRACK UNTIL FIXED
30008	WRPS-PER-2009-0762	Trend Only
30009	WRPS-PER-2009-0763	Trend Only
30010	WRPS-PER-2009-0764	Trend Only
30011	WRPS-PER-2009-0765	TUF - TRACK UNTIL FIXED
30012	WRPS-PER-2009-0766	Trend Only
30013	WRPS-PER-2009-0767	PIE/CIM
30014	WRPS-PER-2009-0768	Trend Only
30015	WRPS-PER-2009-0769	PER with Corrective Actions
30016	WRPS-PER-2009-0770	PIE/CIM
30017	WRPS-PER-2009-0771	PER with Corrective Actions
30018	WRPS-PER-2009-0772	PIE/CIM
30019	WRPS-PER-2009-0773	PIE/CIM
30020	WRPS-PER-2009-0774	PIE/CIM
30021	WRPS-PER-2009-0775	PIE/CIM
30022	WRPS-PER-2009-0776	PER with Corrective Actions
30023	WRPS-PER-2009-0777	TUF - TRACK UNTIL FIXED
30024	WRPS-PER-2009-0778	Trend Only
30025	WRPS-PER-2009-0779	PIE/CIM
30026	WRPS-PER-2009-0780	TUF - TRACK UNTIL FIXED
30027	WRPS-PER-2009-0781	PIE/CIM
30028	WRPS-PER-2009-0782	TUF - TRACK UNTIL FIXED
30029	WRPS-PER-2009-0783	Trend Only
30030	WRPS-PER-2009-0784	PIE/CIM
30031	WRPS-PER-2009-0785	PIE/CIM
30032	WRPS-PER-2009-0786	TUF - TRACK UNTIL FIXED
30033	WRPS-PER-2009-0787	Trend Only
30034	WRPS-PER-2009-0788	Trend Only

30035	WRPS-PER-2009-0789	Trend Only
30036	WRPS-PER-2009-0790	PIE/CIM
30037	WRPS-PER-2009-0791	Trend Only
30038	WRPS-PER-2009-0792	PIE/CIM
30039	WRPS-PER-2009-0793	Trend Only
30040	WRPS-PER-2009-0794	Trend Only
30041	WRPS-PER-2009-0795	INVALID
30042	WRPS-PER-2009-0796	TUF - TRACK UNTIL FIXED
30043	WRPS-PER-2009-0797	PER with Corrective Actions
30044	WRPS-PER-2009-0798	PIE/CIM
30045	WRPS-PER-2009-0799	PIE/CIM
30046	WRPS-PER-2009-0800	PER with Corrective Actions
30047	WRPS-PER-2009-0801	PIE/CIM
30048	WRPS-PER-2009-0802	PER with Corrective Actions
30049	WRPS-PER-2009-0803	Trend Only
30050	WRPS-PER-2009-0804	PER with Corrective Actions
30051	WRPS-PER-2009-0805	Trend Only
30052	WRPS-PER-2009-0806	TUF - TRACK UNTIL FIXED
30053	WRPS-PER-2009-0807	PIE/CIM
30054	WRPS-PER-2009-0808	PIE/CIM
30055	WRPS-PER-2009-0809	TUF - TRACK UNTIL FIXED
30056	WRPS-PER-2009-0810	TUF - TRACK UNTIL FIXED
30057	WRPS-PER-2009-0811	PIE/CIM
30058	WRPS-PER-2009-0812	TUF - TRACK UNTIL FIXED
30059	WRPS-PER-2009-0813	PIE/CIM
30060	WRPS-PER-2009-0814	PIE/CIM
30061	WRPS-PER-2009-0815	PIE/CIM
30062	WRPS-PER-2009-0816	PIE/CIM
30063	WRPS-PER-2009-0817	Trend Only

30064	WRPS-PER-2009-0818	PIE/CIM
30065	WRPS-PER-2009-0819	Trend Only
30066	WRPS-PER-2009-0820	PIE/CIM
30067	WRPS-PER-2009-0821	PER with Corrective Actions
30068	WRPS-PER-2009-0822	PER with Corrective Actions
30069	WRPS-PER-2009-0823	PIE/CIM
30070	WRPS-PER-2009-0824	Trend Only
30071	WRPS-PER-2009-0825	TUF - TRACK UNTIL FIXED
30072	WRPS-PER-2009-0826	PIE/CIM
30073	WRPS-PER-2009-0827	PIE/CIM
30074	WRPS-PER-2009-0828	PER with Corrective Actions
30075	WRPS-PER-2009-0829	PIE/CIM
30076	WRPS-PER-2009-0830	PIE/CIM
30077	WRPS-PER-2009-0831	PER with Corrective Actions
30078	WRPS-PER-2009-0832	PIE/CIM
30079	WRPS-PER-2009-0833	PIE/CIM
30080	WRPS-PER-2009-0834	TUF - TRACK UNTIL FIXED
30081	WRPS-PER-2009-0835	TUF - TRACK UNTIL FIXED
30082	WRPS-PER-2009-0836	TUF - TRACK UNTIL FIXED
30083	WRPS-PER-2009-0837	TUF - TRACK UNTIL FIXED
30084	WRPS-PER-2009-0838	TUF - TRACK UNTIL FIXED
30085	WRPS-PER-2009-0839	Trend Only
30086	WRPS-PER-2009-0840	PER with Corrective Actions
30087	WRPS-PER-2009-0841	TUF - TRACK UNTIL FIXED
30088	WRPS-PER-2009-0842	TUF - TRACK UNTIL FIXED
30089	WRPS-PER-2009-0843	PIE/CIM
30090	WRPS-PER-2009-0844	PIE/CIM
30091	WRPS-PER-2009-0845	PIE/CIM
30092	WRPS-PER-2009-0846	PIE/CIM
30093	WRPS-PER-2009-0847	TUF - TRACK UNTIL FIXED
30094	WRPS-PER-2009-0848	PIE/CIM
30095	WRPS-PER-2009-0849	PIE/CIM
30096	WRPS-PER-2009-0850	PIE/CIM
30097	WRPS-PER-2009-0851	Trend Only

30098	WRPS-PER-2009-0852	PIE/CIM
30099	WRPS-PER-2009-0853	PIE/CIM
30100	WRPS-PER-2009-0854	PIE/CIM
30101	WRPS-PER-2009-0855	PIE/CIM
30102	WRPS-PER-2009-0856	PIE/CIM
30103	WRPS-PER-2009-0857	PIE/CIM
30104	WRPS-PER-2009-0858	INVALID
30105	WRPS-PER-2009-0859	PER with Corrective Actions
30106	WRPS-PER-2009-0860	Trend Only
30107	WRPS-PER-2009-0861	PIE/CIM
30108	WRPS-PER-2009-0862	TUF - TRACK UNTIL FIXED
30109	WRPS-PER-2009-0863	INVALID
30110	WRPS-PER-2009-0864	PIE/CIM
30111	WRPS-PER-2009-0865	PIE/CIM
30112	WRPS-PER-2009-0866	TUF - TRACK UNTIL FIXED
30113	WRPS-PER-2009-0867	PIE/CIM
30114	WRPS-PER-2009-0868	TUF - TRACK UNTIL FIXED
30115	WRPS-PER-2009-0869	PIE/CIM
30116	WRPS-PER-2009-0870	PIE/CIM
30117	WRPS-PER-2009-0871	PIE/CIM
30118	WRPS-PER-2009-0872	PIE/CIM
30119	WRPS-PER-2009-0873	PIE/CIM
30120	WRPS-PER-2009-0874	PIE/CIM
30121	WRPS-PER-2009-0875	PIE/CIM
30122	WRPS-PER-2009-0876	PIE/CIM
30123	WRPS-PER-2009-0877	PIE/CIM
30124	WRPS-PER-2009-0878	PIE/CIM
30125	WRPS-PER-2009-0879	PIE/CIM
30126	WRPS-PER-2009-0880	PIE/CIM
30127	WRPS-PER-2009-0881	PIE/CIM
30128	WRPS-PER-2009-0882	PIE/CIM
30129	WRPS-PER-2009-0883	PIE/CIM
30130	WRPS-PER-2009-0884	PIE/CIM
30131	WRPS-PER-2009-0885	PIE/CIM
30132	WRPS-PER-2009-0886	TUF - TRACK UNTIL FIXED
30133	WRPS-PER-2009-0887	PIE/CIM
30134	WRPS-PER-2009-0888	PIE/CIM

30135	WRPS-PER-2009-0889	PIE/CIM
30136	WRPS-PER-2009-0890	PIE/CIM
30137	WRPS-PER-2009-0891	PIE/CIM
30138	WRPS-PER-2009-0892	PIE/CIM
30139	WRPS-PER-2009-0893	TUF - TRACK UNTIL FIXED
30140	WRPS-PER-2009-0894	TUF - TRACK UNTIL FIXED
30141	WRPS-PER-2009-0895	PER with Corrective Actions
30142	WRPS-PER-2009-0896	PER with Corrective Actions
30143	WRPS-PER-2009-0897	PER with Corrective Actions
30144	WRPS-PER-2009-0898	PER with Corrective Actions
30145	WRPS-PER-2009-0899	PER with Corrective Actions
30146	WRPS-PER-2009-0900	PIE/CIM
30147	WRPS-PER-2009-0901	PIE/CIM
30148	WRPS-PER-2009-0902	PER with Corrective Actions
30149	WRPS-PER-2009-0903	PER with Corrective Actions
30150	WRPS-PER-2009-0904	TUF - TRACK UNTIL FIXED
30151	WRPS-PER-2009-0905	TUF - TRACK UNTIL FIXED
30152	WRPS-PER-2009-0906	PIE/CIM
30153	WRPS-PER-2009-0907	PIE/CIM
30154	WRPS-PER-2009-0908	Trend Only
30155	WRPS-PER-2009-0909	PIE/CIM
30156	WRPS-PER-2009-0910	PER with Corrective Actions
30157	WRPS-PER-2009-0911	PER with Corrective Actions
30158	WRPS-PER-2009-0912	PIE/CIM
30159	WRPS-PER-2009-0913	TUF - TRACK UNTIL FIXED
30160	WRPS-PER-2009-0914	TUF - TRACK UNTIL FIXED
30161	WRPS-PER-2009-0915	Trend Only
30162	WRPS-PER-2009-0916	TUF - TRACK UNTIL FIXED
30163	WRPS-PER-2009-0917	INVALID
30164	WRPS-PER-2009-0918	TUF - TRACK UNTIL FIXED
30165	WRPS-PER-2009-0919	PER with Corrective Actions
30166	WRPS-PER-2009-0920	PIE/CIM
30167	WRPS-PER-2009-0921	PIE/CIM
30168	WRPS-PER-2009-0922	PIE/CIM
30169	WRPS-PER-2009-0923	PIE/CIM
30170	WRPS-PER-2009-0924	PIE/CIM
30171	WRPS-PER-2009-0925	TUF - TRACK UNTIL FIXED
30172	WRPS-PER-2009-0926	PIE/CIM
30173	WRPS-PER-2009-0927	INVALID
30174	WRPS-PER-2009-0928	PIE/CIM
30175	WRPS-PER-2009-0929	INVALID

30176	WRPS-PER-2009-0930	TUF - TRACK UNTIL FIXED
30177	WRPS-PER-2009-0931	TUF - TRACK UNTIL FIXED
30178	WRPS-PER-2009-0932	TUF - TRACK UNTIL FIXED
30179	WRPS-PER-2009-0933	TUF - TRACK UNTIL FIXED
30180	WRPS-PER-2009-0934	PIE/CIM
30181	WRPS-PER-2009-0935	TUF - TRACK UNTIL FIXED
30182	WRPS-PER-2009-0936	TUF - TRACK UNTIL FIXED
30183	WRPS-PER-2009-0937	Trend Only
30184	WRPS-PER-2009-0938	Trend Only
30185	WRPS-PER-2009-0939	TUF - TRACK UNTIL FIXED
30186	WRPS-PER-2009-0940	Trend Only
30187	WRPS-PER-2009-0941	Trend Only
30188	WRPS-PER-2009-0942	Trend Only
30189	WRPS-PER-2009-0943	PIE/CIM
30190	WRPS-PER-2009-0944	TUF - TRACK UNTIL FIXED
30191	WRPS-PER-2009-0945	Trend Only
30192	WRPS-PER-2009-0946	Trend Only
30193	WRPS-PER-2009-0947	Trend Only
30194	WRPS-PER-2009-0948	Trend Only
30195	WRPS-PER-2009-0949	Trend Only
30196	WRPS-PER-2009-0950	Trend Only
30197	WRPS-PER-2009-0951	Trend Only
30198	WRPS-PER-2009-0952	Trend Only
30199	WRPS-PER-2009-0953	PIE/CIM
30200	WRPS-PER-2009-0954	PER with Corrective Actions
30201	WRPS-PER-2009-0955	Trend Only
30202	WRPS-PER-2009-0956	TUF - TRACK UNTIL FIXED
30203	WRPS-PER-2009-0957	TUF - TRACK UNTIL FIXED
30204	WRPS-PER-2009-0958	Trend Only
30205	WRPS-PER-2009-0959	PER with Corrective Actions
30206	WRPS-PER-2009-0960	PIE/CIM
30207	WRPS-PER-2009-0961	PIE/CIM
30208	WRPS-PER-2009-0962	TUF - TRACK UNTIL FIXED
30209	WRPS-PER-2009-0963	TUF - TRACK UNTIL FIXED
30210	WRPS-PER-2009-0964	PIE/CIM
30211	WRPS-PER-2009-0965	PIE/CIM
30212	WRPS-PER-2009-0966	PIE/CIM
30213	WRPS-PER-2009-0967	PIE/CIM
30214	WRPS-PER-2009-0968	PIE/CIM
30215	WRPS-PER-2009-0969	PIE/CIM
30216	WRPS-PER-2009-0970	PER with Corrective Actions
30217	WRPS-PER-2009-0971	PIE/CIM
30218	WRPS-PER-2009-0972	PIE/CIM
30219	WRPS-PER-2009-0973	TUF - TRACK UNTIL FIXED
30220	WRPS-PER-2009-0974	PIE/CIM

30221	WRPS-PER-2009-0975	PIE/CIM
30222	WRPS-PER-2009-0976	PER with Corrective Actions
30223	WRPS-PER-2009-0977	PIE/CIM
30224	WRPS-PER-2009-0978	TUF - TRACK UNTIL FIXED
30225	WRPS-PER-2009-0979	TUF - TRACK UNTIL FIXED
30226	WRPS-PER-2009-0980	PER with Corrective Actions
30227	WRPS-PER-2009-0981	PIE/CIM
30228	WRPS-PER-2009-0982	Trend Only
30229	WRPS-PER-2009-0983	Trend Only
30230	WRPS-PER-2009-0984	PIE/CIM
30231	WRPS-PER-2009-0985	Trend Only
30232	WRPS-PER-2009-0986	TUF - TRACK UNTIL FIXED
30233	WRPS-PER-2009-0987	TUF - TRACK UNTIL FIXED
30234	WRPS-PER-2009-0988	TUF - TRACK UNTIL FIXED
30235	WRPS-PER-2009-0989	TUF - TRACK UNTIL FIXED
30236	WRPS-PER-2009-0990	TUF - TRACK UNTIL FIXED
30237	WRPS-PER-2009-0991	PIE/CIM
30238	WRPS-PER-2009-0992	Trend Only
30239	WRPS-PER-2009-0993	TUF - TRACK UNTIL FIXED
30240	WRPS-PER-2009-0994	PIE/CIM
30241	WRPS-PER-2009-0995	TUF - TRACK UNTIL FIXED
30242	WRPS-PER-2009-0996	PIE/CIM
30243	WRPS-PER-2009-0997	PIE/CIM
30244	WRPS-PER-2009-0998	PIE/CIM
30245	WRPS-PER-2009-0999	TUF - TRACK UNTIL FIXED
30246	WRPS-PER-2009-1000	TUF - TRACK UNTIL FIXED
30247	WRPS-PER-2009-1001	TUF - TRACK UNTIL FIXED
30248	WRPS-PER-2009-1002	Trend Only
30249	WRPS-PER-2009-1003	PIE/CIM
30250	WRPS-PER-2009-1004	PER with Corrective Actions
30251	WRPS-PER-2009-1005	PIE/CIM
30252	WRPS-PER-2009-1006	PIE/CIM
30253	WRPS-PER-2009-1007	PIE/CIM
30254	WRPS-PER-2009-1008	PIE/CIM
30255	WRPS-PER-2009-1009	PIE/CIM
30256	WRPS-PER-2009-1010	PIE/CIM
30257	WRPS-PER-2009-1011	TUF - TRACK UNTIL FIXED
30258	WRPS-PER-2009-1012	PIE/CIM
30259	WRPS-PER-2009-1013	TUF - TRACK UNTIL FIXED
30260	WRPS-PER-2009-1014	PIE/CIM
30261	WRPS-PER-2009-1015	PIE/CIM
30262	WRPS-PER-2009-1016	PIE/CIM
30263	WRPS-PER-2009-1017	TUF - TRACK UNTIL FIXED
30264	WRPS-PER-2009-1018	PIE/CIM
30265	WRPS-PER-2009-1019	PIE/CIM

30266	WRPS-PER-2009-1020	Trend Only
30267	WRPS-PER-2009-1021	PER with Corrective Actions
30268	WRPS-PER-2009-1022	Trend Only
30269	WRPS-PER-2009-1023	Trend Only
30270	WRPS-PER-2009-1024	TUF - TRACK UNTIL FIXED
30271	WRPS-PER-2009-1025	PIE/CIM
30272	WRPS-PER-2009-1026	PER with Corrective Actions
30273	WRPS-PER-2009-1027	PER with Corrective Actions
30274	WRPS-PER-2009-1028	PER with Corrective Actions
30275	WRPS-PER-2009-1029	Trend Only
30276	WRPS-PER-2009-1030	PIE/CIM
30277	WRPS-PER-2009-1031	PIE/CIM
30278	WRPS-PER-2009-1032	PIE/CIM
30279	WRPS-PER-2009-1033	Trend Only
30280	WRPS-PER-2009-1034	Further Evaluation
30281	WRPS-PER-2009-1035	PIE/CIM
30282	WRPS-PER-2009-1036	PIE/CIM
30283	WRPS-PER-2009-1037	PER with Corrective Actions
30284	WRPS-PER-2009-1038	PER with Corrective Actions
30285	WRPS-PER-2009-1039	PIE/CIM
30286	WRPS-PER-2009-1040	PER with Corrective Actions
30287	WRPS-PER-2009-1041	PER with Corrective Actions
30288	WRPS-PER-2009-1042	PIE/CIM
30289	WRPS-PER-2009-1043	PER with Corrective Actions
30290	WRPS-PER-2009-1044	PER with Corrective Actions
30291	WRPS-PER-2009-1045	PIE/CIM
30292	WRPS-PER-2009-1046	PER with Corrective Actions
30293	WRPS-PER-2009-1047	PIE/CIM
30294	WRPS-PER-2009-1049	Further Evaluation

30295	WRPS-PER-2009-1050	PIE/CIM
30296	WRPS-PER-2009-1051	PIE/CIM
30297	WRPS-PER-2009-1052	PIE/CIM
30298	WRPS-PER-2009-1053	PIE/CIM
30299	WRPS-PER-2009-1054	PIE/CIM
30300	WRPS-PER-2009-1055	PIE/CIM
30301	WRPS-PER-2009-1056	PIE/CIM
30302	WRPS-PER-2009-1057	PIE/CIM
30303	WRPS-PER-2009-1058	PIE/CIM
30304	WRPS-PER-2009-1059	PIE/CIM
30305	WRPS-PER-2009-1060	PIE/CIM
30306	WRPS-PER-2009-1061	PER with Corrective Actions
30307	WRPS-PER-2009-1062	PIE/CIM
30308	WRPS-PER-2009-1063	PER with Corrective Actions
30309	WRPS-PER-2009-1064	PER with Corrective Actions
30310	WRPS-PER-2009-1065	TUF - TRACK UNTIL FIXED
30311	WRPS-PER-2009-1066	TUF - TRACK UNTIL FIXED
30312	WRPS-PER-2009-1067	PIE/CIM
30313	WRPS-PER-2009-1068	PER with Corrective Actions
30314	WRPS-PER-2009-1069	PER with Corrective Actions
30315	WRPS-PER-2009-1070	Further Evaluation
30316	WRPS-PER-2009-1071	PER with Corrective Actions
30317	WRPS-PER-2009-1072	TUF - TRACK UNTIL FIXED
30318	WRPS-PER-2009-1073	TUF - TRACK UNTIL FIXED
30319	WRPS-PER-2009-1074	PER with Corrective Actions
30320	WRPS-PER-2009-1075	PIE/CIM
30321	WRPS-PER-2009-1076	TUF - TRACK UNTIL FIXED
30322	WRPS-PER-2009-1077	PIE/CIM
30323	WRPS-PER-2009-1078	PIE/CIM
30324	WRPS-PER-2009-1079	PIE/CIM
30325	WRPS-PER-2009-1080	PER with Corrective Actions
30326	WRPS-PER-2009-1081	PER with Corrective Actions

30327	WRPS-PER-2009-1082	PER with Corrective Actions
30328	WRPS-PER-2009-1083	Further Evaluation
30329	WRPS-PER-2009-1084	Trend Only
30330	WRPS-PER-2009-1085	PIE/CIM
30331	WRPS-PER-2009-1086	PER with Corrective Actions
30332	WRPS-PER-2009-1087	PIE/CIM
30333	WRPS-PER-2009-1088	TUF - TRACK UNTIL FIXED
30334	WRPS-PER-2009-1089	PIE/CIM
30335	WRPS-PER-2009-1090	PER with Corrective Actions
30336	WRPS-PER-2009-1091	TUF - TRACK UNTIL FIXED
30337	WRPS-PER-2009-1092	Trend Only
30338	WRPS-PER-2009-1093	Trend Only
30339	WRPS-PER-2009-1094	Trend Only
30340	WRPS-PER-2009-1095	Trend Only
30341	WRPS-PER-2009-1096	Trend Only
30342	WRPS-PER-2009-1097	INVALID
30343	WRPS-PER-2009-1098	Trend Only
30344	WRPS-PER-2009-1099	TUF - TRACK UNTIL FIXED
30345	WRPS-PER-2009-1100	PIE/CIM
30346	WRPS-PER-2009-1101	PER with Corrective Actions
30347	WRPS-PER-2009-1102	PER with Corrective Actions
30348	WRPS-PER-2009-1103	PIE/CIM
30349	WRPS-PER-2009-1104	PIE/CIM
30350	WRPS-PER-2009-1105	PER with Corrective Actions
30351	WRPS-PER-2009-1106	PER with Corrective Actions
30352	WRPS-PER-2009-1107	PIE/CIM
30353	WRPS-PER-2009-1108	PIE/CIM
30354	WRPS-PER-2009-1109	PIE/CIM
30355	WRPS-PER-2009-1110	PIE/CIM
30356	WRPS-PER-2009-1111	PIE/CIM
30357	WRPS-PER-2009-1112	PIE/CIM
30358	WRPS-PER-2009-1113	Further Evaluation
30359	WRPS-PER-2009-1114	PIE/CIM
30360	WRPS-PER-2009-1115	PIE/CIM
30361	WRPS-PER-2009-1116	PIE/CIM
30362	WRPS-PER-2009-1117	TUF - TRACK UNTIL FIXED

30363	WRPS-PER-2009-1118	PER with Corrective Actions
30364	WRPS-PER-2009-1119	TUF - TRACK UNTIL FIXED
30365	WRPS-PER-2009-1120	TUF - TRACK UNTIL FIXED
30366	WRPS-PER-2009-1121	PER with Corrective Actions
30367	WRPS-PER-2009-1122	TUF - TRACK UNTIL FIXED
30368	WRPS-PER-2009-1123	PER with Corrective Actions
30369	WRPS-PER-2009-1124	TUF - TRACK UNTIL FIXED
30370	WRPS-PER-2009-1125	TUF - TRACK UNTIL FIXED
30371	WRPS-PER-2009-1126	Trend Only
30372	WRPS-PER-2009-1127	Trend Only
30373	WRPS-PER-2009-1128	Trend Only
30374	WRPS-PER-2009-1129	PIE/CIM
30375	WRPS-PER-2009-1130	TUF - TRACK UNTIL FIXED
30376	WRPS-PER-2009-1131	Trend Only
30377	WRPS-PER-2009-1132	Trend Only
30378	WRPS-PER-2009-1133	PER with Corrective Actions
30379	WRPS-PER-2009-1134	PIE/CIM
30380	WRPS-PER-2009-1135	PER with Corrective Actions
30381	WRPS-PER-2009-1136	PER with Corrective Actions
30382	WRPS-PER-2009-1137	Trend Only
30383	WRPS-PER-2009-1138	PIE/CIM
30384	WRPS-PER-2009-1139	PIE/CIM
30385	WRPS-PER-2009-1140	PIE/CIM
30386	WRPS-PER-2009-1141	PIE/CIM
30387	WRPS-PER-2009-1142	PIE/CIM
30388	WRPS-PER-2009-1143	PIE/CIM
30389	WRPS-PER-2009-1144	PIE/CIM
30390	WRPS-PER-2009-1145	PIE/CIM
30391	WRPS-PER-2009-1146	Trend Only
30392	WRPS-PER-2009-1147	TUF - TRACK UNTIL FIXED
30393	WRPS-PER-2009-1148	Trend Only
30394	WRPS-PER-2009-1149	PIE/CIM
30395	WRPS-PER-2009-1150	TUF - TRACK UNTIL FIXED
30396	WRPS-PER-2009-1151	PIE/CIM
30397	WRPS-PER-2009-1152	TUF - TRACK UNTIL FIXED
30398	WRPS-PER-2009-1153	PIE/CIM
30399	WRPS-PER-2009-1154	PIE/CIM

30400	WRPS-PER-2009-1155	PIE/CIM
30401	WRPS-PER-2009-1156	TUF - TRACK UNTIL FIXED
30402	WRPS-PER-2009-1157	Trend Only
30403	WRPS-PER-2009-1158	PER with Corrective Actions
30404	WRPS-PER-2009-1159	PER with Corrective Actions
30405	WRPS-PER-2009-1160	TUF - TRACK UNTIL FIXED
30406	WRPS-PER-2009-1161	PIE/CIM
30407	WRPS-PER-2009-1162	Trend Only
30408	WRPS-PER-2009-1163	Trend Only
30409	WRPS-PER-2009-1164	PIE/CIM
30410	WRPS-PER-2009-1165	PIE/CIM
30411	WRPS-PER-2009-1166	TUF - TRACK UNTIL FIXED
30412	WRPS-PER-2009-1167	Trend Only
30413	WRPS-PER-2009-1168	PIE/CIM
30414	WRPS-PER-2009-1169	PER with Corrective Actions
30415	WRPS-PER-2009-1170	PIE/CIM
30416	WRPS-PER-2009-1171	PER with Corrective Actions
30417	WRPS-PER-2009-1172	PIE/CIM
30418	WRPS-PER-2009-1173	PIE/CIM
30419	WRPS-PER-2009-1174	PER with Corrective Actions
30420	WRPS-PER-2009-1175	PIE/CIM
30421	WRPS-PER-2009-1176	PIE/CIM
30422	WRPS-PER-2009-1177	PIE/CIM
30423	WRPS-PER-2009-1178	Further Evaluation
30424	WRPS-PER-2009-1179	PIE/CIM
30425	WRPS-PER-2009-1180	Trend Only
30426	WRPS-PER-2009-1181	Trend Only
30427	WRPS-PER-2009-1182	Trend Only
30428	WRPS-PER-2009-1183	Trend Only
30429	WRPS-PER-2009-1184	PIE/CIM
30430	WRPS-PER-2009-1185	TUF - TRACK UNTIL FIXED
30431	WRPS-PER-2009-1186	TUF - TRACK UNTIL FIXED
30432	WRPS-PER-2009-1187	PER with Corrective Actions
30433	WRPS-PER-2009-1188	PER with Corrective Actions
30434	WRPS-PER-2009-1189	Further Evaluation
30435	WRPS-PER-2009-1190	Trend Only
30436	WRPS-PER-2009-1191	Trend Only
30437	WRPS-PER-2009-1192	Further Evaluation
30438	WRPS-PER-2009-1193	Trend Only
30439	WRPS-PER-2009-1194	PIE/CIM

30440	WRPS-PER-2009-1195	TUF - TRACK UNTIL FIXED
30441	WRPS-PER-2009-1196	Further Evaluation
30442	WRPS-PER-2009-1197	PIE/CIM
30443	WRPS-PER-2009-1198	Trend Only
30444	WRPS-PER-2009-1199	TUF - TRACK UNTIL FIXED
30445	WRPS-PER-2009-1200	PER with Corrective Actions
30446	WRPS-PER-2009-1201	PIE/CIM
30447	WRPS-PER-2009-1202	TUF - TRACK UNTIL FIXED
30448	WRPS-PER-2009-1203	Further Evaluation
30449	WRPS-PER-2009-1204	Further Evaluation
30450	WRPS-PER-2009-1205	PER with Corrective Actions
30451	WRPS-PER-2009-1206	PER with Corrective Actions
30452	WRPS-PER-2009-1207	TUF - TRACK UNTIL FIXED
30453	WRPS-PER-2009-1208	PER with Corrective Actions
30454	WRPS-PER-2009-1209	PIE/CIM
30455	WRPS-PER-2009-1210	PIE/CIM
30456	WRPS-PER-2009-1211	PIE/CIM
30457	WRPS-PER-2009-1212	PER with Corrective Actions
30458	WRPS-PER-2009-1213	PIE/CIM
30459	WRPS-PER-2009-1214	PER with Corrective Actions
30460	WRPS-PER-2009-1215	PER with Corrective Actions
30461	WRPS-PER-2009-1216	PER with Corrective Actions
30462	WRPS-PER-2009-1217	PER with Corrective Actions
30463	WRPS-PER-2009-1218	PER with Corrective Actions
30464	WRPS-PER-2009-1219	PIE/CIM
30465	WRPS-PER-2009-1220	PIE/CIM
30466	WRPS-PER-2009-1221	PER with Corrective Actions
30467	WRPS-PER-2009-1222	TUF - TRACK UNTIL FIXED
30468	WRPS-PER-2009-1223	PIE/CIM
30469	WRPS-PER-2009-1224	PIE/CIM
30470	WRPS-PER-2009-1225	Not assigned
30471	WRPS-PER-2009-1226	Trend Only
30472	WRPS-PER-2009-1227	PER with Corrective Actions
30473	WRPS-PER-2009-1228	Not assigned

PerTitle	DateInitiated
Radeco air samplers were discovered to be outside the acceptable calibration tolerance	10/2/2008
Yellow hose was strung from an air compressor into a posted Contamination Area	10/2/2008
Radeco air sampler (# 9007 aka RAD-1047), was outside the acceptable calibration tolerance	10/2/2008
Tumbleweeds Collecting along a Contamination Area Boundary	10/2/2008
C-farm, Tumbleweeds Accumilating Across Contamination Boundries	10/2/2008
Contamination specks found in T-farm	10/2/2008
While Discharging Polar Tanker personnel were used to control radiological areas rather than using signs/rope for control	10/2/2008
During S302 Polar Tanker Discharge, Worker Has SRD in Pants Pocket	10/2/2008
Weakness was discovered with procedure TFC-ESHQ-RP_MON-C-24, REV E-2, "Sealed Radioactive Source Accountability and Contr	10/2/2008
Water isolated from SSTs	10/2/2008
A Radeco air sampler (# 9004 aka RAD-1039), was outside the acceptable calibration tolerance	10/2/2008
241-AW Primary Exhauster shutdown to erroneous reading on 1 of 3 Pressure Instruments on AW-102 tank	10/4/2008
Farm borders of U, T, TX need additional radiological postings.	10/6/2008
Farm borders of S, SX, SY need additional radiological postings.	10/6/2008
Farm borders of B, BY, AP, A, AX, AZ, AY, AW, AN, need additional radiological postings.	10/6/2008
SST Retrieval and Closure RadCon personnel issuing an accountable source without having TFC Designation of Source Custodian	10/6/2008
75,000 dpm 100cm2 beta gamma <20 dpm 100cm2 was found on the C104 condenser pit co	10/6/2008
1J Hood #1Drain Line Leak	10/6/2008
TFC-ESHQ-ENV_FS-C-01 (Environmental Notifications) has not been updated	10/7/2008
AN VTP inlet screen DP instrument AN106-VTP-PDI-221 is reading below range	10/7/2008
Warning sign issues	10/7/2008
WDOE- CCRC Management Plan Concerns	10/7/2008
WDOE -222S Dangerous Waste Training Plan Concern	10/7/2008
Conflicting instructions and in the TFC sealed source procedure TFC-ESHQ-RP_MON-C-24	10/7/2008
Documentation of the CBDPP as written in TFC-PLN-24	10/7/2008
The site beryllium inventory information	10/7/2008
Potential exposure to Beryllium during work activities	10/7/2008
Employees request and the requirements of the Beryllium registry	10/7/2008
Self assessment of Base Operations source control documents	10/7/2008
Ladder inspected and approved for service	10/7/2008
Main alarm panels are located at a height (~ 7 to 8 feet)	10/8/2008
105-A Breather Filter sight glass is cracked	10/8/2008
TRANSFER LINES NOT POSTED 'WASTE TRANSFER ZONE'	10/8/2008
DNFSB assessments of maintenance programs	10/8/2008
DNFSB indicated that the performance indicators for maintenance could be improved.	10/8/2008
Potential cold weather freezing problem for the underlying cross site transfer line.	10/8/2008

Due diliigence discovery items	10/9/2008
AW VTA K2-5-2 first stage HEPA filter DP reading is below range	10/9/2008
AW-101 tank ENRAF is O/S	10/9/2008
Safety Significant valves tested with water, not air or nitrogen and at varying pressures.	10/9/2008
SY B-Train primary exhauster inadvertently shut down	10/9/2008
A hole, approx. 8 inches deep on the southwest corner of 241-AZ-271	10/9/2008
Dose assessment in support of WRPS-PER-2008-008	10/9/2008
Potential Asbestos problem around the AP primary ventilation ducting	10/9/2008
air compressor at 242-A was found to have a failed fuel pump; diesel fuel had leaked onto the ground.	10/10/2008
EAPC WALK DOWN: 242-A-81 water building. 5 gallon container with no labels	10/10/2008
Workers had put up caution tape in 272-AW and there was no identifier as to the hazard.	10/10/2008
EAPC WALK DOWN: Evaluate Fire system blow out 2nd level on the south side of the building	10/10/2008
EAPC WALK DOWN: Damaged Husky light stand left in the AMU at 242A	10/10/2008
242A Improper use of power strips	10/10/2008
No protective cover over fluorescent lights on 242A mezzanine	10/10/2008
An Analytical Chemical Spill Occurred from a 2 ml Vial at the 222-S Laboratory	10/10/2008
From TOC Transition Completion "B" Punchlist as of 9/30/08	10/10/2008
TOC Transition Completion "B" Punch list as of 9/30/08 C.3.1.5.2-3.	10/10/2008
TOC Transition Completion "B" Punch list as of 9/30/08 C.3.1.5.2-4	10/10/2008
From the TOC Transition Completion "B" Punchlist as of 9/30/08 Address ORR defintion/application to TOC	10/10/2008
Fire Department Faliled to Bypass Fire Alarm during Testing Causing Inadvertent Alarm	10/10/2008
extinguishers mounted on the two portable generators providing power to the Dean dome were missing their September inspection	10/10/2008
DANGER SIGNS and ribbon need to be replaced on the new exhauster for potential burns to personnel.	10/13/2008
CH2M-PER-2008-1093 closed without completing action	10/13/2008
241-AZ-271 Building; SW corner of the building has a fire dept. blow out port that has eroded a large hole in the ground.	10/13/2008
Parking issues near Base Operations Shift Office	10/13/2008
Tracking of Rad Con Air Samplers	10/13/2008
241-AP substation main breaker was found with the ground fault trip indicator light on and the breaker not tripped.	10/13/2008
protect the workers from electrical shock due to the ground fault indication at breaker AP-farm	10/14/2008
Clean -up around 241-AZ-VP Pit	10/14/2008
Stairs shouldn't be used until they are repaired or removed	10/14/2008
AZ 102 tank has several layers of plastic bags to contain HCA levels deteriorating due to exposure	10/14/2008
REMOVE TRASH-- BAGGED AND TAGGED PUT IN L L WASTE	10/14/2008
Web Link contains information that's not consistent with current revision of "Procurement of Items (Materials)"	10/14/2008

Inconsistancy between procedures "Purchasing Card (P-Card)" (C-01) and "Procurement of Items (Materials)"	10/14/2008
THE FARM STATuS MAPS ARE OLD AND OUT DATAED	10/14/2008
TY-105 Riser #8 was found to be contaminated	10/14/2008
A-105 Breather Filter failed Aerosol test	10/15/2008
AX-102 Breather Filter failed Aerosol test	10/15/2008
Lab waste transfer inconsistencies	10/15/2008
OSD-007 discrepancies	10/15/2008
Contaminated rabbit feces discovered in a large uncontrolled area up to 60 feet from CA boundary North of SY-farm	10/15/2008
Bolts were left in the ST farm without being disposed of. EAPC	10/15/2008
Gaskets on the 104-AP and 108-AP manual tape sight glasses	10/15/2008
222-S Satellite Accumulation Area Inspection	10/16/2008
repair work on POR-104 in C-Farms is we discovered that higher contamination conditions existed than anticipated	10/16/2008
Ensure future work packages involving package of waste for shipment receive the appropriate reviews	10/16/2008
root cause analysis on recent crane events, noted there was not obj evidence to indicate wire rope inspections were performed	10/16/2008
Issue with lack of actions to the ARP when the primary exhauster shut off.	10/16/2008
Finger rings returned with the bar code numbers unreadable	10/16/2008
peer review of a Nuc Safety document calculating the time to LFL for 204-AR	10/16/2008
Fac Rep) not notified about an informal phone call from WRPS Environmental to Washington Department of Ecology (WDOE)	10/16/2008
found air sampler (AS) 272AS028 (AS028) to be out of tolerance (OOT) on four ranges during its routine calibration	10/16/2008
found air sampler (AS) 272AS005 (AS005) to be out of tolerance (OOT) on two ranges during its routine calibration	10/16/2008
found air sampler (AS) 272AS020 (AS020) to be out of tolerance (OOT) on one range during its routine calibration	10/16/2008
1268found air sampler (AS) 272AS006 (AS006) to be out of tolerance (OOT) on two ranges during its routine calibration	10/16/2008
annulus leak detection readings for AP Tank Farm were not obtained within the 24-hour time period as required.	10/16/2008
AN VTP exhauster shut down after connecting temporary power to A-train to support planned electrical outage	10/16/2008
Unsecured Plastic Containers Fell from Pick-up Truck	10/18/2008
routine radiological surveys, it has been noticed that many of the labels on tank components are missing or unledgeable	10/20/2008
Daily routines for the SST change trailer locations	10/20/2008
PCMs tagged out of service	10/20/2008
Contamination was found on S-102 Distributor Pit next to a valve handle	10/20/2008
annulus leak detection readings for AP Tank Farm were not obtained within the 24-hour time period	10/20/2008
NCR CH-08-NCR-032 on 3 S-302 filter housings	10/21/2008
A TLD was discovered in the 222S main lunchroom after lunch.	10/21/2008
Software tools are not readily available for procedure development	10/21/2008

RadCon received a calibration as-found out of tolerance (OOT) report from Base Operations Maintenance	10/21/2008
Radeco air sampler (serial number 9003), was outside the acceptable calibration	10/21/2008
219S cathodic protection system not functioning properly	10/21/2008
SOIL DRUM WASTE CATEGORY QUESTIONED	10/22/2008
Radiological Control received a calibration as-found out-of-tolerance report from PNNL	10/22/2008
AP Farm tank temperature readings on TMACS are very eratic	10/22/2008
Sign above door from change trailer (clean side) into the farm may need change	10/22/2008
702-AZ Decon trailer lighting issue	10/22/2008
HPT crossed a Lock and Tag boundary.	10/22/2008
Personnel potentially walking up the slopes of the cross-site transfer berm outside AN Farm	10/23/2008
PERs Closed without Notification to Originator	10/23/2008
Contaminated tumbleweed fragments found in URMA	10/23/2008
Vent and Balance Van Contaminated Items	10/23/2008
Scaffolding installed next to the chillers north of AY farm are labeled as RAM	10/23/2008
IH sampling in AP farm had pre/post flow difference of greater than 10%	10/23/2008
Shift manager applying GCX-2	10/24/2008
Lights on the second floor of 2750	10/24/2008
Revision to HNF-IP-1266 resulting from RPP-8050, Rev. 5.	10/24/2008
Bent riser in AN Farm	10/24/2008
Cable tray inside POR 138 Valve Box	10/24/2008
Annulus CAM systems	10/24/2008
Septic tank behind MO-979 overflowing	10/26/2008
3 ea. HEPA filters did not pass penetration tests	10/27/2008
Radiological Controlled Vehicles (RCVs) and movement of RAM requires a Blue Card	10/27/2008
Shipping of Scaffold poles	10/27/2008
Outside 241-A farm, 2 specs of contamination reading up to 25,000 dpm/100cm2 beta/gamma with no alpha	10/27/2008
Government parking behind 272AW	10/27/2008
Melted caution tape on AN W-314 Primary Exhauster	10/27/2008
Daily radiological routines (TFC-D007 and TFC-D006) were not performed as required over the 10/25/08 weekend	10/28/2008
Contaminated tumbleweed reading 45,000dpm/100cm2 beta/gamma with no alpha was found	10/28/2008
RWP does not adequately address Soil contamination area	10/28/2008
Not wearing respirator (3m hood) in the appropriate manner	10/28/2008
Surveys at 241-TX (RBA farm) three risers were found to have contamination on tank TX-118.	10/28/2008
ORP Surveillance of HEPA Filters	10/28/2008
S-08-ESQ-TANKFARM-017-O01: HEPA filter procurement specifications	10/28/2008
Electrical generator outside of AN Farm leaked approx. 2 qts of oil	10/28/2008
Contamination on SX-111 HEPA Filter	10/29/2008
Locked Doors on SX Farm Buildings Prevent Performing Surveys	10/29/2008

Oil spill at 702-az { south side } from a air compressor in a underground radioactivity area	10/29/2008
702-AZ HEME Access Port	10/29/2008
222-S Fume Hood HEPA Filter Testing	10/29/2008
Footwear Signs at MO-295 require Evaluation	10/29/2008
Specialty Assessment # FY2009-ESHQ-S-0347, Contract Not Properly Issued	10/29/2008
An employee did not have side shields on their prescription glasses	10/29/2008
S Farm change trailer portable electric generator removed	10/29/2008
High levels of contaminated rabbit feces have been discovered inside and outside of the S-complex	10/30/2008
SY Change Trailer Repairs Need to be Completed	10/30/2008
RMA-064 THE RVC PARKING AREA	10/30/2008
TFC-ESHQ-RP_MON-P-09, REV. E-1 GRAB AIR SAMPLING DOES NOT MENTION USING AIR SAMPLERS IN WET CONDITIONS	10/30/2008
Work Release OE's not trained to Controlling Organization Lockout/Tagout	10/30/2008
TX farm East side gate, contamination was found reading 45,000dpm/100cm2 beta/gamma	10/30/2008
Spray ring stored in RMA #172 was smearing 4000dpm/100cm2 beta gamma	10/30/2008
241-T farm, three risers were found to be contaminated.	10/30/2008
2 of the 3 employees did not have side shields on their prescription glasses	10/30/2008
SCBA was leaking air around the purge valve	10/30/2008
Illumination of the work area outside of AN Farm	11/3/2008
Radiation Routines were missed	11/3/2008
Direction from the routine surveillance program does not drive performance of direct surveys of the ground	11/3/2008
Maintenance Implementation Plan	11/3/2008
Weekly contamination survey (COF-W013)	11/3/2008
Weekly contamination survey of C- Farm per task COF-W013	11/3/2008
Cattle Guards for radiological Boundary Controls	11/4/2008
CHAMPs indicates that there are multiple old work orders worked but not completed.	11/4/2008
DNFSB letter regarding Hanford electrical systems	11/4/2008
AW VTP B Train glycol temperature	11/4/2008
Weekly contamination survey (COF-W013) of 241-SX farm	11/4/2008
North side of 242-T-701 tumbleweeds	11/4/2008
Noise monitoring was not being conducted for AW-02A cover block removal as required by the WHA	11/5/2008
Three Construction & Commissioning deliverable packages were found to have administrative errors	11/5/2008
CHG does not have procedures and processes for consistent selection of carriers	11/5/2008
submittal of a Hazardous Materials Incident Report to DOT	11/5/2008
ONLY BARE HANDS AND SHOE BOTTOMS CAN BE SELF-SURVEYED. NOT HAND CARRIED ITEMS	11/5/2008
CONTAMINATION WAS FOUND ON THE AW-106 PUMP PIT ON AND NEXT TO THE DISTRIBUTOR VALVE BASE PLATE	11/5/2008
Connex east of 241AP does not have a building number	11/5/2008

Contamination surveys of 241-BY perimeter found several specks of contamination	11/5/2008
Review of IH recordkeeping	11/5/2008
URMA survey of UPR-200-E77 Elevated Readings	11/5/2008
Contaminated Rabbit Droppings Outside S and SX Farms	11/5/2008
Contaminated Rabbit Droppings 242S Parking Lot	11/5/2008
HPT Routines Contaminated Soil Gate 8 RBA	11/5/2008
HPT Routines Contaminated Soil AY-102 RBA	11/5/2008
RWP TF-001 No PPE Requirements for DECOn of Contaminated Soil	11/5/2008
RWP TF-001 No Safe Condition Level for Contamination	11/5/2008
HPT Routines Contaminated Soil AY-101 RBA	11/5/2008
HPT Routines Completion Delays	11/5/2008
A potential adverse trend is crane operations has been observed.	11/5/2008
NTOs vs. Required emergency response	11/6/2008
Radeco Air Sampler not available	11/6/2008
Work Package did not have a waste planning checklist.	11/6/2008
Elevated Dose rates discovered during URMA survey of Slurry line between U-farm and SY farm	11/6/2008
Need to remove Unanalyzed, Unevaluated scaffolding from AW and AN Primary Tank Ventilation Exhauster Skids	11/6/2008
Waste Planning Checklist (WPC) was not included for job Clean Up of Lead Paint Chip in Duct Level	11/6/2008
PNNL interface to HEIS database	11/6/2008
Monthly RMA inspections	11/6/2008
Require the initiator of a work request for corrective maintenance	11/6/2008
222-SC HEPA Filter Procurement Specification Discrepancy	11/6/2008
Using SCBA while changing out bi-weekly air samples at 702-AZ	11/6/2008
inadequate Maintenance Training and that the program in place did not meet the requirements of DOE Order 5480.20A	11/7/2008
Radial breather filters SX-110 and SX-111 were found to be contaminated to 3000dpm/100cm2 beta/gamma no alpha	11/7/2008
Electrical cover removed and packaged and left by the AN#1 change trailer may not be re-usable equipment	11/7/2008
EAPC WALKDOWN: IH sample port was left open	11/7/2008
EAPC WALK DOWN: The tent located in AN farm has a hole in the Entrance room roof.	11/7/2008
242-A Condensor Room Contamination	11/7/2008
Both doors leading into CAM room for 702-AZ have two very alike signs.	11/7/2008
Some Rental Equipment have Fire Extinguishers which may require periodic inspections	11/7/2008
Flour Construction bldg. west of A complex have several outside Fire extinguishers that are not being maintained	11/7/2008
Two HPTs and one IHT entered a posted VCZ in AY/AZ without SCBA	11/7/2008
Planned improvement (shown below) had not been incorporated into Section 3.3.2.3.5.	11/7/2008
Revise AN and AW software so HMI indication of CAM power status is provided on the stack monitor screen	11/8/2008

AW and AN VTP control software provides SMAR selections on screens not intended to be accessed during normal operations	11/8/2008
Replace temporary tags with permanent labels in a timely manner.	11/8/2008
Operations Management of Alarm Panels has Demonstrated a Lack of Respect for Proper Conduct of Operations	11/10/2008
MO-041(Instrument Tech. trailer at Wet grout). Housekeeping issues	11/10/2008
MO-041- DAMAGED PARKING BARRIER	11/10/2008
MO-282-EAST ENTRANCE DECKING IS DETERIORATING	11/10/2008
Riser 105-BY 10A was found to be missing the temporary shielding tag and the riser identification number tag	11/10/2008
MO-282-BURNT OUT EXIT LIGHT	11/10/2008
temporary shielding tags are missing from the 101 A pump pit and on the lead on the ground North East of tank A-105.	11/10/2008
temporary shielding tags are missing from the 152-AX diverter station, the LDK-COB-AZ-3 cob box and the LDK-COB-AZ-1 cob box.	11/10/2008
survey of 241-S farm (COF-W013), spotty contamination was found on the soil with a direct reading up to 40mrad/hr beta/gamma	11/10/2008
RISER #8 AT 241-S-110 NEEDS RE-WRAPPED,	11/10/2008
Hazardous waste roles not checked at aces	11/10/2008
NEED NEW LEAD BLANKET INSTALLED ON TOP OF SX-109 RISER #13A	11/10/2008
Chemical Exposure Concern at the HAMMER Radiological Training Building	11/10/2008
Signs on Tank Farm change trailers are not consistent and all do not provide accurte information	11/10/2008
Identifications in the LIMS database did not agree with the identification in the QA department records.	11/10/2008
Closing PERs without employee involvement	11/11/2008
C Farm temporary shielding labels missing	11/11/2008
HPT questions release of soil as hazardous waste instead of mix waste	11/11/2008
Tank farm Radiation/Contamination Maps need replaced	11/11/2008
RADIATION MONITORING OF THE 702-AZ HEME TASK DESCRIPTION	11/11/2008
Stop work issued due employee concern	11/11/2008
RMA-032 Change Trailer has several paint items either laying open in the LLW bag or bagged and tagged	11/11/2008
RMA-033 AW farm has rotten wood on the ground left over from the back steps.	11/11/2008
Roll up doors at 2715-AW allow rain water to come in through the bottom seal	11/11/2008
241-S-304 catch tank open face filter failed annual aerosol testing	11/11/2008
244-S primary tank G-1 filter failed annual aerosol testing	11/11/2008
Clarification or procedure needs to be developed to address a six week window process	11/11/2008
Revise TF-OPS-005, Data Sheet 1 to identify which equipment is required to be operable per RPP-16922	11/12/2008
Stop work 242-A - condenser room ventilation issues	11/12/2008
Proceduralize the Requirement for a FWS Review and Signature on CHAMPS Data Sheets.	11/12/2008
242-A - Found contaminated speck reading 20,000 DPM Beta/Gamma with no Alpha	11/12/2008
Contamination Area next to 241-SX-281 holds tumbleweeds	11/12/2008

Radiological posting signs laying on the ground upside down	11/12/2008
There are two concrete monuments in the ground adjacent to BX/BY complex not clearly labled.	11/12/2008
Work Hazard Analysis process as defined in procedure TFC-ESHQ-S_SAF-C-02 does not prescribe when to use SME's	11/12/2008
There is a lack of definition associated with review and approval requirements for field work documents	11/12/2008
The field work scheduling process is not defined procedurally	11/12/2008
Existing Work Management/Work Control performance indicators do not provide necessary critical project review	11/12/2008
There is indication that PM activities do not receive the appropriate priority	11/12/2008
opportunities to improve understanding of roles and responsibilities drive efficiencies and better control	11/12/2008
Two deficiencies were identified C-200 Secondary Unit Substation (POR84-WT-SUS-001).	11/12/2008
Operations procedure for issuing a mask does not reflect the need to check the ACES brick	11/12/2008
Numerous PERs issued documenting new contamination areas in and around several tank farms	11/13/2008
ENVIORMENTAL CONTAMINATION SPREAD TO PLANTS AND ANIMALS VS LEGACY CONTAMINATION	11/13/2008
Response appears different between union worker's qualifications run out and exempts	11/13/2008
Damage to electrical box and damage to posting during yearly radiological surveys for the cross site transfer line	11/13/2008
It was determined that the wrong posting was installed on cross site line	11/13/2008
Bradley Eyewash Electric Heater unit that was not listed and labeled by a Nationally Recognized Testing Laboratory (NRTL).	11/13/2008
Evaluation of insulated tools/equipment used by electricians, for work in the limited approach boundary needs to be performed	11/17/2008
HPT's assigned to 272AW have no air samplers available from 272-AW	11/17/2008
Pcm at 241-S would not clear personnel after passing weekly source check	11/17/2008
Identify the hazards prior to conducting the pre-job, and complete the WHA form	11/18/2008
PER's have been issued regarding ACES and non RWP related roles with no response as of yet	11/18/2008
some personnel are able to obtain a respirator prior to using ACES	11/18/2008
An air space meeting the requirements of an ARA was not posted, and an employee entered the area	11/18/2008
Breathing air cam on the fourth floor of 242-a condenser room requirement questioned	11/18/2008
ACE314 box in ACES for RWP TF-RESPIRATOR	11/18/2008
Observation: S-08-AMTF-TANKFARM-011-O03; An extension cord was being pinched by the outside door leading into 271-CR	11/19/2008
Observation: S-08-AMTF-TANKFARM-011-O02; PER was closed without FR concurrence.	11/19/2008
Two previous PERS on water leak above ceiling tiles closed without feedback	11/19/2008
Permissive switch for the transfer pump located in 242-S had no power	11/19/2008

Regulated Drott/Case #17-19700 track hoe may have leaked fluid to soil by C Farm	11/20/2008
Employee injured back while loading chemical refrigerated storage cabinets on pallet	11/20/2008
244-AR HRA/CA posting as well as a similar posting at the 242-S evaporator building was evaluated by Base Ops RadCon personne	11/20/2008
W-314 Monitoring and Control System (MCS) do not have qualification documentation	11/20/2008
Base Ops Assessment Observation - Wrong Course Number Identified	11/20/2008
Worker Assessment FY09-222SLSS-WA-004 Observation #2	11/20/2008
Worker Assessment FY09-222SLSS-WA-004 Observation #3:	11/20/2008
Worker Assessment FY09-222SLSS-WA-004 Observation #4:	11/20/2008
Worker Assessment FY09-222SLSS-WA-004 Observation #5a	11/20/2008
Worker Assessment FY09-222SLSS-WA-004 Observation #5b	11/20/2008
Worker Assessment FY09-222SLSS-WA-004 Observation #5c	11/20/2008
Worker Assessment FY09-222SLSS-WA-004 Observation #5d	11/20/2008
Worker Assessment FY09-222SLSS-WA-004 Observation #6	11/20/2008
Survey dirt saturated with diesel	11/21/2008
Sy change trailer	11/21/2008
Checking respirator training in ACES	11/21/2008
Beryllium Contamination boundary	11/21/2008
AW VTP A Train glycol tank temperature	11/22/2008
Winter time preparations incomplete at various West Tank Farms	11/25/2008
Deficiency in the Hanford Site Lockout/Tagout Procedure was identified	11/25/2008
An area for improvement in the TFC Caution Tag procedure was identified.	11/25/2008
Subcontractors hoisting and rigging training	11/25/2008
Planned work activities requiring a flam gas evaluation	11/25/2008
EAPC safety inspection of the 2703-E facility	12/1/2008
Procedures to Perform 219-S to 101-SY Transfer	12/1/2008
242 S CLEAN LAUNDRY CONEX	12/1/2008
Posting requirements	12/1/2008
Defective Industrial Job-Box Lid	12/1/2008
HRA was left unsecured	12/1/2008
Change trailer does not have power	12/2/2008
Air Sampler Use In Wet Conditions	12/2/2008
Answer to PER-2008-0152 was less than adequate	12/2/2008
Inconsistencies in ASME NQA-1 Requirements Flow Down to Subcontractors	12/2/2008
TSR Violation	12/2/2008
Heat trace requirements for flex jumpers in Tank Farms	12/3/2008
Egress tent adjacent to middle C change trailer (MO-512)	12/3/2008
Transfer lines have significant tumbleweed growth	12/3/2008
Lighting at the C-farm trailer village	12/3/2008
Heaters in the W-314 leak detector enclosures	12/3/2008
An increased slowness in response time in acknowledging alarms was experienced by operators using the 242A MCS	12/3/2008
Documentation supporting Buckling Pin Relief Valve AW02A-WT-V-106 as a safety significant pressure relieving device has issue	12/3/2008

CHAMPS training is not effectively identified as a needed component in specific job categories that need to use CHAMPS	12/4/2008
Two small bags of dirt tumble weeds, and rabbit feces in SCA west of SY	12/4/2008
Tagging scaffolding stored in an RMA	12/4/2008
Refrigerant storage and usage requirements for leakage monitoring for a Vent and Balance application	12/4/2008
AN Farm K2-5-1 annulus exhaust fan was intermittantly making a squealing sound	12/4/2008
ORP reviewer disagreed with the logic given by a former CH2M safety mgr and recommended WRPS record the 7 days as lost work	12/4/2008
routine surveillances at 272-S Camera Decon Facility discovered rabbitt droppings	12/4/2008
Management Support of Base Ops EAPC Meetings	12/5/2008
Hot Speck Found At The West Side Of The C-106 Pump Pit	12/5/2008
AY241-EDS-XFMR-103 transformer showed signs of excessive heat	12/5/2008
Breather filters on SX-110, SX-111, SX-112 and SX-114 are saturated with water	12/5/2008
242-A FreezeStat on the K1 supply causting K1-5-1 Exhaust Fan to Shut Down	12/5/2008
Items Identified during EAPC walkdown at 204-AR Facility	12/5/2008
Consistency in Work Hazard Analysis (WHA) use	12/5/2008
potential Fire Hazard from wires hanging near heaters in numerous MCS leak detector cabinets	12/8/2008
Styrofoam Cups found in vehicles in a RMA	12/8/2008
Several individuals in the 222-S Maint. Shop were not wearing safety glasses.	12/8/2008
2701HV-FLANDERS RADIAL FILTER DISCREPANCY BETWEEN DATA ON THE LABEL ON THE FILTER AND THE LABEL ON THE BOX	12/9/2008
The as-found M&TE reading (CTV) on SN 10322 (RAD1035) was outside the allowable tolerance	12/9/2008
signage in T Farm was found to be defunct and out of date	12/9/2008
Failure to Tag a Laboratory Balance Appropriately	12/9/2008
Results for determining potential airborne radioactivity concentration was not documented on ALARA, (AMW)	12/9/2008
Changes suggested to MASTER ROUTINE SURVEY FORMS RSR	12/9/2008
Open electrical junction box at 272-S	12/9/2008
Issue CAP to address exceptions from (EM-62) conducted assessment	12/9/2008
Response to contamination discovered in 222-S Contamination Area.	12/10/2008
Rudy Cart and Conttents in RMA-064 (west of 274AW) Needs to be Surveyed	12/10/2008
Rudy Cart and Contents in RMA-158 (east of MO-979) Needs to be Surveyed	12/10/2008
Tank Farms Activities Need to be Evaluated Under the New PrHA Process	12/10/2008
November first aid case - bug bite	12/11/2008
November First aid case - scraped hand	12/11/2008
November first aid case - Back strain	12/11/2008
Recordable injury - knee popped	12/11/2008
An change trailer: Map cabinet needs the plexiglass replaced	12/11/2008
S-08-AMTF-TANKFARM-012-O01; Work planning/release efforts did not recognize a condition that precluded troubleshooting	12/11/2008
S-08-AMTF-TANKFARM-012-O03; Routing Board Drawing (RBD) in 272-AW was not current for the siphon standpipe station	12/11/2008
contaminatiion found outside SY farm	12/11/2008
Instrument shop. Photo of electrical cord ran to a power strip.	12/11/2008

272AW MECANICAL SHOP; Florescent lights need replaced	12/11/2008
Contaminated shipping containers received at 222-S	12/11/2008
FIT) Plan for the Split Ring Riser Extension Assembly for AN-06A Central Pump Pit CH-08-NCR-037.	12/11/2008
EAPC WALK DOWN: 272AW GARAGE AREA needs re-lamped	12/11/2008
EAPC WALK DOWN: 272AW UT STORAGE ROOM Evaluate shelves for overloading	12/11/2008
272AW OPS turnover area: Needs relamped	12/11/2008
Radiological Posting Deficiency outside 272-AW	12/11/2008
MO-266- Needs BUILDING ORG. replaced on the EMERGENCY RESPONSE BOARD	12/11/2008
EAPC WALK DOWN OF 278 AW: Evaluate the location of the Safety Glass sign for the south side of the building	12/11/2008
EAPC WALKDOWN: URMA PIPELINE SIGN AND POST. south of 272 AW is leaning	12/11/2008
EAPC WALK DOWN STREET-CROSSING WALKWAY AT SOUTH END 274-AW may need rerouting	12/11/2008
EAPC WALK DOWN. 274 AW ENTRANCE CEILING TILE ARE OUT OF PLACE	12/11/2008
EAPC WALK DOWN: 274 AW PARKING AREA ON NE CORNER breaking the blacktop	12/11/2008
no instruction in the Weekly routine radiological survey tasks to perform direct ground surveys in RBAs PER-2008-1859	12/11/2008
NEC non-compliances were discovered in the two (2) circuits fed from AY801A-EDS-MCC-001 breakers 163 and 164 AY Annulus Exh	12/11/2008
Winterization functional testing of electrical equipment will not be properly performed during temperature excursions	12/13/2008
Tank AZ-102 level	12/13/2008
FINDING: Radiological containment practices did not meet requirements for equipment removal for the AP-05A pit	12/15/2008
OBSERVATION: Control Area postings are not standardized Walkdown of 271-AZ area (Williamson, 12-1-08)	12/15/2008
Worker opened their PPE coveralls and retrieved an item	12/15/2008
Red Arrow did not provide adequate details on safety limitations for the use of Portable Air Samplers (Ciola, 12-3-08)	12/15/2008
Observation: The amount of required glycol mixture was not well understood before work occurred. (Sondag, 12-4-08)	12/15/2008
OBSERVATION: The work area around the glycol tank could have been better accessed from a ladder or other appv'd work platform	12/15/2008
weekly routine tasks for C-104, C-110, C-109, and C-108 Exhauster Groups were not completed as required by Weekly Task Desc.	12/15/2008
(ORP) conducted an assessment (WRPS) Radiological Source Control Program Finding A-08-ESQ-TANKFARM-010-F01	12/15/2008
(ORP) conducted WRPS assessment Radiological Source Control Program Finding A-08-ESQ-TANKFARM-010-F01	12/15/2008
(ORP) conducted an assessment Radiological Source Control Program Issue #3 concerns radiological shipping	12/15/2008
ORP assessment WRPS) Radiological Source Control Program Observation A-08-ESQ-TANKFARM-010-O02	12/15/2008
ORP assessment Radiological Source Control Program Observation A-08-ESQ-TANKFARM-010-O04	12/15/2008
TFLAN MULTIMODE WIRING HAS BEEN INSTALLED NCR CH-08-NCR-038	12/16/2008

EAPC inspection of 2704HV, a number of cardboard boxes are stored on the floor and under the desk in office D 113	12/16/2008
Review new Site Wide Lockout Procedure to verify proper controls are in place for using Equivalent Protection tags	12/16/2008
Erroneous seal pot levels are requiring significant resources to respond to alarms and VTP shutdowns	12/16/2008
ORP Facility Representative's weekly report: Pre-job briefings for Camera light replacement in C-110, Riser 3	12/17/2008
Evaluation of radcon work practices during hi-risk containment work	12/17/2008
Timely review of radiological survey reports	12/17/2008
W-314 AW VTP software requirements not updated correctly	12/17/2008
Sand accumulation due to wind along T-Farm Fence	12/17/2008
HISI detailed information for MARS	12/17/2008
241-AN De-entrainer level indication system	12/17/2008
241-AN VTP exhauster seal pot level indication failed due to extreme low temperature	12/17/2008
Condensate drained out of the 702-AZ ventilation duct work and onto the floor of the CAM room	12/18/2008
Stop work - excavation in URMA	12/18/2008
Are personal performing cold weather inspections trained to, and in compliance with NFPA 70E ?	12/18/2008
HPTs smelled odors while obtaining 702-AZ condensate samples	12/18/2008
Control of Portable Heaters	12/18/2008
Cabinets in the Farms have exposed wiring	12/19/2008
Winterization checks	12/19/2008
Wet radial HEPA breather filters	12/19/2008
Plastic odor was detected in MO732	12/19/2008
Gate between TY and TX farms	12/19/2008
Use of air samplers	12/19/2008
RWP-C-04, 4.7.1.3.b and d not performed as written	12/19/2008
Frozen passive breather filter piping	12/19/2008
Surveillance of Winterized Buildings for East Tank Farms	12/21/2008
West Tank Farms Winterization checks	12/21/2008
AW Farm Cabinet temps need adjusting	12/21/2008
AW VTA 1st stage HEPA filter (AW241-VTA-PDI-702) reads below range	12/21/2008
AW102-VTP-PDI-205 and AW103-VTP-PDI-209 read below range	12/21/2008
Water pipe break at MO-730	12/21/2008
Radcon Stop Work Issues	12/22/2008
2715-AW (Supply) and 278-AW (mask station) had not had any snow removal done.	12/22/2008
AW Weekly Survey	12/22/2008
PER Closed Without Feedback	12/22/2008
AN Stack Cam Bypass Operation	12/23/2008
106-AN Annulus Zone 3 (AN106-WSTA-LIS-105) leak detection housing	12/23/2008
Commercial Grade Item Dedication process	12/23/2008
Mens toilet in the main change room not in service	12/29/2008
ORP Facility Representative's weekly report	12/29/2008

SY change trailer layout is awkward	12/29/2008
Possible significant operational event	12/29/2008
Hi-risk work evolutions in close proximity	12/29/2008
Off-scale direct reading dosimeter	12/29/2008
702 AZ Building Stack Primary Stack Cabinet	12/29/2008
702-AZ HPT routines	12/29/2008
Change to Administrative Control (AC) 5.11, "Transfer Controls," key element 5.11.2.a.3	12/30/2008
SST Rad. surveys	12/30/2008
Cabinet temperature adjustments	12/30/2008
Air sampler out of tolerance	12/30/2008
Air sampler out of tolerance	12/30/2008
Commercial Grade Item (CGI) Upgrade dedication process	12/30/2008
Commercial Grade Item Upgrade Dedication	12/30/2008
Air sampler (AS) 272AS044 (AS044) to be out of tolerance	12/30/2008
Evaluate Limited Water Tank Requirements for 222-S system	12/30/2008
Work Control Procedure	12/30/2008
PER feedback	12/31/2008
Response to PER-2008-0142	12/31/2008
Evaluate need for cabinet ventilation inspections for 222-S	12/31/2008
Verifying the completion of fire system maintenance	12/31/2008
Waste Transfer Zone signs	12/31/2008
Entrance doors of trailer (MO-979)	12/31/2008
Hoisting and rigging Lead Equipment Custodian	12/31/2008
Work package change	12/31/2008
702 AZ Building Stack Sample Exchange	12/31/2008
AN241 VTA PDI 801	1/1/2009
testing of a 30 amp GFCI on the main breaker panel in the ATCO shop	1/2/2009
PERs being closed without feedback to employee	1/5/2009
RWP and Risk level concern	1/5/2009
New DOE standards need to be evaluated for potential impacts to existing internal dosimetry procedures	1/5/2009
Not sufficient warning to workers to prevent unqualified personnel from accessing cabinets with potential electrical hazards	1/5/2009
Condensate dripping from 702AZ Ventilation System	1/5/2009
DOE ORP Assessment Finding evaluation identified issue with LOW Source Shippment	1/5/2009
204-AR Ventilation Maintenance	1/5/2009
Exposed electrical conductors - stop work issues	1/5/2009
Out of Tolerance found on air sampler (272AS012)	1/5/2009
Valve ANVPA-WT-MOV-318 is an Evaluated Waste Transfer Isolation Valve utilized for Double Valve Isolation possibly degraded	1/5/2009
Test of PER vs3.01 Run on 01/05/2009	1/5/2009
Air sampler serial number 21714 (STA2009) was found out of tolerance	1/6/2009
Self-contained eyewash stations not compliant with industrial safety standards	1/6/2009
Record sampler filter paper being wet the last two filter paper changes	1/6/2009
FIRST AID – Employee slipped on ice while walking to building	1/6/2009

FIRST AID – Employee slipped on exhauster pad	1/6/2009
FIRST AID – Employee tripped and fell while going up stairs	1/6/2009
FIRST AID – Employee tripped and fell in farm	1/6/2009
FIRST AID – Employee bumped elbow on crawl space door	1/6/2009
RECORDABLE – While working on a panel, employee received laceration to finger	1/6/2009
Exposed Electrical Conductors hazard - issues	1/6/2009
(ORP) assessment of the Project W-314 AW Exhauster Skid Finding A-08-AMENS-TANKFARM-003-FO1:	1/6/2009
(ORP) assessment of the Project W-314 AW Exhauster Skid Finding A-08-AMENS-TANKFARM-003-FO2:	1/6/2009
(ORP) assessment of the Project W-314 AW Exhauster Skid Finding A-08-AMENS-TANKFARM-003-FO3:	1/6/2009
(ORP) assessment of the Project W-314 AW Exhauster Skid Finding A-08-AMENS-TANKFARM-003-FO4:	1/6/2009
(ORP) assessment of the Project W-314 AW Exhauster Skid Non-Cited Finding A-08-AMENS-TANKFARM-003-NO1:	1/6/2009
(ORP) assessment of the Project W-314 AW Exhauster Skid Observation A-08-AMENS-TANKFARM-003-OO1:	1/6/2009
(ORP) assessment of the Project W-314 AW Exhauster Skid Observation A-08-AMENS-TANKFARM-003-OO2:	1/6/2009
(ORP) assessment of the Project W-314 AW Exhauster Skid Observation A-08-AMENS-TANKFARM-003-OO3:	1/6/2009
(ORP) assessment of the Project W-314 AW Exhauster Skid Follow-up Item A-08-AMENS-TANKFARM-003-AO1:	1/6/2009
Numerous Annulus Leak Detectors in alarm in AN farm during Fac Rep Observation	1/6/2009
Revise the PIC Performance Demonstration to identify the specific tasks that need to be performed by the Maintenance PICs	1/6/2009
Employee slipped on ice at 2711 striking his right knee against the tongue of the trailer	1/7/2009
PMs 242-A K1 ventilation system, work was stopped because the labels in the field did not match the drawing.	1/7/2009
AN105-WSTA-LIS-104 Flake box annulus LD is split on one side	1/7/2009
AW103-WSTA-LIS-105 is a Flake box type annulus conductivity leak detector at tank AW-103. The side box is breaking away.	1/7/2009
No ECN for bolts	1/7/2009
6 -55 gal. poly bung drums of 30% Caustic solution MSDS #065458 appeared to have frozen	1/7/2009
Monthly inspections of Hazardous Storage Bldg. (HS-0085) found both lights burnt out again.	1/7/2009
The Hazardous Storage bldg. has no heat and hasn't for a long time.	1/7/2009
Radiological sign with the wrong inserts	1/8/2009
Valves APVP-WT-V-617 and APVP-WT-V-620 turn freely 40 degrees	1/8/2009
Daily Report my have erroneous information about availability of Safety Showers within the 616 Bldg.	1/8/2009
Egress lighting for the 2570E building is not in compliance with the NFPA-101 Life Safety Code	1/8/2009

AR-151: Pit Video & Surveys For HIHTL Removal	1/9/2009
AW VTP reading AW241-VTP-PDI-351	1/11/2009
Adverse trend was identified showing an increase in the number of PERs issued for contamination control.	1/12/2009
Problems with PER trending codes and data retrieval	1/12/2009
Reviewing procedure TFC-ESHQ-RP_RWP-C-04, REV D-18	1/12/2009
AP labelling	1/12/2009
AW-105 inlet DP is reading below range on operator rounds.	1/12/2009
AW-106 inlet DP is reading below range on operator rounds.	1/12/2009
FINDING: S-08-AMTF-TANKFARM-013-F03 - Building 616 Incompatible Waste Containers Not Segregated.	1/13/2009
NON-CITED FINDING: S-08-AMTF-TANKFARM-013-O12 - Guidance for non-reg/recycle pad or rad. LLW pad containers not clearly ident	1/13/2009
HISI detailed information for MARS	1/13/2009
It is unknown if a maintenance file exists for 2 below the hook lifting devices	1/13/2009
Breaker feeding the portable compressor at 204-AR is tripped and circuit overloaded	1/13/2009
OBSERVATION - Clarification On The Intent Of The Use Of Remote Monitoring Cameras Is Warranted	1/13/2009
Maintenance assessment determined that an Engineer submitted a old revision of System Engineer Qualification	1/13/2009
Bag of LLW found in LLW trailer that was not double bagged/inventoried or rad. tag applied.	1/13/2009
RWP's utilizing a facility code of TFJ not compliant with procedure	1/13/2009
Notification to on-call Radcon Supervisor	1/14/2009
WCH had a Corona Colt 4 Smoke Generator (new) trip an electrical breaker and started smoking (electrical wire smoking)	1/14/2009
Sunbelt Rental Generator S-213820 Fire Extinguisher issues	1/14/2009
Thermo/Bicron Micro Rem, barcode LMBC3-0070, serial number C380F instrument was found out of Cal	1/14/2009
Johnson 2000W, barcode XEWB2-0037, serial number 2830, found out of Cal	1/14/2009
Missing Labels from 2219-S stack monitoring components	1/15/2009
Calibration sticker requiremens for 296-S-16 stack monitor.	1/15/2009
C-110 Technical Baseline Review Workshop suggestion for crane use	1/15/2009
Improper segregation of waste	1/16/2009
Radioactive tumbleweed was found.	1/16/2009
6' Capital Safety (Protecta) anchorage connector	1/16/2009
AW VTP HMI readings	1/16/2009
AY Farm Heat Trace Cabinet Door Broken	1/16/2009
Cabinet Door not mantained closed in AY Recirc Bldg	1/16/2009
Scoffolding erected near electrical disconnects	1/16/2009
Management Assessment FY2009-SHQ-M-0116, Improvements Needed in Hazard Evaluation Process	1/19/2009
management assessment FY2009-SHQ-M-0116 Maintenance Procedure Issues	1/19/2009
management assessment FY2009-SHQ-M-0116, Hierarchy of controls is required by 10 CFR 851	1/19/2009

White Flush truck license # E-37470(RCV). The crank on the hose reel needs to have a pin replaced	1/19/2009
Heat trace power cord for the three-way jumper in AN06A	1/19/2009
WEEKLY ROUTINE SURVEY FORM FOR PACKET 17# HAS TWO ERRORS	1/19/2009
Chemist performing qualatative dose rates above action levels	1/19/2009
A-Farm Scaffolding	1/19/2009
Personnel wearing TLDS incorrectly	1/20/2009
SY Change Trailer Emergency Response Board	1/20/2009
Broken bench in the contamination area inside SY change trailer	1/20/2009
SY 02A PIT was found with electrical wires on top of the blocks	1/20/2009
204-AR Lighting Issues	1/20/2009
SY B TRAIN: Vapor Control Zone signs are damaged and need to be replaced	1/20/2009
Chipped and broken grout was observed around the base of the 42-inch vapor line	1/20/2009
Slippery grating sign found at Sy exhauster	1/20/2009
SY Excavation Needs Posting	1/20/2009
272 AW GARAGE RMA. RCV WATER TRUCK	1/20/2009
5 GAL. OF PAINT LABELED AS RMA	1/20/2009
AP FLUSH PIT	1/20/2009
EAPC WALK DOWN OF AP FARM: SMALL CAVE IN ALONG EAST SIDE OF AP 02D PIT.	1/20/2009
Procedures TFC-BSM-IRM_HS-C-01 and TFC-BSM-IRM-STD-01 referred to wrong contract	1/21/2009
13 WRPS HISI entries were found with no Software Quality and Safety Checklist submitted and approved	1/21/2009
8 HISI entries found to be owned by WRPS but the individual listed as the owner is not an employee	1/21/2009
Overhead projector located in the HPT lunchroom was found with exposed wires	1/21/2009
Permanent RMA sign needed to replace Temporary at RMA-022	1/21/2009
RMW-021- RMA sign is faded and the surface covering for the metal sign is cracking	1/21/2009
Old shed located in the 702 AZ courtyard needs to be moved	1/21/2009
AY # 1 RBA: Old air conditioner Has a faded RMA tag	1/21/2009
5' ladder found outside the AY control room didn't display a yearly inspection sticker	1/21/2009
AY RECIRC. BLDGS: REPLACE LIGHTING	1/21/2009
AZ RECIRC. BLDGS. NEED LIGHTING REPLACED	1/21/2009
TFC-ESHQ-S_SAF-C-09, REV B-1 exhibit A form not a site form	1/21/2009
SY exhauster Cam issues	1/21/2009
Issues of concern with AY AZ recirc buildings	1/21/2009
Noise study was performed using the Staplex air sampler	1/21/2009
EAPC WALK DOWN OF AZ FARM, electrical/instrumentation cabinet	1/21/2009
EAPC WALK DOWN OF AZ: Hole around a riser needs to be evaluated and back filled	1/21/2009
EAPC WALK DOWN OF AZ FARM: HOUSEKEEPING AND TRIPPING HAZARD	1/21/2009
EAPC WALK DOWN: DETERIORATING SLEEVING AZ 101 TANK TOP HAT ASSEMBLY	1/21/2009
EAPC WALK DOWN OF AZ FARM: EXCESS WIRING CREATES A TRIPPING HAZARD	1/21/2009

EAPC WALK DOWN. AZ 101 ENRAF SHIELDING PROBLEMS NEEDS EVALUATION BY ENGINEERING	1/21/2009
EAPC WALK DOWN. CAVE IN ON AZ 101 TANK	1/21/2009
EAPC WALK DOWN. AX 151 IS MISSING A HAZARDOUS VAPOR SIGN ON THE NORTHSIDE	1/21/2009
Nuisance Alarms on TFMCS during Transfer	1/21/2009
EAPC WALK DOWN: Ladder in the AZ control room needs a yearly inspection	1/21/2009
AP bottle storage area	1/21/2009
DANGER HAZARARDOUS MATERIAL SIGN NEEDS TO BE REATTACHED TO THE CONTROL RM	1/21/2009
BROKEN DOOR LATCH FOR PRIMARY CAM CABINET	1/21/2009
Eyewash station was identified that hadn't been inspected since 11/2008	1/21/2009
FADED AND WORN TEMPORARY HAZARDOUS POSTING SIGNS	1/21/2009
Missing Vapor hazard posting	1/21/2009
HOUSEKEEPING AND POSTING ISSUES FOR SAMPLING CONTAMINATION AREA	1/21/2009
GROUND WIRE NOT MARKED OR SECURED AT BOUNDARY	1/21/2009
440 CORD WITH FEMALE END IS PLACED IN A LOCKING MECHANISM BUT IT ISN'T LOCKED	1/21/2009
Scaffold extends into the contamination area.	1/21/2009
several errors in the annual dosimetry exchange created by the administrators of the dosimetry process	1/22/2009
System Engineering Notebooks - Not completed and/or kept up to date	1/22/2009
25 mrem was assigned to RWP TF-RESPIRATOR	1/22/2009
Waste Box impacted AY-102 MIT	1/22/2009
Some Recycle Items Not Identified in the CCRC Management Plan For 2716-S.	1/22/2009
Fluorensent Tubes Not Handled per CCRC Management Plan.	1/22/2009
Batteries Not Being Accumulated and Stored per CCRC Management Plan	1/22/2009
Training for Management Plan for Recyclable Materials Hanford's Centralized Consolidation/Recycling Center	1/22/2009
AN274-WST-VFD-100 has no active PM and no current work order	1/22/2009
Specialty Assessment FY2009-ESHQ-S-0327 Codes Inconsistently Listed	1/22/2009
Observed janitorial employee restocking paper products	1/22/2009
POR03 exhauster	1/22/2009
Pre-job Not Conducted for Fusion Analytical Process	1/23/2009
Human Performance Improvement Precursors identified during Fusion Analytical Process	1/23/2009
shut down contingency plan not initially incorporated into AN-106 transfer	1/23/2009
Vapor sample probes	1/26/2009
Air flow meters	1/26/2009
Calibrations on air samplers	1/26/2009
Task analysis for personnel performing calibration of radiological instruments	1/26/2009
Training records for persons responsible for calibrating PCM-2 instruments at the 222-S laboratory were not maintained as req	1/26/2009
Data sheets for the calibration of the 2704 HV count room equipment	1/26/2009
Radiological Control Organization as primary technical authority	1/26/2009
Radiological Control notified of tolerance values during calibrations	1/26/2009
Weakness in calibration services provider (PNNL)	1/26/2009

AY/AZ RECIRC. BLDGS	1/27/2009
Procedure ATS-310, Section 1.12 Does not Include Am-241 in its Definition of Equivalent Plutonium.	1/27/2009
DOE Surveillance S-08-ESQ-TANKFARM-006	1/27/2009
Additional Isolated Facility Signs need to be posted at 222-S Complex.	1/27/2009
Tank Farm HRA keys are not maintained	1/27/2009
HRAs are not always posted, physically	1/27/2009
Corrective Actions were not effective for HRAs	1/27/2009
Review of procedure TFC-ESHQ-S_SAF-C-07	1/27/2009
Employee Lost Their Standard TLD	1/28/2009
Employee Lost Their Finger Ring	1/28/2009
Restart of SY exhauster	1/28/2009
Unplanned SY VTP shut down	1/28/2009
Surveys of hard-to-detect (HTD) sampling kits	1/28/2009
Surveying the 2 ton truck out of 241-AW farm	1/29/2009
Electrical hazards inside of cabinets	1/29/2009
Abnormal ordors encountered at C-104 04A tent.	1/29/2009
Ventilation at 702-az side A filter room	1/29/2009
Outside 241-B farm, two spots were found	1/29/2009
Improper removal of an AW lock without the AW present	1/30/2009
IH and HPTs are required to enter to evaluate and identify hazards per TF-AOP-021	1/30/2009
Ensure appropriate number of spotters, flaggers, and other support personnel are assigned to perform safe vehicle movement	1/30/2009
Alpha instrument (PAM) probes efficiencies were identified as being below the acceptable level.	1/30/2009
2 spots of contamination were found reading up to 25,000dpm/100cm2 B/G with no alpha outside C Farm	1/30/2009
air sampler (AS) RAD1027 (SN 5851) to be out of tolerance (OOT) on one range during its routine calibration	1/30/2009
air sampler (AS) RAD 1026 (SN 5694) to be out of tolerance (OOT) on one range	1/30/2009
Valve AW06A-WT-V-606 could not be placed in the desired position to support the 241-AW-106 waste recirculation activity	2/2/2009
272 AW TOOL ROOM AIR SAMPLER STORAGE. LAST AVAILABLE RADECO WAS CHECKED OUT THIS MORNING.	2/2/2009
SY VTP-CP-105 plastic cover does not stay in place over the electrical components	2/2/2009
Filter door on SY B fan are not properly secured	2/2/2009
242 A EVAP. 4th floor pipe has insulation damage	2/2/2009
EAPC WALK DOWN 242 A EVAP, lights need to be relamped.	2/2/2009
Identified hazards of AP-106 pump bump	2/2/2009
Electrical issues with opening cabinets that contain electrical	2/3/2009
Two risers that are not documented on drawings are visible in a 105-AN primary tank video	2/3/2009
EAPC WALK DOWN: Basement area in the Condenser room has several brooms left over from clean up.	2/3/2009
222-S Satellite Accumulation Area Inspection - 1st Quarter 2009	2/3/2009

Workers entering Rad areas need to go through the Rad Con department to find out what kind of coverage	2/4/2009
Qualification and proficiencies programs for the retrieval operation	2/4/2009
EAPC WALK DOWN OF 242 A EVAP HVAC ROOM: Sprinkler head doesn't have enough clearance	2/4/2009
EAPC WALK DOWN: 242 A OFFICE AREA: Missing ceiling tile.	2/4/2009
Transfer line berm erosion issue at 242-A courtyard	2/4/2009
Contamination specs found in RBA	2/4/2009
Evaluate DRUCK instrument for radiological controls	2/4/2009
TLD TW853 was issued and not returned by the end of CY2008	2/4/2009
TLD was issued and not returned by the end of CY2008	2/4/2009
Lights on the panel board (fresh water/gray water) were not functioning	2/5/2009
Liquid came out while performing sample exchange at 241-AN-HMI primary tank exhaust system	2/5/2009
242A Airflow Question	2/5/2009
WRPS will re-evaluate the Ergonomics program during this year	2/5/2009
242 A COURTYARD. Cable extending down from the 4th floor balcony	2/5/2009
242 A First aid kit on SW corner of the building needs to be relocated	2/5/2009
Spec of contamination near B-Farm.	2/5/2009
used electric fork lift charger at 2101-HV facility has a suspectNRTL label and appears to have modifications	2/5/2009
Revise procedure TFC-PRJ-SUT-C-01 to ensure that the procedure is clear	2/5/2009
Inconsistency within Radioactive Source Control procedure leads to non-compliant condition	2/5/2009
understanding the controls that need to be used in the field for proper electrical controls while entering cabinets	2/5/2009
C-110 Retrieval SSWs behavior questioned	2/5/2009
Case DROTT backhoe(REGULATED) #17-19700	2/8/2009
Flange in a cabinet along the north wall of 801AY BLDG	2/8/2009
Portions of the supernatant in tank 241-AN-106 may not comply with AC 5.16, "Corrosion Mitigation Controls	2/9/2009
FINDING: ERRORS FOUND IN C-110 MATERIAL BALANCE CALCULATIONS	2/9/2009
C Farm Change Trailer Radiological Survey Map not up to date	2/9/2009
222-S Radiological Surveillances Review	2/10/2009
IH records discrepancy	2/10/2009
Out of Tolerance Rad Monitoring Equipment CMEBB-0013 (SN-455) and Eberline E-140B	2/10/2009
FH support clean-up of contamination outside all farms needs attention	2/11/2009
This PER is written for automated PAAA/WSH trending purposes only. January 2009 First Aid Case	2/11/2009
FIRST AID – Employee reported slight headache after smelling odor in farm.	2/11/2009
FIRST AID – Employee received contusion to finger when closing lift gate of truck and caught finger in latch	2/11/2009
FIRST AID – Employee was unloading SCBA from van and strained shoulder.	2/11/2009
FIRST AID – While hooking up trailer, employee slipped on ice and received strain to back and pain to knee and elbow	2/11/2009
RECORDABLE – While lifting wood, employee strained back.	2/11/2009

RECORDABLE LOST WORKDAY – Employee slipped on ice while performing routine duties in farm and received multiple contusions	2/11/2009
OBSERVATION: WRPS Management Is Encouraged To Consider Establishing Two Shift Offices and SM OE resources	2/11/2009
Monthly RMA inspections for RMA-033, AW Farm the following was noted.	2/11/2009
Observation - During a tabletop exercise, operations personnel sought permission to stop the transfer pump	2/11/2009
excavation in an URMA outside of C-Farm that the required Radiological Buffer Area controls were not adequately implemented	2/11/2009
All Climbers on Saf-T-Climb Systems Must Tie-off With Shock Absorbing Y-Type Lanyards	2/11/2009
contamination was detected outside the Southeast corner of farm.	2/11/2009
Drawing error identified on H-2-131367 sheet 7	2/11/2009
TMACS Monitor in need of replacement	2/11/2009
THE WEEKLY ROUTINE PACKET 16, 242-A IS LACKING INFORMATION	2/12/2009
While landing the scaffold in the laydown location the riggers pulled the load ~ 3ft. by hand just before landing it	2/12/2009
FH must take action to ensure mobile cranes are properly configured for travel at all times.	2/12/2009
242-A area process monitors	2/12/2009
242-A Condenser Room Air Sampling	2/12/2009
Recommendations of RPP-34096 Rev. 0A	2/13/2009
TFC-ESHQ-S_SAF-C-07, Subcontractor Oversight Rev B-6	2/13/2009
TFC-ESHQ-S_SAF-C-07, Subcontractor Oversight Rev B-6	2/13/2009
Hose-in hose transfer lines (HIHTL) from 241-U-D to 241-SY	2/13/2009
C-104 SHIELD PLUG	2/13/2009
DOE Operational Awareness Report #5539	2/13/2009
Annual routine survey a-007 location #27 { wids 600-269 }	2/13/2009
Radiological areas outside of AZ Farm East fence	2/13/2009
Tank 241 AW 102 Pressure recorder	2/14/2009
Respirator Protection during Painting at 242A	2/17/2009
Specialty Gas Cylinder could not be located	2/17/2009
Chemist received a medical isotope and wore her badge to work	2/17/2009
Deviated from the Site Wide Lock and Lag procedure	2/17/2009
Trash in RBA (near AY-102) needs clean-up	2/17/2009
Ground Wire is Potential Tripping Hazard near 271-AN	2/17/2009
AN-106 supernatant found to be below AC 5.16 chemistry limit	2/17/2009
Excess Wood in 241-AN needs cleaned up	2/17/2009
Grounding wire not connected for construction Light Plant	2/17/2009
LEAK DETECTION CORD IN AN 03C PIT	2/17/2009
AN EDS DP 105 needs to have the latch repaired	2/17/2009
5 spots of contamination were found in soil around HCA boundaries in S farm CA	2/18/2009
RSRs failed to document completion of one or more task description items	2/18/2009
Monthly 241-SX HEPA filter survey	2/18/2009
Electrical Circuit overloaded causing breaker to trip	2/19/2009
Step was missed in work package CLO-WO-07-0729 which required engineering approval	2/19/2009

TLD mylar window damaged.	2/19/2009
Need guidance for controlling& applying torque paint	2/19/2009
Outdated regulator issued for mask station	2/19/2009
JLG Upper Lift Cylinder Pin Inspections	2/19/2009
SOFTWARE QUALITY ASSURRANCE INSPECTION	2/19/2009
SOFTWARE QUALITY ASSESSMENT SQA-05	2/19/2009
SOFTWARE QUALITY ASSESSMENT SQA-F3	2/19/2009
SOFTWARE QUALITY ASSESSMENT SQA-F4	2/19/2009
SOFTWARE QUALITY ASSESSMENT SQA-01	2/19/2009
SOFTWARE QUALITY ASSESSMENT SQA-O2	2/19/2009
SOFTWARE QUALITY ASSESSMENT SQA-O3	2/19/2009
SOFTWARE QUALITY ASSESSMENT SQA-O4	2/19/2009
SOFTWARE QUALITY ASSESSMENT SQA-F2	2/19/2009
SOFTWARE QUALITY ASSESSMENT SQA-O6	2/19/2009
SOFTWARE QUALITY ASSESSMENT SQA-O7	2/19/2009
SOFTWARE QUALITY ASSESSMENT SQA-O8	2/19/2009
SOFTWARE QUALITY ASSESSMENT SQA-O7	2/19/2009
SOFTWARE QUALITY ASSESSMENT SQA-O7	2/19/2009
Slipping Hazard in 272WA Garage	2/19/2009
242A SM Qualification Card has out of date references	2/19/2009
Evaluation of PCB-1B's for Electrical Hazards	2/19/2009
PCM-1B Inspection Requirements	2/19/2009
Legacy Contamination found outside of C-Farm	2/19/2009
AP annulus record sample low flow	2/19/2009
Structural Analysis of the AY-102 Multi-Probe Corrosion Monitoring System	2/19/2009
C-110 Retrieval without IHT monitoring	2/19/2009
EAPC WALK DOWN: Light plant needs to be grounded at AN-Farm	2/21/2009
EAPC WALK DOWN: Connecters for cords stored by 01A-AN Pit tent are in the dirt	2/21/2009
Split 480V cord at AN04A pit	2/21/2009
EAPC WALK DOWN: Fixed Contamination sign is coming off for FCA-E-06-032	2/21/2009
Oil spill at AN-273 air compressor building	2/21/2009
EAPC WALK DOWN: Excess equipment stored in the AN control room	2/21/2009
ALARA Concern on GEA Containment Tent	2/23/2009
Review of radiological survey reports	2/23/2009
Operating Procedures for the 242-A Evaporator were Found to Erroneous	2/23/2009
HPTs discovered an un-posted RA	2/24/2009
242A Evaporator MCS multiple "Input Bad" alarms recieved.	2/24/2009
A-09-AMENS-TANKFARM-001-F01	2/24/2009
AW Farm instrument air	2/24/2009
Transfer line coming from the NE end of the 244AR	2/24/2009
Drain lines DR-361, DR-369 and DR-713 are not designated as RCRA compliant	2/25/2009
Survey of walking path from vehicles to the change trailer	2/25/2009
242-A annual CAM functional check	2/25/2009
Air sampler could have been out of tolerance (OOT) during use	2/25/2009
Materials not allowed to be on the truck unless bagged tagged and labeled	2/25/2009
Contamination found outside of established CA near SY Farm	2/25/2009
Perimeter survey of SY Farm	2/25/2009

Assessment on the Permit Required Confined Space Program	2/25/2009
Assessment on the Permit Required Confined Space Program	2/25/2009
Assessment on the Permit Required Confined Space Program	2/25/2009
Sink hole around Airlift Circulator (ALC) on AY-101 Riser-025	2/25/2009
Assessment on the Permit Required Confined Space Program	2/25/2009
Waste Transfer Zone near C-104 was found to be less tahn required 15 feet in two locations	2/26/2009
Suspect /Counterfeit valves discovered at AVS	2/26/2009
Open bags of trash in yellow bags were found inside the tent that was not posted as a CA	2/26/2009
242A diesel generator monthly PM missed Jan. 2009	2/26/2009
PAPR MASK WOULDN'T SEAL ON USER'S FACE	2/26/2009
241-EW-151 Catch Tank Breather Filter Failed Annaul Aerosol Test	2/26/2009
Wrong Hold Point Signed Off While Performing Package CLO-WO-08-0108 for C-104B Pit Pumpout	2/27/2009
Improper Storage of Combustibles at 2752E	2/27/2009
Lack of Formal Control of External Procedural Documents	2/27/2009
Revision to RWP WTO-0165 Not Implemented Per Procedure	2/27/2009
Staplex Air Sampler Found Out Of Tolerance	2/27/2009
Staplex Air Sampler Found Out Of Tolerance #21716	2/27/2009
204-AR RMAs	2/27/2009
Damaged concrete electrical penetration cover identification # BOE-08-326-02	2/27/2009
RMA-158 Rudy cart H0-64-5483	2/28/2009
RMA-064: HO-64-5484 (Rudy Cart)	2/28/2009
Rad Con approvals for Reqn 00182095	3/1/2009
702-AZ stack CAM Vacuum Pumps not switching	3/1/2009
The farm lighting in the East Area tank farms is inadequate	3/2/2009
RMA-010	3/2/2009
WEEKLY SURVEYS: RADIATION AREA around a camera port	3/2/2009
Walkdown of Lockout/Tagout identified discrepancy	3/2/2009
AW WEEKLY ROUTINES: East side of the old exhauster Radiation Area boundary	3/2/2009
AW-106 Recirc Procedure review	3/2/2009
Contamination specks found outside AZ farm contamination area boundaries,	3/3/2009
Areas for improvement were noted for the leak detector alarm recovery actions	3/3/2009
Delay in Performing Required S-302 Breather Filter Analyses	3/3/2009
Poor Housekeeping in AW-106 Recirculation AW-271 Control Room	3/3/2009
AP farm vehicle access gate along the South East corner could easily be opened without an access key	3/3/2009
Anchoring trailers and mobile offices	3/3/2009
RPP-CALC-24469 "Load Study for 242A" deficiencies	3/4/2009
RWP TF-001 applicability	3/4/2009
Out Of Tolerance Air Sampler (AS9001)	3/4/2009
Subcontractor Safety Inspection Requirements	3/4/2009
Due dates from Corrective Action Plans issued to DOE to address findings from monthly assessments are not being met and	3/5/2009
241-AN- A train primary exhaust record sampler system work questioned	3/5/2009
AW K-2 stack flow reads below range on operator rounds	3/6/2009

Chevy water truck for AW leak detectors	3/7/2009
Damaged cord in 272-AW garage RMA	3/7/2009
Specialty Assessment, FY2009-ESHQ-S-0326 Finding 01: TFRCM Article 554.7 Large area wipes	3/9/2009
Specialty Assessment, FY2009-ESHQ-S-0326, Finding 02: Radiological surveys	3/9/2009
Specialty Assessment, FY2009-ESHQ-S-0326, Observation 01: TFRCM 551.8 is identified by HNF-MP-5184	3/9/2009
Specialty Assessment, FY2009-ESHQ-S-0326, training large area wipes	3/9/2009
HPT discovered two insulators where sent into sy-farm to take measurements on equipment with-out hpt coverage.	3/9/2009
Work crew in AW farm response to HPT direction questioned	3/9/2009
Duplicate of issue in PER-2009-0366	3/9/2009
Release of IHT air samplers for offsite calibration questioned	3/9/2009
Material Balance Discrepancy (MBD) during the 241-AW-106 waste recirculation transfer required re-baseling	3/10/2009
Link to the Base Operations Radiological Source Term document, RPP-26188, on the WRPS RadCon home page opens wrong revision	3/10/2009
Shift Operations Manager Dome Loading Controls Knowledge Deficiencies	3/10/2009
Boxes of Surgeons Gloves Barrier Max were received from vendor expired by over a year	3/10/2009
Suspect Counterfeit - two 1/4 in x 4 in grade five mounting bolts	3/10/2009
TREND ONLY - FIRST AID - Employee slipped off truck step, rolled right ankle	3/10/2009
TREND ONLY - FIRST AID – Employee experienced headache after smelling odor in tank farm	3/10/2009
FIRST AID – While walking in farm employee strained knee	3/10/2009
BASE OPS: 222-S Laboratory, Lab Maintenance – FIRST AID Employee slipped	3/10/2009
FIRST AID – Employee Experienced Headache after possible exposure while changing filter	3/10/2009
222-S Laboratory, Operations – FIRST AID – Employee experienced knee pain after kneeling	3/10/2009
222-S First Aid case	3/10/2009
AN-01A-5-6-15 jumper discovered a tamper seal and safety wire attached to the screwed cap broken	3/10/2009
Leak Detector probe not in correct configuration	3/10/2009
Obtain several more reliable heat sensor guns for checking steam traps	3/11/2009
24 volt diesel battery exploded	3/11/2009
Results of DOE surveillance of WRPS Response to Abnormal Events	3/11/2009
Results of DOE surveillance of WRPS Response to Abnormal Events	3/11/2009
Reviews and controls for Safety Significat Components	3/11/2009
Numerous exterior lights not working at the 702AZ facility	3/11/2009
HASQARD Assessment improvement Recomendations	3/12/2009
Skil electric drill model 763 (3/8 " electric drill) to drill a hole, the handle on the drill shattered	3/12/2009
Open containers, one with liquid, found improperly stored, labeled, and/or packaged	3/12/2009
Project W-314 leak detection system	3/13/2009
P Card manager monthly reconcilation.	3/13/2009

Sump Pumps Fabricated to support C-104 retrieval	3/13/2009
242-A disconnected from receiving leak detection alarms	3/13/2009
Fabrication records for welding, inspections and testing missing	3/13/2009
Contamination found on the BX-106 breather filter riser.	3/15/2009
Listed AP-104 Reportable Quanities need updating	3/16/2009
Identified potential for non-occupational dose to TLD	3/16/2009
M0-979: Construction HPT Trailer. Sheet Metal siding on the eastside is coming loose	3/16/2009
M0-979: Daisy chain power strips found at the Aces station	3/16/2009
Faded and cracked rad sign	3/16/2009
More lighting needs to be replaced	3/16/2009
Indentified SHMS Cabinet that needs labeled	3/16/2009
Housekeeping issues at the bottom of the stairs in the 204-AR contamination area	3/16/2009
Small containers of oil were left after testing in the instrument shop	3/16/2009
DAISY CHAINED POWER STRIPS LOCATED IN THE Pipefitters office area	3/16/2009
Adverse trend was identified pertaining to radiological routine surveillance	3/16/2009
M0-511 HAS A BROKEN PLUG-IN COVER	3/16/2009
Number of incidents reported exceeded statistcal limits in November and December	3/16/2009
Commercial Grade Item (CGI) Upgrade Dedication procedure	3/17/2009
Rubber carpet trim is coming loose	3/17/2009
Two chairs left out the east side of MO-266	3/17/2009
Deteriorating insulation on the west side of 272AW	3/17/2009
Old swamp cooler located on the NW end of 272AW is no longer in use	3/17/2009
Storage located in the NE corner of 272AW needs housekeeping	3/17/2009
Radiological survey maps are not maintained as required at C Farm Change Trailer	3/17/2009
AN Farm HPT routines	3/17/2009
Sub-Contractor Service Vehicle Entered Road Closure Area Without Authorization	3/17/2009
DOE-ORP Operational Awareness Report #5922	3/17/2009
DOE-ORP Operational Awareness Report #5922	3/17/2009
DOE-ORP Operational Awareness Report #5922	3/17/2009
DOE-ORP Operational Awareness Report #5914	3/17/2009
DOE-ORP Operational Awareness Report #5914	3/17/2009
DOE-ORP Operational Awareness Report #5922	3/17/2009
242-A Condenser Room had Several Light Fixtures on Each Level with Burned Out Light Bulbs	3/17/2009
Labeling deficiency noted in 242-A Condenser Room	3/17/2009
Question if AY-101 Annulus CAMs are Environmental requirement	3/18/2009
Adjustable Slurry Distributor Assembly	3/18/2009
Crane stopped in the vicinity of overhead energized power lines	3/18/2009
NQA-1 Audit Needed for ATL	3/18/2009
High radiation areas that are created in farms	3/18/2009
242A loss of steam pressure	3/18/2009
ALARA Program Suggestions	3/19/2009
High Background at 4R Release Station at 222-S	3/19/2009
Contamination found at Underground RMA	3/19/2009
EPA issued a Notice of Violation to DOE, ORP	3/19/2009

Process Memo not referred to by number in Evaporator procedures and not USQ'd	3/19/2009
242A MBD observation	3/19/2009
EAPC Quarterly Safety Walkthrough inspection due	3/19/2009
Schedule Resources for EAPC Safety Walkthrough	3/19/2009
Walk downs not completed	3/19/2009
SX-Farm Quarterly Access Control	3/22/2009
242-A Evaporator high pH alarm	3/22/2009
242A Process Upset	3/22/2009
Multiple boxes (8-12) stacked on the floor in office E211	3/23/2009
WRPS Required Reading Web Site	3/23/2009
DOE/RL-92-36 Not Adequately Implemented in TF-AOP-014	3/23/2009
Government vehicle scraped the plastic bumper	3/23/2009
PCM-1B located on the east wall of AY#1	3/23/2009
PCM-1Bs at SY change trailer	3/23/2009
Tracking of Small Work Orders That Affect Analytical Work	3/24/2009
Air sampler serial number 8995 was found out of tolerance (OOT) during calibration in accordance with 6-RM-719	3/24/2009
Air sampler serial number 8999 was found out of tolerance during calibration in accordance with 6-RM-719	3/24/2009
Air sampler serial number 10315 was found out of tolerance (OOT) during calibration in accordance with 6-RM-719	3/24/2009
Air sampler serial number 10321 was found out of tolerance (OOT) during calibration in accordance with 6-RM-719	3/24/2009
air sampler serial number 8502 was found out of tolerance (OOT) during calibration in accordance with 6-RM-719	3/24/2009
Air sampler serial number 8496 was found out of tolerance (OOT) during calibration in accordance with 6-RM-719	3/24/2009
Lapel Air Sampler Rotameter 07-007 was found out of tolerance (OOT) during calibration in accordance with 6-FCD-720	3/24/2009
Radeco Air sampler 272AS019, contamination	3/24/2009
BX-104 breather filter failed its annual aerosol test	3/24/2009
Contamination surveys of posted contmination areas #91 E & N perimeter of SY farm	3/24/2009
Rabbit droppings identified near the S-112 Control Trailer	3/24/2009
Radiological postings outside of Tank Farms	3/25/2009
MISSING OR INCOMPLETE DOCUMENTATION	3/25/2009
HPT surveys in AN Farm	3/25/2009
survey of M&TE equipment	3/25/2009
LDE-207 alarm	3/25/2009
MSA ELITE L mask	3/26/2009
Johnson Controls boiler lost level control.	3/26/2009
Less than Adequate Conduct of Operations at 242-A	3/27/2009
Independent Assessment of Subcontract Management and Oversight - Finding SO-F1	3/27/2009
Independent Assessment of Subcontract Management and Oversight - Finding SO-F2	3/27/2009

Independent Assessment of Subcontract Management and Oversight - Finding SO-F3	3/27/2009
Independent Assessment of Subcontract Management and Oversight - Finding SO-F4	3/27/2009
Independent Assessment of Subcontract Management and Oversight - Finding SO-F5	3/27/2009
Independent Assessment of Subcontract Management and Oversight - Finding SO-F6	3/27/2009
Independent Assessment of Subcontract Management and Oversight - Observation SO-O1	3/27/2009
Observation SO-O2 As an area for improvement, development, staffing and implementation of a limited size core group	3/27/2009
Observation SO-O3 Training and awareness of Buyer Technical Representatives	3/27/2009
Observation SO-O4 Personnel performing Buyer Technical Representative (BTR) responsibilities	3/27/2009
Observation SO-O5 The Training Implementation Matrix per DOE Order 5480.20A dated September 2005 needs to be revised	3/27/2009
Observation SO-O6:C omprehensive assessment of the integration, procedural direction has not been performed since 2002	3/27/2009
Observation SO-O7 Subcontractor oversight plan documentation was observed	3/27/2009
Observation SO-O8 Observation indicated the ATCO shop is presently in use by construction but no formal turnover	3/27/2009
Observation SO-O9 As an area for improvement, actions to screen subcontracts to determine the need for subcontractor oversigh	3/27/2009
Observation SO-O10: Evaluation of Subcontractor Performance evaluations are not performed for some subcontracts	3/27/2009
Observation SO-O11 Several areas of improvement were identified for the Subcontractor Oversight Form	3/27/2009
Observation SO-O12 TFC-ESHQ-S_SAF-C-07, Subcontractor Oversight does not provide frequency or depth of review	3/27/2009
Observation SO-O13 Procedures that support the subcontractor oversight function provide conflicting direction	3/27/2009
Observation SO-O14 TFC-BSM-CP_CPR-C-05, Procurement of Services is unclear whether documents are record mt'l	3/27/2009
Observation SO-O15 TFC-ESHQ-ENV_AP-D-01, Environmental Oversight of Subcontractors, was cancelled in June	3/27/2009
Observation SO-O16 Passport is not recognized as a document 'record' database.	3/27/2009
"Install sluicer in riser #3" of tank C-104, both the leak detector and the sump pump failed test criteria.	3/27/2009
RMA-158 - Two items (PD-206 & PD-207) were not identified as Reusable Contaminated Equipment	3/27/2009
C-Farm – Several equipment items were not identified as contaminated equipment and require evaluation	3/27/2009
inspections PICC has not identified and/or managed contaminated equipment	3/27/2009
RMA-082 - Several equipment items were not identified as contaminated equipment and require evaluation	3/27/2009

WDO Contaminated Equipment Management Program needs to enhance WDO personnels knowledge	3/27/2009
displacer of the U-204 ENRAF has become detached from the wire	3/30/2009
Air Sampler (8498) found out of tolerance	3/30/2009
ACCEPTANCE CRITERIA FOR AN 3/4 " THD HALF-COUPLING WAS NOT MET for SLURRY DISTRIBUTOR FOR AN 01A PIT,	3/30/2009
Air Sampler (10322) found out of tolerance	3/30/2009
Air Sampler (10321) found out of tolerance	3/30/2009
Emergency Response Board in 278AW needs updated	3/30/2009
Exposed screws of old box are potential hazard at 2715AW	3/30/2009
Emergency Responce Board needs updated	3/30/2009
Emergency Lights don't work at South Entrance door at 2715 AW	3/30/2009
Emergency Responce Board at MO-493 needs updateing	3/30/2009
Assessment Observation - Cold Stress Training	3/30/2009
Tank Farm Standard and the ACGIH® are not always in alignment.	3/30/2009
Employee lost finger ring; dose investigation completed. See IODR EST-09-025	3/30/2009
Low-Level Waste has been stored on site at building 616 for longer than one year.	3/31/2009
Contamination survey of worker's hands was not performed upon removal from the glovebag gloves at U Farm	3/31/2009
MOP MBD question at 242-A for 2 hour frequency.	3/31/2009
During a MOP 242-A procedure TO-600-060 was noted to have some confusing note statements	3/31/2009
BO HPT concern about equipment survey out of AN	3/31/2009
IH & HPT DID NOT ATTEND SHIFT BRIEF	3/31/2009
CAM ALARM ON POR-003	3/31/2009
C-104 PIT SPLASH GUARD	3/31/2009
Glovebag procurement process improvement	3/31/2009
peer review of waste designations performed by Waste Technical Services process improvement	3/31/2009
242-A DATA SHEET ISSUES	3/31/2009
Specialty Assessment FY2009-OPS-S-0301 proper record storage at end of shift	3/31/2009
Specialty Assessment FY2009-OPS-S-0301 final disposal of waste should be included in the PIN files	3/31/2009
Specialty assessment FY2009-OPS-S-0301 include instructions updating container tracking record	3/31/2009
Assessment FY2009-OPS-S-0301 Change TFC-PLN-33 to require inclusion of the SWITS 310 report	3/31/2009
Emptying of anti-foam residue to the floor drain PCA'd out of procedure	4/1/2009
Enviromental PMS performed with suspect M&TE DRUCK Pressure Calibrator	4/1/2009
Clarify how to obtain the "unmetered flow" for a controlled 242-A pot dump.	4/1/2009
Weekly radiation/contamination surveys require entry into the SHMS cabinets	4/1/2009
During performance of Tank Farm Material Balance the 102-AW tank level was inadvertantly transposed	4/1/2009
Temporary rope used to post a SCA on the east side of AZ was found down	4/1/2009
AY#1 Low Level waste trailer has a hood and extra material that needs to be cleaned up	4/1/2009

SURVEY OF 241-B PERIMETER, DISCOVERED TWO DIFFERENT LOCATIONS OF CONTAMINATED TUMBLWEED FRAGMENTS	4/1/2009
Vehicle bridge plates in AY farm need engineering analysis	4/1/2009
Missed annual calibration on AN Exhauster de-entrainer instruments	4/1/2009
RMA adjacent to TX farm not labeld or in system	4/2/2009
Environmental inquiry for OSD-T-151-00007 primary tank waste level exceedance in a AY tank.	4/2/2009
105-AW transmitter enclosure blown down controls questioned	4/2/2009
PVC TOP HAT -VIDEO PORT- ON TANK 101-AZ NEEDS TO BE REWRAPTED WITH PLASTIC	4/2/2009
VTP in 241-AN and 241-AW tank farms, a process improvement for validating radioactive air emissions data	4/2/2009
AN/AW ventilation PLC resets	4/2/2009
exhausters [296-A-44 & 296-A-47] still input flow data when shut down	4/2/2009
PROBLEM STATMENT: UNQUALIFIED PERSONNEL ARE SURVEYING OUT ITEMS	4/2/2009
The 241-UX-302 Delta HAZOP identified that the proposed compressor for pressurizing the Polar Tanker	4/2/2009
SY101 WST PDIT 210	4/4/2009
SY103 WST PDIT 232	4/4/2009
SY102 WST PDIT 222	4/4/2009
SY-A, PB-3140 lamp test UNSAT, and 271-SY alarm panel lights are burnt out.	4/4/2009
SY241 VTP PDI 433 PREFILTER	4/4/2009
Alarm panels D and E at 242-S require relamping	4/4/2009
TK 105 Annulus Intake Pressure Gage	4/5/2009
Filtered raw water valve A-8 in 242-A AMU Room is fully closed but is leaking by	4/6/2009
Retrieval & Closure (RMA-067 and 392) contain cardboard boxes being used as storage for items	4/6/2009
240-S-302 Lessons Learned to be entered into the 241-UX-302A Operational Check	4/6/2009
Process a major revision to TFC-PRJ-PM-C-27 to comply with the requirements of WRPS Assessment Program	4/6/2009
Observation 1TFC-0504-FCDMP-0018, Workplace Air Monitoring Standards, the technical basis for TOC air monitoring	4/6/2009
Observation 02: The BO East air monitoring program does not include identification of the person collecting the sample	4/6/2009
Observation 03: DOE G 441.1-1C recommends that procedures be in place to perform air flow studies	4/6/2009
As an action in the 242-A Corrective Action Plan, Engineering committed to modifying the format of Technical Evaluations	4/6/2009
Observation 04: Quality Records, including air sample counter logs, lapel air sampling work sheets,etc. were not reviewed	4/6/2009
Finding 09-OPS-M-105-F1: Engineering and potentially other Subject Matter Expert (SME) involvement is not adequately defined	4/6/2009
Finding 09-OPS-M-105-F2: The term SME is not adequately defined in the work planning process.	4/6/2009
Finding 09-OPS-M-105-F3: The Work Planning Templates are not under configuration control.	4/6/2009

Observation 09-OPS-M-105-O1: Completing Worksite Hazard Analysis Form	4/6/2009
Observation 09-OPS-M-105-O2: Clarify where work scope boundaries/limits are defined	4/6/2009
Observation 09-OPS-M-105-O3: Comprehensive review of all hazards analyzed and controls implemented not specified	4/6/2009
Observation 09-OPS-M-105-O4: Ensuring controls remain in effect as long as hazard exists	4/6/2009
Observation 09-OPS-M-105-O5: Update reference to manager of work control position	4/6/2009
Observation 09-OPS-M-105-O6: Retain Work Order Planning Checklist and Operations Pre-Release Checklist	4/6/2009
Observation 09-OPS-M-105-O7: Update reference location of lessons learned database	4/6/2009
Current listing of JRG chairs and members it appears that none have finished JRG qualification cards	4/6/2009
NON-HPT PERSONNEL WERE FOUND NOT AWARE OF SURVEY REQUIRMENTS	4/6/2009
Maintenance for company owned bicycles	4/6/2009
C-104 "Fabrication of 04B Pit Work Deck & Spray Ring Modifications"	4/6/2009
241-AW-02E work order TFC-09-0741 Valve 107 may be difficult to lock and tag	4/7/2009
2008 Annual Fix Contamination Area (FCA) Routine Surveys, noted that the following FCA's were not surveyed:	4/7/2009
AN farm RMA-045 has a huge pile of electrical waste not properly packaged in accordance to T0-100-052 5.1.	4/7/2009
AN Farm Conex housekeeping issues	4/7/2009
Air Sampler (#8484) found out of tolerance	4/7/2009
Untimely entry into AOP's for POR-003 Exhauster Shutdown	4/7/2009
STANDING ORDER INDEX NOT MAINTAINED	4/7/2009
CAM STROBE ALARM ACTIVATED	4/7/2009
Sand build-up along T-Farm fence	4/7/2009
Potential safety issue at AN Change Trailer Steps	4/7/2009
the 241-A-104 (Open Face) breather filter failed its aerosol testing under work document TFC-WO-09-1056.	4/7/2009
RMA inspections in AN Farm RMA-045 the following was noted.	4/7/2009
241-A-105 (G-1) breather filter failed its aerosol testing under work document TFC-WO--09-1057.	4/7/2009
241-A-106 (open face) breather filter failed its aerosol testing under work document TFC-WO-09-1058.	4/7/2009
During perfromance of TFC-09-1099, a fitter received several drops of steam condensate on his face while breaking a union	4/7/2009
FWS did not remove their outer layer of gloves before using the phone.	4/8/2009
Make sure that when a large dose is observed on a pencil or other Rad Con equipment notifications are made	4/8/2009
Consider the recommendations from MOP in completing Corrective Action RC-01-1 to SIGPER-2008-1205	4/8/2009
Incorrect procedure sections referenced	4/8/2009
Vapor Control Zone at Gate Eight Corridor	4/8/2009
Service life of non-metallic flexible jumpers	4/9/2009

PAAA/WSH trending purposes only. March 2009 First Aid Case	4/9/2009
PAAA/WSH trending purposes only. March 2009 First Aid Case.	4/9/2009
PAAA/WSH trending purposes only. March 2009 First Aid Case.	4/9/2009
PAAA/WSH trending purposes only. March 2009 First Aid Case	4/9/2009
PAAA/WSH trending purposes only. March 2009 First Aid Case.	4/9/2009
This PER is written for automated PAAA/WSH trending purposes only. March 2009 First Aid Case	4/9/2009
PAAA/WSH trending purposes only. March 2009 First Aid Case	4/9/2009
PAAA/WSH trending purposes only. March 2009 First Aid Case.	4/9/2009
Postings within the Decontamination Unit and Safety Shower Trailers	4/9/2009
PAAA/WSH trending purposes only. March 2009 First Aid Case.	4/9/2009
PAAA/WSH trending purposes only. March 2009 Recordable/LWD Case.	4/9/2009
EAPC WALK DOWN. AW101 TANK Riser-018 is posted as a radiation area.	4/9/2009
Extended Contamination Area on Cross-Site Line North of 241-AP	4/9/2009
Radiological survey of AY/AZ farm contamination and radiation areas	4/9/2009
Contamination migration from A-Complex	4/9/2009
NO TRIGGER LIMIT ON THE TREND ONLY PER'S	4/9/2009
Conduct a thorough review to verify that WRPS does not procure Tri-Cor waste bags.	4/9/2009
DNFSB Site Representative believes that TWINS should be classified as Level A as defined in the DOE G 414.1-4.	4/9/2009
204-AR Surveys	4/9/2009
Observtion of Weld inspection generated NCR	4/9/2009
ATV colided into parked vehicle	4/9/2009
The alarm panel in the 204-AR control room requires relamping	4/9/2009
Old Rabbit Fecal Pellet found South of 272-S	4/9/2009
AW-01C pit	4/10/2009
Electrical cart has been left in the SW corner of AW farm	4/10/2009
Contamination AREA set-up for sampling	4/10/2009
Temporary Radiation Area	4/10/2009
Tripping hazard left at the old exhauster	4/10/2009
Safety classification listed in CHAMPS	4/10/2009
AW 02C pit	4/10/2009
Contamination migrating outside of C Farm	4/10/2009
T Bar with fixed radioactive contamination	4/10/2009
Valving in cooling water to E-C-1 condenser at the 242-A	4/11/2009
204-AR instrument air compressor is out of service	4/11/2009
AY-102 annulus leak detector ENRAF LDT-151 reads below range	4/11/2009
SSW standing authorization to entry control areas	4/12/2009
Document entry/exit from AOP-015	4/12/2009
Process Improvements to IHT & RC_FWS Qual Cards	4/13/2009
Claricification needed to Process Hazards Analysis	4/13/2009
Corrective Actions to improve to 242A Process Memo	4/13/2009
Engineering Technical Managers have not completed Engineering Technical Manager Qualification	4/13/2009
ERPs and AOPs Do Not Meet the Definition of "Reference Use procedures	4/13/2009
PCM-1bs out of service	4/13/2009

DST VTP Assessment, F-01 Electronic Data Storage	4/13/2009
DST VTP Assessment, F-02 HISI data	4/13/2009
DST VTP Assessment, O-01 DSA performance criteria	4/13/2009
DST VTP Assessment, O-02 Maintenance of BOP items	4/13/2009
DST VTP Assessment, O-03 Cost-effective maintenance of older components	4/13/2009
DST VTP Assessment, O-04, Project Mgmnt cancelled funded projects	4/13/2009
DST VTP Assessment, O-05 System descriptions outdated	4/13/2009
DST VTP Assessment, O-06 Software Quality Assurance	4/13/2009
DST VTP Assessment, O-07 Trending Program needs improvement	4/13/2009
DST VTP Assessment, O-08 NCO Surveillances data recording	4/13/2009
242-A Raw Water Pressure Control Valves	4/14/2009
Less than adequate communications during high risk activity	4/14/2009
AW-102 ALC air compressor may have introduce oil into Evap Feed Tank	4/14/2009
AW101-VTA-PDI-202 (DPI-8) reads below range	4/14/2009
Pipe Temperature Not Within Procedurally Required Range	4/14/2009
242-A 0200 Tank Farm MBD Readings Not Obtained Until 0220 Hours	4/15/2009
Circuit breaker for PB-1 in the closed position with the 242-A evaporator vessel empty	4/15/2009
Outdated "Blood-borne Pathogen Exposure Control Standard" found in the 702-AZ Decon trailer	4/15/2009
Field conditions do not match the released H-14 drawing	4/15/2009
double shell farms AW, SY, and AP also are not tied into TMACs for pressurization or exhauster shutdown	4/15/2009
EAPC walkdown scheduled for 4/9/09 at 242A-Evaporator was not completed	4/15/2009
Tumbleweeds around exhauster piping, change trailer and other areas causing potential fire hazard in SY.	4/15/2009
Inspected RMAs 243, 269, 324, 158 and 064. All these RMAs had RAM tags that had issues	4/15/2009
Raw Water Issues at 242A per TE-09-013	4/15/2009
42 of the 63 identified team leaders are not qualified as assessment team leaders at this time	4/15/2009
Procedures need to be updated to reflect the latest change in organizational structure for new management assignments	4/15/2009
Flex CGB and SO cord needs repaired at SY	4/15/2009
Assessment personnel need to be focused and available the majority of the time when an assessment is conducted	4/15/2009
Outside organizational participation in Independent Assessments is limited and could be increased	4/15/2009
Identify the requirement for the Purge air on the 10 lb steam line at the 242A evaporator.	4/15/2009
Technical editing support needed during the report writing phase of the independent assessments	4/15/2009
Trending Codes in PER may need more coordination to ensure field organizations have the proper codes	4/15/2009
SY-274 building the grounds should be separately connected instead of the current configuration	4/15/2009
Lessons Learned records are currently maintained in the "user" portion of IDMS	4/15/2009

Material is plugged up in the 10lb steam condensate line	4/15/2009
WRPS process for monitoring and analyzing performance data is described in TFC PRJ PC C 11	4/15/2009
assessor needs to have their position description updated to reflect new roles	4/15/2009
Pressure gauge PI-EA-1-5 is currently reading >4 psi with no pressure in the line	4/15/2009
Course Description Reports not accurate	4/15/2009
qualification cards for Courses 350319 and 357319 need to be updated	4/15/2009
Create a "plan of the week" for the QA organization	4/15/2009
Speck of contamination found outside west side of B-farm	4/15/2009
Quarterly walkthrough	4/15/2009
Pre-job briefing at 242-A for work package TFC-WO-09-1521	4/15/2009
Unexpected System Response While Performing TFC-WO-09-1519	4/15/2009
QA SME approval was removed from TFCHAMPS without QA concurrence	4/16/2009
Tennis shoes not substantial foot wear and adequate for the farms	4/16/2009
Evaluate if rad signs on AP doors	4/16/2009
HNF-40686, Revision 0, "Integrated Biological Control Program Services"	4/16/2009
SY change trailer	4/16/2009
Compressor room 241-AP-273 has all lights burned out and emergency lighting is not active.	4/16/2009
Job Specific RWP	4/16/2009
Permit required confined spaces in AP farm are inconsistently posted.	4/16/2009
The 241-AP control room inner door	4/16/2009
RadeCo air samplers	4/16/2009
Annulus stack cam and other cams in the farm are in alarm mode	4/16/2009
Specialty Assessment FY2009-OPS-S-350	4/16/2009
2 missing labels in 242-A Raw Water Service Building	4/17/2009
RMA 434 located next to 702AZ has numerous items in a horse trailer that need to be removed	4/17/2009
Temp labels in T. TX, TY and U farms over 60 days	4/18/2009
IH noise monitoring during 242-A steam startup to steam jets operation	4/18/2009
Routine Radiological Surveys Not Performed in Rooms 4TUV & 4QR	4/19/2009
Activation of an obsolete alarm is poor conduct of operations.	4/20/2009
AW A-Train heat exchanger differential temperature	4/20/2009
WRPS Employee Concern Program assessment	4/20/2009
AY-101 sludge thermocouples	4/20/2009
Temporary shielding for the 241-AZ ENRAF is attached such that it is supported by spay nozzles	4/20/2009
PRV FAILED TO MEET THE DIMENSIONAL REQUIREMENTS	4/20/2009
Component found Out-of-Tolerance during CGI Dedication	4/21/2009
several RAM tags were found to be faded, illegible, or noted as N/A when unknown or not surveyed should have been written	4/21/2009
several RAM tags were found to be faded, illegible, or noted as N/A when unknown or not surveyed should have been written	4/21/2009
several RAM tags were found to be faded, illegible, or noted as N/A when unknown or not surveyed should have been written	4/21/2009
several RAM tags were found to be faded, illegible, or noted as N/A when unknown or not surveyed should have been written	4/21/2009

Clarify Roles and Responsibilities of the WRPS Chemical Management POC regarding the ASL.	4/21/2009
Identify Better Container for Hot Cell Waste Collection	4/21/2009
The '222-S Laboratory Complex Chemical Hygiene Plan' and '222-S Laboratory Chemical Management' Procedures Not Consistant	4/21/2009
EAPC walkdown - platform ladder was observed without an inspection sticker	4/21/2009
AW-101, A POSTED RA RISER WAS FOUND TO HAVE A DOSR RATE OF 100 MR/HR AT ONE / FOOT	4/21/2009
TOP OF THE B VALVE PIT POSTED incorrectly	4/21/2009
CONDUCT OF OPERATIONS DEFICIENCIES IDENTIFIED DURING C-104 HEEL JET PUMP REMOVAL	4/21/2009
IMPROVEMENT IN EMERGENCY RESPONSE ACCESS AT C-FARM IS WARRANTED as written in ORP weekly report	4/21/2009
safety inspections procedure and PER procedure inconsistant	4/21/2009
Tumble weed disposal issue	4/21/2009
241-C-103 G-1 with Extension filter failed aerosol testing	4/21/2009
Finger rings #40705 and 06 were reported lost	4/21/2009
maintenance procedures involveing the application controlling lockouts and tagouts reference wrong procedure	4/22/2009
Contamination specks discovered south of c-farm road	4/22/2009
lack of Requirements that were in the job package WDL-112235	4/22/2009
Equipment obtained for drywell logging have not yet been implemented	4/22/2009
C104 Samples in Room 1-GA Needs Waste Disposal Path	4/22/2009
Two awards to the Pacific Northwest National Laboratory (PNNL) were coded in PassPort as a Safety Code "D"	4/22/2009
Two NFPA-70E Lockout/Tagout requirements were not adequately implemented	4/22/2009
Steel lids with a cam-locking type of handle	4/22/2009
Cables for drywell logging	4/22/2009
Complete the vapor characterization in B and BY farms	4/22/2009
TFC-VAR001 needs to be re-written	4/22/2009
Complete the vapor characterization in B and BY farms.	4/22/2009
Riser elevation for 241-AY-101	4/22/2009
Source and equipment storage for LOW/drywell monitoring	4/22/2009
HPT required reading	4/22/2009
HNF-5183 Article 555.8	4/22/2009
Sample Tubes Used Past 20 Uses as Proscribed in IH-LT-549-150.	4/22/2009
Quality Surveillance Report TF-09-QSR-011	4/23/2009
HPT support of Monthly Exhaust Fan Inspection	4/23/2009
Cathodic Protection Rectifier AY241-CATH-RECT-102	4/23/2009
Rad Con Requirement Review during Pre-Job	4/23/2009
Use of Temporary Shielding Practice	4/23/2009
Monthly Contamination Area Survey results for 241-SX Breather Filters	4/23/2009
Scientific Staff Qualification Requirements contains the incorrect classes for the Nuclear Material Custodian training	4/23/2009
TFC-PLN-61 contains a reference to a 222-S Training Council that is no longer functioning	4/23/2009
222-S Quarterly Satellite Accumulation Area Inspection	4/23/2009

Nonconformance Report for C104 Chem Joint	4/24/2009
Tool Crib Connex left unsecured	4/24/2009
Technical Authority for M&TE	4/24/2009
Radio Annoucement for AOP entry	4/24/2009
Extender survey instrument usage per procedure unclear	4/24/2009
Farm Wind Socks Require Replacement	4/26/2009
air sampler serial number 21730 was found out of tolerance	4/27/2009
air sampler serial number 21724 was found out of tolerance	4/27/2009
Several updates were identified for Course 350096 (Tank Farms Nuclear Criticality Safety)	4/27/2009
An additional requirement needs to be added to the Criticality Safety Engineering Qualification Card	4/27/2009
discovered 20-30 spots of contamination at the old hot semi facility east of 209-e.	4/27/2009
Water Addtion to HVAC Seal Loops	4/27/2009
Opening electrical enclosures	4/27/2009
EJTA's were not completed for staff augmentation/ROS individuals as required by ESHQ-S_IH-C-17	4/27/2009
Train all staff augmentation and ROS managers on the requirements of TFC-ESHQ-S_SAF-C-02.	4/27/2009
Operator Log Book not maintained in a controlled and secure configuration	4/27/2009
ISMS Phase II assessment of HAZ1 Criterion 1 indicated inadequacies in risk ranking for industrial safety and industrial hygi	4/27/2009
TFC-BSM-FPM_PR-CD-04 requires Building Administrators to meet with all new residents to the building within one work week	4/27/2009
Operator log books do not show enough detail.	4/27/2009
Fitness for duty is not documented as a procedural requirement for WRPS.	4/27/2009
Electronic Personnel Dosimeter (EPD), PNNL Barcode Number EDTC1-0126, was issued and used beyond its calibration due date	4/27/2009
PIPE FITTING NOT MARKED PER ASTM STANDARD in AN farm	4/27/2009
TFC-WO-09-0579 A102 Corrosion Probe Checks work intermittent HPT check question	4/27/2009
Chemical technologist inadvertently taped over a workers exhalation valve on his PAPR full face respirator.	4/27/2009
Conduct Of Operations Implementation Plan, TFC-PLN-05 deficiencies in Retrieval and Closure organization	4/27/2009
ready made templates (such as operator aids) that respond to freqently asked questions	4/27/2009
SURVEY PACKET 'RSR' AN FARM ROUTINE HAS AN ERROR.	4/27/2009
Rad Planning HPT Support	4/27/2009
Issues identified with Draft Maintenance Implementation Plan	4/27/2009
Emergency Communication Weakness	4/28/2009
Test Directors (TD) and Operations Engineers (OE) do not possess the same qualifications for conducting a test	4/28/2009
not a sufficient number of qualified personnel in the position of Test Director	4/28/2009
Not a sufficient number of qualified personnel in the position of JTG/JTWG members	4/28/2009

'Conduct of Testing" and "Test Results Report Preparation" do not have instructions to generate lessons learned	4/28/2009
Consideration should be given to assigning a single engineer for universal equipment	4/28/2009
Operational Readiness program has Several opportunities for improvement	4/28/2009
not an effective method for planners to locate Lessons Learned identified in ALARA reviews	4/28/2009
Stop Work for access to 204-AR	4/28/2009
204-AR stop work	4/28/2009
SHIMS CABINET AY-102 TANK, STILL NEEDS TO BE INSPECTED FOR ELECTRICAL SAFETY	4/28/2009
OLD P-28 exhauster needs to be removed	4/28/2009
Unauthorized procurement of Company providied PPE.. I.E Safety Glasses/ Safety Boots forms	4/29/2009
Training issue was identified with one of the HPTs loaned from Base Operations.	4/29/2009
Evaluate requirements for an HRA for work in 219-S.	4/29/2009
TFC-ESHQ-RP-INS does not address the removal of tags, putting the meter back in service	4/29/2009
Resource Assignments for 219-S entry	4/29/2009
HEALTH PHYSICS TECHNICIAN MANAGEMENT PROBLEM	4/29/2009
PSV -EC1-2 pressure relief valve at the 242A evaporator has been manually altered using wire	4/29/2009
Issues with load luggers at west side of ATCO shop building and 242-AC shop building.	4/29/2009
A Radiological Stop Work per article 345 at 219-S	4/29/2009
JUMPER NOT MARKED PER CGI REQUIREMENTS	4/29/2009
Management Assessment (FY2009-RET-M-0117) on Hose-In-Hose Transfer Line Control and Storage issue 1	4/29/2009
Management Assessment (FY2009-RET-M-0117) on Hose-In-Hose Transfer Line Control and Storage issue 2	4/29/2009
Management Assessment (FY2009-RET-M-0117) on Hose-In-Hose Transfer Line Control and Storage issue 3	4/29/2009
Management Assessment (FY2009-RET-M-0117) on Hose-In-Hose Transfer Line Control and Storage issue 4	4/29/2009
ALARACTS could be more fliexible/up-to-date with work being performed in the field to support construction activities	4/29/2009
Management Assessment (FY2009-RET-M-0117) on Hose-In-Hose Transfer Line Control and Storage issue 5	4/29/2009
Construction Management sub-contractor oversight	4/29/2009
Management Assessment (FY2009-RET-M-0117) on Hose-In-Hose Transfer Line Control and Storage issue 6	4/29/2009
Management Assessment (FY2009-RET-M-0117) on Hose-In-Hose Transfer Line Control and Storage issue 7	4/29/2009
Management Assessment (FY2009-RET-M-0117) on Hose-In-Hose Transfer Line Control and Storage issue 8	4/29/2009
Purpose and functions of the WRPS Joint Review Group (JRG) should be reviewed	4/29/2009

Management Assessment (FY2009-RET-M-0117) on Hose-In-Hose Transfer Line Control and Storage issue 9	4/29/2009
several examples lately of poor work scheduling or emergent (higher priority) work	4/29/2009
Recommend that the interface between the Testing Program and Facility modifications be better defined	4/29/2009
TF-AOP-003 Past Periodic Review	4/29/2009
labeling deficiencies were identified at the 242-A evaporator	4/29/2009
worker was observed reaching across the Contamination Area (CA) boundary	4/29/2009
SCBA may be difficult to wear while proceeding through building	4/30/2009
702-AZ Bldg Contamination Problems	4/30/2009
Conduct of RadCon Ops Observation - HPT Turnover	4/30/2009
Conduct of RadCon Ops Observation - HRA Key inventory	4/30/2009
Conduct of RadCon Ops Finding - HRA Keys not matching	4/30/2009
Conduct of RadCon Ops Observation - HRA Lock Type	4/30/2009
Replace 222-S HRA locks as necessary	4/30/2009
Conduct of RadCon Ops Finding - Evap High Rad Controls	4/30/2009
ISMS Phase II Self-Assessment, several items were identified which require further action.	4/30/2009
Conduct of RadCon Ops Observation - HRA Signature sheet	4/30/2009
Modify website to reflect accurate list of qualified Project Managers	4/30/2009
TFC-BSM-STD-08, "Nuclear Facility Project Manager Qualification Requirements," needs to be revised	4/30/2009
A Base Operations Project Manager has not completed his PM Qualification Card.	4/30/2009
A Project Manager from the WTP Support organization has not completed the PM qualification card	4/30/2009
A Project Manager from the WTP Support organization has not completed the PM qualification card	4/30/2009
employee worn his TLD for several hours following an administration of a medical isotope	4/30/2009
Work package planning for 11A-3 hotcell shielded wall plug replacement did not include HRA	4/30/2009
A Project Manager from the Retrieval Closure organization has not completed the PM qualification card	4/30/2009
assessment indicated the lack of a consistent level of understanding of the Project Tailoring process	4/30/2009
Project field files are difficult to locate. Searching for project files is time-consuming and costly	4/30/2009
Test Plan procedure ATS-310 section 1.9 does not use review designators	4/30/2009
Hazard Analysis in not incorporated directly into the procedures	4/30/2009
Management Assessment Report FY2009-OPS-M-0138, Observation 2-1	4/30/2009
Management Assessment Report FY2009-OPS-M-0138, Observation 2-1: Instrument(s)	4/30/2009
Controling Org Lock and Tag Training issues	4/30/2009
Caution Tags on Out of Service Equipment	4/30/2009
Caution Tags installed for 4 plus years	4/30/2009
Controling Org Lockbox location information	4/30/2009

Observation 14-1: Required reading lists for positions without qualification cards could not produce an initial required read	4/30/2009
JPM Chase as its clearing bank for the P-Card system	4/30/2009
Observation 16-1: The V&V process is not always scheduled on the Plan of the Day or Plan of the Week.	4/30/2009
Observation 16-2: The Technical Procedure V&V process is not always effective.	4/30/2009
Procedures without Next Review Date	4/30/2009
Late worker assignment to a maintenance task resulted in significant work delays at 242A.	5/1/2009
HPT Coverage for Corrosion Probe Readings.	5/1/2009
242-S K-1-5-3 Locked Out	5/1/2009
Respiratory Equipment Failure in C-Farm	5/1/2009
Slurry sampling on 4-27 and 4-28	5/1/2009
Light check of SY Farm	5/3/2009
242-A human error trap	5/3/2009
ISMS Phase II assessment - Nuclear Criticality Safety SMP - Facility Safety & Criticality Safety Program	5/4/2009
Waste Transfer Confinement Review Board (WTCRB)	5/4/2009
MOP #09-05-01 of TFC-ENG-FACSUP-P-01	5/4/2009
WRPS should revise drill scenarios to include a chemical attribute	5/4/2009
RADIOLOGICAL STOP WORK	5/4/2009
Effectiveness of Corrective Actions for the Type A Accident Investigation	5/4/2009
Technical changes to Abnormal Operating Procedures.	5/4/2009
Proficiency training on the "Immediate Recovery Work" process for those personnel involved in the process.	5/4/2009
DOE Final Report on the Effectiveness of Corrective Actions	5/4/2009
Ensure personnel are able to recognize procedure non-compliances	5/4/2009
Determine if and when telephone approval is required for the release of minor work	5/4/2009
Level of radiological controls for "Immediate Recovery Work	5/4/2009
Develop industrial hygiene and safety controls	5/4/2009
Consolidate the process for work control	5/4/2009
Limit use of the word "ensure" when developing work documents	5/4/2009
Field Work Supervisor/worker to "Follow applicable sections" of the procedure.	5/4/2009
WRPS should develop and conduct work control process training with shift managers and field work supervisors. S-WC-4-7	5/4/2009
Evaluate the PISA/USQ and causal analysis processes	5/4/2009
Improve the timeliness of final occurrence report submittals	5/4/2009
DOE Final Report on the Effectiveness of Corrective Actions for the Type A Accident - FY2009 Integrated Assessment Schedule	5/4/2009
Length of time the Standing Order will remain in effect	5/4/2009
REVISE V&V CHECKLIST TO REQUIRE TECHNICAL AUTHORITY TO ENSURE CRITICAL TASKS ARE INCLUDED S-RCA-JON-8-1	5/4/2009
9 VALVES IN POR 138 WERE NOT MARKED IAW CGI 03081-1 THRU 9	5/4/2009
INCLUDE CRITICAL TASK GUIDANCE IN TFC-OPS-MAINT-C-01	5/4/2009
241-C-110 TRANSFER SURVEY SHEET SHOULD BE A CONTROLLED DOCUMENT S-JON-9-1	5/4/2009

PROVIDE CORRECTIVE ACTION CLOSURE DOCUMENTATION S-RCA JON-13.1-1	5/4/2009
PROVIDE SHIFT MANAGER/OE DSA CONTINUING TRAINING S-EM-62 OP.1 F-2-1	5/4/2009
WORK EXECUTION LTA (S-EM-62 OP.1 SO-1-1)	5/4/2009
RETRIEVAL OPERATIONS NCO TURNOVER REQUIREMENTS NOT UNDERSTOOD	5/4/2009
AW Farm water service pit has standing water in it.	5/4/2009
ID TAG ON C-104 PRV DOES NOT MATCH DOCUMENTATION - NCR TF-09-NCR-021	5/5/2009
MOP on 272-AW per TFC-BSM-CP_CPR-C-18 Material Receipt, Storage, Issuance, Return, and Excess Control	5/5/2009
ORP Assessment of Industrial Hygiene Program Finding 1	5/5/2009
ORP Assessment of Industrial Hygiene Program Finding 2	5/5/2009
ORP Assessment of Industrial Hygiene Program Finding 3	5/5/2009
ORP Assessment of Industrial Hygiene Program Finding 4	5/5/2009
ORP Assessment of Industrial Hygiene Program Observation 1	5/5/2009
Difference in definitions for minor revisions between TFC-PLN-02 and TFC-BSM-AD-C-01	5/6/2009
ORP FacRep Finding - Required Personal Protective Equipment (PPE) was not worn by two workers	5/6/2009
Timely notification to on-Call ORP FACREP	5/6/2009
AW Change Tlr Rad Staus map conflicted with Field Posting	5/6/2009
Rad Posting on old equipment outside of 241-SX maybe inadequate	5/6/2009
Identified weakness in JRG Process	5/6/2009
ORP Facility Rep's Observation - Ambiguity in Procedural Step for C-104 Turbine Pump Removal Identified	5/6/2009
Self reading dosimeter reported as off scale	5/6/2009
AY/ AZ recirculation buildings doors opened during rounds	5/6/2009
242-A Steam Condensate Lockout Tagout	5/6/2009
Architect engineer provided incomplete and incorrect ECN to WRPS	5/6/2009
Training requirements for SOW for construction services	5/6/2009
6 detectors for AMS 4 CAM are not as ordered.	5/7/2009
Animal (birds or bats) infestation in the 242-T Control Room	5/7/2009
Bag of used anti-contamination laundry was found in RMA 285	5/7/2009
Suspect/Counterfeit Valve Discovered During Receipt Inspection	5/7/2009
AY/AZ recirculation buildings Doors opened for Rounds	5/7/2009
Failed to meet the Certificate of Conformance requirements of CGI 03065-4	5/7/2009
Did not get liquid removed from C-110 slurry pump pit within 24 hrs.	5/7/2009
Opportunity for improvement of the required hazard communication program identified	5/7/2009
Opportunity for improvement of personal noise exposure data identified	5/7/2009
Electrical equipment (Quality Level 0) not inspected listing by a NRTL	5/7/2009
Exterior doors found ajar at 2704HV	5/7/2009
System Health Report Preparation, to require that Problem Evaluation Requests (PERs) be written	5/8/2009
RMA-012 272-AW garage needs housekeeping	5/8/2009
Needed a fall protection plan in work package.	5/8/2009
U-Farm large Soil Contamination Area.	5/8/2009
Maintenance program for Construction rolling stock.	5/8/2009
2704HV doors	5/8/2009

AN01A pit Cover Plate	5/8/2009
NCR No. TF-09-NCR-016.	5/8/2009
NCR No. TF-09-NCR-024.	5/8/2009
P-RC1 was found not labeled in the field.	5/9/2009
AOP-007, Response to Hanford Site Range Fire	5/10/2009
Table-top drill	5/10/2009
TF-OPS-IHT-001 Flammable Gas Surveillance on Double Shell Tanks procedure	5/10/2009
air sampler (AS) 272AS026 (AS026) to be out of tolerance	5/11/2009
air sampler (AS) 272AS005 (AS005) out of tolerance	5/11/2009
Sluicing Manifold NCR during fabrication.	5/11/2009
air sampler (AS) 21716 out of tolerance	5/11/2009
AIR SAMPLER FOUND OUT OF CALIBRATION	5/11/2009
Johnson 2000W, barcode XEWB2-0009, serial number 2510, documenting that this instrument was found OOT	5/11/2009
POR03 inlet butterfly valve replacement needed	5/11/2009
COULD NOT CHECK HOSE DIAMETER	5/12/2009
First aid case - Self Treat	5/12/2009
employee smelled odor in AY Farm	5/12/2009
Employee was opening a box and punctured finger on industrial size staple	5/12/2009
employee was bitten by spider several times.	5/12/2009
employee slipped on step and fell on left knee and left hand	5/12/2009
While scanning a document, employee received laceration to left finger.	5/12/2009
Employee tripped and fell on pavement while walking outside 242T	5/12/2009
APRIL 2009 First Aid Case (at 2750)	5/12/2009
Issues with jumper to be installed in the AY-01a pit	5/12/2009
TO-260-400, Step 5.9.15 is incorrect -- does not required Independent Verfiication	5/12/2009
The AN-106 sample was taken as part TSR recovery plan TF-RP-09-01 and the results are as expected. Recommended corrective ac	5/13/2009
NCR - Weld mapping issues	5/13/2009
Wood pieces with nails sticking out and pieces of metal create a safety hazard	5/13/2009
AN-106 sample results confirm out of limit hydroxide concentrations	5/13/2009
Tuning Solution for Semi-Volatile Organics Analysis Expired	5/13/2009
Suggestions for Improvements in the Industrial Hygiene Program	5/13/2009
Respiratory Filter Change Out Times Not Specified	5/13/2009
Failed to meet Item Identification requirement	5/14/2009
Contamination found on SX-111 radial filter	5/14/2009
Inadequate controls for Tech Evaluation implementation	5/14/2009
Information on Radiologically Controlled Vehicles (RCV) is not readily accessable	5/14/2009
WRPS ISMS Phase II MOP evaluation	5/14/2009
WRPS ISMS Phase II MOP evaluation	5/14/2009
WRPS ISMS Phase II MOP evaluation	5/14/2009
Employee Injury outside of 242A	5/14/2009
242-A Evaporator valve line-up	5/16/2009
Environmental requirements for Work authorization	5/17/2009
Radiological Monitoring During Waste Transfers	5/17/2009
Entry of data entered into ABCASH (stack monitoring data)	5/17/2009
Environmental protection training for supervisors	5/17/2009

Environmental Field Leads do not document their oversight activities	5/17/2009
242-A error in line-up	5/17/2009
Radiological survey schedule and strategy associated with Tank farms quarterly outages	5/18/2009
Qualification card/course requirements for industrial hygiene technicians.	5/18/2009
Revision to RPP-13033	5/18/2009
7-day decay count of three air samples	5/18/2009
Electrical One line diagram (H-14-030009, Sh 1, Rev 11)	5/19/2009
Off scale pencil TLD with unclear dose potential.	5/19/2009
PCA was not complete	5/19/2009
Tank Farms cabinets	5/20/2009
Safety Walkdown at 723 The Parkway	5/20/2009
AW241 VTP LI 480	5/20/2009
Tank AW-101 ENRAF is out of service.	5/20/2009
Battery operated emergency megaphone	5/20/2009
6241-A Building	5/20/2009
SY Farm concrete Utility Trench	5/20/2009
2101HV Maintenance Shop	5/20/2009
Tag secured in place with a tiewrap	5/20/2009
Certificate of Conformance requirements of CGI 03079-4	5/20/2009
Waste management personnel invited to monitor the removal of cover blocks	5/21/2009
Speciality Assessment FY2009-ESHQ-S-0351	5/21/2009
Speciality Assessment FY2009-ESHQ-S-0351	5/21/2009
Speciality Assessment FY2009-ESHQ-S-0351	5/21/2009
Speciality Assessment FY2009-ESHQ-S-0351	5/21/2009
Process for winterization/freeze protection for construction facilities.	5/21/2009
HASQARD Improvements	5/21/2009
Technical authority to approve water additions to SSTs	5/21/2009
URMA contamination was found	5/21/2009
June 2009 EVMS Certification Review	5/21/2009
Drip pan was not under the portable light plant	5/21/2009
Hazard was not identified on the Worksite Hazard Analysis form	5/21/2009
Opportunities to improve work instruction	5/21/2009
Inconsistencies in the TFC-WO-09-0818	5/21/2009
Management assessment (FY2009-ENG-M-0109)	5/21/2009
Reviewing TF-001	5/21/2009
Review Staffing for Support of the Vapor IH Program	5/21/2009
TFC-ENG-FACSUP-C-04, REV B-7, Process Memos Procedure Deficiencies	5/22/2009
TFC-ENG-SB-C-03, REV D-5, Unreviewed Safety Question Process Procedure Deficiency	5/22/2009
Records Management Process Lacks Detail for Handling Process	5/22/2009
Final repository for retired USQ files	5/22/2009
Reevaluation of maintaining completed QSR reports	5/22/2009
Less than adequate Pre-Job could lead to inadequate personnel for job	5/22/2009
Time Limit Criteria missing from Records Management Procedure	5/22/2009
Control of Radiological Control Logbooks	5/22/2009
Non-Functioning RadCon Record Storage	5/22/2009

High Rad Controls for 242A Loadout Room Roll-up Door	5/22/2009
File back-log need to be scanned	5/22/2009
ATCO Shop Jib Crane Hoist Hazard	5/22/2009
Missing Signautes on Notice of Discrepancys (NOE)	5/22/2009
Change of Documents that support 241-AP Increase Liquid Level	5/22/2009
RWP's may contain specific work steps or direction	5/22/2009
SST Integrity Panel - TFC-ENG-FACSUP-C-10, Controls for Dome Loading procedure compliance	5/22/2009
Structures evaluated under "The Analysis or Record (Misc Tanks)", RPP-11803 above their design limits	5/22/2009
Management Assessment of operational readiness process for C-110 Retrieval transfer	5/23/2009
AWVPB-WT-LDE-216 (SL-167 encasement leal detector)	5/23/2009
Alternate method to satisfy the Environmental SMP requirement to monitor the encasement drain for AWVPB-WT-LDE-216	5/23/2009
Waste Services web site has inadequate links and information to support waste management	5/26/2009
TFC-ENG-DESIGN-C-35, Process Hazards Analysis, does'nt include provisions for identification of lessons learned	5/26/2009
222-S ALARA 1st Quarter Report was not issued until May 20th which is five days behind the deadline	5/26/2009
401-AZ Recirc building concerns	5/26/2009
TFC-PLN-033, Waste Managmetn Basis does not reflect the roles and responsiblites for receipt of offunit waste	5/26/2009
TFC-ESHQ-ENV_AP-C-01, NEPA, SEPA, Cultural, and Natural Resources, refers to an outdated 222S Work Control Procedure	5/26/2009
Workers working inside of contamination areas at tank farms were observed with hair worn over protective clothing	5/27/2009
farms workers were observed with hair worn over protective clothing.	5/27/2009
an easier method for Work Planning personnel should be developed to identify Lessons Learned	5/27/2009
No document could be found to totally implement NFPA 801 requirements in the field	5/27/2009
Modify existing Fire Protection procedures	5/27/2009
Various fire protection design requirements not implemented	5/27/2009
During upgrade of PeopleSoft from version 8 to 9 cost adders for Absence and continuity of service were missed for one week	5/27/2009
High risk work package TFC-WO-08-2737 241-AY-101 include many vague work steps	5/27/2009
Opportunity for Improvement" observed during an assessment of the Fire Protection SMP	5/27/2009
workers working inside of contamination areas at tank farms were observed with hair worn over protective clothing	5/27/2009
Opportunity for Improvement" identified by the assessment of the Fire Protection SMP	5/27/2009
alarm from a planned work evolution not responded to by Operations, requiring construction workers evacuate farm	5/27/2009

an "Opportunity for Improvement" identified by the assessment of the Fire Protection SMP	5/27/2009
Criteria for HPT surveys of material from radiological buffer areas are not defined	5/27/2009
an "Opportunity for Improvement" identified by the assessment of the Fire Protection SMP	5/27/2009
PER is for an "Opportunity for Improvement" identified by the assessment of the Fire Protection SMP	5/27/2009
Finance department allocated indirect pool costs to their control account without properly establishing the baseline changes	5/27/2009
specialty assessment of programs developed to implement 10 CFR 835 1102	5/27/2009
an "Opportunity for Improvement" identified by the assessment of the Fire Protection SMP	5/27/2009
Implementation of radiological control measures lack rigor for work in areas with low perceptions of radiological risk	5/27/2009
Decontamination or removal of the equipment would minimize the risk of a contamination spread	5/27/2009
TFC-ENG-CHEM-C-01 Rev A-7, "Process Flowsheets" responsibilities need to be updated in portions of the procedure.	5/27/2009
Assessment of 222-2 entry controls identified opportunities for improvements	5/27/2009
DSA Key Attributes Matrix	5/27/2009
Joint Test Group Member Designation and Approval	5/27/2009
Base Operations ALARA Committee did not conduct a meeting during the fourth quarter of CY 2008	5/28/2009
DST Preventive Maintenance had an altered value for the EV Method	5/28/2009
Actual cost were found in two work packages with WBS element 5.1.1.4.2, "Bargaining Unit Training", with no budget	5/28/2009
Cost for Recover Act scope was discovered in the base Facility and Property Management WBS element (5.1.5.6.4).	5/28/2009
Rule of Performance not consistent with the method the Budgeted Cost for Work Scheduled is calculated.	5/28/2009
Requirements for spotter and flaggers for vehicles traffic in the farms	5/28/2009
Excavation near Underground Radioactive Material Area	5/28/2009
Confined Space Posting at 242-A Diesel Tank Pit	5/28/2009
Pulling or feeding materials through man way.	5/28/2009
ELECTRICAL HAZARD IN AY FARM	5/28/2009
Four sample digests from the SX Barrier project were permaturely discarded to waste	5/28/2009
Sweeping within Contamination Control Areas	5/28/2009
Inactive Waste Site Management	5/28/2009
Incorrectly Fabricated Waste Transfer Jumper	5/29/2009
Recommended improvements to Post-Natural Phenomena Procedures	5/29/2009
Power removed to C-104 Exhauster (POR-03)	5/30/2009
General information in step 2.1.20 of procedure TO-600-030	5/31/2009
Reporting Project/Facility ALARA Goals	6/1/2009
Area around the A-702 Building is cluttered with combustible materials and tumbleweeds	6/1/2009

Base Operations Engineering staff is not consistently implementing procedure TFC-BSM-CP_CPR-C-19	6/1/2009
issues were identified during an assessment of field change notices (FCNs), as evaluated in interoffice memo WRPS-0900872	6/1/2009
TFC-WO-08-2993 found air sampler 272AS019 (AS019) to be contaminated, were unable to calibrate and obtain as found values	6/1/2009
Evaluate the (TFC-ESHQ-RP_RWP-C-03) for clarity and a minumum set of requirements for excavations in RCA'a	6/1/2009
WRPS RadCon program office to determine if the air sample collection time limit needs to be re-evaluated.	6/1/2009
40 CFR 355 may be more appropriately implemented by TFC-BSM-AD-C-04 and HNF-PRO-15333.	6/1/2009
AW VTP B-Train pre-filter differential pressure	6/1/2009
Chemicals ordered on a "cloned" E-BOM, not reviewed by the Chemical Management Program each time they are ordered	6/2/2009
auxiliary hoist wire rope for the 70 ton crane was found to be damaged	6/2/2009
TFC-OPS-OPER-C-31, Communication Guidelines, still referres to "Crash Phones"	6/2/2009
Dosimeter finger rings #42969 and 70 were issued but not used, and then lost	6/2/2009
Base Operations air sampler serial number 9007 out of tolerance	6/2/2009
Base Operations air sampler serial number 9005 found out of tolerance	6/2/2009
Base Operations air sampler serial number 8485 out of tolerance	6/2/2009
Base Operations air sampler serial number 9001 found out of tolerance	6/2/2009
Test Program Specialty Assessment FY2009-PI-S-0309 - Finding 01: Quality Assurance Program Description (QAPD) TFC-PLN-02	6/2/2009
Base Operations Staplex air sampler, serial number 23567, out of tolerance	6/2/2009
Base Operations air sampler serial number 10322 was found (OOT) during calibration	6/2/2009
Portable Ladder annual inspections inconsistent	6/2/2009
Assessment finding 02, Qual Requirements for Test Eng.	6/3/2009
Assessment finding 03, Test Program Documents	6/3/2009
Assessment finding 04, Document unique identifier	6/3/2009
Assessment finding 05, use of "Signature on File"	6/3/2009
Finding 06 from Test Program Specialty Assessment FY2009-PI-S-0309.	6/3/2009
Observation 01 from Test Program Specialty Assessment FY2009-PI-S-0309	6/3/2009
Observation 02 from Test Program Specialty Assessment FY2009-PI-S-0309	6/3/2009
Observation 03 from Test Program Specialty Assessment FY2009-PI-S-0309	6/3/2009
Observation 04 from Test Program Specialty Assessment FY2009-PI-S-0309	6/3/2009
Observation 05 from Test Program Specialty Assessment FY2009-PI-S-0309	6/3/2009
Observation 06 from Test Program Specialty Assessment FY2009-PI-S-0309	6/3/2009
multiple work orders in the ready for planning category that are several years old and may negatively skew the maintenance ba	6/3/2009
HPT coverage during AY corrosion probe readings.	6/3/2009
Observation 07 from Test Program Specialty Assessment FY2009-PI-S-0309	6/3/2009
Observation 08 from Test Program Specialty Assessment FY2009-PI-S-0309	6/3/2009
Observation 09 from Test Program Specialty Assessment FY2009-PI-S-0309	6/3/2009
Observation 10 from Test Program Specialty Assessment FY2009-PI-S-0309.	6/3/2009

Evaluate and update as needed programmatic requirements for tracking and analyzing loads on the CTF structure	6/3/2009
Observation 11 of Test Program Specialty Assessment FY2009-PI-S-0309	6/3/2009
Observation 12 from Test Program Specialty Assessment FY2009-PI-S-0309	6/3/2009
Observation 13 from Test Program Specialty Assessment FY2009-PI-S-0309	6/3/2009
utilizing only one escort vehicle when transporting a crane to C-Farm.	6/3/2009
RBA without the proper PPE	6/3/2009
MISSING RECEIPT DOCUMENTATION AND HART UNION	6/4/2009
Contradiction in the use of Large Area Wipes (LAW)	6/4/2009
Ensure Field Work Supervisors (FWS) are cognizant of the pre-job requirements.	6/4/2009
Reviewing the proper way to wear personal protective equipment	6/4/2009
HPT conducted smears to determine the presence of contamination without donning gloves	6/4/2009
pre-jobs ended without assigning a start time or time to meet at the job location, thereby affecting efficiency of job	6/4/2009
Six bottles of wrong calibration gas for Industrial Hygiene iTX air monitors were received	6/4/2009
individual did not go thru the the proper exit procedure of exiting a contamination area.	6/4/2009
PER is written for trend only purposes and to close the action required by WRPS-ESRB-2009-0063.1.	6/4/2009
BCR Procedure TFC-PRJ-PC-C-12, Rev. E-6, Section 4.1 was not followed	6/4/2009
May 2009 MOP on Grab Air Sampling, interviews were performed to determine RadCon personnel's knowledge of the Grab Air Sampli	6/4/2009
C-104-A Pit turbine pump	6/5/2009
Sleeving was short	6/5/2009
C-108 Camera work -DOE FAC Rep	6/5/2009
ISMS Phase II verification activity	6/5/2009
ISMS Phase II verification activity	6/5/2009
ISMS Phase II verification activity	6/5/2009
ISMS Phase II verification activity	6/5/2009
ISMS Phase II verification activity	6/5/2009
ISMS Phase II verification activity	6/5/2009
RadCon Program interface with ORP	6/5/2009
ISMS Phase II verification activity	6/5/2009
TOC Monthly Report for April 2009	6/5/2009
C-104/AN-101 CGI process execution	6/5/2009
TLD was potentially exposed to medical isotope following an unexpected hospital visit.	6/5/2009
Re-posting AW tank farm to Radiation Area	6/5/2009
AW241-VTP-AC-111 (AW VTP cabinet air conditioner) is in alarm	6/6/2009
Procedure TF-ERP-013	6/7/2009
AW-101 tank ENRAF is O/S	6/7/2009
Tank Farm transfer procedures	6/7/2009
EM-62 evaluation identified weaknesses in the preventative maintenance process implementation	6/8/2009

MBD operator was insufficiently knowledgeable of required actions in the waste transfer procedure	6/8/2009
NCR written on POR178 Manifold (not in service)	6/8/2009
Electronic Dosimeter not operational during radiological entry	6/8/2009
Government vehicle hit post in 2750 parking lot	6/8/2009
Unverified Arc Flash Calculations	6/9/2009
Air Sampling Equipment found contaminated.	6/9/2009
Sand along T Farm Change Trailer Stairs	6/9/2009
Locked Door Found at 272AW on Days	6/9/2009
a contaminated patch of dirt/debris was found in RMA #243 northeast of farm.	6/9/2009
RPP-IP-0732 Tank Farms Emergency Response Organization	6/9/2009
Radiological Control Technician (HPT) On-the-Job Training	6/9/2009
Air sampler serial number 8493 was found out of tolerance (OOT) during calibration in accordance with 6-RM-719	6/10/2009
Air sampler serial number 8498 was found out of tolerance	6/10/2009
Replacement for Fire Panel in 271-AN	6/10/2009
Old AN Change Trailer not in WRPS Property System	6/10/2009
271-AN Control Room may need fire suppression system	6/10/2009
NFPA 801, which requires noncombustible construction in a nuclear facility	6/10/2009
ORP On-call Facility Representative was not informed that a fact-finding meeting was planned	6/10/2009
Work Record entries and Field Change approvals could be improved	6/10/2009
Ludlum / P-11 beta/gamma instrument found at AN farm with an expired calibration date	6/10/2009
Radiological Controls tracking and trending program is not codified in a procedure or other administrative document.	6/10/2009
Potential exists for Radiological Controls performance indicator data to be skewed	6/10/2009
Engineers need Tank Farm specific training on the CGI process	6/10/2009
Scrubbing on AW106 in AW farm	6/10/2009
Action from Executive Safety Review Board (ESRB) Meeting No. 2009-13	6/10/2009
C Farm waste box	6/11/2009
PAAA/WSH trending purposes	6/11/2009
Automated PAAA/WSH trending purposes	6/11/2009
PER is written for automated PAAA/WSH trending purposes	6/11/2009
Safety Advisory in April 2009	6/11/2009
Tank Farms Emergency Response Organization	6/11/2009
Jumper (Purex) head missing Green Tag	6/12/2009
Missed HPT Routine Surveys in SST Tank Farms	6/15/2009
Dispositioning and processesing of PERs	6/15/2009
Orex ppe coveralls	6/15/2009
Contaminated rabbit feces	6/15/2009
Contaminated rabbit feces	6/15/2009
Discovered green granular substance from water supply hose during the demobilization of the AN-106 Caustic Addition activity	6/15/2009
ORP Facility Representative's Monthly Report for May 2009	6/16/2009
Event report for SY farm HEPA failure dated May 28th	6/16/2009

CGI-03081-1 thru 9 for Flow-Tek Valves.	6/16/2009
Fact finding investigation into a (unexpected condition)	6/16/2009
Coveralls for electrical arc flash protection	6/16/2009
Inconsistencies with Fire Permit for 222S Maintenance Annex Roof Work	6/17/2009
Procedure steps incorrectly changed	6/17/2009
Valves on the AP annulus exhaust system need labels	6/17/2009
Management Observation Checklist (MOC) is weak	6/17/2009
AW-01C leak detection pit cover has a weather cover that is not secured over the pit.	6/17/2009
Routine task A-007 URMA radiological surveys	6/17/2009
Removing drain seal assembly from AZ-01A	6/18/2009
Vehicle windshield was damaged/broken	6/18/2009
Employees/functions that require DOT Hazardous Materials Transportation Training	6/18/2009
RO-20 radiation detectors procured by Purchase Order 38084	6/18/2009
Respiratory Equipment control	6/18/2009
Refresher Training - 242-A	6/18/2009
242-A Simulator	6/18/2009
Evaporator Operations Trainees	6/18/2009
Records storage areas	6/18/2009
contaminated tumbleweed fragments were discovered outside the east side of 241-AX	6/19/2009
The most current authorized Rev. 1 (Spreadsheet 1299) was not the one available for lab use.	6/19/2009
No identified procedure for the estimated uncertainty	6/19/2009
No location is identified in Equipment Logs	6/19/2009
Not consistently using either "x of y" page numbering or clear indication of the end of the report	6/19/2009
A significant increase in Cs137 activity in drywell 50-02-05 was noticed	6/19/2009
Subcontractor Oversight Plan (A-6003-991)screening can not be implemented as currently outlined in procedure TFC-ESHQ-S_SAF-C	6/19/2009
List of suggestions for laboratory improvement:	6/19/2009
Stairs accessing platform at C-110 do not have a mid-rail	6/22/2009
Near C-103 a cover plate is hanging by one screw exposing the wire. The wire is not damaged.	6/22/2009
Wood enclosure is falling apart and there are multiple sharp nail tips exposed.	6/22/2009
Cranes, Chain Hoists, Hook Extensions, Lifting Yokes not on Champs	6/22/2009
Issues with alignment of the 3" flex hose which is a part of jumper AN01A	6/22/2009
AP filter bank a person could maneuver in between several installed pipes and equipment and would be in a dose rate of 90 mr/	6/22/2009
2704HV Count Room RSR's Initial Revew's not completed	6/22/2009
Have not completed the characterization / documentation on the DSTs so that we can down post the VCZs	6/23/2009

ENCLOSURE II

Save

Problem Evaluation Request (PER)

WRPS-PER-2008-0001
Closed 10/13/2008 08:30

PER No	Date of Discovery	Time of Discovery (24:00)	Project
WRPS-PER-2008-0001	09/25/2008	10:00	Base Operations

Location

2704HV

How Was Problem Discovered

Maintenance Activity

Description of Concern or Problem

On 9/25/08, Base Operations RadCon received calibration as-found out of tolerance (OOT) reports from Base Operations Maintenance: While performing routine calibrations, Seven (7) Radeco air samplers were discovered to be outside the acceptable calibration tolerance of +10% of the Conventionally True Value (CVT)

The +10% tolerance standard is set by Base Operations Maintenance procedure.

Five (5) of these samplers were not used in the field during the time period between calibrations (92 day cycle).

These five samplers are captured on this PER, additional PERs will be generated for the samplers that were used in the field while outside acceptable tolerances.

The sampler ID's are:
8496 aka RAD-1002, 8485 aka RAD-1015, 8502 aka RAD-1017, 9005 aka RAD-1045, 9006 aka RAD-1046

Listed below is a summary of the "as-found conditions:

8496 aka RAD-1002
OBSERVED CTV DELTA TOLERANCE

5 3.984 -1.016 -25.50%
4 3.349 -0.651 -19.44%
3 2.667 -0.333 -12.49%
2 1.683 -0.317 -18.84%
1 0.73 -0.27 -36.99%

8485 aka RAD-1015
OBSERVED CTV DELTA TOLERANCE

5 3.617 -1.383 -38.24%
4 2.871 -1.129 -39.32%
3 2.054 -0.946 -46.06%
2 1.37 -0.63 -45.99%
1 0.705 -0.295 -41.84%

8502 aka RAD-1017
OBSERVED CTV DELTA TOLERANCE

5 4.43 -0.57 -12.87%
4 3.873 -0.127 -3.28%
3 2.806 -0.194 -6.91%
2 1.821 -0.179 -9.83%
1 0.758 -0.242 -31.93%

9005 aka RAD-1045
OBSERVED CTV DELTA TOLERANCE
6 4.315 -1.685 -39.05%
5 2.349 -2.651 -112.86%
4 1.778 -2.222 -124.97%
3 1.179 -1.821 -154.45%
2 0.707 -1.293 -182.89%
1 0.246 -0.754 -306.50%

9006 aka RAD-1046

OBSERVED CTV DELTA TOLERANCE
6 4.221 -1.779 -42.15%
5 3.36 -1.64 -48.81%

4 2.661 -1.339 -50.32%
3 1.977 -1.023 -51.75%
2 1.161 -0.839 -72.27%
1 0.621 -0.379 -61.03%

These samplers were also outside the tolerance requirement of TANK FARMS RADIOLOGICAL CONTROL MANUAL (TFRCM) HNF-5183, Rev. 1 Chapter 5, Article 555.5, which references the flow tolerance guidance provided in ANSI N42.17B.

This ANSI N42.17B standard specifies that air flow meters, differential pressure indicators, and other devices used to determine volumetric flow rates of air samplers and monitors should be calibrated to within ±15% of the true reading.

Users of these air samplers would have over estimated the true volume of air. Calculations would have been under estimated.

This is a non-conservative condition.

Requirement Not Satisfied	**Source Document Number**
Equipment Identification Number	**System Identification**
	Radiation Monitoring

Immediate actions Taken or Planned

An evaluation of the OOT condition, in accordance with TFC-ESHQ-RP_INS-P-05, REV B-2, was performed to determine significance.

2704HV count room data was reviewed and no evidence found of these samplers being used in the field during the time frame of the calibration cycle.

Recommended Corrective actions

The calibration history for these samplers should be reviewed, as these failure rates were not caused by the expected "wear & tear" of field use.

There's the possibility that these samplers have reached the end of their "life-cycle" and need additional maintenance, such as replacement of parts or total unit replacement.

Originator Contact

I would like to review the the corrective actions at closure to ensure they were effective

Originators Name	**Originators ID**	**Originators Phone**	**Date Initiated**
Wendling, Marc	H0074276	(509) 373-2121	10/02/2008

SHIFT OPERATIONS REVIEW

Title

Radeco air samplers were discovered to be outside the acceptable calibration tolerance

How Discovered		**Agency**	
self-ID prior to event			
Reportability	**SSC Operability**	**Operability Review**	**Comp Measures Req**
Non-Reportable	N/A	N/A	

Describe actions Taken or Recommended

Air Samplers taken out of service and being evaluated for disposal. No further actions for Base Ops SO

SO Reviewer Name	**SO Reviewer ID**	**SO Reviewer Phone**	**SO Review Date**
Strasser, David W	H0075556	(509) 373-2689	10/02/2008

SCREENING

PER Significance Level			
Trend Only			
Independent Assessment Review	**Occurrence Report Number**	**Externally Identified**	
No		No	
Assigned Responsible Manager	**Facilities Rep / SSO**	**Safety Management Rep**	

Tucker, Ron			

Program	Safety Management Program
• N/A	• N/A

PER Screening Comments

FURTHER EVALUATION:
An evaluation is necessary to determine why five air samplers were calibrated, stored for 3 months, and then found out of tolerance (one sampler was out of tolerance by as much as 307%) without having been used in the field. Common factors, such as calibrating technician, M&TE used, and actual process used (i.e. were procedure steps omitted or shortcutted) should be examined.

Records of the two most recent calibrations should be cross-referenced to look for patterns. Records for additional past calibrations should also be reviewed to determine whether some of these air samplers may have chronic calibration problems that may stem from previously undetected malfunctions.

Is there's a possibility that these samplers have reached the end of their "life-cycle" and need additional maintenance, such as replacement of parts or total unit replacement?

Does this PER resolution require a causal analysis or extent of condition? cc: Randy Cook

FURTHER EVALUATION RESCREEN REQUEST -- Tucker, Ron 10/07/2008:

A discussion and review was held with the PER originator and the Base Operations West Instrument Technician Superviosr. Calibration procedures and processes, calibration records, instrument check out logs and vendor information was reviewed. It is reccomended that this PER be screened as trend only.

The PER initiator agrees with this reccomendation.Of the five air samplers discussed in this PER, 2 of these units (RAD1046 and RAD 1045) had undergone their first ever calibration, so the as found readings, while taken per procedure, are not meaningful. As can be seen from the data in the original PER, these units would have been by far the furthest out of calibration had the as found readings meant anything, including the "306%" out of calibration mentioned in the PER. This leaves 3 units of potential concern, RAD1002, RAD1015, and RAD1017.

Checkout logs from the tool crib showed that these units had been checked out from the tool crib for an extended period of time to specific jobs, without being returned to the tool crib. Unit RAD 1002 was originally checked out on 12/5/07 for C-Farm work and was returned on 12/21/07. It was again checked out on 1/3/08 to C-farm work, and returned on 3/6/08. On 3/10/08, it was checked out to C-Farm Vadose work and returned on 4/16/08.

Finally it was checked out on 5/19/08 and returned on 6/6/08. The other two units (RAD1015 and RAD1017) had similar checkout records. Althought this PER indicates that there was no record of field use at the count station, they were checked out a number of times, and were, as a minimum transported multiple times. It is surprising, based on the number of checkouts that occured to job sites that there was no record of field use.The last three calibrations performed on each of the three units were evaluated, no abnormal history of calibration failures was noted.

The vendor information indicates that the brushes should undergo maintenance every 600-700 run hours. The amount of run time on each unit is not available, however it is believed that significant issues with brush wear would be noted during the calibration process.The calibration process and data sheets were reviewed, and there was no indication found of human performance, M&TE or procedure errors.

RE-SCREENING COMMENTS: PER Screening Team agreed to table this PER for an additional day at the request of Rad Con Programs in order provide more time to evaluate the FURTHER EVALUATION response. (nb 10/08/08)

RESCREEN COMMENTS: Downgrade to Trend only as a seperate PER will be issued to evaluate the extended length of tool check-out. Linda Glaman 10/10/08

Causal Code

MGT/Comm/Train	**Human Performance**	**GEMS**	**Equip/Eng/Other**
Failed Barrier	**ORPS Code**	**Functional Area**	**Work Process**
	Not Applicable	Radiation Protection	• Radiological Instrumentation
ISMS	**Consequence Code**		

Perform work within the controls	• Rad Inst - Calibration - Out of tolerances, pass due calibrations, traceability issues, training, problems with procedural processes		
PER Screening Chair	**PER Screening Chair ID**	**PER Screening Chair Phone**	**PER Screening Date**
Brown, Nancy L	H0088797	(509) 373-0992	10/06/2008
PAAA REVIEW			
PAAA Screening	**PAAA Codes**	**Function Codes**	
PAAA, Non-NTS Reportable	• 10 CFR 830.122 (e)(3)	• M&TE (control and calibration)	
NTS Report Number	**NTS Report Date**		
Repetitive / Recurrent	**Programmatic**	**Intentional Violation / Misrepresentation**	
No	No	No	
PAAA Screening Comments			
PAAA Reviewer Name	**PAAA Review Date**		
Anderson, Craig E	10/06/2008		
PAAA Approver Name	**PAAA Approve Date**		
Anderson, Craig E	10/07/2008		
SENIOR MANAGEMENT REVIEW/CONCURRENCE			
TF Operations Morning Leadership Call			
None. Tino Maciuca 10/7/08 None. 10/13/08			
Instructions for Responsible Manager			
Senior Management	**Sr Mgmt ID**	**Sr Mgmt Phone**	**Sr Mgmt Review Date**
Owen, Annette	H0054042	(509) 372-0533	10/13/2008
ATTACHMENTS			
Link to PER			
AUDIT HISTORY			
Change Date	**Auditor**	**Comments**	
10/06/2008 15:44	Brown, Nancy L	'PER Screening Comments' was changed.	
10/06/2008 15:46	Brown, Nancy L	'PER Screening Comments' was changed.	
10/07/2008 08:49	Owen, Annette	Responsible Manager Task Launched by Owen, Annette	
10/07/2008 16:08	Owen, Annette	'PER Screening Comments' was changed.	
10/08/2008 11:11	Brown, Nancy L	'PER Screening Comments' was changed.	
10/08/2008 14:52	Brown, Nancy L	'PER Screening Comments' was changed.	
10/10/2008 11:13	Owen, Annette	'PER Significance Level' was changed from Further Evaluation to Trend Only. 'PER Screening Comments' was changed.	
10/13/2008 08:18	Owen, Annette	'TF Operations Morning Leadership Call' was changed. 'Instructions for Responsible Manager' was changed.	

-- End of Report --
10/13/2008 06:15 PM

Task# WRPS-PER-2008-0001			
E-STARS[R] Report Task Detail Report 10/13/2008 0615			
TASK INFORMATION			
Task#	WRPS-PER-2008-0001		
Subject	Trend; Radeco air samplers were discovered to be outside the acceptable calibration tolerance		
Parent Task#		Status	CLOSED 10/13/2008
Reference		Due	10/14/2008
Originator	^PER Coordinator	Priority	Medium
Originator Phone		Category	PER
Origination Date	10/02/2008 1012	Generic1	None
Remote Task#		Generic2	None
Deliverable	PER Review	Generic3	None
Class	None	View Permissions	Global
Instructions	*No Instructions*		

ROUTING LISTS		
1	Responsible Manager	Inactive
	Review the PER Screening Tab and Senior Manager Review for requested data. Complete the task in E-STARS in accordance with TFC-ESHQ-Q_C-C-01, Problem Evaluation Request.	
	• Tucker, Ron - Assign - Completed with comments - 10/07/2008 1604 *Instructions:*	
	• Tucker, Ron - Assign - Completed with comments - 10/07/2008 1605 *Instructions:* Did you contact the originator about the PER? Document your contact in the response window.	
	• ^PER Screening(Brown, Nancy L) - Assign - Completed - 10/08/2008 1452 *Instructions:*	
	• ^Mgr Review - Review - Withdrawn - 10/08/2008 1538 *Instructions:*	
	• ^PER Screening(Owen, Annette) - Review - Concur - 10/10/2008 1113 *Instructions:*	
	• ^Mgr Review(Owen, Annette) - Review - Concur - 10/13/2008 0818 *Instructions:*	
2	Review Initial PER	Inactive

Task# WRPS-PER-2008-0001	
	Review New PER
	• ^SO(Strasser, David W) - Review - Concur - 10/02/2008 1155 *Instructions:*
	• ^PER Screening(Brown, Nancy L) - Review - Concur - 10/06/2008 1540 *Instructions:*
	• ^Mgr Review(Owen, Annette) - Review - Concur - 10/07/2008 0849 *Instructions:*
ATTACHMENTS	
Attachments	1. Link to PER
COLLABORATION	
COMMENTS	
Poster	Tucker, Ron - 10/07/2008 0410
	Completed
	A discussion and review was held with the PER originator and the Base Operations West Instrument Technician Superviosr. Calibration procedures and processes, calibration records, instrument check out logs and vendor information was reviewed. It is reccomended that this PER be screened as trend only. The PER initiator agrees with this reccomendation. Of the five air samplers discussed in this PER, 2 of these units (RAD1046 and RAD 1045) had undergone their first ever calibration, so the as found readings, while taken per procedure, are not meaningful. As can be seen from the data in the original PER, these units would have been by far the furthest out of calibration had the as found readings meant anything, including the "306%" out of calibration mentioned in the PER. This leaves 3 units of potential concern, RAD1002, RAD1015, and RAD1017. Checkout logs from the tool crib showed that these units had been checked out from the tool crib for an extended period of time to specific jobs, without being returned to the tool crib. Unit RAD 1002 was originally checked out on 12/5/07 for C-Farm work and was returned on 12/21/07. It was again checked out on 1/3/08 to C-farm work, and returned on 3/6/08. On 3/10/08, it was checked out to C-Farm Vadose work and returned on 4/16/08. Finally it was checked out on 5/19/08 and returned on 6/6/08. The other two units (RAD1015 and RAD1017) had similar checkout records. Althought this PER indicates that there was no record of field use at the count station, they were checked out a number of times, and were, as a minimum transported multiple times. It is surprising, based on the number of checkouts that occured to job sites that there was no record of field use. The last three calibrations performed on each of the three units were evaluated, no abnormal history of calibration failures was noted. The vendor information indicates that the brushes should undergo maintenance every 600-700 run hours. The amount of run time on each unit is not available, however it is believed that significant issues with brush wear would be noted during the calibration process.

Task# WRPS-PER-2008-0001			
	The calibration process and data sheets were reviewed, and there was no indication found of human performance, M&TE or procedure errors.		
Poster	Tucker, Ron - 10/07/2008 0410		
	Completed		
	Further Evaluation complete		
TASK DUE DATE HISTORY			
Modified	10/07/2008 0849 - ^PER Coordinator	New Due Date	10/14/2008 1630
Modified	10/07/2008 0849 - ^PER Coordinator	New Due Date	10/14/2008 1630
Modified	10/02/2008 1012 - ^PER Coordinator	New Due Date	10/04/2008 1630
SUB TASK HISTORY			
No Subtasks			
-- end of report --			

Save

Problem Evaluation Request (PER)

WRPS-PER-2008-0003
Closed 10/07/2008 09:00

PER No	Date of Discovery	Time of Discovery (24:00)	Project
WRPS-PER-2008-0003	09/25/2008	10:00	Base Operations

Location

2704HV

How Was Problem Discovered

Maintenance Activity

Description of Concern or Problem

On 9/25/08, Base Operations RadCon received a calibration as-found out of tolerance (OOT) report from Base Operations Maintenance: A Radeco air sampler (# 9007 aka RAD-1047), was outside the acceptable calibration tolerance of +10% of the Conventionally True Value (CVT).

The rotameter was found OOT per Base Operations Maintenance procedure.

Listed below is a summary of the "as-found conditions:
OBSERVED CTV DELTA TOLERANCE
6 4.62 -1.38 -29.87%
5 4.466 -0.534 -11.96%
4 3.395 -0.605 -17.82%
3 2.585 -0.415 -16.05%
2 1.652 -0.348 -21.07%
1 0.791 -0.209 -26.42%

This sampler was also outside the tolerance requirement of TANK FARMS RADIOLOGICAL CONTROL MANUAL (TFRCM) HNF-5183, Rev. 1 Chapter 5, Article 555.5, which references the flow tolerance guidance provided in ANSI N42.17B.

This ANSI N42.17B standard specifies that air flow meters, differential pressure indicators, and other devices used to determine volumetric flow rates of air samplers and monitors should be calibrated to within ±15% of the true reading.

Users of this air sampler would have over estimated the true volume of air. Calculations would have been under estimated by 11.96% to 29.87%.

Requirement Not Satisfied	Source Document Number

Equipment Identification Number	System Identification
9007	Radiation Monitoring

Immediate actions Taken or Planned

An evaluation of the OOT condition, in accordance with TFC-ESHQ-RP_INS-P-05, REV B-2, was performed to determine the significance of the OOT condition.

2704HV count room data was collected and the results of two instances when this sampler was used during the calibration time period (4/30/08 to 7/31/08) were evaluated.

Both samples were zero 0% of alpha and beta DAC's.

Recommended Corrective actions

The calibration history for this sampler should be reviewed, as the failure to maintain calibration tolerance was not likely caused by the expected "wear & tear" of field use.

There's the possibility that this sampler has reached the end of its "life-cycle" and needs additional maintenance, such as replacement of parts, or total unit replacement.

Originator Contact

I would like to review the the corrective actions at closure to ensure they were effective

Originators Name	Originators ID	Originators Phone	Date Initiated
Wendling, Marc	H0074276	(509) 373-2121	10/02/2008

SHIFT OPERATIONS REVIEW

Title			
Radeco air sampler (# 9007 aka RAD-1047), was outside the acceptable calibration tolerance			
How Discovered		**Agency**	
self-ID prior to event			
Reportability	**SSC Operability**	**Operability Review**	**Comp Measures Req**
Non-Reportable	N/A	N/A	
Describe actions Taken or Recommended			
Air Sampler tagged out of service, and will be evaluated for continued use of disposal. No further actions.			
SO Reviewer Name	**SO Reviewer ID**	**SO Reviewer Phone**	**SO Review Date**
Strasser, David W	H0075556	(509) 373-2689	10/02/2008
SCREENING			
PER Significance Level			
Trend Only			
Independent Assessment Review	**Occurrence Report Number**	**Externally Identified**	
No		No	
Assigned Responsible Manager	**Facilities Rep / SSO**	**Safety Management Rep**	
Brannan, Patrick (Brad)			
Program		**Safety Management Program**	
• N/A		• N/A	
PER Screening Comments			
cc: Ron Tucker, Randy Cook (nb 10/06/08)			
Causal Code			
MGT/Comm/Train	**Human Performance**	**GEMS**	**Equip/Eng/Other**
Failed Barrier	**ORPS Code**	**Functional Area**	**Work Process**
	Not Applicable	Radiation Protection	• Radiological Instrumentation
ISMS	**Consequence Code**		
Perform work within the controls	• Contam - Conduct of Ops - Conduct of radiological operations issues identified that resulted in or could potentially result in failure to adequately control contamination		
PER Screening Chair	**PER Screening Chair ID**	**PER Screening Chair Phone**	**PER Screening Date**
Brown, Nancy L	H0088797	(509) 373-0992	10/06/2008
PAAA REVIEW			
PAAA Screening	**PAAA Codes**	**Function Codes**	
PAAA, Non-NTS Reportable	• 10 CFR 830.122 (e)(3)	• M&TE (control and calibration)	
NTS Report Number	**NTS Report Date**		
Repetitive / Recurrent	**Programmatic**	**Intentional Violation / Misrepresentation**	
No	No	No	
PAAA Screening Comments			

PAAA Reviewer Name	PAAA Review Date	
Anderson, Craig E	10/06/2008	
PAAA Approver Name	**PAAA Approve Date**	
Anderson, Craig E	10/07/2008	

SENIOR MANAGEMENT REVIEW/CONCURRENCE

TF Operations Morning Leadership Call

None. Tino Maciuca 10/7/08

Instructions for Responsible Manager

Senior Management	Sr Mgmt ID	Sr Mgmt Phone	Sr Mgmt Review Date
Owen, Annette	H0054042	(509) 372-0533	10/07/2008

ATTACHMENTS

Link to PER

AUDIT HISTORY

Change Date	Auditor	Comments
10/06/2008 15:48	Brown, Nancy L	'PER Screening Comments' was changed.

-- End of Report --
10/13/2008 06:15 PM

Task# WRPS-PER-2008-0003			
E-STARS[R] Report Task Detail Report 10/13/2008 0615			
TASK INFORMATION			
Task#	WRPS-PER-2008-0003		
Subject	Trend; Radeco air sampler (# 9007 aka RAD-1047), was outside the acceptable calibration tolerance		
Parent Task#		Status	CLOSED 10/07/2008
Reference		Due	10/04/2008
Originator	^PER Coordinator	Priority	Medium
Originator Phone		Category	PER
Origination Date	10/02/2008 1104	Generic1	None
Remote Task#		Generic2	None
Deliverable	PER Review	Generic3	None
Class	None	View Permissions	Global
Instructions	*No Instructions*		
ROUTING LISTS			
1	Review Initial PER		Inactive
	Review New PER		
	• ^SO(Strasser, David W) - Review - Concur - 10/02/2008 1215 *Instructions:*		
	• ^PER Screening(Brown, Nancy L) - Review - Concur - 10/06/2008 1547 *Instructions:*		
	• ^Mgr Review(Owen, Annette) - Review - Concur - 10/07/2008 0850 *Instructions:*		
ATTACHMENTS			
Attachments	1. Link to PER		
COLLABORATION			
COMMENTS			
No Comments			
TASK DUE DATE HISTORY			

Task# WRPS-PER-2008-0003			
Modified	10/02/2008 1104 - ^PER Coordinator	New Due Date	10/04/2008 1630
SUB TASK HISTORY			
No Subtasks			
-- end of report --			

Save

Problem Evaluation Request (PER)

WRPS-PER-2008-0004
Closed 01/28/2009 12:15

PER No	Date of Discovery	Time of Discovery (24:00)	Project
WRPS-PER-2008-0004	09/29/2008	12:00	Base Operations

Location

A Farm

How Was Problem Discovered

DOE-ORP

Description of Concern or Problem

During a walked down of contamination area boundaries in 200 east area tank farms facilities by representatives of DOE-ORP they noted that tubleweeds were noted collecting in a pile situated across a contamination area boundary on the road north of A farm near an air compressor.

Requirement Not Satisfied	Source Document Number
TFRCM (HNF-5183) Article 330.6	
Equipment Identification Number	**System Identification**

Immediate actions Taken or Planned

Notified A Farm Management

Recommended Corrective actions

Recommend a TUF with assignment to A farm manager Chris Woehle.

Originator Contact

No

Originators Name	Originators ID	Originators Phone	Date Initiated
Dupaquier, Jim	H0063046	(509) 372-2833	10/02/2008

SHIFT OPERATIONS REVIEW

Title

Tumbleweeds Collecting along a Contamination Area Boundary

How Discovered	Agency
FACREP Surveillance	

Reportability	SSC Operability	Operability Review	Comp Measures Req
Non-Reportable	N/A	N/A	

Describe actions Taken or Recommended

Recommend assigning to Facility Manager for resolution. No additional actions taken or recommended by BO SO.

SO Reviewer Name	SO Reviewer ID	SO Reviewer Phone	SO Review Date
Andrews, Jeffrey E	H0078933	(509) 373-2689	10/02/2008

SCREENING

PER Significance Level	
TUF	

Independent Assessment Review	Occurrence Report Number	Externally Identified	
No		Yes	
Assigned Responsible Manager	**Facilities Rep / SSO**	**Safety Management Rep**	
Woehle, Christopher P			

Program	Safety Management Program

PER Screening Comments

None (nb 10/06/08)

Causal Code			
MGT/Comm/Train	**Human Performance**	**GEMS**	**Equip/Eng/Other**
Failed Barrier	**ORPS Code**	**Functional Area**	**Work Process**
	Not Applicable	Operations	• Field Walk Down
ISMS	**Consequence Code**		
Develop and implement hazard controls	• Housekeeping - LTA housekeeping. Not maintaining facilities in the appropriate state of order and cleanliness.		
PER Screening Chair	**PER Screening Chair ID**	**PER Screening Chair Phone**	**PER Screening Date**
Brown, Nancy L	H0088797	(509) 373-0992	10/06/2008

PAAA REVIEW

PAAA Screening	PAAA Codes	Function Codes	
Not subject to PAAA			
NTS Report Number	**NTS Report Date**		
Repetitive / Recurrent	**Programmatic**	**Intentional Violation / Misrepresentation**	
No	No	No	
PAAA Screening Comments			
PAAA Reviewer Name	**PAAA Review Date**		
Anderson, Craig E	10/06/2008		
PAAA Approver Name	**PAAA Approve Date**		
Anderson, Craig E	10/07/2008		

SENIOR MANAGEMENT REVIEW/CONCURRENCE

TF Operations Morning Leadership Call

None. Tino Maciuca 10/7/08

Instructions for Responsible Manager

Review the PER and determine action required. Complete action and enter statement on TUF tab. 'Complete' the task in E-STARS and 'Close' in accordance with TFC-ESHQ-Q_C-C-01, Problem Evaluation Request.

Senior Management	Sr Mgmt ID	Sr Mgmt Phone	Sr Mgmt Review Date
Owen, Annette	H0054042	(509) 372-0533	10/07/2008

Track Until Fixed (TUF)

Action Taken

Area has been cleaned up and tumbleweeds have been removed.

The following actions have been taken to improve effectiveness of weed control in the tank farm facilities.
1) The pre-emergent herbicide application, which is timing dependant, was applied during the best effectiveness period this last fall and winter to improve effectiveness from past years.
2) Bi-weekly meetings between tank farm and FH vegetation management personnel have been established to improve focus on weed control activities.
3) A new process to off-load tumbleweeds to ERDF was implemented this spring to allow for more timely removal of weeds from the tank farm areas. Previous off-loads took from 1-2 weeks to occur. This new process will allow for off-load in days instead of weeks.
4) Any weeds that germinate this spring/summer that were not killed by the pre-emergent herbicide are being controlled with a contact herbicide as they appear instead of when they are at full growth.

These actions are implemented to improve effectiveness in tank farm weed control.

ATTACHMENTS		
Link to PER		
AUDIT HISTORY		
Change Date	**Auditor**	**Comments**
10/07/2008 08:50	Owen, Annette	Responsible Manager Task Launched by Owen, Annette

-- End of Report --
01/31/2009 06:46 PM

Task# WRPS-PER-2008-0004			
E-STARS[R] Report Task Detail Report 01/31/2009 0646			
TASK INFORMATION			
Task#	WRPS-PER-2008-0004		
Subject	TUF; Tumbleweeds Collecting along a Contamination Area Boundary		
Parent Task#		Status	CLOSED 01/28/2009
Reference		Due	02/03/2009
Originator	^PER Coordinator	Priority	Medium
Originator Phone		Category	PER
Origination Date	10/02/2008 1107	Generic1	None
Remote Task#		Generic2	None
Deliverable	PER Review	Generic3	None
Class	None	View Permissions	Global
Instructions	*No Instructions*		
ROUTING LISTS			
1	Responsible Manager		Inactive
	Review the PER and determine action required. Complete action and enter statement on TUF tab. 'Complete' the task in E-STARS and 'Close' in accordance with TFC-ESHQ-Q_C-C-01, Problem Evaluation Request.		
	• Woehle, Christopher P - Assign - Completed with comments - 01/28/2009 1207 *Instructions:*		
	• Woehle, Christopher P - Close - Closed - 01/28/2009 1208 *Instructions:* Verify the TUF Tab and close the task when complete		
2	Review Initial PER		Inactive
	Review New PER		
	• ^SO(Andrews, Jeffrey E) - Review - Concur - 10/02/2008 1148 *Instructions:*		
	• ^PER Screening(Brown, Nancy L) - Review - Concur - 10/06/2008 1550 *Instructions:*		
	• ^Mgr Review(Owen, Annette) - Review - Concur - 10/07/2008 0850 *Instructions:*		
ATTACHMENTS			

Task# WRPS-PER-2008-0004			
Attachments	1. Link to PER		
COLLABORATION			
COMMENTS			
Poster	Woehle, Christopher P (Alexander, Sandy K) - 01/28/2009 1201		
	Completed		
	Action taken has been entered into PER.		
TASK DUE DATE HISTORY			
Modified	10/07/2008 0850 - ^PER Coordinator	New Due Date	01/30/2009 1630
Modified	10/07/2008 0850 - ^PER Coordinator	New Due Date	02/03/2009 1630
Modified	10/02/2008 1107 - ^PER Coordinator	New Due Date	10/04/2008 1630
SUB TASK HISTORY			
No Subtasks			
-- end of report --			

Save

Problem Evaluation Request (PER)

WRPS-PER-2008-0005
Closed 10/07/2008 09:15

PER No	Date of Discovery	Time of Discovery (24:00)	Project
WRPS-PER-2008-0005	09/29/2008	12:00	Base Operations

Location

C Farm

How Was Problem Discovered

DOE-ORP

Description of Concern or Problem

During a walked down of contamination area boundaries in 200 east area tank farms facilities by representatives of DOE-ORP they noted that tumbleweeds were noted collecting in a pile situated across contamination area boundaries in two locations on the north side of C-Farm.

Requirement Not Satisfied	Source Document Number
TFRCM (HNF-5183) Article 330.6	
Equipment Identification Number	**System Identification**

Immediate actions Taken or Planned

Notified C Farm Management

Recommended Corrective actions

Recommend a TUF with assignment to C farm manager David W. Brown.

Originator Contact

No

Originators Name	Originators ID	Originators Phone	Date Initiated
Dupaquier, Jim	H0063046	(509) 372-2833	10/02/2008

SHIFT OPERATIONS REVIEW

Title

C-farm, Tumbleweeds Accumilating Across Contamination Boundries

How Discovered	Agency
FACREP Surveillance	

Reportability	SSC Operability	Operability Review	Comp Measures Req
Non-Reportable	N/A	N/A	

Describe actions Taken or Recommended

Recommend assigning to Facility Manager. No additional actions taken or recommended. BO SO.

SO Reviewer Name	SO Reviewer ID	SO Reviewer Phone	SO Review Date
Andrews, Jeffrey E	H0078933	(509) 373-2689	10/02/2008

SCREENING

PER Significance Level	
TUF	

Independent Assessment Review	Occurrence Report Number	Externally Identified	
No		Yes	
Assigned Responsible Manager	**Facilities Rep / SSO**	**Safety Management Rep**	
Brown, David W			

Program	Safety Management Program
• N/A	• N/A

PER Screening Comments

None (nb 10/06/08)			
Causal Code			
MGT/Comm/Train	**Human Performance**	**GEMS**	**Equip/Eng/Other**
Failed Barrier	**ORPS Code**	**Functional Area**	**Work Process**
	Not Applicable	Operations	• Field Walk Down
ISMS	**Consequence Code**		
Develop and implement hazard controls	• Housekeeping - LTA housekeeping. Not maintaining facilities in the appropriate state of order and cleanliness.		
PER Screening Chair	**PER Screening Chair ID**	**PER Screening Chair Phone**	**PER Screening Date**
Brown, Nancy L	H0088797	(509) 373-0992	10/06/2008
PAAA REVIEW			
PAAA Screening	**PAAA Codes**	**Function Codes**	
Not subject to PAAA			
NTS Report Number	**NTS Report Date**		
Repetitive / Recurrent	**Programmatic**	**Intentional Violation / Misrepresentation**	
No	No	No	
PAAA Screening Comments			
PAAA Reviewer Name	**PAAA Review Date**		
Anderson, Craig E	10/06/2008		
PAAA Approver Name	**PAAA Approve Date**		
Anderson, Craig E	10/07/2008		
SENIOR MANAGEMENT REVIEW/CONCURRENCE			
TF Operations Morning Leadership Call			
None. Tino Maciuca 10/7/08			
Instructions for Responsible Manager			
Review the PER and determine action required. Complete action and enter statement on TUF tab. 'Complete' the task in E-STARS and 'Close' in accordance with TFC-ESHQ-Q_C-C-01, Problem Evaluation Request.			
Senior Management	**Sr Mgmt ID**	**Sr Mgmt Phone**	**Sr Mgmt Review Date**
Owen, Annette	H0054042	(509) 372-0533	10/07/2008
Track Until Fixed (TUF)			
Action Taken			
Tumbleweeds were removed on Monday October 6, 2008.			
ATTACHMENTS			
Link to PER			
AUDIT HISTORY			
Change Date	**Auditor**	**Comments**	
10/07/2008 08:51	Owen, Annette	Responsible Manager Task Launched by Owen, Annette	

-- End of Report --
10/13/2008 06:15 PM

Task# WRPS-PER-2008-0005			
E-STARS[R] Report Task Detail Report 10/13/2008 0615			
TASK INFORMATION			
Task#	WRPS-PER-2008-0005		
Subject	TUF; C-farm, Tumbleweeds Accumilating Across Contamination Boundries		
Parent Task#		Status	CLOSED 10/07/2008
Reference		Due	02/03/2009
Originator	^PER Coordinator	Priority	Medium
Originator Phone		Category	PER
Origination Date	10/02/2008 1113	Generic1	None
Remote Task#		Generic2	None
Deliverable	PER Review	Generic3	None
Class	None	View Permissions	Global
Instructions	*No Instructions*		
ROUTING LISTS			
1	Responsible Manager		Inactive
	Review the PER and determine action required. Complete action and enter statement on TUF tab. 'Complete' the task in E-STARS and 'Close' in accordance with TFC-ESHQ-Q_C-C-01, Problem Evaluation Request.		
	• Brown, David W - Assign - Completed with comments - 10/07/2008 0858 *Instructions:*		
	• Brown, David W - Close - Closed - 10/07/2008 0900 *Instructions:* Verify the TUF Tab and close the task when complete		
2	Review Initial PER		Inactive
	Review New PER		
	• ^SO(Andrews, Jeffrey E) - Review - Concur - 10/02/2008 1145 *Instructions:*		
	• ^PER Screening(Brown, Nancy L) - Review - Concur - 10/06/2008 1551 *Instructions:*		
	• ^Mgr Review(Owen, Annette) - Review - Concur - 10/07/2008 0851 *Instructions:*		
ATTACHMENTS			

Task# WRPS-PER-2008-0005			
Attachments	1. Link to PER		
COLLABORATION			
COMMENTS			
Poster	Brown, David W - 10/07/2008 0810		
	Completed		
	Tumbeweeds were removed on Monday October 6, 2008.		
TASK DUE DATE HISTORY			
Modified	10/07/2008 0851 - ^PER Coordinator	New Due Date	01/30/2009 1630
Modified	10/07/2008 0851 - ^PER Coordinator	New Due Date	02/03/2009 1630
Modified	10/02/2008 1113 - ^PER Coordinator	New Due Date	10/04/2008 1630
SUB TASK HISTORY			
No Subtasks			
-- end of report --			

Save

Problem Evaluation Request (PER)

WRPS-PER-2008-0006
Closed 10/07/2008 09:00

PER No	Date of Discovery	Time of Discovery (24:00)	Project
WRPS-PER-2008-0006	10/02/2008	10:00	Base Operations

Location

T Farm

How Was Problem Discovered

Radiological Surveys

Description of Concern or Problem

While performing a routine weekly RBA radiological task (COF-W002) in 241-T farm, contamination was found in the soil reading 100,000 dpm/100cm2 beta gamma, with no alpha. See survey #COF-008992.

Requirement Not Satisfied	Source Document Number

Equipment Identification Number	System Identification

Immediate actions Taken or Planned

Notified Radcon management and Operations shift office. Removed contaminated soil and disposed of appropriately.

Recommended Corrective actions

Continue diligence with routine surveys.

Originator Contact

No

Originators Name	Originators ID	Originators Phone	Date Initiated
Stamper, Rhonda L	H0032030	(509) 373-2284	10/02/2008

SHIFT OPERATIONS REVIEW

Title

Contamination specks found in T-farm

How Discovered	Agency
self-ID prior to event	

Reportability	SSC Operability	Operability Review	Comp Measures Req
Non-Reportable	N/A	N/A	

Describe actions Taken or Recommended

Specks posted and later picked up and disposed of. No further actions

SO Reviewer Name	SO Reviewer ID	SO Reviewer Phone	SO Review Date
Strasser, David W	H0075556	(509) 373-2689	10/02/2008

SCREENING

PER Significance Level	
Trend Only	

Independent Assessment Review	Occurrence Report Number	Externally Identified	
No		No	

Assigned Responsible	Facilities Rep / SSO	Safety Management Rep	

Manager			
Ficklin, Jim			
Program		**Safety Management Program**	
• N/A		• N/A	
PER Screening Comments			
None (nb 10/06/08)			
Causal Code			
MGT/Comm/Train	**Human Performance**	**GEMS**	**Equip/Eng/Other**
Failed Barrier	**ORPS Code**	**Functional Area**	**Work Process**
	Not Applicable	Operations	• Radiological Contamination Control
ISMS	**Consequence Code**		
Develop and implement hazard controls	• Contam - Inside Posted Area - Discovery of contamination above table 2-2 levels outside of contamination areas, but inside of areas established for control of contamination. (e.g. inside RBA)		
PER Screening Chair	**PER Screening Chair ID**	**PER Screening Chair Phone**	**PER Screening Date**
Brown, Nancy L	H0088797	(509) 373-0992	10/06/2008
PAAA REVIEW			
PAAA Screening	**PAAA Codes**	**Function Codes**	
Not subject to PAAA			
NTS Report Number	**NTS Report Date**		
Repetitive / Recurrent	**Programmatic**	**Intentional Violation / Misrepresentation**	
No	No	No	
PAAA Screening Comments			
PAAA Reviewer Name	**PAAA Review Date**		
Anderson, Craig E	10/06/2008		
PAAA Approver Name	**PAAA Approve Date**		
Anderson, Craig E	10/07/2008		
SENIOR MANAGEMENT REVIEW/CONCURRENCE			
TF Operations Morning Leadership Call			
None. Tino Maciuca 10/7/08			
Instructions for Responsible Manager			
Senior Management	**Sr Mgmt ID**	**Sr Mgmt Phone**	**Sr Mgmt Review Date**
Owen, Annette	H0054042	(509) 372-0533	10/07/2008
ATTACHMENTS			
Link to PER			

-- End of Report --
10/13/2008 06:15 PM

Task# WRPS-PER-2008-0006			
E-STARS[R] Report Task Detail Report 10/13/2008 0615			
TASK INFORMATION			
Task#	WRPS-PER-2008-0006		
Subject	Trend; Contamination specks found in T-farm		
Parent Task#		Status	CLOSED 10/07/2008
Reference		Due	10/04/2008
Originator	^PER Coordinator	Priority	Medium
Originator Phone		Category	PER
Origination Date	10/02/2008 1137	Generic1	None
Remote Task#		Generic2	None
Deliverable	PER Review	Generic3	None
Class	None	View Permissions	Global
Instructions	*No Instructions*		
ROUTING LISTS			
1	Review Initial PER		Inactive
	Review New PER		
	• ^SO(Strasser, David W) - Review - Concur - 10/02/2008 1217 *Instructions:*		
	• ^PER Screening(Brown, Nancy L) - Review - Concur - 10/06/2008 1552 *Instructions:*		
	• ^Mgr Review(Owen, Annette) - Review - Concur - 10/07/2008 0851 *Instructions:*		
ATTACHMENTS			
Attachments	1. Link to PER		
COLLABORATION			
COMMENTS			
No Comments			
TASK DUE DATE HISTORY			
Modified	10/02/2008 1137 - ^PER Coordinator	New Due Date	10/04/2008 1630

Task# WRPS-PER-2008-0006
SUB TASK HISTORY
No Subtasks
-- end of report --

Save

Problem Evaluation Request (PER)

WRPS-PER-2008-0009
In Process/Work

PER No	Date of Discovery	Time of Discovery (24:00)	Project
WRPS-PER-2008-0009	10/02/2008	13:00	RadCon Programs

Location

OTHER

How Was Problem Discovered

General Observation

Description of Concern or Problem

While preparing for an ORP assessment of sealed radioactive source accountability and controls, a potential weakness was discovered with procedure TFC-ESHQ-RP_MON-C-24, REV E-2, "Sealed Radioactive Source Accountability and Control." Source custodians/delegates are required to attend training every two years, and "the Project radiological control director/manager must designate source custodians and delegates by completing TFC Designation of Source Custodian (A-6003-939)," (Section 4.1, Step 3). Because the procedure does not require updating/resubmitting form A-6003-939 on a periodic basis, it is possible for someone to remain designated as a source custodian/delegate after lapsing on their required retraining. The Radioactive Source Control Company Technical Authority (RSC-CTA) should evaluate this problem for possible improvement.

Requirement Not Satisfied	Source Document Number
	TFC-ESHQ-RP_MON-C-24, Sealed Radioactive Source Accountability and Control

Equipment Identification Number	System Identification
N/A	

Immediate actions Taken or Planned

Discussed with Jim Rolph and documented in this PER.

Recommended Corrective actions

Recommend screening this as a PIE/CIM to Jim Rolph (Radiological Contols).

Originator Contact

I would like to review the the corrective actions at closure to ensure they were effective

Originators Name	Originators ID	Originators Phone	Date Initiated
Hanni, Jon	H2391068	(509) 373-4017	10/02/2008

SHIFT OPERATIONS REVIEW

Title

Weakness was discovered with procedure TFC-ESHQ-RP_MON-C-24, REV E-2, "Sealed Radioactive Source Accountability and Contr

How Discovered	Agency
self-ID prior to event	

Reportability	SSC Operability	Operability Review	Comp Measures Req
Non-Reportable	N/A	N/A	

Describe actions Taken or Recommended

No additional actions taken or recommended by BO SO.

SO Reviewer Name	SO Reviewer ID	SO Reviewer Phone	SO Review Date
Andrews, Jeffrey E	H0078933	(509) 373-2689	10/02/2008

SCREENING

PER Significance Level	
PIE/CIM	

Independent Assessment Review	Occurrence Report Number	Externally Identified	
No		No	
Assigned Responsible	**Facilities Rep / SSO**	**Safety Management Rep**	

Manager			
Rolph, Jim T			
Program		**Safety Management Program**	
• N/A		• Radiological Control	
PER Screening Comments			
None			
Causal Code			
MGT/Comm/Train	**Human Performance**	**GEMS**	**Equip/Eng/Other**
Failed Barrier	**ORPS Code**	**Functional Area**	**Work Process**
	Not Applicable	Radiation Protection	• Radiological Source Control
ISMS	**Consequence Code**		
Perform work within the controls	• Source Control - Program - Identified weakness or oversight in the Source Control program		
PER Screening Chair	**PER Screening Chair ID**	**PER Screening Chair Phone**	**PER Screening Date**
Brown, Nancy L	H0088797	(509) 373-0992	10/06/2008
PAAA REVIEW			
PAAA Screening	**PAAA Codes**	**Function Codes**	
PAAA, Non-NTS Reportable	• 10 CFR 830.122 (d)(1)	• Procedure Quality	
NTS Report Number	**NTS Report Date**		
Repetitive / Recurrent	**Programmatic**	**Intentional Violation / Misrepresentation**	
No	No	No	
PAAA Screening Comments			
PAAA Reviewer Name	**PAAA Review Date**		
Anderson, Craig E	10/06/2008		
PAAA Approver Name	**PAAA Approve Date**		
Anderson, Craig E	10/07/2008		
SENIOR MANAGEMENT REVIEW/CONCURRENCE			
TF Operations Morning Leadership Call			
None. Tino Maciuca 10/7/08			
Instructions for Responsible Manager			
Evaluate suggestion, enter comments and required actions on PIE/CIM tab of the PER. Disposition in accordance with TFC-ESHQ-Q_C-C-01, Problem Evaluation Request.			
Senior Management	**Sr Mgmt ID**	**Sr Mgmt Phone**	**Sr Mgmt Review Date**
Owen, Annette	H0054042	(509) 372-0533	10/07/2008
CAUSE ANALYSIS			
Description of Occurrence			
Extent of Condition			
Safety Significance			

Generic Implications

Remedial Corrective Action

Causal Analysis, Apparent Cause and/or Root Cause Analysis

CORRECTIVE ACTIONS

Actionee	Action Due Date	E-STARS Number
Hanni, Jon	07/15/2009	WRPS-PER-2008-0009.1

Action

Change procedure (TFC-ESHQ-RP_MON-C-24) as indicated in the "Evaluation of PIE/CIM Initiative" field above.

Corrective Action Attachments

- A-6003-939_REV2.docx
- ADCA for TFC-ESHQ-RP_MON-C-24,RevF.pdf
- Extension Request WRPS-PER-2008-0009_ 0024_ 0029.msg
- Form Design Request for A-6003-939.pdf
- Link to PER
- Re_ Extension Request for _WRPS-PER-2008-0009_1_ PERs associated with A-08-ESQ-TANKFARM-010.msg
- TFC-ESHQ-RP_MON-C-24,_Sealed_Radioactive_Source_Accountability_and_Control.doc

PIE/CIM

Evaluation of PIE/CIM Initiative

A meeting was held on December 5,2008 between the company technical authority and facility points of contact for sealed radioactive source control to discuss this PER and other recent PERs associated with the sealed radioactive source program. After reviewing the issue identified in this PER, and noting that a non-compliance has already occurred (WRPS-PER-2008-0016), it was determined that the simplest solution is to change the procedure so that the Project Radiological Control Manager (PRCM) only has to designate the primary source custodian for each source in writing.

The requirement to designate source custodians and delegates is self-imposed, i.e. it was proceduralized but does not flow down from regulatory requirements. The training requirements for source custodians/delegates are Rad Worker I or II and Course 351526 "Source Custodian Training." Each radioactive sealed source is assigned to a source custodian. Beyond identifying the custodian for each source, the self-imposed requirement to designate workers as custodians or delegates does not serve any additional purpose. Therefore, the procedure will be changed to indicate that the PRCM will designate the primary custodian for each source in writing annually, or whenever primary custodianship changes. All other qualified personnel will be considered source custodian delegates by default upon completing the necessary training (Rad Worker I or II and Course 351526).

ATTACHMENTS

Extension Request WRPS-PER-2008-0009_ 0024_ 0029.msg

Link to PER

AUDIT HISTORY

Change Date	Auditor	Comments
10/07/2008 08:52	Owen, Annette	Responsible Manager Task Launched by Owen, Annette
01/22/2009 13:49	Hanni, Jon	Change to Cause Analysis screen/Corrective Action plan.
01/26/2009 14:15	Glaman, Linda R	'Screening Program' was added. 'Screening Safety Managemnt Program' was added.
01/26/2009 14:17	Glaman, Linda R	Corrective actions Launched by Glaman, Linda R
05/13/2009 14:14	Glaman, Linda R	Change to Cause Analysis screen/Corrective Action plan.
05/13/2009 14:15	Glaman, Linda R	extend CA .1 per attached email request. LBG We are fully staffed now and are making good progressing in training and qualifications so I see us improving in this area as well as other in the near future. J Hanni for J Rolph 5-11-09

-- End of Report --
07/08/2009 07:41 AM

Task# WRPS-PER-2008-0009

E-STARS[R] Report
Task Detail Report
07/08/2009 0741

TASK INFORMATION			
Task#	WRPS-PER-2008-0009		
Subject	PIE; Weakness was discovered with procedure TFC-ESHQ-RP_MON-C-24, REV E-2, "Sealed Radioactive Source Accountability and Contr		
Parent Task#		**Status**	Open
Reference		**Due**	07/26/2009
Originator	^PER Coordinator	**Priority**	Medium
Originator Phone		**Category**	PER
Origination Date	10/02/2008 1411	**Generic1**	None
Remote Task#		**Generic2**	None
Deliverable	PER Review	**Generic3**	None
Class	None	**View Permissions**	Global
Instructions	*No Instructions*		

ROUTING LISTS

1	Corrective actions Routing Lis	Active
	To launch Corrective actions.	
	• ^PER CAs - Assign - Awaiting Response - Due Date - 07/22/2009 0000 *Instructions:*	
2	Responsible Manager	Inactive
	Evaluate suggestion, enter comments and required actions on PIE/CIM tab of the PER. Disposition in accordance with TFC-ESHQ-Q_C-C-01, Problem Evaluation Request.	
	• Rolph, Jim T - Assign - Completed with comments - 01/22/2009 1403 *Instructions:* ↳ *Routing List:* Route List - Inactive *Instructions:* • Hanni, Jon - Approve - Approved with comments - 01/22/2009 1350	
	• Rolph, Jim T - Assign - Completed with comments - 01/22/2009 1405 *Instructions:* Did you contact the originator about the PER? Document your contact in the response window.	
3	Review Initial PER	Inactive
	Review New PER	
	• ^SO(Andrews, Jeffrey E) - Review - Concur - 10/02/2008 1414 *Instructions:*	
	• ^PER Screening(Brown, Nancy L) - Review - Concur - 10/06/2008 1608 *Instructions:*	
	• ^Mgr Review(Owen, Annette) - Review - Concur - 10/07/2008 0852 *Instructions:*	

ATTACHMENTS

Attachments	1. Extension Request WRPS-PER-2008-0009_ 0024_ 0029.msg 2. Link to PER

COMMENTS

Task# WRPS-PER-2008-0009

Poster	^PER Coordinator (Owen, Annette) - 12/01/2008 1448
	Extend to 1/31/09 per attached e-mail request.
	"The issues in this PER were identified prior to an ORP assessment (A-08-TANKFARM-010) of the sealed radioactive source control program. A couple more PERs will be written upon receipt of the assessment report from ORP. The source control company technical authority (CTA) has scheduled a meeting with all of the source custodians to discuss all issues that have been identified as part of this assessment and determine the necessary corrective actions. The goal is to consolidate all improvements into one procedure revision instead of several small ones. It is recommended that the deadline for this PER be extended to January 31, 2009 so corrective actions can be identified and procedure/form changes can be worked through the review and implementation processes. Once corrective actions have been chosen, the CTA may elect to roll up all of the source assessment related PERs if necessary."
Poster	Hanni, Jon - 01/22/2009 1350
	Approve
	PIE/CIM Evaluation has been completed and corrective actions identified.
Poster	Rolph, Jim T - 01/22/2009 1403
	Completed
	Task completed
Poster	Rolph, Jim T - 01/22/2009 1405
	Completed
	Complete
Poster	^PER Coordinator (Glaman, Linda R) - 05/13/2009 1415
	Due Date Extension
	extend CA .1 per attached email request. LBG We are fully staffed now and are making good progressing in training and qualifications so I see us improving in this area as well as other in the near future. J Hanni for J Rolph 5-11-09

TASK DUE DATE HISTORY

Modified	05/13/2009 1416 - ^PER Coordinator	**New Due Date**	07/26/2009 0000
Modified	01/26/2009 1417 - ^PER Coordinator	**New Due Date**	04/18/2009 0000
Modified	01/26/2009 1417 - ^PER Coordinator	**New Due Date**	04/14/2009 0000
Modified	12/01/2008 1447 - ^PER Coordinator (Owen, Annette)	**New Due Date**	02/04/2009 1630
Modified	10/07/2008 0852 - ^PER Coordinator	**New Due Date**	12/01/2008 1630
Modified	10/07/2008 0852 - ^PER Coordinator	**New Due Date**	12/01/2008 1630
Modified	10/02/2008 1411 - ^PER Coordinator	**New Due Date**	10/04/2008 1630

SUB TASK HISTORY

Subtask#	WRPS-PER-2008-0009.1				
Subject	WRPS-PER-2008-0009; PIE; Change procedure (TFC-ESHQ-RP_MON-C-24) as indicated in the "Evaluation				
Originator	^PER CAs				
	Routing List	Corrective Action			
		Assignee	Hanni, Jon	**Response**	Completed w/Com
		Assignee	Rolph, Jim T	**Response**	Concur w/Com

Task# WRPS-PER-2008-0009

-- end of report --

Message

From: Owen, Annette
Sent: Monday, December 01, 2008 11:28 AM
To: ^WRPS Corrective Action Group
Subject: Extension Request WRPS-PER-2008-0009, 0024, 0029

From: Brey, K Kristine
Sent: Monday, December 01, 2008 11:09 AM
To: Hanni, Jonathan B; Matarazzo, Laci D; Owen, Annette
Cc: Rolph, James T; Brey, K Kristine
Subject: RE: EXTENSION ON WRPS-ISMS-2008-0005.4, 0029 & 0024

Hi - I am going to forward this to the Corrective Action Management group (Annette Owen), whom I believe can help you with extensions.

The only thing I am helping to track is the ISMS item (WRPS-ISMS-2008-0005.4), and it does not appear that an extension is needed.

Hope this will help you - thanks - K2

Kristine Brey, *Manager*
Laboratory Support Services
373-3076

From: Hanni, Jonathan B
Sent: Monday, December 01, 2008 10:04 AM
To: Matarazzo, Laci D; Brey, K Kristine
Cc: Rolph, James T
Subject: RE: EXTENSION ON WRPS-ISMS-2008-0005.4, 0029 & 0024

The extension requests should apply to:
WRPS-PER-2008-0009, currently due 12/1/08 (today)
WRPS-PER-2008-0024, currently due 12/6/08
WRPS-PER-2008-0029, currently due 12/6/08

The request does not apply to WRPS-ISMS-2008-0005.4 as it is not a PER.

Jonathan B. Hanni
Radiological Controls
2750E/C-113/200 East, MSIN: R1-05
Office: 509-373-4017, Cell: 509-619-3568
Fax: 509-372-1664

washington_river_protection_solutic

From: Matarazzo, Laci D
Sent: Tuesday, November 25, 2008 1:01 PM
To: Brey, K Kristine
Cc: Rolph, James T; Hanni, Jonathan B
Subject: EXTENSION ON WRPS-ISMS-2008-0005.4, 0029 & 0024

Kristine,

I need to extend the following E-Star actions, with the justification of: "The issues in this PER were identified prior to an ORP assessment (A-08-TANKFARM-010) of the sealed radioactive source control program. A couple more PERs will be written upon receipt of the assessment report from ORP. The source control company technical authority (CTA) has scheduled a meeting with all of the source custodians to discuss all issues that have been identified as part of this assessment and determine the necessary corrective actions. The goal is to consolidate all improvements into one procedure revision instead of several small ones. It is recommended that the deadline for this PER be extended to January 31, 2009 so corrective actions can be identified and procedure/form changes can be worked through the review and implementation processes. Once corrective actions have been chosen, the CTA may elect to roll up all of the source assessment related PERs if necessary."

I have not requested an extension on an action like this before, if this is not the correct way to-do so, please let me know.

Thank you,

Laci Matarazzo

Radiological Controls, WRPS
373-4696
2750E C-101

Save

Problem Evaluation Request (PER)

WRPS-PER-2008-0010
In Process/Work

PER No	Date of Discovery	Time of Discovery (24:00)	Project
WRPS-PER-2008-0010	10/02/2008	14:11	Base Operations

Location

All Tank Farms

How Was Problem Discovered

General Observation

Description of Concern or Problem

Abnormal Operating Procedure TF-AOP-010 "Response to Flooding Conditions" and TFC-BSM-FPM_PR-C-11 " Winterization Procedure for 200 Area Tank Farm Facilities" have not been updated to reflect that water has been physically disconnected by cutting and capping piping to single shell tanks see below.

This information below was provided by Water Utilities and confirmed for the Single Shell Tanks by Engineering (Hull). (I did not confirm the statement for AN farm). Obviously these procedures need to be updated. It is not obvious to me that these are the only affected procedures, other documents used by first responders (e.g. checklist) may be affected.

241-U/244-U SERVICE PIT - Line Cut & Capped (06) (31-R) EAST ON 16th St., 100' WEST OF U-PLANT OR 3/10 OF A MILE EAST OF THE VALVE PIT ON 16th. SOUTH SIDE OF 16th STREET

241-T - Line Cut & Capped (97) (13-R) 100' EAST OF 23rd AND BRIDGEPORT ON SOUTH SIDE OF THE ROAD

241-TX/TY - Line Cut & Capped (97) (21-R) 150' EAST OF BRIDGEPORT & 22nd NEAR TRACKS. NORTH SIDE OF 22nd

241-S/SX - Line Cut & Capped (97) (46-R) 100' EAST OF REDOX STEAM LINE. DIRECTLY EAST OF 244-S

241-AX SERVICE PIT - Line Cut & Capped (08) (R-81) EAST OF 401-A BUILDING (100') NEAR CANTON AVENUE

241-BX/BY SERVICE PIT - Line Cut & Capped (97) (30R) 30' FROM BX CHANGE TRAILER NEAR BALTIMORE AVENUE

241-C FARM - Line Cut & Capped (07)(4R) ACROSS 7th STREET SOUTH OF 271 CR

241-AN SERVICE PIT- Line Cut & Capped (08) VALVE EAST OF SERVICE BUILDING AT BOTTOM OF HILL NO ID # ON VALVE

Requirement Not Satisfied	Source Document Number

Equipment Identification Number	System Identification

Immediate actions Taken or Planned

notified the Shift Operations Manager

Recommended Corrective actions

Update the affected procedures, evaluate why the ECN process failed to ensure the Abnormal Operating Procedures were updated

Originator Contact

I would like to help define the problem

Originators Name	Originators ID	Originators Phone	Date Initiated
Hampton, Cliff	H4255200	(509) 373-5205	10/02/2008

SHIFT OPERATIONS REVIEW

Title

Water isolated from SSTs

How Discovered	Agency
self-ID prior to event	

Reportability	SSC Operability	Operability Review	Comp Measures Req
Non-Reportable	N/A	N/A	

Describe actions Taken or Recommended

No further actions taken or recommended by Bae ops SO

SO Reviewer Name	SO Reviewer ID	SO Reviewer Phone	SO Review Date
Strasser, David W	H0075556	(509) 373-2689	10/02/2008

SCREENING

PER Significance Level			
PER with Resolution			
Independent Assessment Review	**Occurrence Report Number**	**Externally Identified**	
No		No	
Assigned Responsible Manager	**Facilities Rep / SSO**	**Safety Management Rep**	
Reynolds, Tammy R			
Program		**Safety Management Program**	

PER Screening Comments

PER w/ Resolution with informal Apparent Causal Analysis
cc: Gary Faust
(nb 10/06/08)

Causal Code

A1B3C01	Design/Engineering Problem Design/Documentation LTA Design/documentation not complete		
MGT/Comm/Train	**Human Performance**	**GEMS**	**Equip/Eng/Other**
Failed Barrier	**ORPS Code**	**Functional Area**	**Work Process**
	Not Applicable	Operations	• Procedures: Preparation/Review
ISMS	**Consequence Code**		
Perform work within the controls	• Procedure - Operational - Procedure ambiguous, in error, could not be worked, was not used		
PER Screening Chair	**PER Screening Chair ID**	**PER Screening Chair Phone**	**PER Screening Date**
Brown, Nancy L	H0088797	(509) 373-0992	10/06/2008

PAAA REVIEW

PAAA Screening	PAAA Codes	Function Codes	
PAAA, Non-NTS Reportable	• 10 CFR 830.122 (d)(1)	• Procedure Quality	
NTS Report Number	**NTS Report Date**		
Repetitive / Recurrent	**Programmatic**	**Intentional Violation / Misrepresentation**	
No	No	No	

PAAA Screening Comments

PAAA Reviewer Name	PAAA Review Date	
Anderson, Craig E	10/06/2008	
PAAA Approver Name	**PAAA Approve Date**	
Anderson, Craig E	10/07/2008	

CAUSE ANALYSIS

Task Demands	Work Environment	Individual Capabilities	Natural Tendencies/ Human Nature

Description of Occurrence

Abnormal Operating Procedure TF-AOP-010 "Response to Flooding Conditions" and TFC-BSM-FPM_PR-C-11 " Winterization Procedure for 200 Area Tank Farm Facilities" have not been updated to reflect that water has been physically disconnected by cutting and capping piping to single shell tanks see below.

Extent of Condition

This issue is limited to only the two procedures identifiied in this PER.

Safety Significance

There are not TSRs associated with single shell tanks that would indicate a safety significance.

Generic Implications

Remedial Corrective Action

TF-AOP-010 "Response to Flooding Conditions" has bee revised. Revidions to TFC-BSM-FPM_PR-C-11 " Winterization Procedure for 200 Area Tank Farm Facilities have been developed and submitted to the Procedures Organization for incorporation.

Causal Analysis, Apparent Cause and/or Root Cause Analysis

When Engineering approved these changes to the raw water systems at the Tank Farms, these procedures were not identified as needing to be changed on the ECN

ATTACHMENTS

FW_ PER EXTENSION WRPS-PER-2008-0010.msg

Link to PER

TF-AOP-010_C1_Response_to_Flooding_Conditions.doc

TFC-BSM-FPM_PR-C-11,_Winterization_Procedure_for_200_Area_Tank_Farm_Facilities.doc

AUDIT HISTORY

Change Date	Auditor	Comments
10/07/2008 08:52	Owen, Annette	Responsible Manager Task Launched by Owen, Annette
07/29/2009 17:31	Brown, Robert L	Apparent Cause Tab initial submission.
07/29/2009 17:31	Brown, Robert L	Apparent Cause Tab initial submission.
07/29/2009 17:31	Brown, Robert L	'Safety Significance' was changed. 'HPI Error Precursors were changed.'

-- End of Report --
08/06/2009 09:16 AM

Task# WRPS-PER-2008-0010

E-STARS[R] Report
Task Detail Report
08/06/2009 0917

TASK INFORMATION			
Task#	WRPS-PER-2008-0010		
Subject	RES; Water isolated from SSTs		
Parent Task#		**Status**	Open
Reference		**Due**	07/19/2009
Originator	^PER Coordinator	**Priority**	Medium
Originator Phone		**Category**	PER
Origination Date	10/02/2008 1419	**Generic1**	None
Remote Task#		**Generic2**	None
Deliverable	PER Review	**Generic3**	None
Class	None	**View Permissions**	Global
Instructions	*No Instructions*		

ROUTING LISTS

1	Responsible Manager	Active
	Review the PER Screening Tab and Senior Manager Review for requested data. Complete the task in E-STARS in accordance with TFC-ESHQ-Q_C-C-01, and TFC-ESHQ-Q_ADM-C-12 Apparent Cause Analysis & Corrective Action Planning.	
	• Owen, Peter - Assign - Reassigned - 05/20/2009 1135 *Instructions:*	
	• Reynolds, Tammy R - Assign - Completed - 07/29/2009 1348 *Instructions:*	
	• Reynolds, Tammy R - Assign - Withdrawn - 06/22/2009 0814 *Instructions:*	
	• Owen, Peter - Assign - Reassigned - 05/20/2009 1135 *Instructions:* Did you contact the originator about the PER? Document your contact in the response window.	
	• ^Independent Assessment Review(Brown, Robert L) - Review - Concur with comments - 07/29/2009 1732 *Instructions:*	
2	Review Initial PER	Inactive
	Review New PER	
	• ^SO(Strasser, David W) - Review - Concur - 10/02/2008 1447 *Instructions:*	
	• ^PER Screening(Brown, Nancy L) - Review - Concur - 10/06/2008 1610 *Instructions:*	
	• ^Mgr Review(Owen, Annette) - Review - Concur - 10/07/2008 0852 *Instructions:*	

ATTACHMENTS

Attachments	1. FW_ PER EXTENSION WRPS-PER-2008-0010.msg 2. Link to PER 3. TF-AOP-010_C1_Response_to_Flooding_Conditions.doc 4. TFC-BSM-FPM_PR-C-11,_Winterization_Procedure_for_200_Area_Tank_Farm_Facilities.doc

Task# WRPS-PER-2008-0010

COMMENTS	
Poster	^PER Coordinator (Owen, Annette) - 11/12/2008 1211
	1st extension to 1/19/09 per form A-6003-227.
	The PER originator has stated that he wants to be involved with the analysis and corrective action planning. The PER owner had a death in the family and is out of the state and unable to complete his PER. Need more time to meet with the PER owner and develop a causal analysis about this issue. Pete Owen
Poster	^PER Coordinator (Glaman, Linda R) - 06/22/2009 0816
	2nd extension to 7-15-09 per attached email request. LBG
	We plan on performing the cause analysis but will be worked on a priority basis. This PER was transferred with numerous other PER's when Pete Owen left the company and we are working off the PER's on a priority basis. We should have this PER complete within the next 2 weeks. B Parnell for T Reynolds 6-18-09 approved C Maciuca 6-18-09
Poster	Reynolds, Tammy R (Parnell, Bill) - 07/29/2009 1341
	Abnormal Operating Procedure TF-AOP-010 "Response to Flooding Conditions" and TFC-BSM-FPM_PR-C-11 " Winterization Procedure for 200 Area Tank Farm Facilities" have been updated to reflect that water has been physically disconnected by cutting and capping piping to single shell tanks.
Poster	^Independent Assessment Review (Brown, Robert L) - 07/29/2009 1732
	Concur
	Modified safety significance per telecon with Tammy Reynalds. Concur Bob Brown

TASK DUE DATE HISTORY			
Modified	06/22/2009 0814 - ^PER Coordinator (Glaman, Linda R)	**New Due Date**	07/19/2009 1630
Modified	11/12/2008 1210 - ^PER Coordinator (Owen, Annette)	**New Due Date**	01/23/2009 1630
Modified	10/07/2008 0852 - ^PER Coordinator	**New Due Date**	11/16/2008 1630
Modified	10/07/2008 0852 - ^PER Coordinator	**New Due Date**	11/16/2008 1630
Modified	10/02/2008 1419 - ^PER Coordinator	**New Due Date**	10/04/2008 1630

SUB TASK HISTORY

No Subtasks

-- end of report --

Double click to change COPY type

Response to Flooding Conditions

PCA Incorporated:	TF-2009-0471
Procedure Signatures for:	TF-AOP-010, C-1
Type of Change:	PCA
Review Designator:	E, R, S, EP
USQ Screening Number:	TF-09-0423-S, Rev. 1

POSITION/ORG	DELEGATE	DATE
SSM/BO	Dale B. Higham	06/26/2009
EP Team Lead	Teodoro Morales	06/24/2009
IH/Base Ops	W. L. Adams	06/24/2009
Env/BO-DST	S. R. Tifft	06/25/2009
HP/BO Radcon	Jeff Marks	06/25/2009
SSM/BO	J. E. Andrews	06/26/2009
SSM/BO	David W. Strasser	06/30/2009
Technical Writer	L. Coleman	07/02/2009
Approval Authority	Tammy R. Reynolds	06/30/2009

Justification:

Operations request to address WRPS-PER-2008-0010.

Summary of Changes:

Deleted reference to AN, AX, BX/BY service pit info from Table 1. Deleted reference to U, T, TX/TY service pit info from Table 2.

Next Periodic Review Date – 03/17/2011

The following organizations have determined they need to review this procedure at next periodic review cycle: Technical Authority, Environmental and Radiological Control.

1.0 AFFECTED PERSONNEL, FACILITIES, EQUIPMENT, OR AREAS

This procedure applies to WRPS personnel and subcontractors doing work in 200 East Area, 200 West Area, and 600 Area controlled by WRPS and equipment in these areas. This procedure does not apply to WRPS personnel and subcontractors doing work at the 222-S Laboratory Complex.

2.0 ENTRY CONDITIONS

Flooding reported from the field or suspected from data received from Operator rounds or other sources can be caused by ruptured water lines, snow melt, or heavy rains. Flooding may be determined from the following;

- Unexplained increases in tank level indications
- Liquid or spray is observed coming from service pits, flush pits, RW piping, etc.
- Standing pools of liquid are observed around pits, buildings, and/or equipment.

3.0 ACTIONS

NOTE - Steps within each action section (Immediate and Follow-On Actions) of this section may be performed in any logical order, or omitted per Shift Managers discretion.

3.1 Immediate Actions

3.1.1 **IF** liquid pools or spray are observed and it cannot be determined if they are potentially contaminated, exit this procedure, **AND**

RESPOND per procedure TF-AOP-011.

3.1.2 **IF** water is in or near electrical components, **PRIOR** to attempting to isolate water source, **DE-ENERGIZE** effected area electrical circuits.

3.1 Immediate Actions (Cont.)

NOTE - Table 1 for East area and Table 2 for West area are provided to identify emergency shutoff valves and their locations. These tables can be used to secure all raw water to affected Farm(s) in the event access to closer isolation valves is hampered by flood condition.

- Power Operators have a reach rod for isolating below ground water supply valves.

3.1.3 **IF** flooding is reported from a ruptured water line inside a Farm, **ISOLATE** water source by shutting appropriate supply valves as close to affected location as feasible.

3.1.4 **IF** a ruptured water line is reported that is upstream of indicated emergency isolation valves, **CONTACT** 200 Area Water Treatment Plant at 373-2748 to assist in isolating water break, performing required repairs, and restoring service.

3.1.5 **IF** significant snow melt or heavy rains are occurring or are expected, **CONSIDER** the following actions as appropriate;

- Increase level monitoring on primary tanks, catch tanks, double contained receiver tanks, etc.
- Ensure 204-AR roll-up door is closed and increase monitoring for runoff entering 204-AR facility
- Check unmanned facilities to ensure windows and doors are closed, and any floor drains are unclogged
- Check equipment electrical enclosures to ensure they are closed and secure against the weather
- Consider constructing/installing berms or using sandbags as necessary to keep water from entering buildings or equipment.

3.1.6 **IF** unexpected level increases occur in 241-AN-101, 241-AW-102, or 241-AP-103, **CONSIDER** possible sources identified below;

- 241-AN-101 - Possible sources: Leak in AN Water Service Building
- 241-AW-102 - Possible sources: Leak in 242-A Evaporator, 272-AW Decon Shower, or AW Water Service Building
- 241-AP-103 - Possible sources: Leak in AP Water Service Building.

NOTE - Leak detectors in an ALARM state are considered non-operational for LCO purposes.

3.1.7 **EVALUTE** if a potential LCO has been entered due to flooding conditions.

3.2 Follow on Actions

WARNING

Do not enter flooded rooms or areas that contain energized electrical equipment.

3.2.1 **INVESTIGATE** affected areas for damage.

3.2.2 **EVALUATE** conditions against reporting requirements of TFC-OPS-OPER-C-24, "Occurrence Reporting and Processing of Operations Information."

3.2.3 **IF** damage has occurred, **CONTACT** responsible area or facility manager to initiate appropriate work request for repairs.

3.2.4 **CONSIDER** pumping flooded catch tanks, pits, buildings, or areas to return to normal conditions.

4.0 TERMINATION/EXIT CRITERIA

4.1.1 Flooding has been secured or stopped, and affected facilities and/or equipment have been returned to normal service and/or work requests have been submitted for required repairs.

4.1.2 TF-AOP-011 has been implemented.

5.0 RESTORATION

NOTE - Actual steps taken for restoration are dependant upon the specific situation and facility configuration at time of event. The following steps are general guidance and may be performed in any logical order, or omitted at discretion of Shift Manager to fit situation.

5.1.1 **RESTORE** systems and equipment per operational requirements.

5.1.2 **IF** water supply has been shut off to a back flow preventer, **ENSURE** back flow preventer system has been functionally tested prior to restoring service.

5.1.3 **COORDINATE** repairs to waterlines outside Tank Farm boundaries with 200 Area Water Purveyor.

5.1.4 **EVALUATE** need to perform post flooding condition facility inspections.

5.1.5 **IF** deemed necessary by Shift Manager, **CONDUCT** critique to assess response to event. Representatives from the following groups should be invited as a minimum.

- Engineering
- Security & Emergency Services/Events & Investigations
- Industrial Safety
- Operations personnel on duty at time of event (if possible)
- Environmental Protection (ECO, or delegate).

6.0 RECORDS

NOTE - No records are generated during the performance of this procedure.

Table 1 - East Tank Farms Water Service Pit Emergency Shut-Offs

FACILITY/PIT NAME	WATER SOURCE VALVE LOCATION
~~**241-AN Service Pit**~~	~~**(AN241-RW-V-113)** Valve east of Service Building at bottom of hill (No I.D. # on valve) See H-2-830461 Sht 10~~
241-AP Service Pit	**(AP241-RW-V-101)** 25 feet west of AP fence line near Canton Avenue. See H-2-830461 Sht 10
241-AW Service Pit	**(AW241-RW-V-101 or AW241-RW-V-102)** Located in Water Service Building 241-AW-801
272-AW	**(Valve I. D. #:142-R)** Located on West side of 272-AW along sidewalk. See H-2-830461 Sht 10
702-AZ **&** **241-AX Farm**	NOTE – All three valves need to be closed to ensure isolation. **(Valve I. D. #:140-R)** Located approx. 50 feet south of 241-AZ-271 Control Room **(Valve I. D. #:146-R)** Located approx. 100 feet west of 241-AN-271 Control Room (down the hill) **(AZ241-RW-V-145)** Back Flow Preventer outlet valve located along Canton Ave. Outside east fence and down hill from AZ Farm (inside AZ241-RW-ENCL-150) See H-2-830461 Sht 10
~~**241-AX Service Pit**~~	~~**(Valve I. D. #: R-81)** East of 401-A building (100 feet) near Canton Avenue. See H-2-36535 Sht 10~~
~~**241-BX/BY Service Pit**~~	~~**(Valve I. D. #: 30R)** 30 feet from BX change trailer near Baltimore Avenue. See H-2-830461 Sht 5 and H-2-36535 Sht 9~~
241-C Farm	**(Valve I. D. #: 4R)** Across 7th street south of 271-CR. See H-2-36535 Sht 10 **(Valve HV-136120)** In building 241-C-73. Isolates C-200 retrieval system water supply.
204-AR	**(Valve I. D. #: 160R)** Located about 30 feet North of 204-AR. See H-2-36535 Sht 10

Table 2 - West Tank Farms Water Service Pit Emergency Shut-Offs

PIT NAME	WATER SOURCE VALVE LOCATION
241-SY Service Pit	**(Valve I. D. #: 32-R)** North of REDOX, 100 feet east of 242-S Steam Station cutoff. See H-2-36536
241-SY-A Flush Pit OR 241-SY-B Flush Pit	**(SYSP-RW-V-101)** Located 10 feet north of SY Service Pit
~~**241-U/241-U Service Pit**~~	~~**(Valve I. D. #: 31-R)** CONTACT 200 Area Water Treatment Plant at 373-2748 to assist in isolating See H-2-36536~~
~~**241-T**~~	~~**(Valve I. D. #: 13-R)** 100 feet east of 23rd and Bridgeport on south side of road. See H-2-36536~~
~~**241-TX/TY**~~	~~**(Valve I. D. #: 21-R)** 150 feet east of Bridgeport & 22nd near tracks. North side of 22nd. See H-2-36536~~
241-S/SX	Raw Water isolated to 241-S/SX per ECN-662437 **(Valve S241-RW-V-120)** near 302-C hot water make up system to isolate S Farm retrieval supply. **(Valve SYSP-RW-V-115)** to isolate saltwell dilution tank fill lines.
242-S	**(Valve I. D. #: 32-R)** CONTACT 200 Area Water Treatment Plant at 373-2748 to assist in isolating

Ownership matrix

1.0 PURPOSE AND SCOPE

This procedure implements the DOE O 433.1 seasonal facility preservation expectations for preventing equipment and building damage due to weather conditions. This procedure specifically defines the responsibilities and requirements for implementation, surveillance, and securing from cold weather protection and facility preservation during the winter months for buildings and tank farm facilities under the management of the Tank Operations Contractor (TOC) for Base Operations and 222-S Laboratory. For responses to inclement conditions listed below, refer to the referenced Abnormal Operating Procedure:

TF-AOP-007	Response to Hanford Site Range Fire
TF-AOP-008	Response to High Winds and Dust Storms
TF-AOP-010	Response to Flooding Conditions
TF-AOP-013	Response to Volcanic Ash Fall and Snow Fall
TF-AOP-014	Response to Lightning
TF-AOP-017	Response to Winter Hazards.

Snow removal activities are addressed in TFC-PLN-45.

Procurement of winter clothing and foul weather gear are addressed in TFC-BSM-C-P_CPR-C-06 or TFC-BSM-CP_CPR-C-01.

2.0 IMPLEMENTATION

This procedure is effective on the date shown in the header.

3.0 RESPONSIBILITIES

3.1 Manager, Facilities & Property Management

- Facilitates annual kick-off of winterization activities during the summer months.
- Has overall coordination responsibility for implementation of process for administrative buildings, Base Operations, and 222-S Laboratory facilities.
- Provides primary point of contact with other contractors as needed for implementation within administrative facilities (Fire Department, Teamsters, Refrigerator Equipment Services, etc.).
- Assigns a person-in-charge of cold weather protection for each major facility or group of facilities (excluding those specifically assigned to Base Operations Maintenance or 222-S Laboratory).

3.2 Base Operations Maintenance Manager and 222-S Facility Manager

- Assigns a person-in-charge of cold weather protection for each major facility or group of facilities.
- Assigns appropriate priority to corrective maintenance items and repairs that affect winterized equipment.
- Provides primary point of contact with other contractors as needed for implementation within their facilities (fire department, teamsters, Refrigerator Equipment Services, etc.).

4.0 PROCEDURE

See Figure 1 for process flow.

4.1 Seasonal Protection Activities

Manager, Facilities & Property Management

1. Hold an annual kick off meeting in July/August with building administrators, East and West Maintenance, 222-S Laboratory and appropriate subcontractors (Fire Department, Teamsters, Refrigerator Equipment Services, etc). Topics to include:

   - Performance of the preparation checklists
   - Vulnerability assessments for East and West Maintenance and 222-S Laboratory Facilities only)
   - Fire system draining
   - HVAC maintenance activities
   - Equipment preparation
   - Lessons learned from previous year(s)
   - Review of guidance in Attachment A
   - Review of previous year's preparation checklists and vulnerability assessments.

2. Provide a cold weather and safety protection briefing for inclusion at tail gates for first week of October or input for an informational lessons learned bulletin. Topics to include:

   - Expectations for use of salt, sand, and shoveling
   - Use of portable heaters
   - Things to look for during cold weather periods
   - Ensure vehicles are equipped with ice scrapers
   - Reporting expectations for any suspected problem with heating or other cold weather protection equipment.

Designated Person-in-Charge (All facilities)	3. Commence preparation checklist in August: • Administrative buildings (A-6004-142) • Buildings under the jurisdiction of Base Operations East and West Maintenance (A-6004-141). • 222-S Laboratory (A-6004-202) 4. Submit the completed preparation checklist by end of October to the appropriate Base Operations or 222-S Laboratory Level 2 Manager for review.
Designated Person-in-Charge (Base Operations East and West Maintenance and 222-S Laboratory, only)	5. Periodically (monthly) review completed Operations surveillances and completed preventative maintenance packages for October through March. 6. Ensure de-winterization activities are completed at the end of March.
Designated Person-in-Charge (Administrative buildings only)	7. Perform de-winterization preparation checklist (A-6004-139).

5.0 DEFINITIONS

No terms or phrases unique to this procedure are used.

6.0 RECORDS

Record Description	Vital Record Y/N	QA Record Y/N	QA Record Retention L/NP	NARA Retention Schedule	Other Retention Requirements	Records Custodian
Winterization Preparation Checklist General Purpose Facilities (A-6004-142)	N	N	N/A	ADM-17.28a	N/A	Facilities & Property Management Maintenance Supervisor
De-winterization Preparation Checklist for General Purpose Facilities (A-6004-139)	N	N	N/A	ADM-17.28a	N/A	Facilities & Property Management Maintenance Supervisor
Winterization Preparation Checklist for Tank Farm Facilities (A-6004-141)	N	N	N/A	ADM-17.28a	N/A	Base Ops Services Maintenance
Base Operations Vulnerability Assessment (A-6004-140)	N	N	N/A	ADM-17.28a	N/A	Base Ops Services Maintenance
SST Retrieval & Closure Operations Vulnerability Assessment (A-6004-138)	N	N	N/A	ADM-17.28a	N/A	Base Ops Services Maintenance
Winterization Preparation Checklist 222-S Laboratory Facilities (A-6004-202)	N	N	N/A	ADM-17.28a	N/A	222-S Operations
222-S Laboratory Vulnerability Assessment (A-6004-203)	N	N	N/A	ADM-17.28a	N/A	222-S Operations

The identified record custodian is responsible for record management in accordance with TFC-BSM-IRM_DC-C-02. Other records generated from the referenced surveillance and maintenance procedures and the problem evaluation reporting process are controlled in accordance with the process that generated the record.

7.0 SOURCES

7.1 Requirements

1. DOE O 433.1, "Maintenance Management Program For DOE Nuclear Facilities," Attachment 1, 3.r.

7.2 References

1. DOE G 433.1-1, "Nuclear Facility Maintenance Management Program Guide for Use with DOE O 433.1," Section 4.18.
2. 3-MISC-126, "East Tank Farms Weekly Check of Heater and Heat Trace."
3. 3-MISC-363, "Winterization/De-Winterization Tank Farms."
4. TO-040-730, "Perform Routine Surveillance of Winterized Buildings and Equipment."

5. TO-040-740, "Perform Routine Surveillance of Winterized Buildings and Equipment for East Tank Farms."

6. TF-AOP-007, "Response to Hanford Site Range Fire."

7. TF-AOP-008, "Response to High Winds and Dust Storms."

8. TF-AOP-010, "Response to Flooding Conditions."

9. TF-AOP-013, "Response to Volcanic Ash Fall and Snow Fall."

10. TF-AOP-014, "Response to Lightning."

11. TF-AOP-017, "Response to Winter Hazards."

12. TFC-BSM-IRM_DC-C-02, "Records Management."

13. TFC-BSM-CP_CPR-C-01, "Purchasing Card (P-Card)."

14. TFC-BSM-CP_CPR-C-06, "Procurement of Items (Materials)."

15. TFC-ENG-FACSUP-C-02, "Operability/Technical Evaluation."

16. TFC-ESHQ-Q_C-C-01, "Problem Evaluation Request."

17. TFC-PLN-45, "Snow Removal Plan."

18. ATS-LO-040-101, "ATS 222-S Complex Building Inspection."

19. ATS-LO-002-112, "ATS Utility Disconnect and Response."

20. 2S-00486, "Winterize 222-S Complex (Electrician)."

21. 2S-00487, "Monthly Winterization Maintenance (Electrician)."

22. 2S-00488, "De-Winterize The LABS (Electrician)."

23. 2S-00531, "Winterize 222S Complex (Pipefitter)."

24. 2S-00532, "Monthly Winterization Maintenance (Pipefitter)."

25. 2S-00537, "De-Winterize The LABS (Pipefitter)."

26. 2S-105483, "Perform Winterization of Building 616 Water System."

27. RPP-30148, "IDF Operations Instructions."

    - Appendix F, IDF-040-712, Winterization Operation Instruction.
    - Appendix G, IDF-1001, Inspection Operation Instructions.

Figure 1. Winterization Process Flow.

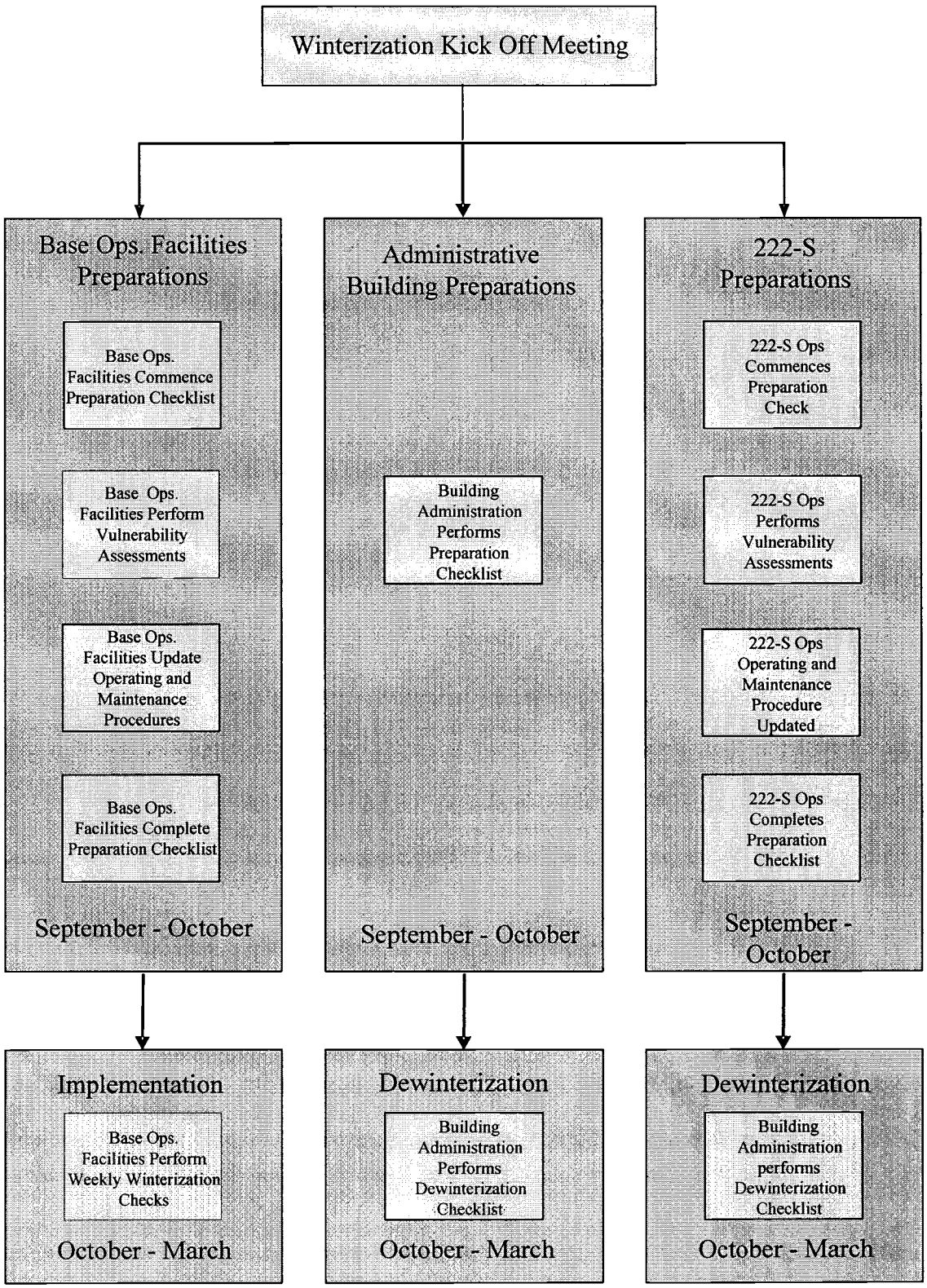

Table 1. Base Operations Water Service Pit Emergency Shutoffs.

PIT NAME	HEATER POWER SOURCE LOCATION	WATER SOURCE VALVE LOCATION
241-AP SERVICE PIT	271-AP "CONTROL ROOM," PANEL "A," CIRCUITS 6 & 8	25' WEST OF AP FENCE LINE NEAR CANTON AVENUE
241-AW SERVICE PIT	271-AW "CONTROL ROOM," PANEL "A," CIRCUITS 22 & 24	VALVE IN AW SERVICE PIT
241-SY SERVICE PIT	241-SY-271, PANEL B, BREAKER 33	(32-R) NORTH OF REDOX, 100' EAST OF 242-S STEAM STATION CUTOFF
241-SY-A FLUSH PIT	VENT EQUIP PAD, PANEL A, BREAKER 7	VALVE IN SY SERV PIT
241-SY-B FLUSH PIT	VENT EQUIP PAD, PANEL A, BREAKER 7	VALVE IN SY SERV PIT

ATTACHMENT A - SUPPLEMENTAL INFORMATION
WINTERIZATION PROGRAM EXPECTATIONS

The Tank Operations Contractor is responsible for protecting facilities from inclement weather during the winter periods to prevent the inadvertent damage that can be caused by freezing conditions. This is performed via a cyclical approach towards assessing vulnerabilities, performing preventive maintenance on protective systems, performing routine surveillances during months susceptible to freezing conditions, and then securing active winter freezing protection systems when warmer weather arrives. See Table 1 for listing of water service pit emergency shutoffs.

Vulnerability Assessments – Performed by the assigned Person-in-Charge (PIC) for Base Operations East and West Maintenance and 222-S Laboratory Operations during September, well before inclement weather is expected. Specific areas to assess are included on the implementation checklist and the completion of these assessments should be documented on a winterization vulnerability assessment form (A-6004-138, A-6004-203, or A-6004-140) and should include the following:

- Degraded equipment on buildings associated with the Tank Farm complexes (rain gutters, siding, trailer skirts, etc.)
- New equipment installed since last winter that may not be entered into the preventative maintenance system or surveillance processes
- Subcontractor work activities that may have partially completed systems or temporary systems that warrant protection
- Excavation sites where normally installed earth insulation has been reduced or removed rendering the systems unprotected from freezing conditions
- Buildings or structures that are no longer present or are new and need to be added to the list.

Items identified during the vulnerability assessment are to be brought to the attention of the facility manager for evaluation and establishment of compensatory actions if warranted.

Facility temperature control – Any facility with systems susceptible to freeze damage should have ambient temperatures maintained at or above 55°F or warmer. If temperatures cannot be maintained, installation of temporary heating systems should be performed to keep temperatures above 40°F. If temperatures fall below 35°F, an engineering evaluation will be required on all systems subjected to potential freeze damage in accordance with TFC-ENG-FACSUP-C-02 to ascertain their operability. Maintenance activities that intentionally disable heating systems during the cold weather protection season (October through March) should be planned with the support of temporary heating if the potential exists for temperatures to fall below 40°F.

Building/facility HVAC preparation - Heating systems should be cleaned, serviced, and functionally tested. Facility personnel should inspect, test, and stage portable auxiliary heaters.

Message

From: ^WRPS Corrective Action Group
Sent: Thursday, June 18, 2009 3:32 PM
To: ^WRPS Corrective Action Group
Subject: FW: PER EXTENSION WRPS-PER-2008-0010

I understand. I agree with the extension through July 15, 2009.

Tino Maciuca, Manager
Performance Assurance & CAM
509-373-6334
509-438-9519 (cell)
From: Parnell, William L (Bill)
Sent: Thursday, June 18, 2009 1:12 PM
To: Maciuca, Constantin; ^WRPS Corrective Action Group
Cc: Reynolds, Tammy R
Subject: RE: PER EXTENSION

Just because the previous owners of this PER have done nothing is not a good reason to hold us hostage and not grant the extension. We plan on performing the cause analysis but will be worked on a priority basis. This PER was transferred with numerous other PER's when Pete Owen left the company and we are working off the PER's on a priority basis. We should have this PER complete within the next 2 weeks.

From: Maciuca, Constantin
Sent: Thursday, June 18, 2009 12:20 PM
To: ^WRPS Corrective Action Group
Cc: Parnell, William L (Bill); Reynolds, Tammy R
Subject: RE: PER EXTENSION

The CAM group received your request for an extension to the subject PER. I understand the need for an extension to complete a corrective action; however, the PER was due 1/19/2009 making it 150 days delinquent. This extension will give the current responsible manager a total of 73 days from date of transfer for resolution and will make the PER 296 days old at resolution completion. The PER has no Apparent Cause entry..

Please complete the Causal Analysis tab information in E-STARs to complete the "Resolution" of the subject PER. If an extension is needed to complete Corrective Actions after the resolution is complete, certainly it will be issued.

Thanks in advance for your attention to this matter.

Tino Maciuca, Manager
Performance Assurance & CAM
509-373-6334
509-438-9519 (cell)

From: ^WRPS Corrective Action Group
Sent: Thursday, June 18, 2009 10:55 AM
To: Parnell, William L (Bill); ^WRPS Corrective Action Group; Maciuca, Constantin
Cc: Reynolds, Tammy R
Subject: RE: PER EXTENSION
Importance: High

This PER w/RES was due 1-19-2009 making it 150 days delinquent. It was transferred to the current responsible manager on 5-20-2009; when it was 121 days delinquent. The current

responsible manager has had it 29 days. This extension will give the current responsible manager a total of 73 days from date of transfer for resolution and will make the PER 296 days old at resolution completion. The PER has no Apparent Cause entry, and has had one extension to date. Revising the procedure could be documented as a corrective action.

Thanks...As always, please call if you have questions

Linda RB Glaman
Operations Support Specialist/CAM
Turning 'round-n-'round downtown
539-2771

"The only stupid question is the one that remains unasked"

From: Parnell, William L (Bill)
Sent: Thursday, June 18, 2009 8:56 AM
To: ^WRPS Corrective Action Group
Cc: Reynolds, Tammy R
Subject: PER EXTENSION

Please extend PER 2008-0010 until 7/30/2009. The PCA's to the procedures have been initiated and this will allow time for the review, approval, and issuance of the procedures.

Save

Problem Evaluation Request (PER)

WRPS-PER-2008-0011
Closed 10/07/2008 09:00

PER No	Date of Discovery	Time of Discovery (24:00)	Project
WRPS-PER-2008-0011	09/25/2008	10:00	Base Operations

Location

2704HV

How Was Problem Discovered

Maintenance Activity

Description of Concern or Problem

On 9/25/08, Base Operations RadCon received a calibration as-found out of tolerance (OOT) report from Base Operations Maintenance: A Radeco air sampler (# 9004 aka RAD-1039), was outside the acceptable calibration tolerance of +10% of the Conventionally True Value (CVT).

The rotameter was found OOT per Base Operations Maintenance procedure.

Listed below is a summary of the "as-found conditions:
OBSERVED CTV DELTA TOLERANCE

5 4.279 -0.721 -16.85%
4 4.152 0.152 3.66%
3 3.27 0.27 8.26%
2 2.232 0.232 10.39%
1 1.088 0.088 8.09%

This sampler was also outside the tolerance requirement of TANK FARMS RADIOLOGICAL CONTROL MANUAL (TFRCM) HNF-5183, Rev. 1 Chapter 5, Article 555.5, at the 5 cfm flow rate.

The TFRCM references flow tolerance guidance provided in ANSI N42.17B.

This ANSI N42.17B standard specifies that air flow meters, differential pressure indicators, and other devices used to determine volumetric flow rates of air samplers and monitors should be calibrated to within ±15% of the true reading.

Users of this air sampler would have over estimated the true volume of air when operating at 5 cfm. Calculations would have been under estimated by as much as 16.85%.

Requirement Not Satisfied	Source Document Number

Equipment Identification Number	System Identification
9004	Radiation Monitoring

Immediate actions Taken or Planned

An evaluation of the OOT condition, in accordance with TFC-ESHQ-RP_INS-P-05, REV B-2, was performed to determine the significance of the OOT condition.

2704HV count room data was collected and the results of six instances when this sampler was used during the calibration time period (5/8/08 to 8/8/08) were evaluated.

Five of the six samples, when allowing for radon decay, were < 1% alpha DAC and 0% beta DAC, however, the remaining sample would have actually been 111% alpha DAC activity (reported as 95%) and 5.8% beta DAC activity (reported as 5%).

This sample was collected from within a posted ARA, workers were within the protection factors for the respiratory protection used, and no further actions would have resulted from the use of the OOT sampler.

Recommended Corrective actions

The calibration history for this sampler should be reviewed, as the failure to maintain calibration tolerance was not likely caused by the expected "wear & tear" of field use.

Originator Contact

I would like to review the the corrective actions at closure to ensure they were effective

Originators Name	Originators ID	Originators Phone	Date Initiated

Wendling, Marc	H0074276	(509) 373-2121	10/02/2008
SHIFT OPERATIONS REVIEW			
Title			
A Radeco air sampler (# 9004 aka RAD-1039), was outside the acceptable calibration tolerance of +10% o			
How Discovered		**Agency**	
self-ID prior to event			
Reportability	**SSC Operability**	**Operability Review**	**Comp Measures Req**
Non-Reportable	N/A	N/A	
Describe actions Taken or Recommended			
Air Sampler has been taken out of service and is being evaluated for disposal. BO SO.			
SO Reviewer Name	**SO Reviewer ID**	**SO Reviewer Phone**	**SO Review Date**
Andrews, Jeffrey E	H0078933	(509) 373-2689	10/02/2008
SCREENING			
PER Significance Level			
Trend Only			
Independent Assessment Review	**Occurrence Report Number**	**Externally Identified**	
No		No	
Assigned Responsible Manager	**Facilities Rep / SSO**	**Safety Management Rep**	
Brannan, Patrick (Brad)			
Program		**Safety Management Program**	
• N/A		• N/A	
PER Screening Comments			
cc: Randy Cook, Ron Tucker (nb 10/06/08)			
Causal Code			
MGT/Comm/Train	**Human Performance**	**GEMS**	**Equip/Eng/Other**
Failed Barrier	**ORPS Code**	**Functional Area**	**Work Process**
	Not Applicable	Radiation Protection	• Radiological Instrumentation
ISMS	**Consequence Code**		
Perform work within the controls	• Rad Inst - Calibration - Out of tolerances, pass due calibrations, traceability issues, training, problems with procedural processes		
PER Screening Chair	**PER Screening Chair ID**	**PER Screening Chair Phone**	**PER Screening Date**
Brown, Nancy L	H0088797	(509) 373-0992	10/06/2008
PAAA REVIEW			
PAAA Screening	**PAAA Codes**	**Function Codes**	
PAAA, Non-NTS Reportable	• 10 CFR 830.122 (e)(3)	• M&TE (control and calibration)	
NTS Report Number	**NTS Report Date**		
Repetitive / Recurrent	**Programmatic**	**Intentional Violation / Misrepresentation**	
No	No	No	

PAAA Screening Comments			
PAAA Reviewer Name	**PAAA Review Date**		
Anderson, Craig E	10/06/2008		
PAAA Approver Name	**PAAA Approve Date**		
Anderson, Craig E	10/07/2008		
SENIOR MANAGEMENT REVIEW/CONCURRENCE			
TF Operations Morning Leadership Call			
None. Tino Maciuca 10/7/08			
Instructions for Responsible Manager			
Senior Management	**Sr Mgmt ID**	**Sr Mgmt Phone**	**Sr Mgmt Review Date**
Owen, Annette	H0054042	(509) 372-0533	10/07/2008
ATTACHMENTS			
Link to PER			

-- End of Report --
10/13/2008 06:15 PM

Task# WRPS-PER-2008-0011			
E-STARS[R] Report Task Detail Report 10/13/2008 0615			
TASK INFORMATION			
Task#	WRPS-PER-2008-0011		
Subject	Trend; A Radeco air sampler (# 9004 aka RAD-1039), was outside the acceptable calibration tolerance of +10% o		
Parent Task#		Status	CLOSED 10/07/2008
Reference		Due	10/04/2008
Originator	^PER Coordinator	Priority	Medium
Originator Phone		Category	PER
Origination Date	10/02/2008 1427	Generic1	None
Remote Task#		Generic2	None
Deliverable	PER Review	Generic3	None
Class	None	View Permissions	Global
Instructions	*No Instructions*		
ROUTING LISTS			
1	Review Initial PER		Inactive
	Review New PER		
	• ^SO(Andrews, Jeffrey E) - Review - Concur - 10/02/2008 1502 *Instructions:*		
	• ^PER Screening(Brown, Nancy L) - Review - Concur - 10/06/2008 1611 *Instructions:*		
	• ^Mgr Review(Owen, Annette) - Review - Concur - 10/07/2008 0852 *Instructions:*		
ATTACHMENTS			
Attachments	1. Link to PER		
COLLABORATION			
COMMENTS			
No Comments			
TASK DUE DATE HISTORY			

Task# WRPS-PER-2008-0011			
Modified	10/02/2008 1427 - ^PER Coordinator	New Due Date	10/04/2008 1630
SUB TASK HISTORY			
No Subtasks			
-- end of report --			

Save

Problem Evaluation Request (PER)

WRPS-PER-2008-0017
In Process/Work

PER No	Date of Discovery	Time of Discovery (24:00)	Project
WRPS-PER-2008-0017	10/06/2008	14:00	Radcon-BO

Location

C Farm

How Was Problem Discovered

Radiological Surveys

Description of Concern or Problem

During the weekly contamination survey of C farm 75,000 dpm 100cm2 beta gamma <20 dpm 100cm2 was found on the C104 condenser pit cover.

Requirement Not Satisfied	Source Document Number

Equipment Identification Number	System Identification
C104 condeser pit	

Immediate actions Taken or Planned

Notified shift manager and RCS. Also initiated A PER

Recommended Corrective actions

Paint or clean bare pit cover surface

Originator Contact

No

Originators Name	Originators ID	Originators Phone	Date Initiated
Schroeder, Carl P (inactive)	H0085895	(509) 373-2837	10/06/2008

SHIFT OPERATIONS REVIEW

Title

75,000 dpm 100cm2 beta gamma <20 dpm 100cm2 was found on the C104 condenser pit cover.

How Discovered	Agency
self-ID prior to event	

Reportability	SSC Operability	Operability Review	Comp Measures Req
Non-Reportable	N/A	N/A	

Describe actions Taken or Recommended

Forward PER to Fac. Mgr. for resolution. No additional BOSO actions required at this time.

SO Reviewer Name	SO Reviewer ID	SO Reviewer Phone	SO Review Date
Johnson, Brian A	H0003531	(509) 373-2696	10/06/2008

SCREENING

PER Significance Level	
TUF	

Independent Assessment Review	Occurrence Report Number	Externally Identified	
No		No	

Assigned Responsible Manager	Facilities Rep / SSO	Safety Management Rep	
Ficklin, Jim			

Program	Safety Management Program

PER Screening Comments			
This was an expected condition within the farm. CC: B Brannan, Gordon McKenzie. (Linda Glaman 10/7/08)			
Causal Code			
MGT/Comm/Train	**Human Performance**	**GEMS**	**Equip/Eng/Other**
Failed Barrier	**ORPS Code**	**Functional Area**	**Work Process**
	Not Applicable	Radiation Protection	• Radiological Contamination Control
ISMS	**Consequence Code**		
Identify and analyze hazards			
PER Screening Chair	**PER Screening Chair ID**	**PER Screening Chair Phone**	**PER Screening Date**
Owen, Annette	H0054042	(509) 372-0533	10/07/2008
PAAA REVIEW			
PAAA Screening	**PAAA Codes**	**Function Codes**	
Not subject to PAAA			
NTS Report Number	**NTS Report Date**		
Repetitive / Recurrent	**Programmatic**	**Intentional Violation / Misrepresentation**	
No	No	No	
PAAA Screening Comments			
PAAA Reviewer Name	**PAAA Review Date**		
Anderson, Craig E	10/07/2008		
PAAA Approver Name	**PAAA Approve Date**		
Anderson, Craig E	10/08/2008		
SENIOR MANAGEMENT REVIEW/CONCURRENCE			
TF Operations Morning Leadership Call			
None.			
Instructions for Responsible Manager			
Review the PER and determine action required. Complete action and enter statement on TUF tab. 'Complete' the task in E-STARS and 'Close' in accordance with TFC-ESHQ-Q_C-C-01, Problem Evaluation Request.			
Senior Management	**Sr Mgmt ID**	**Sr Mgmt Phone**	**Sr Mgmt Review Date**
Owen, Annette	H0054042	(509) 372-0533	10/08/2008
Track Until Fixed (TUF)			
Action Taken			
ATTACHMENTS			
FW_ Emailing_ PER_htm.msg			
Link to PER			
WRPS-PER-2008-0017.msg			
AUDIT HISTORY			
Change Date	**Auditor**	**Comments**	
10/08/2008 08:06	Owen, Annette	Responsible Manager Task Launched by Owen, Annette	

-- End of Report --
07/08/2009 07:46 AM

Task# WRPS-PER-2008-0017

E-STARS[R] Report
Task Detail Report
07/08/2009 0749

TASK INFORMATION			
Task#	WRPS-PER-2008-0017		
Subject	TUF; 75,000 dpm 100cm2 beta gamma <20 dpm 100cm2 was found on the C104 condenser pit cover.		
Parent Task#		**Status**	Open
Reference		**Due**	11/30/2009
Originator	^PER Coordinator	**Priority**	Medium
Originator Phone		**Category**	PER
Origination Date	10/06/2008 1416	**Generic1**	None
Remote Task#		**Generic2**	None
Deliverable	PER Review	**Generic3**	None
Class	None	**View Permissions**	Global
Instructions	*No Instructions*		

ROUTING LISTS

1	Responsible Manager	Active
	Review the PER and determine action required. Complete action and enter statement on TUF tab. 'Complete' the task in E-STARS and 'Close' in accordance with TFC-ESHQ-Q_C-C-01, Problem Evaluation Request.	
	• Brown, David W - Assign - Reassigned - 06/05/2009 0806 *Instructions:*	
	• Ficklin, Jim - Assign - Awaiting Response - Due Date - 11/30/2009 1630 *Instructions:*	
	• Brown, David W - Close - Reassigned - 06/05/2009 0806 *Instructions:* Verify the TUF Tab and close the task when complete	
	• Ficklin, Jim - Close - Awaiting Response - Due Date - 11/30/2009 1630 *Instructions:*	
2	Review Initial PER	Inactive
	Review New PER	
	• ^SO(Johnson, Brian A) - Review - Concur - 10/06/2008 1609 *Instructions:*	
	• ^PER Screening(Owen, Annette) - Review - Concur - 10/07/2008 1438 *Instructions:*	
	• ^Mgr Review(Owen, Annette) - Review - Concur - 10/08/2008 0806 *Instructions:*	

ATTACHMENTS

Attachments	1. FW_ Emailing_ PER_htm.msg 2. Link to PER 3. WRPS-PER-2008-0017.msg

COMMENTS

Poster	^PER Coordinator (Owen, Annette) - 01/05/2009 1054
	Extend to 5/31/09 per attached e-mail request.

Task# WRPS-PER-2008-0017

	This work is scheduled for the May maintenance campaign for C-Farm. This pit cover has fixative that has been applied before and has degraded. The pit cover is not ready to be foamed since construction work is still ongoing. Fixative cannot be applied effectively in the snow or wet weather.
Poster	^PER Coordinator (Owen, Annette) - 02/17/2009 0952
	Extend to 11/30/09 per attached e-mail request.
	Due to ongoing construction work and the recommendation from Retrieval Radcon below please extend PER WRPS-PER-2008-0017 until November 30, 2009 to allow for completion of C-104 retrieval construction activities in this area. This particular issue may be mitigated or addressed during the construction process at which time I will close the PER.

TASK DUE DATE HISTORY

Modified	02/17/2009 0952 - ^PER Coordinator (Owen, Annette)	**New Due Date**	11/30/2009 1630
Modified	01/05/2009 1053 - ^PER Coordinator (Owen, Annette)	**New Due Date**	05/31/2009 1630
Modified	10/08/2008 0806 - ^PER Coordinator	**New Due Date**	02/03/2009 1630
Modified	10/08/2008 0806 - ^PER Coordinator	**New Due Date**	02/07/2009 1630
Modified	10/06/2008 1416 - ^PER Coordinator	**New Due Date**	10/08/2008 1630

SUB TASK HISTORY

No Subtasks

-- end of report --

Message

From: Brown, David W
Sent: Tuesday, February 17, 2009 9:10 AM
To: ^WRPS Corrective Action Group
Cc: Brown, David W; Livesey, Stephanie H; Hopkins, Gary P; Carrothers, Bradley M
Subject: FW: Emailing: PER.htm

Due to ongoing construction work and the recommendation from Retrieval Radcon below please extend PER WRPS-PER-2008-0017 until November 30, 2009 to allow for completion of C-104 retrieval construction activities in this area. This particular issue may be mitigated or addressed during the construction process at which time I will close the PER.

Dave Brown

-----Original Message-----
From: Livesey, Stephanie H
Sent: Tuesday, February 10, 2009 10:12 AM
To: Brown, David W; Carrothers, Bradley M
Cc: Adams, Edward J; Smith, Donald K (Kent)
Subject: Re: Emailing: PER.htm

Dave,
We are currently working in this area and I see no need to do anything with this at this time. The levels are well within our planning envelope and also our posting criteria. I'm in training today, but will come talk to you on this tomorrow.
Thanks
Steph

----- Original Message -----
From: Brown, David W
To: Carrothers, Bradley M; Livesey, Stephanie H
Cc: Brown, David W
Sent: Tue Feb 10 07:32:50 2009
Subject: Emailing: PER.htm

Brad,

Here is the PER on the contamination found by the HPTs on the C-104 condenser pit cover that we plan to work during the upcoming C farm campaign. We need guidance from Steph on what she recommends we do for this issue since construction is working on C-104 and recovering it with foam is probably not an option. I believe she recommended spraying with fixative.

Dave

Save
Problem Evaluation Request (PER) WRPS-PER-2008-0017
In Process/Work

PER No	Date of Discovery	Time of Discovery (24:00)	Project
WRPS-PER-2008-0017	10/06/2008	14:00	Radcon-BO

Location
C Farm
How Was Problem Discovered
Radiological Surveys
Description of Concern or Problem
During the weekly contamination survey of C farm 75,000 dpm 100cm2 beta gamma <20 dpm 100cm2 was found on the C104 condenser pit cover.

Requirement Not Satisfied Source Document Number

Equipment Identification Number System Identification
C104 condeser pit
Immediate actions Taken or Planned
Notified shift manager and RCS. Also initiated A PER

Recommended Corrective actions
Paint or clean bare pit cover surface

Originator Contact
No
Originators Name Originators ID Originators Phone Date Initiated
Schroeder, Carl P (inactive) H0085895 (509) 373-2837 10/06/2008
SHIFT OPERATIONS REVIEW
Title
75,000 dpm 100cm2 beta gamma <20 dpm 100cm2 was found on the C104 condenser pit cover.
How Discovered Agency
self-ID prior to event
Reportability SSC Operability Operability Review Comp Measures Req
Non-Reportable N/A N/A
Describe actions Taken or Recommended
Forward PER to Fac. Mgr. for resolution. No additional BOSO actions required at this time.

SO Reviewer Name SO Reviewer ID SO Reviewer Phone SO Review Date
Johnson, Brian A H0003531 (509) 373-2696 10/06/2008
SCREENING
PER Significance Level
TUF
Independent Assessment Review Occurrence Report Number Externally Identified
No No
Assigned Responsible Manager Facilities Rep / SSO Safety Management Rep
Brown, David W
Program Safety Management Program

PER Screening Comments
This was an expected condition within the farm. CC: B Brannan, Gordon McKenzie. (Linda Glaman 10/7/08)
Causal Code

MGT/Comm/Train Human Performance GEMS Equip/Eng/Other

Failed Barrier ORPS Code Functional Area Work Process
Not Applicable Radiation Protection
* Radiological Contamination Control

ISMS Consequence Code
Identify and analyze hazards
PER Screening Chair PER Screening Chair ID PER Screening Chair Phone PER Screening Date
Owen, Annette H0054042 (509) 372-0533 10/07/2008
PAAA REVIEW
PAAA Screening PAAA Codes Function Codes
Not subject to PAAA
NTS Report Number NTS Report Date

Repetitive / Recurrent Programmatic Intentional Violation / Misrepresentation

No No No
PAAA Screening Comments

PAAA Reviewer Name PAAA Review Date
Anderson, Craig E 10/07/2008
PAAA Approver Name PAAA Approve Date
Anderson, Craig E 10/08/2008

SENIOR MANAGEMENT REVIEW/CONCURRENCE
TF Operations Morning Leadership Call
None.
Instructions for Responsible Manager
Review the PER and determine action required. Complete action and enter statement on TUF tab. 'Complete' the task in E-STARS and 'Close' in accordance with TFC-ESHQ-Q_C-C-01, Problem Evaluation Request.

Senior Management	Sr Mgmt ID	Sr Mgmt Phone	Sr Mgmt Review Date
Owen, Annette	H0054042	(509) 372-0533	10/08/2008

Track Until Fixed (TUF)
Action Taken

ATTACHMENTS
Link to PER
WRPS-PER-2008-0017.msg
AUDIT HISTORY

Change Date	Auditor	Comments
10/08/2008 08:06	Owen, Annette	Responsible Manager Task Launched by Owen, Annette

-- End of Report --
02/10/2009 07:30 AM

Message

From: Bowman, Tamara
Sent: Monday, January 05, 2009 9:56 AM
To: ^WRPS Corrective Action Group
Cc: Brown, David W; Ficklin, James W (Jim)
Subject: WRPS-PER-2008-0017

Please extend the above referenced PER as follows:

RM Dave Brown

Curr Due 2/07/09

Extend 5/31/09

This work is scheduled for the May maintenance campaign for C-Farm. This pit cover has fixative that has been applied before and has degraded. The pit cover is not ready to be foamed since construction work is still ongoing. Fixative cannot be applied effectively in the snow or wet weather.

Tami Bowman

washington river protection *solutions*
Safety & Health Programs
2704HV/D201E
W- 509-372-0031
C- 509-438-5268
F- 509-372-9673

Save

Problem Evaluation Request (PER)

WRPS-PER-2008-0019
Closed 04/27/2009 11:30

PER No	Date of Discovery	Time of Discovery (24:00)	Project
WRPS-PER-2008-0019	10/07/2008	09:09	Environmental

Location

All Tank Farms

How Was Problem Discovered

DOE FAC REP

Description of Concern or Problem

TFC-ESHQ-ENV_FS-C-01 (Environmental Notifications) has not been updated to incorporate the W-13 new ventilation systems into Table 1 (AN primary exhausters: 296-A-44 and 296-A-45) and (AW primary exhausters: 296-A-46 and 296-A-47) and to remove the inactivated AN and AW "old " primary exhausters (296-A-29 and 296-A-27).

Requirement Not Satisfied	Source Document Number

Equipment Identification Number	System Identification
	Ventilation Tank Primary

Immediate actions Taken or Planned

DOE Fact Rep made notification to Base Ops Environmental Rep. Environmental Field Rep informed Environmental Compliance Manager and will supply detail needed to be added to procedure to management.

Recommended Corrective actions

Procedure revision already taking place. (trend only)

Originator Contact

No

Originators Name	Originators ID	Originators Phone	Date Initiated
Faust, Toni L (inactive)	H3645131	*unavailable*	10/07/2008

SHIFT OPERATIONS REVIEW

Title

TFC-ESHQ-ENV_FS-C-01 (Environmental Notifications) has not been updated

How Discovered	Agency
FACREP Surveillance	

Reportability	SSC Operability	Operability Review	Comp Measures Req
Non-Reportable	N/A	N/A	

Describe actions Taken or Recommended

No additional BOSO actions required at this time.

SO Reviewer Name	SO Reviewer ID	SO Reviewer Phone	SO Review Date
Johnson, Brian A	H0003531	(509) 373-2696	10/07/2008

SCREENING

PER Significance Level	
TUF	

Independent Assessment Review	Occurrence Report Number	Externally Identified	
No		Yes	

Assigned Responsible Manager	Facilities Rep / SSO	Safety Management Rep	
Voogd, Jeffry A			

Program	Safety Management Program

PER Screening Comments			
Assigned to Jeff Voogd to complete on behalf of Paul Day. When TFC-ESHQ-ENV_FS-C-01 procedure revision is complete, attach electronic file and close PER. (nb 10/09/08)			
Causal Code			
MGT/Comm/Train	**Human Performance**	**GEMS**	**Equip/Eng/Other**
Failed Barrier	**ORPS Code**	**Functional Area**	**Work Process**
	Not Applicable	Environmental Protection	• Procedures: Preparation/Review
ISMS	**Consequence Code**		
Perform work within the controls	• Procedure - Administrative - Procedure ambiguous, in error, could not be worked, was not used		
PER Screening Chair	**PER Screening Chair ID**	**PER Screening Chair Phone**	**PER Screening Date**
Brown, Nancy L	H0088797	(509) 373-0992	10/08/2008
PAAA REVIEW			
PAAA Screening	**PAAA Codes**	**Function Codes**	
Not subject to PAAA			
NTS Report Number	**NTS Report Date**		
Repetitive / Recurrent	**Programmatic**	**Intentional Violation / Misrepresentation**	
No	No	No	
PAAA Screening Comments			
PAAA Reviewer Name	**PAAA Review Date**		
Anderson, Craig E	10/08/2008		
PAAA Approver Name	**PAAA Approve Date**		
Anderson, Craig E	10/09/2008		
SENIOR MANAGEMENT REVIEW/CONCURRENCE			
TF Operations Morning Leadership Call			
None. 10/9/08			
Instructions for Responsible Manager			
Review the PER and determine action required. Complete action and enter statement on TUF tab. 'Complete' the task in E-STARS and 'Close' in accordance with TFC-ESHQ-Q_C-C-01, Problem Evaluation Request.			
Senior Management	**Sr Mgmt ID**	**Sr Mgmt Phone**	**Sr Mgmt Review Date**
Owen, Annette	H0054042	(509) 372-0533	10/09/2008
Track Until Fixed (TUF)			
Action Taken			
Procedure TFC-ESHQ-ENV_FS-C-01, Rev E-15 was revised to deleted inactive exhausters and include new (W-314) exhausters, page 27, Table 1. Procedure was modified with these changes October 16, 2008.			
ATTACHMENTS			
Link to PER			
WRPS-PER-2008-0019 Extension.msg			
AUDIT HISTORY			
Change Date	**Auditor**	**Comments**	

10/08/2008 15:43	Brown, Nancy L	'PER Screening Comments' was changed.
10/09/2008 08:12	Owen, Annette	Responsible Manager Task Launched by Owen, Annette

-- End of Report --
04/27/2009 11:45 AM

Task# WRPS-PER-2008-0019			
E-STARS[R] Report Task Detail Report 04/27/2009 1145			
TASK INFORMATION			
Task#	WRPS-PER-2008-0019		
Subject	TUF; TFC-ESHQ-ENV_FS-C-01 (Environmental Notifications) has not been updated		
Parent Task#		Status	CLOSED 04/27/2009
Reference		Due	04/30/2009
Originator	^PER Coordinator	Priority	Medium
Originator Phone		Category	PER
Origination Date	10/07/2008 0931	Generic1	None
Remote Task#		Generic2	None
Deliverable	PER Review	Generic3	None
Class	None	View Permissions	Global
Instructions	*No Instructions*		
ROUTING LISTS			
1	Responsible Mgr - TUF Reopen		Inactive
	Please Complete TUF tab before closing ESTARS Task		
	• Voogd, Jeffry A - Assign - Completed with comments - 04/27/2009 1110 *Instructions:* Please Complete TUF tab before closing ESTARS Task		
	• Voogd, Jeffry A - Close - Closed with comments - 04/27/2009 1115 *Instructions:* Please Complete TUF tab before closing ESTARS Task		
2	Responsible Manager		Inactive
	Review the PER and determine action required. Complete action and enter statement on TUF tab. 'Complete' the task in E-STARS and 'Close' in accordance with TFC-ESHQ-Q_C-C-01, Problem Evaluation Request.		
	• Voogd, Jeffry A - Assign - Completed with comments - 12/11/2008 1355 *Instructions:*		
	• Voogd, Jeffry A - Close - Closed with comments - 12/11/2008 1358 *Instructions:* Verify the TUF Tab and close the task when complete		
3	Review Initial PER		Inactive
	Review New PER		
	• ^SO(Johnson, Brian A) - Review - Concur - 10/07/2008 0944		

Task# WRPS-PER-2008-0019			
	Instructions:		
	• ^PER Screening(Brown, Nancy L) - Review - Concur - 10/08/2008 1454 *Instructions:*		
	• ^Mgr Review(Owen, Annette) - Review - Concur - 10/09/2008 0811 *Instructions:*		
ATTACHMENTS			
Attachments	1. Link to PER 2. WRPS-PER-2008-0019 Extension.msg		
COMMENTS			
Poster	Voogd, Jeffry A (Dunigan, Beth) - 12/11/2008 1355		
	Completed		
	Revised Environmental Notification Procedure 10/16/08, including exhauster identification.		
Poster	Voogd, Jeffry A (Dunigan, Beth) - 12/11/2008 1358		
	CLOSED		
	Revised Environmental Notification procedure 10/16/08, including updated exhauster identification.		
Poster	^PER Coordinator - 12/11/2008 1400		
	Task Re-Open		
	The ESTARS Task can not be closed because the TUF Tab has Not Completed		
Poster	^PER Coordinator (Owen, Annette) - 02/05/2009 0913		
	Extend to 4/30/04 per form A-6003-227.		
	This modification of a procedure is being worked with other similar changes simultaneously. Jeff Voogd.		
Poster	Voogd, Jeffry A - 04/27/2009 1110		
	Completed		
	The Exhauster references were updated with the October 16, 2008 revision of TFC-ESHQ-ENV_FS-C-01 Rev E-15, page 27 of 71, Table 1.		
Poster	Voogd, Jeffry A - 04/27/2009 1115		
	CLOSED		
	TUF tab has been completed. Procedure TFC-ESHQ-ENV_FS-C-01, Rev. E-15 was modified october 16, 2008 on page 27, Table 1 to update the exhauster listing.		
TASK DUE DATE HISTORY			
	02/05/2009 0912 - ^PER Coordinator		

Task# WRPS-PER-2008-0019			
Modified	(Owen, Annette)	New Due Date	04/30/2009 1630
Modified	10/09/2008 0812 - ^PER Coordinator	New Due Date	02/04/2009 1630
Modified	10/09/2008 0812 - ^PER Coordinator	New Due Date	02/08/2009 1630
Modified	10/07/2008 0931 - ^PER Coordinator	New Due Date	10/09/2008 1630
SUB TASK HISTORY			
No Subtasks			
-- end of report --			

Message

From: Dunigan, Beth A
Sent: Thursday, February 05, 2009 8:25 AM
To: ^WRPS Corrective Action Group
Subject: WRPS-PER-2008-0019 Extension

Please extend WRPS-PER-2008-0019 until April 30, 2009.

This modification of a procedure is being worked with other similar changes simultaneously. PER is TUF.

Beth
2/5
8:25 a.m.

Save

Problem Evaluation Request (PER)

WRPS-PER-2008-0033
Closed 12/16/2008 16:00

PER No	Date of Discovery	Time of Discovery (24:00)	Project
WRPS-PER-2008-0033	10/08/2008	09:00	Radcon-BO

Location

SY Farm

How Was Problem Discovered

General Observation

Description of Concern or Problem

WHY ARE THE TRANSFER LINES NOT POSTED "WASTE TRANSFER ZONE" JUST LIKE IN AN FARM. THE POSTING OG RAD-CON AREAS SHOULD BE POSTED SAME IN ALL FARMS CA.

Requirement Not Satisfied	Source Document Number

Equipment Identification Number	System Identification
YELLOW AND GRAY STEAL PLATES	Waste Transfer

Immediate actions Taken or Planned

PER

Recommended Corrective actions

POST SY FARM JUST LIKE AN FARM THE SAME STANDARD USED IN ALL FARMS.

Originator Contact

I would like to review the the corrective actions at closure to ensure they were effective

Originators Name	Originators ID	Originators Phone	Date Initiated
Arave, Doug H	H0042732	(509) 373-2526	10/08/2008

SHIFT OPERATIONS REVIEW

Title

TRANSFER LINES NOT POSTED 'WASTE TRANSFER ZONE'

How Discovered	Agency
self-ID prior to event	

Reportability	SSC Operability	Operability Review	Comp Measures Req
Non-Reportable	N/A	N/A	

Describe actions Taken or Recommended

No additional actions taken or recommended by Base Ops SO

SO Reviewer Name	SO Reviewer ID	SO Reviewer Phone	SO Review Date
Johnson, Brian A	H0003531	(509) 373-2696	10/08/2008

SCREENING

PER Significance Level	
PIE/CIM	

Independent Assessment Review	Occurrence Report Number	Externally Identified	
No		No	

Assigned Responsible Manager	Facilities Rep / SSO	Safety Management Rep	
Cato, Joe E			

Program	Safety Management Program
• **N/A**	• **N/A**

PER Screening Comments

None.			
Causal Code			
MGT/Comm/Train	**Human Performance**	**GEMS**	**Equip/Eng/Other**
Failed Barrier	**ORPS Code**	**Functional Area**	**Work Process**
	Not Applicable	Operations	• Safety Signs, Tags, Barriers and Color Coding
ISMS	**Consequence Code**		
Develop and implement hazard controls	• Communications - Inadequate communications, roles, responsibilities		
PER Screening Chair	**PER Screening Chair ID**	**PER Screening Chair Phone**	**PER Screening Date**
Owen, Annette	H0054042	(509) 372-0533	10/09/2008
PAAA REVIEW			
PAAA Screening	**PAAA Codes**	**Function Codes**	
Not subject to PAAA			
NTS Report Number	**NTS Report Date**		
Repetitive / Recurrent	**Programmatic**	**Intentional Violation / Misrepresentation**	
No	No	No	
PAAA Screening Comments			
PAAA Reviewer Name	**PAAA Review Date**		
Anderson, Craig E	10/09/2008		
PAAA Approver Name	**PAAA Approve Date**		
Anderson, Craig E	10/10/2008		
SENIOR MANAGEMENT REVIEW/CONCURRENCE			
TF Operations Morning Leadership Call			
None. 10/10/08			
Instructions for Responsible Manager			
Evaluate suggestion, enter comments and required actions on PIE/CIM tab of the PER. Disposition in accordance with TFC-ESHQ-Q_C-C-01, Problem Evaluation Request.			
Senior Management	**Sr Mgmt ID**	**Sr Mgmt Phone**	**Sr Mgmt Review Date**
Owen, Annette	H0054042	(509) 372-0533	10/10/2008
CAUSE ANALYSIS			
Description of Occurrence			
Extent of Condition			
Safety Significance			
Generic Implications			
Remedial Corrective Action			

Causal Analysis, Apparent Cause and/or Root Cause Analysis
PIE/CIM
Evaluation of PIE/CIM Initiative
Prior to resuming waste retrieval operations in SY Farm, the transfer lines will be posted per operations procedures.
ATTACHMENTS
FW_ WRPS-PER-2008-0033 - Transfer Request.msg
Link to PER
RE_ Just a Transfer PER WRPS-PER-2008-0033.msg
WRPS-PER-2008-0033 for PER screening on 10_9_2008.msg

AUDIT HISTORY

Change Date	Auditor	Comments
10/09/2008 09:32	Anderson, Craig E	PAAA Screening Changed PAAA Codes Changed PAAA Function Codes Changed
10/09/2008 10:16	Glaman, Linda R	'Requirement Not Satisfied' was changed. 'Source Document Number Available' was changed. Erroneous requirement and source document citations removed from PER at the request of Rad Con representative; see attachment WRPS-PER-2008-0033 screening on 10/9/1008. L Glaman 19-9-08
10/10/2008 08:35	Owen, Annette	Responsible Manager Task Launched by Owen, Annette
11/06/2008 10:57	Owen, Annette	'Screening Program' was changed. 'Screening Safety Managemnt Program' was changed. 'Assigned Responsible Manager' was changed.
12/05/2008 07:48	Owen, Annette	'Assigned Responsible Manager' was changed.
12/11/2008 15:05	Brown, Nancy L	'PER Title' was changed to remove quotes causing display error

-- End of Report --
12/16/2008 04:15 PM

Task# WRPS-PER-2008-0033			
E-STARS[R] Report Task Detail Report 12/16/2008 0415			
TASK INFORMATION			
Task#	WRPS-PER-2008-0033		
Subject	PIE; TRANSFER LINES NOT POSTED: WASTE TRANSFER ZONE		
Parent Task#		Status	CLOSED 12/16/2008
Reference		Due	01/05/2009
Originator	^PER Coordinator	Priority	Medium
Originator Phone		Category	PER
Origination Date	10/08/2008 1510	Generic1	None
Remote Task#		Generic2	None
Deliverable	PER Review	Generic3	None
Class	None	View Permissions	Global
Instructions	*No Instructions*		
ROUTING LISTS			
1	Responsible Manager		Inactive
	Evaluate suggestion, enter comments and required actions on PIE/CIM tab of the PER. Disposition in accordance with TFC-ESHQ-Q_C-C-01, Problem Evaluation Request.		
	• Brooks, Rocky L - Assign - Withdrawn - 11/06/2008 1056 *Instructions:*		
	• Brooks, Rocky L - Assign - Withdrawn - 11/06/2008 1056 *Instructions:* Did you contact the originator about the PER? Document your contact in the response window.		
	• Ringo, Steven D - Assign - Withdrawn - 12/05/2008 0746 *Instructions:*		
	• Ringo, Steven D - Close - Withdrawn - 11/06/2008 1056 *Instructions:*		
	• Cato, Joe E - Assign - Completed with comments - 12/08/2008 1334 *Instructions:*		
2	Review Initial PER		Inactive
	Review New PER		
	• ^SO(Johnson, Brian A) - Review - Concur - 10/08/2008 1514 *Instructions:*		

Task# WRPS-PER-2008-0033			
	• ^PER Screening(Owen, Annette) - Review - Concur - 10/09/2008 1456 *Instructions:*		
	• ^Mgr Review(Owen, Annette) - Review - Concur - 10/10/2008 0835 *Instructions:*		
ATTACHMENTS			
Attachments	1. FW_ WRPS-PER-2008-0033 - Transfer Request.msg 2. Link to PER 3. RE_ Just a Transfer PER WRPS-PER-2008-0033.msg 4. WRPS-PER-2008-0033 for PER screening on 10_9_2008.msg		
COLLABORATION			
COMMENTS			
Poster	^PER Coordinator (Owen, Annette) - 11/06/2008 1011		
	Transfer from Rocky Brooks to Steve Ringo per attached e-mail request.		
	Please transfer PER from Rocky Brooks to Steven Ringo, transfer manager for Base Operations.		
Poster	^PER Coordinator (Owen, Annette) - 12/05/2008 0712		
	Extend to 1/5/09, Transfer from Ringo to Cato per attached e-mail request.		
	My opinion without having been in on the discussion, is that SY Farm is not an active retrieval nor is it imminent. No posting required. C/AN, has recently had waste in the line and we will be continuing with transfers in the very near future. Posting could remain. I'll look at the PER and decide what I feel is appropriate. I don't want to get into a situation that requires postings up in the morning and down each evening when we go home. The requirements for entry in the WTZ are not hard to meet.		
Poster	Cato, Joe E - 12/08/2008 0112		
	Completed		
	Prior to resuming retrieval operations in SY Farm, posting will be installed per operations procedures.		
Poster	^PER Coordinator (Glaman, Linda R) - 12/16/2008 0312		
	CLOSED		
	PER complete. L Glaman		
TASK DUE DATE HISTORY			
Modified	12/05/2008 0823 - ^PER Coordinator (Owen, Annette)	New Due Date	01/05/2009 1630
Modified	10/10/2008 0835 - ^PER Coordinator	New Due Date	12/07/2008 1630

Task# WRPS-PER-2008-0033			
Modified	10/10/2008 0835 - ^PER Coordinator	New Due Date	12/07/2008 1630
Modified	10/08/2008 1510 - ^PER Coordinator	New Due Date	10/10/2008 1630
SUB TASK HISTORY			
No Subtasks			
-- end of report --			

Message

From: Alexander, Sandy K

Sent: Wednesday, November 05, 2008 2:06 PM

To: ^WRPS Corrective Action Group

Subject: FW: WRPS-PER-2008-0033 - Transfer Request

Please transfer WRPS-PER-2008-0033 (PIE/CIM) from Rocky Brooks to Steven Ringo per Steve's concurrence noted below.

Thank You,
Sandy Alexander
373-0064
Corrective Action Management & RapidWeb
Support for Analytical Technical Services (ATS)

From: Ringo, Steven D
Sent: Wednesday, November 05, 2008 1:57 PM
To: Alexander, Sandy K
Subject: RE: WRPS-PER-2008-0033 - Transfer Request

I concur with the transfer.

Thank you,
Steven D. Ringo
Waste Transfer Manager
Base Operations
438-9763

From: Alexander, Sandy K
Sent: Wednesday, November 05, 2008 12:43 PM
To: Ringo, Steven D
Cc: ^WRPS Corrective Action Group; Brooks, Rocky L
Subject: WRPS-PER-2008-0033 - Transfer Request

Steve,

If you agree with the requested transfer, please forward this message to ^WRPS Corrective Action Group indicating your approval.

CH2M-PER-2008-0033 (PIE/CIM)
Current RM: Rocky Brooks

Please transfer PER from Rocky Brooks to Steven Ringo, transfer manager for Base Operations.

Thank You,
Sandy Alexander
373-0064
Corrective Action Management & RapidWeb
Support for Analytical Technical Services (ATS)

Message

From: Skaggs, Kristi A
Sent: Friday, December 05, 2008 7:49 AM
To: ^WRPS Corrective Action Group
Cc: Ringo, Steven D
Subject: RE: Just a Transfer PER WRPS-PER-2008-0033

yeah since Ringo owns it give the new owner 30 days to disposition

New Due Date 1/5/2009

thanks Annette!

Kristi Skaggs
washington**river**
protection*solutions*

From: ^WRPS Corrective Action Group
Sent: Friday, December 05, 2008 7:47 AM
To: Skaggs, Kristi A
Subject: RE: Just a Transfer PER WRPS-PER-2008-0033

Do you want to extend it as well? Its due 12/7/08.

From: Skaggs, Kristi A
Sent: Thursday, December 04, 2008 1:27 PM
To: ^WRPS Corrective Action Group
Subject: Just a Transfer PER WRPS-PER-2008-0033

please transfer the above PER to Joseph Cato he agreed to take it below from Steven Ringo. Justification is below also.

Kristi Skaggs
washington**river**
protection*solutions*

From: Ringo, Steven D
Sent: Thursday, December 04, 2008 10:20 AM
To: Skaggs, Kristi A
Subject: FW: PER WRPS-PER-2008-0033

Please transfer subject PER to Joseph Cato for disposition.

Thank you,

Steven D. Ringo
Waste Transfer Manager
Base Operations
438-9763
washingtonriver protectionsolutions

From: Cato, Joseph E
Sent: Thursday, December 04, 2008 9:51 AM
To: Ringo, Steven D
Subject: RE: PER WRPS-PER-2008-0033

I have no problem with receiving this PER. My opinion without having been in on the discussion, is that SY Farm is not an active retrieval nor is it imminent. No posting required. C/AN, has recently had waste in the line and we will be continuing with transfers in the very near future. Posting could remain.
I'll look at the PER and decide what I feel is appropriate. I don't want to get into a situation that requires postings up in the morning and down each evening when we go home. The requirements for entry in the WTZ are not hard to meet.

From: Ringo, Steven D
Sent: Thursday, December 04, 2008 8:46 AM
To: Cato, Joseph E
Cc: Skaggs, Kristi A
Subject: RE: PER WRPS-PER-2008-0033

Joseph,
Please consider the transfer of subject PER from myself to you as the evaluation request was misinterpreted as far as the responsible manager.

Thank you,

Steven D. Ringo
Waste Transfer Manager
Base Operations
438-9763
washingtonriver protectionsolutions

From: Tucker, Ronald P
Sent: Wednesday, December 03, 2008 3:06 PM
To: Ringo, Steven D
Cc: Skaggs, Kristi A; Cato, Joseph E
Subject: RE: PER WRPS-PER-2008-0033

Steve,

I agree with you, but I am also in Base Operations. Probably needs to go to someone like Joe Cato who is the operations manager for Retrievals. Joe, are you PER capable yet?

Ron

From: Ringo, Steven D
Sent: Wednesday, December 03, 2008 2:34 PM
To: Tucker, Ronald P
Cc: Skaggs, Kristi A
Subject: PER WRPS-PER-2008-0033

Ron,
I sat down with the initiator of this PER (Doug Arave- Base Ops HPT) today to discuss this PER. In my discussion with him, I realized right away that this is not my PER to go fix.

This PER was written because he wants to see consistency with respect to how the Waste Transfer Zones are posted for the above ground HIHTL. Specifically, C-Farm to AN Farm, the WTZ is still in place without transfers in progress. When he goes to other farms such as SY Farm, the same HIHTL are present but are not posted. He wants one of two things to happen:

1. Post all the WTZ whether active or not as WTZ and control them the same as in AN Farm, OR
2. Down post the WTZ in AN Farm unless the transfer line is active.

Either way, this PER should belong to retrieval operations as I do not use WTZ for any of my transfers. Do you agree?

Thank you,

Steven D. Ringo
Waste Transfer Manager
Base Operations
438-9763
washington**river**
protection*solutions*

Message

From: Hanni, Jonathan B

Sent: Thursday, October 09, 2008 10:04 AM

To: Glaman, Linda

Cc: Owen, Annette; Maciuca, Constantin; Anderson, Craig E; Mata, Beth L; White, Don (CH2M)

Subject: WRPS-PER-2008-0033 for PER screening on 10/9/2008

Linda,

As I mentioned during our phone conversation, the originator of WRPS-PER-2008-0033 was in error regarding the requirements for posting "Waste Transfer Zone" signs. Such signs are outside the scope of the RadCon program; they are not radiological signs as defined in 10 CFR 835, nor are they included in HNF-5183, *Tank Farms Radiological Control Manual (TFCRM)* (which is incorrectly referenced as HNF-5153 in the PER). I think it would be appropriate to remove the citations to HNF-5153 from the "Requirement Not Satisfied" and "Source Document Number" fields as the document does not apply to the "Waste Transfer Zone" signs.

Thanks,

Jonathan B. Hanni
Radiological Control Program
2750E/C-113/200 East, MSIN: R1-05
Office: 509-373-4017, Cell: 509-619-3568
Fax: 509-372-3522

Save

Problem Evaluation Request (PER)

WRPS-PER-2008-0034
Closed 02/03/2009 10:45

PER No	Date of Discovery	Time of Discovery (24:00)	Project
WRPS-PER-2008-0034	10/08/2008	15:30	Maintenance

Location

All Tank Farms

How Was Problem Discovered

DNFSB

Description of Concern or Problem

The DNFSB noted that assessments of maintenance programs during 2006 and 2007 failed to evaluate several key aspects of the maintenance program and noted that the Maintenance Implementation Plan does not require each element to be periodically evaluated.

Requirement Not Satisfied	Source Document Number
"An evaluation of each maintenance program element should be conducted at least every other year ..."	DOE O 433.1A
Equipment Identification Number	**System Identification**

Immediate actions Taken or Planned

none required

Recommended Corrective actions

Evaluate changing the Maintenance Implementation Plan and/or procedures to ensure the requirement to evaluate each MIP element biannually is captured and implemented

Originator Contact

I want the lead to correct the problem

Originators Name	Originators ID	Originators Phone	Date Initiated
Hampton, Cliff	H4255200	(509) 373-5205	10/08/2008

SHIFT OPERATIONS REVIEW

Title

DNFSB assessments of maintenance programs

How Discovered	Agency
Externally Identified	DNFSB

Reportability	SSC Operability	Operability Review	Comp Measures Req
Non-Reportable	N/A	N/A	

Describe actions Taken or Recommended

No additional actions taken or recommended by Base Ops SO

SO Reviewer Name	SO Reviewer ID	SO Reviewer Phone	SO Review Date
Johnson, Brian A	H0003531	(509) 373-2696	10/08/2008

SCREENING

PER Significance Level			
PIE/CIM			
Independent Assessment Review	**Occurrence Report Number**	**Externally Identified**	
No		Yes	
Assigned Responsible Manager	**Facilities Rep / SSO**	**Safety Management Rep**	
Tucker, Ron			
Program		**Safety Management Program**	

PER Screening Comments			
None.			
Causal Code			
MGT/Comm/Train	**Human Performance**	**GEMS**	**Equip/Eng/Other**
Failed Barrier	**ORPS Code**	**Functional Area**	**Work Process**
	Not Applicable	Maintenance	• Assessments
ISMS	**Consequence Code**		
Define scope of work	• **N/A** - No consequence code applies		
PER Screening Chair	**PER Screening Chair ID**	**PER Screening Chair Phone**	**PER Screening Date**
Owen, Annette	H0054042	(509) 372-0533	10/09/2008
PAAA REVIEW			
PAAA Screening	**PAAA Codes**	**Function Codes**	
PAAA, Non-NTS Reportable	• 10 CFR 830.122 (e)(1) • 10 CFR 830.122 (i)	• Maintenance • Performance Assessment (including walk downs)	
NTS Report Number	**NTS Report Date**		
Repetitive / Recurrent	**Programmatic**	**Intentional Violation / Misrepresentation**	
No	No	No	
PAAA Screening Comments			
PAAA Reviewer Name	**PAAA Review Date**		
Anderson, Craig E	10/09/2008		
PAAA Approver Name	**PAAA Approve Date**		
Anderson, Craig E	10/10/2008		
SENIOR MANAGEMENT REVIEW/CONCURRENCE			
TF Operations Morning Leadership Call			
None. 10/10/08			
Instructions for Responsible Manager			
Evaluate suggestion, enter comments and required actions on PIE/CIM tab of the PER. Disposition in accordance with TFC-ESHQ-Q_C-C-01, Problem Evaluation Request.			
Senior Management	**Sr Mgmt ID**	**Sr Mgmt Phone**	**Sr Mgmt Review Date**
Owen, Annette	H0054042	(509) 372-0533	10/10/2008
CAUSE ANALYSIS			
Description of Occurrence			
Extent of Condition			
Safety Significance			
Generic Implications			
Remedial Corrective Action			

Causal Analysis, Apparent Cause and/or Root Cause Analysis		
CORRECTIVE ACTIONS		
Actionee	**Action Due Date**	**E-STARS Number**
Hampton, Cliff	01/30/2009	WRPS-PER-2008-0034.1
Action		
Include the 18 maintenance program elements identified in DOE 433.1A ("Maintenance Management Program for DOE Nuclear Facilities") into the formal WRPS Management Assessment schedule. Nine elements will be assessed each year, commencing in 2009.		
Corrective Action Attachments		
• Link to PER • WRPS-PER-2008-0034.1 WRPS_Assessment_Schedule_-_FY2009_Rev_2.pdf		
PIE/CIM		
Evaluation of PIE/CIM Initiative		
This initiative will be adopted, although no revision of the WRPS Maintenance Implementation Plan nor associated procedures will be required . Please see details of corrective action below.		
ATTACHMENTS		
Link to PER		
AUDIT HISTORY		
Change Date	**Auditor**	**Comments**
10/09/2008 07:09	Anderson, Craig E	PAAA Codes Changed PAAA Function Codes Changed
10/10/2008 08:35	Owen, Annette	Responsible Manager Task Launched by Owen, Annette
12/05/2008 07:50	Glaman, Linda R	Corrective actions Launched by Glaman, Linda R

-- End of Report --
02/03/2009 10:45 AM

Task# WRPS-PER-2008-0034			
E-STARS[R] Report Task Detail Report 02/03/2009 1045			
TASK INFORMATION			
Task#	WRPS-PER-2008-0034		
Subject	PIE; DNFSB assessments of maintenance programs		
Parent Task#		Status	CLOSED 02/03/2009
Reference		Due	02/17/2009
Originator	^PER Coordinator	Priority	Medium
Originator Phone		Category	PER
Origination Date	10/08/2008 1545	Generic1	None
Remote Task#		Generic2	None
Deliverable	PER Review	Generic3	None
Class	None	View Permissions	Global
Instructions	*No Instructions*		
ROUTING LISTS			
1	Corrective actions Routing Lis		Inactive
	To launch Corrective actions.		
	• ^PER CAs(Owen, Annette) - Assign - Completed - 02/03/2009 1038 *Instructions:*		
2	Responsible Manager		Inactive
	Evaluate suggestion, enter comments and required actions on PIE/CIM tab of the PER. Disposition in accordance with TFC-ESHQ-Q_C-C-01, Problem Evaluation Request.		
	• Tucker, Ron - Assign - Completed with comments - 12/04/2008 0901 *Instructions:*		
	• Tucker, Ron - Assign - Completed with comments - 12/04/2008 0903 *Instructions:* Did you contact the originator about the PER? Document your contact in the response window.		
3	Review Initial PER		Inactive
	Review New PER		
	• ^SO(Johnson, Brian A) - Review - Concur - 10/08/2008 1603 *Instructions:*		
	• ^PER Screening(Owen, Annette) - Review - Concur - 10/09/2008 1458		

Task# WRPS-PER-2008-0034			
	Instructions:		
	• ^Mgr Review(Owen, Annette) - Review - Concur - 10/10/2008 0835 *Instructions:*		
ATTACHMENTS			
Attachments	1. Link to PER		
COLLABORATION			
COMMENTS			
Poster	Tucker, Ron (Ficklin, Jim) - 12/04/2008 0912		
	Completed		
	PIE/CIM evaluation complete; see updated PER for details & corrective action to be assigned. PER originator will be involved in the resolution.		
Poster	Tucker, Ron (Ficklin, Jim) - 12/04/2008 0912		
	Completed		
	The PER originator is unavailable until 12/8/09, but has been involved in discussions regarding the resolution & has been assigned the corrective action for resolution as per his request in the subject PER.		
Poster	^PER Coordinator (Owen, Annette) - 02/03/2009 1002		
	CLOSED		
	All Corrective Actions closed.		
TASK DUE DATE HISTORY			
Modified	12/05/2008 0750 - ^PER Coordinator	New Due Date	02/17/2009 0000
Modified	12/05/2008 0750 - ^PER Coordinator	New Due Date	02/13/2009 0000
Modified	10/10/2008 0835 - ^PER Coordinator	New Due Date	12/07/2008 1630
Modified	10/10/2008 0835 - ^PER Coordinator	New Due Date	12/07/2008 1630
Modified	10/08/2008 1545 - ^PER Coordinator	New Due Date	10/10/2008 1630
SUB TASK HISTORY			
Subtask#	WRPS-PER-2008-0034.1		
Subject	WRPS-PER-2008-0034; PIE; Include the 18 maintenance program elements identified in DOE 433.1A ("Maintenance Management Program for DOE Nuclear Facilit		
Originator	^PER CAs		
	Routing List	*No Active Routing List*	

Task# WRPS-PER-2008-0034
-- end of report --

Task# WRPS-PER-2008-0034.1			
E-STARS[R] Report Task Detail Report 02/03/2009 1045			
TASK INFORMATION			
Task#	WRPS-PER-2008-0034.1		
Subject	WRPS-PER-2008-0034; PIE; Include the 18 maintenance program elements identified in DOE 433.1A ("Maintenance Management Program for DOE Nuclear Facilit		
Parent Task#	WRPS-PER-2008-0034	Status	CLOSED 02/03/2009
Reference	WRPS-PER-2008-0034	Due	02/09/2009
Originator	^PER CAs	Priority	Medium
Originator Phone		Category	PER
Origination Date	12/05/2008 0750	Generic1	None
Remote Task#		Generic2	None
Deliverable	PER Review	Generic3	None
Class	None	View Permissions	Global
Instructions	*No Instructions*		
ROUTING LISTS			
1	Corrective Action		Inactive
	Include the 18 maintenance program elements identified in DOE 433.1A ("Maintenance Management Program for DOE Nuclear Facilities") into the formal WRPS Management Assessment schedule. Nine elements will be assessed each year, commencing in 2009. RESPONSIBLE MANAGER: When this corrective action is complete, enter a closure statement in E-STARS and close the E-STARS subtask. Refer to the Problem Evaluation Request procedure TFC-ESHQ-Q-C-C-01, Section 4.4 for closure documentation requirements		
	• Hampton, Cliff - Assign - Completed with comments - 01/13/2009 0743 *Instructions:*		
	• Tucker, Ron - Review - Concur with comments - 01/26/2009 1335 *Instructions:*		
ATTACHMENTS			
Attachments	1. Link to PER 2. WRPS-PER-2008-0034.1 WRPS_Assessment_Schedule_-_FY2009_Rev_2.pdf		
COLLABORATION			
COMMENTS			

Task# WRPS-PER-2008-0034.1			
Poster	Hampton, Cliff - 01/13/2009 0701		
	Completed		
	The Maintenance Implementation Plan is being rewriten and requires DOE-ORP approval. This document will spell out the maintenance elements that WRPS will be required to implement and will reflect the necessary assessments to ensure compliance and process improvement.		
Poster	Hampton, Cliff - 01/13/2009 0701		
	Completed		
	The current managment assessment schedule for FY-2009 has a maintenance management assessment looking at half of the suggested elements, and currently the ORP is conducting an assessment of maintenance that will help define areas needing further evaluation		
Poster	Tucker, Ron (Ficklin, Jim) - 01/26/2009 0101		
	Concur		
	Concur. The 2009 WRPS Management Assessment Schedule has been attached to the TDR, documenting assessment of the first nine elements in 2009. See page 11, Item FY2009-OPS-S-0324 (DOE O 433.1A CRD Elements A-I), scheduled on 6/30/09.		
Poster	^PER CAs (Owen, Annette) - 02/03/2009 1002		
	CLOSED		
	Closure statement and attached documentation are adequate to close this action.		
TASK DUE DATE HISTORY			
Modified	12/05/2008 0750 - ^PER CAs	New Due Date	02/09/2009 0000
Modified	12/05/2008 0750 - ^PER CAs	New Due Date	02/13/2009 0000
SUB TASK HISTORY			
No Subtasks			
-- end of report --			

FY2009

WRPS
Integrated Assessment Schedule
Rev 2

Lee Penick, Schedule Maintenance
373-6573

Tino Maciuca, Performance Assurance and Corrective Action Management Manager

1/14/09

The Integrated Assessment Schedule serves as a Schedule and Index to find assessments by keywords, month, and year, including ORP assessments of WRPS.

Revision Status Page

Rev 0 - New schedule for FY09. Includes ORP assessments. Approved by the ESRB 11/4/2008.

Rev 1 - M-0136 added. S-327 moved to Jan. Updated DOE ORP assessments.

Rev 2 - M-0102 and M-0116 postponed until Jan 2009. Updated DOE ORP assessments.

FY2009 - WRPS Integrated Assessment Schedule

Changed during schedule Rev#:

Organization	ID No.	Due	Completed	Team Lead	Title
October 2008					
ORP					
Completed		10/24/2008	10/24/2008	G Trenchard	Monthly Cost/Scope/Technical Perf/EVMS Rvw. Surv
Completed		10/31/2008	10/31/2008	B Harkins	Routine Surveillances (October)

FY2009 - WRPS Integrated Assessment Schedule

Organization	ID No.	Due	Completed	Team Lead	Title	Changed during schedule Rev#:
November 2008						
ESHQ						
Completed	FY2009-ESHQ-S-0347	11/30/2008	12/2/2008	Cannon, J	Subcontractor Flowdown of NQA-1 Requirements	Rev 0
ORP						
Completed		11/19/2008	11/19/2008	PR Hernandez	Accident/injury Reporting (CAIRS) Surveillance	
Completed		11/26/2008	11/26/2008	G Trenchard	Monthly Cost/Scope/Technical Perf/EVMS Rvw. Surv	
Completed		11/26/2008	11/26/2008	B Harkins	Routine Surveillances (November)	
Completed		11/26/2008	11/26/2008	R Koll	USQ annual assessment of TOC	
Completed		11/26/2008	11/26/2008	B Harkins	ATL ISM Verfification Assessment	

FY2009 - WRPS Integrated Assessment Schedule

Organization	ID No.	Due	Completed	Team Lead	Title	Changed during schedule Rev#:
December 2008						
BASE OPS						
Completed	FY2009-OPS-S-0344	12/31/2008	12/31/2008	Hampton, C	Fire Systems Maintenance Work Management	Rev 0
ESHQ						
Completed	FY2009-ESHQ-S-0305	12/31/2008	11/13/2008	Dunbar, K	PNNL Laboratory Information Management System - Vadose Zone Program push mode samples	Rev 0
ORP						
Completed		12/10/2008	12/10/2008	DH Irby	SSO Assessment of W-314 Exhauster Upgrade	
Completed		12/12/2008	12/12/2008	T Hoertkorn	Emergency Mgnt. Surveillance (DOE O 151.C)	
Completed		12/18/2008	12/18/2008	PR Hernandez	Accident/injury Reporting (CAIRS) Surveillance	
scheduled		12/19/2008		B Harkins	C Farm Pumping IVR Surveillance	
Completed		12/19/2008	12/19/2008	G Trenchard	Transition Safety Oversight Plan Surveillance	
Completed		12/31/2008	12/31/2008	G Trenchard	Monthly Cost/Scope/Technical Perf/EVMS Rvw. Surv	
Completed		12/31/2008	12/31/2008	B Harkins	Routine Surveillances (December)	
Scheduled		12/31/2008		B Harkins	S-102 CAP Corrective Action Effectiveness Review	

FY2009 - WRPS Integrated Assessment Schedule

Organization	ID No.	Due	Completed	Team Lead	Title	Changed during schedule Rev#:
				January 2009		
BASE OPS						
Scheduled	FY2009-OPS-M-0103	1/31/2009		Raven, R	Software QA (242-A Evaporator)	Rev 0
Scheduled	FY2009-OPS-M-0120	1/31/2009		Hyman, S	Conduct of Radiological Ops (focus areas: postings, personnel, errors)	Rev 0
Business Operations						
Rescheduled	FY2009-BO-M-0102	1/30/2009		Vacca, J	Program Level Software Quality Assurance	Rev 2
ESHQ						
Scheduled	FY2009-WRPS-I-0001	1/31/2009		Maciuca, T	Software Quality Assurance	Rev 0
Rescheduled	FY2009-ESHQ-M-0116	1/19/2009		Bump, S	Industrial Hygiene (SMP)	Rev 2
Rescheduled	FY2009-ESHQ-S-0327	1/15/2009		Brown, B	835.401(b), Instrumentation and equipment used for monitoring (Triennial)	Rev 1
Scheduled	FY2009-ESHQ-S-0310	1/31/2009		Tuckness, D	Permit Required Confined Space Permits	Rev 0
ORP						
scheduled		1/16/2009		W Scott	Waste Operations Engineering Assessment	
scheduled		1/23/2009		M Ryan	ATL-QA manual annual submtl rvw assessment	
scheduled		1/30/2009		J Adams	Maintenance Program Integrated Assessment	
scheduled		1/30/2009		G Trenchard	Monthly Cost/Scope/Technical Perf/EVMS Rvw. Surv	
scheduled		1/30/2009		B Harkins	S-102 Corrective Action Implementation Assessmnt	
scheduled		1/30/2009		B Harkins	Routine Surveillances (January)	

FY2009 - WRPS Integrated Assessment Schedule

Organization	ID No.	Due	Completed	Team Lead	Title	Changed during schedule Rev#:
				February 2009		
ENG						
Scheduled	FY2009-ENG-M-0109	2/28/2009		Eppler, L	Nuclear Criticality Safety (SMP)	Rev 0
ESHQ						
Scheduled	FY2009-ESHQ-S-0326	2/7/2009		Brown, B	835.401(a), Monitoring of Individuals & Areas, 835.405, Receipt of packages containing radioactive material (Triennial)	Rev 0
Scheduled	FY2009-ESHQ-S-0311	2/28/2009		Tuckness, D	OSHA Injury and Illness Recordkeeping	Rev 0
ORP						
scheduled		2/20/2009		B Harkins	242-A IVR Surveillance	
scheduled		2/27/2009		B Griffith	S-102 Corrective Actions Implemntn Assmnt	
scheduled		2/27/2009		B Harkins	Routine Surveillances (February)	
scheduled		2/27/2009		B Harkins	ConOps Program Surv.	
scheduled		2/27/2009		G Trenchard	Monthly Cost/Scope/Technical Perf/EVMS Rvw Surv.	
RET						
Scheduled	FY2009-RET-M-0117	2/28/2009		Baide, D	HIHTL Control and Storage	Rev 0

FY2009 - WRPS Integrated Assessment Schedule

Organization	ID No.	Due	Completed	Team Lead	Title	Changed during schedule Rev#:
				March 2009		
BASE OPS						
Scheduled	FY2009-OPS-M-0104	3/31/2009		Gregory, R	Work Authorization Utilizing Minor Work Tickets	Rev 0
Scheduled	FY2009-OPS-S-0301	3/30/2009		Nielsen, J	Waste Management	Rev 0
ENG						
Scheduled	FY2009-ENG-S-0303	3/31/2009		Knight, M	VSS Assessment Base Ops Ventilation Systems	Rev 0
ESHQ						
Scheduled	FY2009-WRPS-I-0002	3/31/2009		Maciuca, T	Training & Qualification	Rev 0
Scheduled	FY2009-ESHQ-M-0114	3/31/2009		McDonald, J	ISMS Phase 1	Rev 0
Scheduled	FY2009-ESHQ-S-0329	3/6/2009		Brown, B	835.209 Work Place Air Sampling (a) Concentrations of radioactive material in air and 835.403 Air monitoring (Triennial)	Rev 0
Scheduled	FY2009-ESHQ-S-0312	3/31/2009		Tuckness, D	Heat Stress	Rev 0
Rescheduled	FY2009-ESHQ-S-0322	3/31/2009		Tuckness, D	Cold Stress	Rev 1
ORP						
scheduled		3/2/2009		PR Hernandez	Integrated Safety Mgt. Surveillance	
scheduled		3/20/2009		T Hoertkorn	Emergency Mgnt. (DOE O 151.c) RL Assessment	
scheduled		3/20/2009		J Diediker	EVMS Surveillance	
scheduled		3/27/2009		G Trenchard	Transition Safety Oversight Plan Surveillance	
scheduled		3/31/2009		G Trenchard	Monthly Cost/Scope/Technical Perf/EVMS Rvw Surv.	
scheduled		3/31/2009		B Harkins	Effectiveness Review of EM-62 Actions Assessment	
scheduled		3/31/2009		B Harkins	Routine Surveillances (March)	
RET						
Scheduled	FY2009-RET-M-0118	3/31/2009		Adams, E	Conduct of Radiation Work Practices	Rev 0

FY2009 - WRPS Integrated Assessment Schedule

Organization	ID No.	Due	Completed	Team Lead	Title	Changed during schedule Rev#:
				April 2009		
BASE OPS						
Scheduled	FY2009-OPS-M-0105	4/30/2009		Gregory, R	Work Hazard Analysis	Rev 0
Scheduled	FY2009-OPS-S-0345	4/30/2009		Renberger, D	Annual Risk and Resource Identification (222-S)	Rev 0
ENG						
Scheduled	FY2009-ENG-M-0110	4/30/2009		Nelson, E	Configuration Management (SMP)	Rev 0
ESHQ						
Scheduled	FY2009-ESHQ-M-0123	4/30/2009		Shugars, D	Performance Assurance (Non-credited SMP)	Rev 0
Scheduled	FY2009-ESHQ-S-0330	4/28/2009		Brown, B	835.1102 Control of areas (a, b, d, e) (Triennial)	Rev 0
Scheduled	FY2009-ESHQ-S-0313	4/30/2009		Tuckness, D	Electrical Safety	Rev 0
ORP						
scheduled		4/15/2009		W Scott	Interface Control Assessment	
scheduled		4/17/2009		W Scott	Hazard and Control Documentation Assessment	
scheduled		4/24/2009		BL Williams	ATL Employee Concerns Program Surveillance	
scheduled		4/30/2009		G Trenchard	Monthly Cost/Scope/Technical Perf/EVMS Rvw Surv.	
scheduled		4/30/2009		B Harkins	Routine Surveillances (April)	
scheduled		4/30/2009		B Griffith	Nuclear Safety Hazard Analysis Assessment	
Project Integration						
Scheduled	FY2009-PI-M-0129	4/30/2009		McLellan, G	Project Management Program	Rev 0

FY2009 - WRPS Integrated Assessment Schedule

Organization	ID No.	Due	Completed	Team Lead	Title	Changed during schedule Rev#:
				May 2009		
BASE OPS						
Scheduled	FY2009-OPS-M-0106	5/31/2009		Hall / Seidel	IH Annual Program Management Review(222-S)	Rev 0
Scheduled	FY2009-OPS-M-0124	5/31/2009		Owen, P	Lockout / Tagout	Rev 0
Business Operations						
Scheduled	FY2009-BO-M-0111	5/31/2009		Lesko, A	Records Management	Rev 0
ENG						
Scheduled	FY2009-ENG-S-0302	5/31/2009		Eppler, L	Safety Management Program Implementation	Rev 0
ESHQ						
Scheduled	FY2009-WRPS-I-0003	5/31/2009		Maciuca, T	S-102 CAP Effectiveness	Rev 0
Scheduled	FY2009-ESHQ-M-0121	5/31/2009		Tuckness, D	Fire Protection (SMP)	Rev 0
Scheduled	FY2009-ESHQ-S-0331	5/28/2009		Brown, B	835.1101 Control of material and equipment (Release) (Triennial)	Rev 0
Scheduled	FY2009-ESHQ-S-0314	5/31/2009		Tuckness, D	Workers' Compensation	Rev 0
Scheduled	FY2009-ESHQ-S-0315	5/31/2009		Tuckness, D	IH Instrument Program	Rev 0
Scheduled	FY2009-ESHQ-S-0323	5/31/2009		McElroy, M	QA Audit of the Rad Air Emission Program	Rev 0
ORP						
scheduled		5/6/2009		PR Hernandez	Accident/injury Reporting (CAIRS) Surveillance	
scheduled		5/11/2009		DH Irby	IPS Engineering Implemention Assessment	
scheduled		5/15/2009		W Scott	222-S Upgrade Projects Assessment	
scheduled		5/22/2009		G Trenchard	TF Prog/Projects Division Self Assessment	
scheduled		5/22/2009		G Trenchard	Radioactive Waste Management Surveillance	
scheduled		5/29/2009		B Harkins	Independent Rvw. of Mgmt.Sys. Procdrs Assessment	
scheduled		5/29/2009		G Trenchard	Monthly Cost/Scope/Technical Perf/EVMS Rvw Surv.	
scheduled		5/29/2009		B Harkins	Routine Surveillances (May)	
Project Integration						
Scheduled	FY2009-PI-M-0130	5/30/2009		Basche, A	Assessment of Project Controls Software User/ Administrator Profiles and Access Rights	Rev 0
scheduled	FY2009-PI-S-0309	5/31/2009		Beaumier, G	Testing Program	

FY2009 - WRPS Integrated Assessment Schedule

Organization	ID No.	Due	Completed	Team Lead	Title	Changed during schedule Rev#:
				June 2009		
BASE OPS						
Scheduled	FY2009-OPS-M-0107	6/30/2009		Smith / Clark	Analytical QAPD Adequacy (222-S)	Rev 0
Added	FY2009-Ops-M-0137	6/30/2009		Owen, P	Corrective Action Effectiveness Evaluation for WRPS-PER-2008-0093	Rev 2
scheduled	FY2009-OPS-S-0324	6/30/2009		Hampton, C	DOE O 433.1A CRD Elements A-I	Rev 0
Scheduled	FY2009-OPS-S-0342	6/30/2009		Nielson, J	Chemical Management Program	Rev 0
ENG						
Scheduled	FY2009-ENG-M-0112	6/30/2009		Nelson, E	Human Factors (Non-credited SMP)	Rev 0
ESHQ						
Scheduled	FY2009-ESHQ-M-0125	6/30/2009		Rolph, J	Radiological Control (SMP)	Rev 0
Scheduled	FY2009-ESHQ-S-0316	6/30/2009		Tuckness, D	Lock Out / Tag Out Program	Rev 0
Scheduled	FY2009-ESHQ-S-0317	6/30/2009		Tuckness, D	Respiratory Protection	Rev 0
ORP						
scheduled		6/1/2009		PR Hernandez	WSHPP Surveillance WRPS	
scheduled		6/12/2009		T Hoertkorn	Emergency Mgnt. Surveillance (DOE O 151.C)	
scheduled		6/19/2009		BL Williams	WRPS Employee Concerns Surveillance	
scheduled		6/30/2009		G Trenchard	Monthly Cost/Scope/Technical Perf/EVMS Rvw Surv.	
scheduled		6/30/2009		B Harkins	Routine Surveillances (June)	
scheduled		6/30/2009		B Harkins	Phase 1 ISM Verification	
scheduled		6/30/2009		B Griffith	242-A Evaporator Multi-control Sys.&Var.Freq.Pmp	
scheduled		6/30/2009		PR Hernandez	Accident/injury Reporting (CAIRS) Surveillance	
scheduled		6/30/2009		T Hoertkorn	Lessons Learned/Operating Exp.(OEP) Assessment	
scheduled		6/30/2009		B Harkins	TOD Management Self Assessment	
Project Integration						
Scheduled	FY2009-PI-M-0126	6/1/2009		Ahmer, D	Estimating Process	Rev 0
Scheduled	FY2009-PI-M-0128	6/30/2009		Luchi, J	Risk Management Process Implementation	Rev 0
Scheduled	FY2009-PI-M-0135	6/30/2009		Blackmon, R	Validate Discrete Task, Performance Rules of Credit	Rev 0
RET						
Scheduled	FY2009-RET-M-0119	6/30/2009		Klos, J	Hazard Analysis, Identification and Control (Work Control)	Rev 0

FY2009 - WRPS Integrated Assessment Schedule

Changed during schedule Rev#:

Organization	ID No.	Due	Completed	Team Lead	Title	
June 2009						
WTP Support						
Added	FY2009-WTP-M-0136	6/30/2009		Rutland, P	System Planning Process	Rev 1

FY2009 - WRPS Integrated Assessment Schedule

Organization	ID No.	Due	Completed	Team Lead	Title	Changed during schedule Rev#:
				July 2009		
BASE OPS						
Scheduled	FY2009-OPS-M-0108	7/31/2009		Brey, K	Records Management (222-S)	Rev 0
Business Operations						
Scheduled	FY2009-BO-M-0131	7/31/2009		Robinson, J	Buyer Training	Rev 0
ESHQ						
Scheduled	FY2009-WRPS-I-0004	7/31/2009		Maciuca, T	Base Ops Management Systems	Rev 0
Scheduled	FY2009-ESHQ-S-0332	7/30/2009		Brown, B	835.101 Radiation protection programs (all); 835.102 Internal audits (all); 835.104 Written Procedures; 835.704 (c) Administrative records (Audits and reviews) (Triennial)	Rev 0
Scheduled	FY2009-ESHQ-S-0306	7/31/2009		McNeill, J	Safeguards and Security Program	Rev 0
Scheduled	FY2009-ESHQ-S-0318	7/31/2009		Tuckness, D	Flammable Gas Monitoring	Rev 0
Scheduled	FY2009-ESHQ-S-0319	7/31/2009		Tuckness, D	Hearing Conservation	Rev 0
ORP						
scheduled		7/17/2009		W Scott	Configuration Item ID and Maintenance Asmnt.	
scheduled		7/24/2009		PR Hernandez	ISMS Description Review Surveillance	
scheduled		7/31/2009		G Trenchard	Monthly Cost/Scope/Technical Perf/EVMS Rvw Surv.	
scheduled		7/31/2009		B Harkins	Routine Surveillances (July)	
scheduled		7/31/2009		PR Hernandez	WSHPP Surveillance	
scheduled		7/31/2009		L Nirider	TF Criticality Safety Program Surveillance	

FY2009 - WRPS Integrated Assessment Schedule

Changed during schedule Rev#:

August 2009

Organization	ID No.	Due	Completed	Team Lead	Title	Changed during schedule Rev#:
BASE OPS						
Scheduled	FY2009-OPS-S-0308	8/30/2009		Nielson, J	Transportation and Packaging Program / Operations	Rev 0
Scheduled	FY2009-OPS-S-0346	8/31/2009		Rahm, T	Procedures – Technical (Non-Credited SMP)	Rev 0
Business Operations						
Scheduled	FY2009-BO-M-0132	8/31/2009		Lesko, A	Document Control	Rev 0
Scheduled	FY2009-BO-M-0133	8/31/2009		Kitchen, B	Property System	Rev 0
ENG						
Scheduled	FY2009-ENG-M-0113	8/31/2009		Eppler, L	USQ Process	Rev 0
Scheduled	FY2009-ENG-M-0122	8/31/2009		Nelson, E	Effectiveness of the Conduct of Engineering improvement plan and revised Eng Pgm Mgt Plan	Rev 0
Scheduled	FY2009-ENG-S-0304	8/31/2009		Baide, D	VSS Assessment of R/C & Base Ops Back Flow Preventors & Isolation Valves for Double Valve Isolation	Rev 0
ESHQ						
Scheduled	FY2009-ESHQ-M-0115	8/31/2009		Anderson, C	PAAA Program Review	Rev 0
Scheduled	FY2009-ESHQ-S-0320	8/31/2009		Tuckness, D	Hoisting and Rigging	Rev 0
ORP						
scheduled		8/7/2009		W Scott	Waste Feed Support Project Assessment	
scheduled		8/14/2009		T Hoertkorn	Workplace Substance Abuse Surveillance	
scheduled		8/14/2009		T Hoertkorn	Emergency Mgnt. Surveillance (DOE O 151.C)	
scheduled		8/21/2009		T Hoertkorn	Workplace Substance Abuse Surveillance	
scheduled		8/28/2009		PR Hernandez	Integrated Safety Mgt. Surveillance	
scheduled		8/31/2009		A Hu	Tank Farm Specific Admin.Controls Assmnt.	
scheduled		8/31/2009		B Harkins	Routine Surveillances (August)	
scheduled		8/31/2009		G Trenchard	Monthly Cost/Scope/Technical Perf/EVMS Rvw Surv.	
Project Integration						
Scheduled	FY2009-PI-M-0101	8/31/2009		Rickenback, M	FY09 Project Review Board Evaluations (6)	Rev 0
Scheduled	FY2009-PI-M-0127	8/31/2009		Burt, D	Control Account Manager Rules of Credit Validation	Rev 0
Scheduled	FY2009-PI-S-0325	8/31/2009		Van Meighem, J	Interface Management	Rev 0

FY2009 - WRPS Integrated Assessment Schedule

Organization	ID No.	Due	Completed	Team Lead	Title	Changed during schedule Rev#:
				September 2009		
BASE OPS						
Scheduled	FY2009-OPS-S-0307	9/30/2009		Morales, T	Emergency Management Program	Rev 0
ESHQ						
Scheduled	FY2009-WRPS-I-0005	9/30/2009		Maciuca, T	Subcontract Management & Oversight	Rev 0
Scheduled	FY2009-ESHQ-M-0134	9/30/2009		McDonald, J	ISMS Phase 2	Rev 0
Scheduled	FY2009-ESHQ-S-0321	9/30/2009		Tuckness, D	Beryllium	Rev 0
Scheduled	FY2009-ESHQ-S-0333	9/30/2009		Brown, B	835.704 Administrative Records (Source Control) 835.1201 Sealed Radioactive Source Control (Triennial)	Rev 0
ORP						
scheduled		9/18/2009		C Kemp	Tank Waste Ret.Workplan field compliance surv.	
scheduled		9/30/2009		J Armstrong	Rad Con Assessment	
scheduled		9/30/2009		G Trenchard	Monthly Cost/Scope/Technical Perf/EVMS Rvw Surv.	
scheduled		9/30/2009		M Moreno/TBD	Industrial Hygiene Assessment	
scheduled		9/30/2009		M Moreno	Industrial Hygiene Assessment	
scheduled		9/30/2009		J Armstrong	Rad Con Assessment	
scheduled		9/30/2009		B Harkins	Routine Surveillances (September)	

Assessment Numbering Example:

FY2009-ENG-M-000X
Fiscal Year – Organization Code – Assessment Type – Numeric Identifier

Organization Code:

BO	Business Operations
WRPS	Used to identify Independent Assessments
RET	Retrieval & Closure Operations
ESHQ	Environmental Safety Health Quality
ENG	Engineering
GC	General Counsel
PI	Project Integration
OPS	Base Operations
WR	Workforce Resources

Assessment Type:

I = Independent Assessment
M = Management Assessment
ORP = DOE ORP external assessment
S = Specialty Assessments, assessments required by DOE Orders, law, industry standards or letter commitment.

If changes are made to the schedule, it will be annotated on the Revision Status page. Also, the far right portion of this report will indicate during which revision to the schedule the assessment was modified.

Save

Problem Evaluation Request (PER)

WRPS-PER-2008-0035
Closed 07/06/2009 10:15

PER No	Date of Discovery	Time of Discovery (24:00)	Project
WRPS-PER-2008-0035	10/08/2008	15:46	Maintenance

Location

All Tank Farms

How Was Problem Discovered

DNFSB

Description of Concern or Problem

The DNFSB indicated in recent correspondence to ORP that the performance indicators for maintenance could be improved.

Requirement Not Satisfied	Source Document Number
	DOE O 433.1A
Equipment Identification Number	**System Identification**

Immediate actions Taken or Planned

none required

Recommended Corrective actions

Develop new maintenance performance indicators

Originator Contact

I want to take the lead to develop the new PIs

Originators Name	Originators ID	Originators Phone	Date Initiated
Hampton, Cliff	H4255200	(509) 373-5205	10/08/2008

SHIFT OPERATIONS REVIEW

Title

DNFSB indicated that the performance indicators for maintenance could be improved.

How Discovered	Agency
Externally Identified	DNFSB

Reportability	SSC Operability	Operability Review	Comp Measures Req
Non-Reportable	N/A	N/A	

Describe actions Taken or Recommended

No additional actions taken or recommended by Base Ops SO

SO Reviewer Name	SO Reviewer ID	SO Reviewer Phone	SO Review Date
Johnson, Brian A	H0003531	(509) 373-2696	10/08/2008

SCREENING

PER Significance Level	
PIE/CIM	

Independent Assessment Review	Occurrence Report Number	Externally Identified	
No		Yes	
Assigned Responsible Manager	**Facilities Rep / SSO**	**Safety Management Rep**	
Tucker, Ron			

Program	Safety Management Program

PER Screening Comments

None.

Causal Code			
MGT/Comm/Train	**Human Performance**	**GEMS**	**Equip/Eng/Other**
Failed Barrier	**ORPS Code**	**Functional Area**	**Work Process**
	Not Applicable	Maintenance	• N/A
ISMS	**Consequence Code**		
Provide feedback and continuous improvement	• **N/A** - No consequence code applies		
PER Screening Chair	**PER Screening Chair ID**	**PER Screening Chair Phone**	**PER Screening Date**
Owen, Annette	H0054042	(509) 372-0533	10/09/2008

PAAA REVIEW

PAAA Screening	PAAA Codes	Function Codes	
Not subject to PAAA			
NTS Report Number	**NTS Report Date**		
Repetitive / Recurrent	**Programmatic**	**Intentional Violation / Misrepresentation**	
No	No	No	

PAAA Screening Comments

PAAA Reviewer Name	**PAAA Review Date**	
Anderson, Craig E	10/09/2008	
PAAA Approver Name	**PAAA Approve Date**	
Anderson, Craig E	10/10/2008	

SENIOR MANAGEMENT REVIEW/CONCURRENCE

TF Operations Morning Leadership Call

None. 10/10/08

Instructions for Responsible Manager

Evaluate suggestion, enter comments and required actions on PIE/CIM tab of the PER. Disposition in accordance with TFC-ESHQ-Q_C-C-01, Problem Evaluation Request.

Senior Management	Sr Mgmt ID	Sr Mgmt Phone	Sr Mgmt Review Date
Owen, Annette	H0054042	(509) 372-0533	10/10/2008

CAUSE ANALYSIS

Description of Occurrence

Extent of Condition

Safety Significance

Generic Implications

Remedial Corrective Action

Causal Analysis, Apparent Cause and/or Root Cause Analysis

CORRECTIVE ACTIONS

Actionee	Action Due Date	E-STARS Number
Hampton, Cliff	06/30/2009	WRPS-PER-2008-0035.1

Action

Review existing maintenance performance indicators and revise as necessary.

Corrective Action Attachments

- Link to PER
- RE_ WRPS-PER-2008-0252_1 and WRPS-PER-2008-0035.msg
- WRPS-0901067_R1_Enclosure_Native.doc

PIE/CIM

Evaluation of PIE/CIM Initiative

this PIE/CIM initiative will be adopted. Please see details of corrective action described below. WRPS-0901067_R1_Enclosure disusses the development of Performance Indicators for maintenance as an ongoing effort that is part of a larger maintenance initiative. The company level performance indicators have been clarrified to provide more accurate indication of the preventive mainteance and corrective maintenance backlog. Other Performance indicators used to evaluate targetted areas of performance (e.g. time between Field work complete and ops acceptance) are being developd and used internally to the BO - Maintenance and Work Execution. Internally used performance indicators will continue to be developed and discontinued as determined by the Maintenance and Work Execution Manager. Recommend this PER be closed

ATTACHMENTS

Link to PER

AUDIT HISTORY

Change Date	Auditor	Comments
10/10/2008 08:35	Owen, Annette	Responsible Manager Task Launched by Owen, Annette
12/05/2008 07:56	Glaman, Linda R	Corrective actions Launched by Glaman, Linda R
04/06/2009 11:06	Owen, Annette	Change to Cause Analysis screen/Corrective Action plan.
04/06/2009 11:07	Owen, Annette	Extend CA .1 to 6/30/09 per e-mail request. need to be extended because the maintenance program is being extensively upgraded and the upgrade process will update the performance indicators . Please extend until 6/30/09
07/01/2009 11:25	Hampton, Cliff	'Evaluation of PIE/CIM Initiative' was changed.

-- End of Report --
07/06/2009 10:16 AM

Task# WRPS-PER-2008-0035			
E-STARS[R] Report Task Detail Report 07/06/2009 1016			
TASK INFORMATION			
Task#	WRPS-PER-2008-0035		
Subject	PIE; DNFSB indicated that the performance indicators for maintenance could be improved.		
Parent Task#		Status	CLOSED 07/06/2009
Reference		Due	07/11/2009
Originator	^PER Coordinator	Priority	Medium
Originator Phone		Category	PER
Origination Date	10/08/2008 1552	Generic1	None
Remote Task#		Generic2	None
Deliverable	PER Review	Generic3	None
Class	None	View Permissions	Global
Instructions	*No Instructions*		
ROUTING LISTS			
1	Corrective actions Routing Lis		Inactive
	To launch Corrective actions.		
	• ^PER CAs(Owen, Annette) - Assign - Completed - 07/06/2009 1003 *Instructions:*		
2	Responsible Manager		Inactive
	Evaluate suggestion, enter comments and required actions on PIE/CIM tab of the PER. Disposition in accordance with TFC-ESHQ-Q_C-C-01, Problem Evaluation Request.		
	• Tucker, Ron - Assign - Completed with comments - 12/04/2008 0906 *Instructions:*		
	• Tucker, Ron - Assign - Completed with comments - 12/04/2008 0908 *Instructions:* Did you contact the originator about the PER? Document your contact in the response window.		
3	Review Initial PER		Inactive
	Review New PER		
	• ^SO(Johnson, Brian A) - Review - Concur - 10/08/2008 1605 *Instructions:*		

Task# WRPS-PER-2008-0035	
	• ^PER Screening(Owen, Annette) - Review - Concur - 10/09/2008 1459 *Instructions:*
	• ^Mgr Review(Owen, Annette) - Review - Concur - 10/10/2008 0835 *Instructions:*
ATTACHMENTS	
Attachments	1. Link to PER
COMMENTS	
Poster	Tucker, Ron (Ficklin, Jim) - 12/04/2008 0906
	Completed
	PIE/CIM evaluation complete; see updated PER for details and corrective action to be launched.
Poster	Tucker, Ron (Ficklin, Jim) - 12/04/2008 0908
	Completed
	The PER originator is unavailable until 12/8/09, but has been involved in discussions regarding resolution. He has been given the lead to develop the new PIs in accordance with his request via the subject PER.
Poster	^PER Coordinator (Owen, Annette) - 04/06/2009 1107
	Due Date Extension
	Extend CA .1 to 6/30/09 per e-mail request. need to be extended because the maintenance program is being extensively upgraded and the upgrade process will update the performance indicators . Please extend until 6/30/09
Poster	Hampton, Cliff - 07/01/2009 1127
	On going developement of Perfomance indicators
	this PIE/CIM initiative will be adopted. Please see details of corrective action described below. WRPS-0901067_R1_Enclosure disusses the development of Performance Indicators for maintenance as an ongoing effort that is part of a larger maintenance initiative. The company level performance indicators have been clarrified to provide more accurate indication of the preventive mainteance and corrective maintenance backlog. Other Performance indicators used to evaluate targetted areas of performance (e.g. time between Field work complete and ops acceptance) are being developd and used internally to the BO - Maintenance and Work Execution. Internally used performance indicators will continue to be developed and discontinued as determined by the Maintenance and Work Execution Manager. Recommend this PER be closed
Poster	^PER Coordinator (Owen, Annette) - 07/06/2009 1004
	CLOSED
	All Corrective Actions closed.
TASK DUE DATE HISTORY	

Task# WRPS-PER-2008-0035			
Modified	04/06/2009 1107 - ^PER Coordinator	New Due Date	07/11/2009 0000
Modified	12/05/2008 0756 - ^PER Coordinator	New Due Date	04/18/2009 0000
Modified	12/05/2008 0756 - ^PER Coordinator	New Due Date	04/14/2009 0000
Modified	10/10/2008 0835 - ^PER Coordinator	New Due Date	12/07/2008 1630
Modified	10/10/2008 0835 - ^PER Coordinator	New Due Date	12/07/2008 1630
Modified	10/08/2008 1552 - ^PER Coordinator	New Due Date	10/10/2008 1630
SUB TASK HISTORY			
Subtask#	WRPS-PER-2008-0035.1		
Subject	WRPS-PER-2008-0035; PIE; Review existing maintenance performance indicators and revise as necessary.		
Originator	^PER CAs		
	Routing List	*No Active Routing List*	
-- end of report --			

Task# WRPS-PER-2008-0035.1			
E-STARS[R] Report Task Detail Report 07/06/2009 1016			
TASK INFORMATION			
Task#	WRPS-PER-2008-0035.1		
Subject	WRPS-PER-2008-0035; PIE; Review existing maintenance performance indicators and revise as necessary.		
Parent Task#	WRPS-PER-2008-0035	Status	CLOSED 07/06/2009
Reference	WRPS-PER-2008-0035	Due	07/07/2009
Originator	^PER CAs	Priority	Medium
Originator Phone		Category	PER
Origination Date	12/05/2008 0756	Generic1	None
Remote Task#		Generic2	None
Deliverable	PER Review	Generic3	None
Class	None	View Permissions	Global
Instructions	*No Instructions*		
ROUTING LISTS			
1	Corrective Action		Inactive
	Review existing maintenance performance indicators and revise as necessary. RESPONSIBLE MANAGER: When this corrective action is complete, enter a closure statement in E-STARS and close the E-STARS subtask. Refer to the Problem Evaluation Request procedure TFC-ESHQ-Q-C-C-01, Section 4.4 for closure documentation requirements		
	• Hampton, Cliff - Assign - Completed with comments - 07/01/2009 1129 *Instructions:*		
	• Tucker, Ron - Review - Concur - 07/01/2009 1532 *Instructions:*		
ATTACHMENTS			
Attachments	1. Link to PER 2. RE_ WRPS-PER-2008-0252_1 and WRPS-PER-2008-0035.msg 3. WRPS-0901067_R1_Enclosure_Native.doc		
COMMENTS			
Poster	^PER Coordinator (Owen, Annette) - 04/06/2009 1107		
	Due Date Extension		

Task# WRPS-PER-2008-0035.1			
	Extend CA .1 to 6/30/09 per e-mail request. need to be extended because the maintenance program is being extensively upgraded and the upgrade process will update the performance indicators . Please extend until 6/30/09		
Poster	Hampton, Cliff - 07/01/2009 1129		
	Completed		
	Please see details of corrective action described below. WRPS-0901067_R1_Enclosure disusses the development of Performance Indicators for maintenance as an ongoing effort that is part of a larger maintenance initiative. The company level performance indicators have been clarrified to provide more accurate indication of the preventive mainteance and corrective maintenance backlog. Other Performance indicators used to evaluate targetted areas of performance (e.g. time between Field work complete and ops acceptance) are being developd and used internally to the BO - Maintenance and Work Execution. Internally used performance indicators will continue to be developed and discontinued as determined by the Maintenance and Work Execution Manager. Recommend this PER be closed		
Poster	^PER CAs (Owen, Annette) - 07/06/2009 1001		
	CLOSED		
	Closure statement is adequate to close this action.		
TASK DUE DATE HISTORY			
Modified	04/06/2009 1107 - ^PER Coordinator	New Due Date	06/30/2009 0000
Modified	12/05/2008 0756 - ^PER CAs	New Due Date	04/10/2009 0000
Modified	12/05/2008 0756 - ^PER CAs	New Due Date	04/14/2009 0000
SUB TASK HISTORY			
No Subtasks			
-- end of report --			

CORRECTIVE ACTION PLAN

Washington River Protection Solutions LLC
Maintenance and Work Control Improvement Plan

Response to U. S. Department of Energy (DOE), Office of River Protection (ORP) Transmittal of EM-62 and DNFSB Assessment of Maintenance and Work Control Activities at the Idaho Nuclear Technology and Engineering Center Cleanup Project

09-TOD-026/0901067
May 18, 2009

Developed by:
Washington River Protection Solutions LLC
June 16, 2009

Table of Contents

1.0 Introduction....3
2.0 Background....4
3.0 Summary of Assessment Activities....5
4.0 Assessment Results....10
4.1 Work Control....10
4.2 Master Equipment List/Safety Equipment List....11
4.3 Preventive Maintenance....12
4.4 Training....13
4.5 Spare Parts....14
4.6 Maintenance Program Improvement Initiatives....15
4.7 Miscellaneous Improvement Initiatives....16
5.0 Corrective Action Methodology....16
6.0 Review and Approval....17
7.0 Corrective Action Plan Closure....17

1.0 Introduction

On May 15, 2009, the U. S. Department of Energy (DOE), Office of River Protection (ORP) transmitted the results of reviews performed by DOE, Office of Operations Oversight, Environmental Management (EM-62), and the Defense Nuclear Facilities Safety Board (DNFSB) assessment of Maintenance and Work Control Activities at the Idaho Nuclear Technology and Engineering Center Cleanup Project. The EM-62 evaluation identified weaknesses in the preventative maintenance process implementation, Safety Management Program (SMP) Evaluation, and the System Engineering Program. The DNFSB identified issues with work planning and control processes and procedures that failed to provide the workforce with the necessary structured approach for ensuring worker safety.

The ORP requested Washington River Protection Solutions LLC (WRPS) to respond within 30 days of receipt with a plan to assess our programs for similar issues. In addition to submitting an assessment plan, the ORP requested the results of the assessment and associated Corrective Action Plan (CAP) be transmitted to ORP upon completion.

WRPS performed a review of current programs and processes to identify the presence or potential transportability of similar deficiencies to those identified at the Idaho Nuclear Technology and Engineering Center Cleanup Project. The following matrix provides a summary of the deficiencies identified by the DNFSB and EM-62, WRPS determination of similar or potential transportability of issues, and the reference discussion section of this report. Similar issues identified are discussed in detail in the Reference Section of this report and include actions taken and planned.

Table 1 - Deficiency Matrix		
DNFSB		
Deficiency	**Similar or Potential WRPS Deficiency (y/n)**	**Reference Section**
Incomplete Hazard Analyses	y	4.1
Complex and Confusing Work Planning Directives	y	4.1, 4.6
Errors in the Development of Work Packages for Routine but not necessarily simple or low-hazard tasks	y	4.1
Inappropriately modified hazard controls	y	4.1

Table 1 Continued - Deficiency Matrix		
EM-62		
Deficiency	**Similar or Potential WRPS Deficiency (y/n)**	**Reference Section**
Preventive Maintenance Work Order Process	y	4.3, 4.6
Model Work Order Development, Review, and Approval	y	4.1
Work Order Authorization, Release, Execution, and Close Out	y	4.1, 4.6
New Work Order Development	y	4.1
Exemption/Design Safety Analysis/Safety Equipment	y	4.2
Executive Safety Review Board/Safety Management Program Extent of Condition Review	Determination pending completion of Specialty Assessment FY2009-ENG-S-0302, *Safety Management Program Implementation,* results	

Since transition to the Tank Operations Contract on October 1, 2008, WRPS has completed several activities to evaluate and strengthen the implementation of the maintenance and work control processes. In addition to internal observations and assessments, WRPS has responded to externally identified surveillances and assessments. A summary of assessment activities is captured in Section 3.0. As a result of these assessments, WRPS has self-identified many opportunities for improvement within the implementation of the maintenance and work control processes as discussed in Section 4.0.

This plan provides an outline of completed assessment activities as well as a comprehensive Corrective Action Plan that addresses specific deficiencies and improvement initiatives identified throughout recent and on-going assessment activities. WRPS is committed to develop a robust maintenance and work control program through continuous improvement which is necessary to support the successful completion of future mission activities.

2.0 Background

The DOE/ORP conducted an assessment of the TOC Maintenance Program from December 8, 2008 to January 9, 2009 to assess the adequacy of the program. Several program issues were identified during the assessment and were similar to observations made by WRPS during and immediately after transition in October 2008. Although not specifically addressed by WRPS during transition, WRPS agreed with ORP that the Maintenance Implementation Plan (MIP) did not adequately define the maintenance program elements of DOE Order 433.1-1, *Maintenance Management Program Guide for DOE Nuclear Facilities.*

As part of contract transition, WRPS management performed detailed reviews of maintenance and field work that provided WRPS management assurance that work is being performed safely and in accordance with established requirements. WRPS management concluded that no immediate compensatory corrective actions were needed.

3.0 Summary of Assessment Activities

Table 2 below provides a listing of assessment activities occurring between October 1, 2008 through present relating to the maintenance and work control program or their attributes. Table 2 describes the activity, performer, and scope of the assessment. The listing of assessment activities includes self-imposed assessments performed by WRPS and externally performed assessments and WRPS response to externally identified assessments/surveillances. Sections 5.0 and 6.0 describe the corrective actions taken and/or planned in response to the identified deficiencies or opportunities for improvement.

Table 2 - Assessment Activities		
INTERNAL ASSESSMENT ACTIVITIES		
Assessment Activity	**Performed By**	**Scope of Review**
WRPS Due Diligence Review	WRPS	Research and analysis of operations and management and the verification of material facts done in preparation for transition.
WRPS Hazard Review Board (HRB)	WRPS	The purpose of the WRPS HRB was to provide independent technical work document reviews, mentoring, and feedback with the goal of improving the quality of work documents provided to the worker and aligning expectations for safe work across the organization.
Management Control Plan Closeout	WRPS	Performance of post-transition briefings through resumption of steady-state operations. Evaluation of lessons learned and development of Corrective Actions.
FY2009-OPS-S-0344, *Specialty Assessment Report – Fire Systems Maintenance Work Management Assessment*	WRPS	Evaluate management expectations for oversight and review of fire systems maintenance performed by the Hanford Fire Department. Evaluate potential weaknesses in the Fire Protection Program at Tank Farms and 222-S that were raised by the WRPS transition team.

IA09-02, *Internal Audit Report – Personal Property and Supply Management*	WRPS	The purpose of the audit was to evaluate WRPS Spare Parts program to assist management in assuring that the company's internal controls process is adequate and operating effectively, that company policies and procedures are being followed, and that potential issues are identified and corrected.
Voluntary Protection Program (VPP) Assessment	WRPS	A review of the five VPP tenets, including areas for improvement and strengths was performed to measure WRPS Base Operations organization implementation of VPP. A self-assessment utilizing the Hanford Site Voluntary Protection Program (VPP) self-assessment process which included interviewing Base Operations employees, observing field work activities, and reviewing program-related documents.
All Employee Brainstorming Sessions	WRPS	Activity resulted in identification of Work Control as a primary area for improvement. As a result, a multi-disciplined task team was initiated to improve the work control process to streamline planning time, improve hazard recognition and controls, consistency between projects, and more effective deployment of resources.
Integrated Safety Management System (ISMS) Phase 1 Internal Assessment	WRPS	This review is not only a review of the ISMS Description documentation, but is also a review of the procedures, policies, and manuals of practice used to implement safety management. The review evaluates how these procedures, policies, and manuals of practice have been implemented.

FY2009-OPS-M-0105, *Work Hazard Analysis*	WRPS	The purpose of the assessment was to determine the effectiveness of the WRPS Work Control procedure, including Job Hazard Analysis, at implementing the guidance for work planning. Additionally, demonstrate and provide evidence of implementation of the guidance documents for work planning. Specifically: 1. DOE G 433.1-1, *Maintenance Management Program Guide for DOE Nuclear Facilities* 2. NNSA -*Activity Level Work Planning and Control Processes*
FY2009-RET-M-0141, *S-102 Corrective Actions Implementation*	WRPS	Evaluate the overall sustained effectiveness of corrective actions in response to the July 2007 waste spill at S-102. Over 200 actions were addressed from a number of different review teams including a DOE-HQ Type A investigation. The driver for this management assessment was to provide Senior Management an additional review in light of some recent events.
FY2009-ENG-S-0302, *Safety Management Program (SMP) Implementation* (in-progress)	WRPS	The purpose of the assessment is to evaluate the implementation and effectiveness of the WRPS SMP program.
ISMS Phase 2 Internal Assessment (in-progress)	WRPS	A review to determine that the ISMS is satisfactorily implemented. The review is accomplished by sampling activities to determine that the safety management system outlined in the ISMS Description is in fact being effectively carried out.

Management Observation Program Results (continual process)	WRPS	Establish and maintain management presence in the field to improve WRPS performance by providing management oversight of work activities. Management observations assess the knowledge of workers and compliance with WRPS policies and procedures, identify and correct unsafe conditions/behaviors, and promote two-way communication between management and workers.
EXTERNAL ASSESSMENT ACTIVITIES		
Assessment Activity	**Performed By**	**Scope of Review**
A-09-AMENS-TANKFARM-001-F01, *Tank Operations Contractor (TOC) Maintenance Program*	DOE/ORP	The purpose of the assessment was to assess the adequacy and effectiveness of the TOC maintenance program relative to the requirements of DOE O 433.1.A, *Maintenance Management Program for DOE Nuclear Facilities.* The Order requires the contractor to develop and submit to DOE for approval a maintenance implementation plan (MIP) that defines the 11 important elements of an effective maintenance program. The assessment included the TOC maintenance, system engineers, project engineering, and training organizations.

09-TOD-030, *Final Report on the Effectiveness of Corrective Actions for the Type A Accident Investigation of the Hanford S-102 Tank Waste Spill – April 2009*	DOE/ORP	In accordance with the requirements of DOE 0 470.2B3, Independent Oversight and Performance Assurance Program, DOE 0 414.1C, Quality Assurance, and the approved CAP. The effectiveness review of the Type A corrective actions was conducted during the period April 14-24, 2009. The objective of the review was to evaluate the effectiveness of the corrective actions in addressing and correcting the underlying causes of the identified Judgment Of Needs and preventing their recurrence. The assessment team was comprised of 10 federal staff from the DOE Richland Operations Office, ORP, and the Idaho Operations Office, along with two Hanford Contractors.

4.0 Assessment Results

As previously stated WRPS recognizes weaknesses in the maintenance and work control processes and has identified similar issues to those identified at the Idaho Nuclear Technology and Engineering Center Cleanup Project. Since transition to the TOC in October 2008, WRPS has aggressively committed to assessing and analyzing areas for improvement as well as developing and implementing corrective actions necessary to achieve a robust maintenance and work control program. The maintenance and work control program will continue to be a focus area within WRPS for continuous improvement. The succeeding paragraphs identify improvement initiatives that resulted from the assessment activities performed in Section 3.0 that have a direct bearing on the health of the maintenance and work control program.

4.1 Work Control

The current work control process has been instrumental in the successful completion of high risk, complex, and routine work activities. Although WRPS has been successful in completing work activities following the current process; the current process lacks detail in certain areas and relies heavily on the knowledge and experience of the workforce. The current process is not conducive to the expected attrition rate and mission focus changes to support vitrification plant work. Therefore, it is the intent of WRPS to shift emphasis from an expert based process and move toward a stronger procedure based process.

During the recent companywide breakout process, WRPS employees specifically identified that work control/work execution improvements were needed to:

- Improve and streamline the work control process
- Improve hazard recognition and controls
- Improve consistency between projects
- More effective deployment of resources.

Additionally, the multiple other assessments listed in Table 2 have identified other areas of improvement associated with the work control process including the Work Hazard Analysis (WHA) process that can be strengthened to ensure proper Subject Matter Expert (SME) and worker involvement. A team led by the Technical Support Manager and Maintenance and Work Execution Manager has been assembled to complete this action. In addition to the items identified above the following will be addressed:

- Work Control Procedure Clarifications- WRPS revised TFC-OPS-MAINT-C-01, *Tank Operations Contractor Work Control*, to clarify the following requirements [Completed 5/22/09]:

    1. Use of Lessons Learned
    2. Clarification of when work packages are required to be presented to the Joint Review Group (JRG).

- Review and Approval Requirements - Definition of review and approval requirements for field work documents. The current process allows for broad interpretation from the field work supervisors to determine what is allowed on a minor work order and the level of involvement of SMEs. [WRPS-PER-2008-0250]

    1. Revise TFC-OPS-MAINT-C-01 to incorporate a requirement to ensure the responsible engineer approves all troubleshooting plans. [Complete 12/1/08]
    2. Revise TFC-OPS-MAINT-C-01 to include a requirement to obtain responsible engineer approval on all standard and complex work packages and on Technical Safety Requirement (TSR)/Environmental affecting Minor Work Orders. [Completed 5/22/09]
    3. Revise TFC-OPS-MAINT-C-01 to clarify guidance for SME involvement (ref. WRPS-PER-2008-0249). [ECD: 6/30/09]

- Post-Maintenance Testing – Evaluate the requirements of and the interface between Engineering, Maintenance, and Testing procedures related to post maintenance testing. [ECD: 7/17/09]

- Operational Acceptance – Improve the timeliness and sequence of performing Operations Acceptance of completed work. [ECD: 8/30/09]

- Hazard Analysis Process – Previous assessment activities indicate the tools used to perform Hazards Analysis are inconsistently applied. An evaluation of the Hazards Analysis process, including applicable procedures and training, should be performed. [ECD: 9/30/09]

    1. As a compensatory measure, Field Work Supervisors and Planners were briefed on the expectations and process for performing Work Hazards Analysis (WHA). Additionally, expectations regarding the WHA process and Work Release were reiterated to Shift Managers and Operations Engineers responsible for the release of work. [Complete]

4.2 Master Equipment List (MEL)/Safety Equipment List (SEL)

Questions posed during the ORP assessment broadened to the identification of problems with how the Master Equipment List (MEL) and Safety Equipment List (SEL) are defined and maintained. Consequently it has been determined that the following corrective actions or improvement initiatives will be taken:

- Safety Classification Validation- Validate the safety classification of components listed in Computerized History and Maintenance Planning Software (CHAMPS) against the SEL after issues with Commercial Grade Dedication (CGD) are resolved to the point that the validation would be appropriate (ref. WRPS-PER-2009-0628). [ECD: 7/31/09]

- Environmental Equipment Designations – Strengthen the process for establishing environmental equipment designation in the MEL.

    1. Establish consistency between RPP-16922, *Environmental Specification Requirements*, and the MEL. [ECD: 7/31/09]
    2. Evaluate and ensure flow down of environmental requirements into the MEL. [ECD: 7/31/09]

- Configuration Control - Establish configuration control of the CHAMPS/MEL database.

    1. Restrict/establish access for database input/change. [Complete]
    2. Develop and document a process for establishing and maintaining database control. [ECD: 7/31/09]

4.3 Preventive Maintenance

Several areas of improvement with the management of Preventive Maintenance (PM) have been identified through assessments and employee feedback. A meeting to discuss the issues and develop a course of action was chaired by the Maintenance and Work Execution Manager on April 8, 2009. The issues identified for improvement include:

- Work Management System – Priority codes, phase designators, and grace period application is inconsistently applied. The process should be strengthened to ensure appropriate identification and tracking (ref. WRPS-PER-2008-1413, WRPS-PER-2008-0253).

    1. Revise TFC-OPS-MAINT-C-01 to allow for disposition of PMs beyond grace period. [Completed 5/22/09]
    2. Complete disposition of PMs currently beyond grace period. [ECD: 6/30/09]
    3. Provide consistent definitions for fields used within the MEL and PM/S databases (e.g. grace period, priority, phase designator). [ECD: 7/31/09]

- Preventive Maintenance Administrative Procedures - There are multiple procedures/guidance documents concerning preventive maintenance but there is no cohesive procedure providing clear consistent direction and expectations. Develop an administrative procedure for managing the PM program addressing the following (ref. WRPS-PER-2008-1414, CH2M-PER-2008-1415). [ECD: 7/31/09]

    1. Due date methodology
    2. Philosophy concerning working to the due date
    3. Developing a technical basis for PM requirements
    4. Metrics defined
    5. Operations acceptance requirements
    6. Implementation process (may be addressed outside of the procedure).

- Completed PM Feedback – Perform an assessment to determine whether PM comments are being incorporated in procedures following performance. [ECD: 7/30/09]

- Fire Systems Maintenance – Fire System maintenance performed by the Hanford Fire Department is not always reviewed for acceptance by Tank Farm Operations (ref. WRPS-PER-2008-0443).

    1. Communicate and enforce the process to ensure WRPS performs Operations Acceptance of completed work orders performed by the Hanford Fire Department. [ECD: 6/30/09]
    2. Perform independent validation of Fire System Maintenance recall system to ensure accuracy and completeness. [ECD: 9/30/09]

4.4 Training

The training program for craft personnel assigned to Tank Farms was found to be deficient during TOC transition. Assessments conducted prior to the transition identified deficiencies concerning training of craft personnel were reviewed (WRPS-PER-2008-0201, PER-2008-1418, PER-2008-1419). The WRPS Training Department and maintenance organization recently completed a Training Needs Analysis for maintenance craft. Completed and planned corrective actions associated with improving training are as follows:

- Training Evaluation – A Training Needs Analysis was conducted. Recommendations from the Maintenance Training Needs Analysis were captured in the Maintenance Training Plan (TAC-09-001). [Complete]

- Training Implementation – A series of actions have been planned to implement the recently developed Maintenance Training Plan. Those actions include:

    1. Revise Individual Training Electronic Matrix (ITEM) Training Profiles for Electrician, Instrument Technicians, Millwrights, Pipefitters - Qualify designated craft as On-the-Job (OJT) instructors. [ECD: 6/12/09]
    2. Develop validation checklist to confirm Journeyman status for listed craft – this is a legacy issue that affects all Hanford contractors and is exacerbated by labor practices that allow movement from one contractor to another based solely on union seniority. [ECD: 7/31/09]
    3. Link qualification lists to specific procedures as identified in the Needs Analysis (requiring OJT) - Supervisors/Managers grandfather (as appropriate) those crafts deemed qualified to perform procedures. Currently the supervisors make this determination when assigning job tasks but there has been no formal process. WRPS management has directly observed field work and has concluded that this is a process improvement and not an immediate concern. [ECD: 8/31/09]
    4. Develop TOC – System, Structure, or Component (SSC) Orientation and conduct training. [ECD: 9/30/09]

5. Develop SSC Specific classes as per Needs Analysis and conduct training. [ECD: 9/30/09]
6. Revise the Maintenance Training Standard to reflect program changes. [ECD: 9/30/09]

4.5 Spare Parts

In response to Internal Audit Assessment IA09-02, *Personal Property and Supply*, and FY2008-OPS-M-0145, *Follow-up on Compliance Effectiveness of 2007 Spare Parts Program Management Assessment Corrective Actions*, several opportunities for improvement of the Spare Parts program were identified. WRPS established a series of actions involving process changes, metrics development, training, and inventory management. Upon completion of the improvement initiatives and monitoring of progress, WRPS will drive the necessary changes to ensure an improved, efficient, healthy Spare Parts program is attained. The series of planned/completed corrective actions include:

- Procedure Enhancements – A comprehensive review of procedures governing the Spare Parts program was performed to identify weaknesses. As a result, two procedures were cancelled, two new desktop instructions were developed, and one procedure was revised. Revision to the procedure set was accomplished with input from the Spare Parts Coordinator, Engineering, Bargaining Unit, Procurement, Procedures, and Quality Control personnel. The revised procedure set clarifies the Passport process for the end users and further defines what is considered a spare part therefore, establishing an effective process for performing and maintaining an accurate Spare Parts inventory. [Complete 3/19/09]

- Performance Indicators - A series of Performance Indicators were developed to provide management insight into program performance. [Complete]

- Training – Perform a series of briefings/training focused on establishing a process that will tie "Convenient Storage" into the Spare Parts system and train personnel to use the system properly. [ECD: 6/30/09]

- Inventory and Disposition - Inventory and disposition primary material storage areas 2750E/2101M/2101HV. [ECD: 12/30/09]

- Performance Monitoring - Conduct an Effectiveness Review of planned Spare Parts corrective actions upon completion. [ECD: 1/30/10]

4.6 Maintenance Program Improvement Initiatives

In addition to corrective actions planned or taken in the previous sections, additional opportunities for maintenance program improvements were identified. The following improvement initiatives were either completed or are in progress:

- Critical Resources Review – WRPS management completed a review of critical resource mix (i.e., health physics technicians (HPTs), Nuclear Chemical Operators (NCOs), etc.), availability of planners and engineers, and key staff alignment. [Completed 4/2/09]

- Maintenance Implementation Plan – WRPS revised the MIP to define the 11 required elements specified in DOE O 433.1A, *Maintenance Management Program for DOE Nuclear Facilities.* [Submitted for approval 4/29/09]

- Maintenance Program Description (MPD) - TFC-PLN-107, *WRPS Maintenance Program Description,* was issued to [Completed 4/29/09]:

  1. Demonstrate flow-down requirements from DOE maintenance guide.
  2. Consolidate and define the TOC maintenance program.

- Feedback and Continuous Improvement - Maintenance program enhancement meetings were held to review the maintenance program health and identify opportunities for improvement. No noncompliance deficiencies were identified. [Completed 4/30/09]

- Scheduling Improvements – Implement a work week window scheduling process to improve efficiency in the work planning, scheduling, and execution process. [on-going]

- Performance Monitoring and Feedback - Changing/adding performance indicators to aid in the identification and communication of trends and performance status. [on-going]

- Roles and Responsibilities - Evaluate the Base Operations organization to ensure roles and responsibilities are properly aligned and that efficiencies can be achieved (ref. WRPS-PER-2008-0254). [ECD: 9/30/09]

4.7 Miscellaneous Improvement Initiatives

In addition to the previously discussed planned or completed corrective actions, WRPS has self-identified other areas of improvement that, once completed, will have an indirect impact on the maintenance and work control programs. Implementation of the following

actions will influence continuous improvement throughout various WRPS programs/processes. Those actions are summarized below:

- Plant Review Committee – WRPS established a Plant Review Committee to strengthen the Potential Inadequacy in Safety Analysis (PISA) and Unreviewed Safety Question (USQ) determination and approval processes. [Completed 3/12/09]

- Engineering Improvement Plan – An Engineering Improvement Plan was developed. Areas of evaluation included depth and breadth of knowledge of key equipment, drawing quality, and the commercial grade item (CGI) process. [Completed 4/24/09]

- Procedure Improvements - Evaluate the WRPS procedures processes in the administrative and technical areas, with the primary focus being Hazard Review Board-identified areas of improvement. Develop a Procedures Improvement Plan to address areas of concern or opportunities for improvement. [ECD: 9/30/09]

- Commercial Grade Item (CGI) Dedication - Issues with the CGI process and implementation had been identified. Efforts are in-progress to revise the WRPS CGI procedures and provide training to Quality Assurance and Engineering personnel that perform CGI activities. [ECD: 9/30/09]

- Configuration Management - A WRPS Management Assessment of configuration management is in progress. [ECD: 6/30/09]

The completed and planned corrective actions mentioned in section 4.0 are designed to implement improvements in the maintenance and work control programs. Additionally, WRPS will continue to monitor program health to ensure a satisfactory level of performance is achieved and sustained through the continuous monitoring and reporting of program improvement areas.

5.0 Corrective Action Methodology

WRPS management's mission and approach to the conduct of operations demands a more robust maintenance and work control program to ensure all areas of DOE O 433.1A are effectively implemented through procedures and programs. WRPS continually performs assessments and evaluations to identify areas of improvements.

6.0 Review and Approval

Results of this analysis and planned Corrective Actions were reviewed and concurred with by affected organizations as well as by the WRPS Project Operations Manager. Additionally, the approach to the corrective actions plan has been communicated with ORP.

7.0 Corrective Action Plan Closure

The planned Corrective Actions outlined in this report have been documented in Problem Evaluation Request (PER) WRPS-PER-2009-1154 and will be tracked to completion via the Electronic Suspense Tracking and Routing System (ESTAR), the WRPS issues management system. WRPS management will periodically review the status of the planned actions to ensure completion. The projected due dates are subject to change and may be accelerated or postponed based on the needs of the organization. Electronic closure evidence will be attached to the ESTAR task upon completion to ensure retrievability and accessibility.

Message

From: Tucker, Ronald P
Sent: Monday, April 06, 2009 10:58 AM
To: Hampton, Clifford E; Owen, Annette
Subject: RE: WRPS-PER-2008-0252.1 and WRPS-PER-2008-0035

I concur with extending these actions.

Ron

From: Hampton, Clifford E
Sent: Monday, April 06, 2009 9:49 AM
To: Tucker, Ronald P
Subject: FW: WRPS-PER-2008-0252.1 and WRPS-PER-2008-0035

From: ^WRPS Corrective Action Group
Sent: Friday, March 27, 2009 1:50 PM
To: Hampton, Clifford E; ^WRPS Corrective Action Group
Subject: RE: WRPS-PER-2008-0252.1 and WRPS-PER-2008-0035

Cliff,
I need concurrence from the PER owners in order to extend these PERs.

Annette

From: Hampton, Clifford E
Sent: Friday, March 27, 2009 10:26 AM
To: ^WRPS Corrective Action Group
Subject: WRPS-PER-2008-0252.1 and WRPS-PER-2008-0035

These actions need to be extended because the maintenance program is being extensively upgraded and the upgrade process will update the performance indicators . Please extend until 6/30/09

Save

Problem Evaluation Request (PER)

WRPS-PER-2008-0036
Closed 04/13/2009 13:30

PER No	Date of Discovery	Time of Discovery (24:00)	Project
WRPS-PER-2008-0036	10/01/2008	15:00	Eng-BO

Location

AN Farm

How Was Problem Discovered

Field Observation

Description of Concern or Problem

Berm for the cross site transfer line running on the north side of 241-AN was excavated for a trench for installation of the hose in hose transfer line to support C-farm retrievals. Most of the excavation was back filled prior to the suspension of the construction work. But there are several location s that were left open. This may pose potential cold weather freezing problem for the underlying cross site transfer line.

Requirement Not Satisfied	Source Document Number

Equipment Identification Number	System Identification
	Waste Transfer

Immediate actions Taken or Planned

Generated this PER

Recommended Corrective actions

Engineering evaluate the condition and recommmend corrective actions.

Originator Contact

I would like to review the the corrective actions at closure to ensure they were effective

Originators Name	Originators ID	Originators Phone	Date Initiated
Brooks, Rocky L	H0095655	(509) 373-9424	10/08/2008

SHIFT OPERATIONS REVIEW

Title

Potential cold weather freezing problem for the underlying cross site transfer line.

How Discovered	Agency
self-ID prior to event	

Reportability	SSC Operability	Operability Review	Comp Measures Req
Non-Reportable	N/A	N/A	

Describe actions Taken or Recommended

Forward PER to Facility Manager for resolution. No additional actions taken or recommended by Base Ops SO

SO Reviewer Name	SO Reviewer ID	SO Reviewer Phone	SO Review Date
Johnson, Brian A	H0003531	(509) 373-2696	10/09/2008

SCREENING

PER Significance Level			
TUF			
Independent Assessment Review	**Occurrence Report Number**	**Externally Identified**	
No		No	
Assigned Responsible Manager	**Facilities Rep / SSO**	**Safety Management Rep**	
Brooks, Rocky L			

Program	Safety Management Program
• **N/A**	• **N/A**

PER Screening Comments

Determine if there is a cold weather issue and if so, make recommendations. Linda Glaman

RESCREEN REQUEST (F/E) Domnoske-Rauch, Lisa A 10/22/2008 1710

An engineering review of the line indicates that the water can not fill the entire cross section of the pipe therefore the damage from freezing is most likely not a concern. In addition, the jumper that was connected to the cross site line in the AN-01A pit had been removed and water drained from the line. Therefore the line would not be full.

An Evaluation of how much cover is over the line and how close the the excavations are to the low point near the lift station may be warranted. If the excavations aren't near a portion of the line that is may have water in it and/or the line has some cover then doing nothing could be acceptable. The most sensible solution is to fill the trench.

Recommend that this PER be assigned to the Facility Manager as a TUF and recommend that the trench is filled.

RE-SCREEN COMMENTS: Change to TUF and assigned to AN Farm Facility Manager (Rocky Brooks). (Nancy Brown 10/24/08)

Causal Code

MGT/Comm/Train	**Human Performance**	**GEMS**	**Equip/Eng/Other**
Failed Barrier	**ORPS Code**	**Functional Area**	**Work Process**
	Not Applicable	Operations	• Excavation, Trenching and Shoring
ISMS	**Consequence Code**		
Develop and implement hazard controls	• **N/A** - No consequence code applies		
PER Screening Chair	**PER Screening Chair ID**	**PER Screening Chair Phone**	**PER Screening Date**
Owen, Annette	H0054042	(509) 372-0533	10/09/2008

PAAA REVIEW

PAAA Screening	**PAAA Codes**	**Function Codes**	
PAAA, Non-NTS Reportable	• 10 CFR 830.122 (e)(1) • 10 CFR 830.122 (e)(3)	• Excavation • Maintenance	
NTS Report Number	**NTS Report Date**		
Repetitive / Recurrent	**Programmatic**	**Intentional Violation / Misrepresentation**	
No	No	No	

PAAA Screening Comments

PAAA Reviewer Name	**PAAA Review Date**	
Anderson, Craig E	10/09/2008	
PAAA Approver Name	**PAAA Approve Date**	
Anderson, Craig E	10/10/2008	

SENIOR MANAGEMENT REVIEW/CONCURRENCE

TF Operations Morning Leadership Call

None. 10/10/08

None. 10/27/08

Instructions for Responsible Manager

Review the PER and determine action required. Complete action and enter statement on TUF tab. 'Complete' the task in E-STARS and 'Close' in accordance with TFC-ESHQ-Q_C-C-01, Problem Evaluation Request.

Senior Management	Sr Mgmt ID	Sr Mgmt Phone	Sr Mgmt Review Date
Owen, Annette	H0054042	(509) 372-0533	10/27/2008

Track Until Fixed (TUF)

Action Taken

An engineering review of the line indicates that the water cannot fill the entire cross section of the pipe therefore the damage from freezing is most likely not a concern. In addition, the jumper that was connected to the cross site line in the AN-01A pit had been removed and water drained from the line. Therefore the line would not be full. An Evaluation of how much cover is over the line and how close the excavations are to the low point near the lift station may be warranted. If the excavations aren't near a portion of the line that is may have water in it and/or the line has some cover then doing nothing could be acceptable. The most sensible solution is to fill the trench. Recommend that this PER be assigned to the Facility Manager as a TUF and recommend that the trench is filled.

The above information states that freezing of the cross site line is not an issue which is the subject of this PER. Therefore not further action is required. Construction will backfill the trench when their work is complete.

ATTACHMENTS

Link to PER

AUDIT HISTORY

Change Date	Auditor	Comments
10/09/2008 15:00	Owen, Annette	'Program/Project' was changed.
10/10/2008 08:36	Owen, Annette	Responsible Manager Task Launched by Owen, Annette
10/23/2008 09:14	Owen, Annette	'PER Screening Comments' was changed.
10/24/2008 13:30	Brown, Nancy L	'PER Significance Level' was changed from Further Evaluation to TUF. 'Assigned Responsible Manager' was changed. 'PER Screening Comments' was changed.
10/27/2008 09:57	Owen, Annette	'TF Operations Morning Leadership Call' was changed. 'Instructions for Responsible Manager' was changed.

-- End of Report --
04/13/2009 01:45 PM

Task# WRPS-PER-2008-0036			
E-STARS[R] Report Task Detail Report 04/13/2009 0145			
TASK INFORMATION			
Task#	WRPS-PER-2008-0036		
Subject	TUF; Potential cold weather freezing problem for the underlying cross site transfer line.		
Parent Task#		Status	CLOSED 04/13/2009
Reference		Due	02/24/2009
Originator	^PER Coordinator	Priority	Medium
Originator Phone		Category	PER
Origination Date	10/08/2008 1754	Generic1	None
Remote Task#		Generic2	None
Deliverable	PER Review	Generic3	None
Class	None	View Permissions	Global
Instructions	*No Instructions*		
ROUTING LISTS			
1	Responsible Manager		Inactive
	Review the PER and determine action required. Complete action and enter statement on TUF tab. 'Complete' the task in E-STARS and 'Close' in accordance with TFC-ESHQ-Q_C-C-01, Problem Evaluation Request.		
	• Domnoske-Rauch, Lisa A - Assign - Completed with comments - 10/22/2008 1712 *Instructions:*		
	• Domnoske-Rauch, Lisa A - Assign - Completed with comments - 10/22/2008 1713 *Instructions:* Did you contact the originator about the PER? Document your contact in the response window.		
	• ^Mgr Review - Review - Withdrawn - 10/23/2008 1458 *Instructions:*		
	• ^PER Screening - Assign - Withdrawn - 10/23/2008 1458 *Instructions:*		
	• ^PER Screening(Brown, Nancy L) - Assign - Completed - 10/24/2008 1330 *Instructions:*		
	• ^Mgr Review(Owen, Annette) - Review - Concur - 10/27/2008 0957 *Instructions:*		
	• Brooks, Rocky L - Assign - Completed - 04/13/2009 1318 *Instructions:*		

Task# WRPS-PER-2008-0036		
	• Brooks, Rocky L - Close - Closed - 04/13/2009 1319 *Instructions:*	
2	Review Initial PER	Inactive
	Review New PER	
	• ^SO(Johnson, Brian A) - Review - Concur - 10/09/2008 0536 *Instructions:*	
	• ^PER Screening(Owen, Annette) - Review - Concur - 10/09/2008 1505 *Instructions:*	
	• ^Mgr Review(Owen, Annette) - Review - Concur - 10/10/2008 0836 *Instructions:*	
ATTACHMENTS		
Attachments	1. Link to PER	
COMMENTS		
Poster	Domnoske-Rauch, Lisa A - 10/22/2008 0510	
	An engineering review of the line indicates that the water can not fill the entire cross section of the pipe therefore the damage from freezing is most likely not a concern. In addition, the jumper that was connected to the cross site line in the AN-01A pit had been removed and water drained from the line. Therefore the line would not be full. An Evaluation of how much cover is over the line and how close the the excavations are to the low point near the lift station may be warranted. If the excavations aren't near a portion of the line that is may have water in it and/or the line has some cover then doing nothing could be acceptable. The most sensible solution is to fill the trench. Recommend that this PER be assigned to the Facility Manager as a TUF and recommend that the trench is filled.	
Poster	Domnoske-Rauch, Lisa A - 10/22/2008 0510	
	Completed	
	FUR recommendation completed recommend assign to Facility Manager as a TUF and the Trench filled.	
Poster	Domnoske-Rauch, Lisa A - 10/22/2008 0510	
	Completed	
	FUR completed.	
Poster	Brooks, Rocky L (Judkins, Heather K) - 04/13/2009 0104	
	Feeback	
	From: Brooks, Rocky L Sent: Monday, April 13, 2009 10:46 AM To: Skaggs, Kristi A; Judkins, Heather	

Task# WRPS-PER-2008-0036			
	Subject: WRPS-PER-2008-0036 Closure Information.doc		
TASK DUE DATE HISTORY			
Modified	10/27/2008 1006 - ^PER Coordinator (Owen, Annette)	New Due Date	02/24/2009 1630
Modified	10/10/2008 0836 - ^PER Coordinator	New Due Date	10/17/2008 1630
Modified	10/10/2008 0836 - ^PER Coordinator	New Due Date	10/17/2008 1630
Modified	10/08/2008 1754 - ^PER Coordinator	New Due Date	10/10/2008 1630
SUB TASK HISTORY			
No Subtasks			
-- end of report --			

Save

Problem Evaluation Request (PER)

WRPS-PER-2008-0063
Closed 12/01/2008 16:00

PER No	Date of Discovery	Time of Discovery (24:00)	Project
WRPS-PER-2008-0063	10/07/2008	08:00	Radcon-BO

Location

All Tank Farms

How Was Problem Discovered

PER Trend Analysis

Description of Concern or Problem

As identified in the PER Screening comments for WRPS-PER-2008-0001 (see attached link), air samplers are routinely checked out of the tool crib without being returned in a timely manner. I could not find any formal procedural requirements regarding checking in air samplers after a specified amount of time. Given the high volume of air sampler OOTs that have been reported for the past year, the RadCon program should consider improving the check-in/check-out process for the air samplers. Air samplers should be tracked to ensure that they are turned in immediately following a job. Leaving air samplers in the field or storing them in offices, trucks, or other non-ideal locations is likely to increase the likelihood of damage to the air sampler.

Requirement Not Satisfied	Source Document Number

Equipment Identification Number	System Identification

Immediate actions Taken or Planned

Discussed with Fixed/Portable Instrumentation Company Technical Authority and Maintenance.

Recommended Corrective actions

Assign this PER as a PIE/CIM to Base Ops RadCon (Brad Brannan) to evaluate options for improving the tracking of air samplers and ensuring their return to the tool crib or another appropriate storage location. Copy Jim Rolph and Ed Adams on this PER as well.

Originator Contact

No

Originators Name	Originators ID	Originators Phone	Date Initiated
Hanni, Jon	H2391068	(509) 373-4017	10/13/2008

SHIFT OPERATIONS REVIEW

Title

Tracking of Rad Con Air Samplers

How Discovered	Agency
self-ID prior to event	

Reportability	SSC Operability	Operability Review	Comp Measures Req
Non-Reportable	N/A	N/A	

Describe actions Taken or Recommended

No additional actions taken or recommended by the BOSO.

SO Reviewer Name	SO Reviewer ID	SO Reviewer Phone	SO Review Date
Higham, Dale B	H0078950	(509) 373-2689	10/13/2008

SCREENING

PER Significance Level	
PIE/CIM	

Independent Assessment Review	Occurrence Report Number	Externally Identified	
No		No	

Assigned Responsible Manager	Facilities Rep / SSO	Safety Management Rep	

Brannan, Patrick (Brad)			
Program		**Safety Management Program**	
PER Screening Comments			
PER originator requests cc: Jim Rolph, Ed Adams (Nancy Brown 10-14-08)			
Causal Code			
MGT/Comm/Train	**Human Performance**	**GEMS**	**Equip/Eng/Other**
Failed Barrier	**ORPS Code**	**Functional Area**	**Work Process**
	Not Applicable	Radiation Protection	• Radiological Instrumentation
ISMS	**Consequence Code**		
Provide feedback and continuous improvement	• **N/A** - No consequence code applies		
PER Screening Chair	**PER Screening Chair ID**	**PER Screening Chair Phone**	**PER Screening Date**
Brown, Nancy L	H0088797	(509) 373-0992	10/14/2008
PAAA REVIEW			
PAAA Screening	**PAAA Codes**	**Function Codes**	
Not subject to PAAA			
NTS Report Number	**NTS Report Date**		
Repetitive / Recurrent	**Programmatic**	**Intentional Violation / Misrepresentation**	
No	No	No	
PAAA Screening Comments			
PAAA Reviewer Name	**PAAA Review Date**		
Anderson, Craig E	10/14/2008		
PAAA Approver Name	**PAAA Approve Date**		
Anderson, Craig E	10/15/2008		
SENIOR MANAGEMENT REVIEW/CONCURRENCE			
TF Operations Morning Leadership Call			
None. 10/15/08			
Instructions for Responsible Manager			
Evaluate suggestion, enter comments and required actions on PIE/CIM tab of the PER. Disposition in accordance with TFC-ESHQ-Q_C-C-01, Problem Evaluation Request.			
Senior Management	**Sr Mgmt ID**	**Sr Mgmt Phone**	**Sr Mgmt Review Date**
Owen, Annette	H0054042	(509) 372-0533	10/15/2008
CAUSE ANALYSIS			
Description of Occurrence			
Extent of Condition			
Safety Significance			
Generic Implications			

Remedial Corrective Action

Causal Analysis, Apparent Cause and/or Root Cause Analysis

PIE/CIM

Evaluation of PIE/CIM Initiative

This evaluation consisted of interviews with Base Ops RadCon management and personnel familiar with air sampler storage and use.

As identified in this PER, air samplers are routinely checked out of storage locations and not returned in a "timely" manner. It was speculated by the PER originator that the long periods outside of the tool room environment, could contribute to air sampler out of tolerance conditions at calibration or that storing them in offices, trucks, or other non-ideal locations may increase the likelihood of damage.

The information gathered from interviews indicates that both Base Ops East and West RadCon uses the tool room for storage and issue of air samplers. Base Ops Sampling controls its own air sampler issue. Review of air sampler issue logs indicates that while some air samplers are issued for extended periods, adequate numbers of air samplers exist to meet needs; RadCon personnel did not report being unable to locate in-service air samplers when needed. Also, it was reported that air samplers that are issued to the field are typically located in sheltered areas pending use and not subject to physical abuse or stress. The movement of air samplers unsecured in vehicles has been previously identified as a source of damage and has been addressed by another PER.

This evaluation found no basis for the previous speculation that air samplers were damaged as the result of extended field use periods and that Base Ops air samplers (other than Sampling) are currently stored and issued from a designated control room. Therefore, no further action is recommended. This PER should be closed.

Above response provided by EE Bickel for PB Brannan.

ATTACHMENTS

Link to WRPS-PER-2008-0001

Link to PER

AUDIT HISTORY

Change Date	Auditor	Comments
10/15/2008 08:07	Owen, Annette	Responsible Manager Task Launched by Owen, Annette

-- End of Report --
12/01/2008 10:15 PM

Task# WRPS-PER-2008-0063			
E-STARS[R] Report Task Detail Report 12/01/2008 1015			
TASK INFORMATION			
Task#	WRPS-PER-2008-0063		
Subject	PIE; Tracking of Rad Con Air Samplers		
Parent Task#		Status	CLOSED 12/01/2008
Reference		Due	12/12/2008
Originator	^PER Coordinator	Priority	Medium
Originator Phone		Category	PER
Origination Date	10/13/2008 1556	Generic1	None
Remote Task#		Generic2	None
Deliverable	PER Review	Generic3	None
Class	None	View Permissions	Global
Instructions	*No Instructions*		
ROUTING LISTS			
1	Responsible Manager		Inactive
	Evaluate suggestion, enter comments and required actions on PIE/CIM tab of the PER. Disposition in accordance with TFC-ESHQ-Q_C-C-01, Problem Evaluation Request.		
	• Brannan, Patrick (Brad) - Assign - Completed with comments - 11/25/2008 1149 *Instructions:*		
2	Review Initial PER		Inactive
	Review New PER		
	• ^SO(Higham, Dale B) - Review - Concur - 10/13/2008 1720 *Instructions:*		
	• ^PER Screening(Brown, Nancy L) - Review - Concur - 10/14/2008 1501 *Instructions:*		
	• ^Mgr Review(Owen, Annette) - Review - Concur - 10/15/2008 0806 *Instructions:*		
ATTACHMENTS			
Attachments	1. Link to WRPS-PER-2008-0001 2. Link to PER		
COLLABORATION			

Task# WRPS-PER-2008-0063			
COMMENTS			
Poster	Brannan, Patrick (Brad) (Bickel, Eric E) - 11/25/2008 1111		
	Completed		
	This evaluation consisted of interviews with Base Ops RadCon management and personnel familiar with air sampler storage and use. This evaluation found no basis for the previous speculation that air samplers were damaged as the result of extended field use periods and that Base Ops air samplers (other than Sampling) are currently stored and issued from a designated control room. Therefore, no further action is recommended. This PER should be closed. Above response provided by EE Bickel for PB Brannan.		
Poster	^PER Coordinator (Glaman, Linda R) - 12/01/2008 0312		
	CLOSED		
	PER complete. L Glaman		
TASK DUE DATE HISTORY			
Modified	10/15/2008 0807 - ^PER Coordinator	New Due Date	12/12/2008 1630
Modified	10/15/2008 0806 - ^PER Coordinator	New Due Date	12/12/2008 1630
Modified	10/13/2008 1556 - ^PER Coordinator	New Due Date	10/15/2008 1630
SUB TASK HISTORY			
No Subtasks			
-- end of report --			

Save

Problem Evaluation Request (PER)

WRPS-PER-2008-0074
Closed 10/20/2008 11:00

PER No	Date of Discovery	Time of Discovery (24:00)	Project
WRPS-PER-2008-0074	10/14/2008	14:00	Eng-BO

Location

A Farm

How Was Problem Discovered

Maintenance Activity

Description of Concern or Problem

On 10/14/2008, the 241-A-105, G-1 breather filter failed annual aerosol testing under work document WFO-WO-08-1351. The filter normalized differential pressure was 2.73" w.g. which is greater than the maximum allowable pressure of 1.6" w.g.

Requirement Not Satisfied	Source Document Number
Annual Aerosol Testing	RPP-16922, Environmental Specifications Requirements
Equipment Identification Number	**System Identification**
A105-WST-FLT-101	Ventilation Tank Primary

Immediate actions Taken or Planned

FWS reported failure and work document TFC-WO-08-1911 was generated to replace the failed filter.

Recommended Corrective actions

Replace 241-A-105 within the time frame note in RPP-16922 and then using work document TFC-WO-08-1913 perform aerosol testing.

Recommend PER sig level of Trend Only

Originator Contact

No

Originators Name	Originators ID	Originators Phone	Date Initiated
Gauck, Gregory J	H0031592	(509) 373-1779	10/15/2008

SHIFT OPERATIONS REVIEW

Title

A-105 Breather Filter failed Aerosol test

How Discovered	Agency
self-ID result of event	

Reportability	SSC Operability	Operability Review	Comp Measures Req
Non-Reportable	N/A	N/A	

Describe actions Taken or Recommended

15 days to replace breather filter. No additional actions taken or recommended by Base Ops SO

SO Reviewer Name	SO Reviewer ID	SO Reviewer Phone	SO Review Date
Strasser, David W	H0075556	(509) 373-2689	10/15/2008

SCREENING

PER Significance Level			
Trend Only			
Independent Assessment Review	**Occurrence Report Number**	**Externally Identified**	
No		No	
Assigned Responsible Manager	**Facilities Rep / SSO**	**Safety Management Rep**	
Woehle, Christopher P			
Program		**Safety Management Program**	

• **N/A**		• **N/A**	
PER Screening Comments			
No comments (Nancy Brown 10/16/08)			
Causal Code			
MGT/Comm/Train	**Human Performance**	**GEMS**	**Equip/Eng/Other**
Failed Barrier	**ORPS Code**	**Functional Area**	**Work Process**
	Not Applicable	Maintenance	• Maintenance: Corrective
ISMS	**Consequence Code**		
Perform work within the controls	• **N/A** - No consequence code applies		
PER Screening Chair	**PER Screening Chair ID**	**PER Screening Chair Phone**	**PER Screening Date**
Brown, Nancy L	H0088797	(509) 373-0992	10/16/2008
PAAA REVIEW			
PAAA Screening	**PAAA Codes**	**Function Codes**	
Not subject to PAAA			
NTS Report Number	**NTS Report Date**		
Repetitive / Recurrent	**Programmatic**	**Intentional Violation / Misrepresentation**	
No	No	No	
PAAA Screening Comments			
PAAA Reviewer Name	**PAAA Review Date**		
Anderson, Craig E	10/16/2008		
PAAA Approver Name	**PAAA Approve Date**		
Quintana, Michael S	10/20/2008		
SENIOR MANAGEMENT REVIEW/CONCURRENCE			
TF Operations Morning Leadership Call			
None. 10/20/08			
Instructions for Responsible Manager			
Senior Management	**Sr Mgmt ID**	**Sr Mgmt Phone**	**Sr Mgmt Review Date**
Owen, Annette	H0054042	(509) 372-0533	10/20/2008
ATTACHMENTS			
Link to PER			

-- End of Report --
10/20/2008 11:15 AM

Task# WRPS-PER-2008-0074			
E-STARS[R] Report Task Detail Report 10/20/2008 1115			
TASK INFORMATION			
Task#	WRPS-PER-2008-0074		
Subject	Trend; A-105 Breather Filter failed Aerosol test		
Parent Task#		Status	CLOSED 10/20/2008
Reference		Due	10/17/2008
Originator	^PER Coordinator	Priority	Medium
Originator Phone		Category	PER
Origination Date	10/15/2008 0858	Generic1	None
Remote Task#		Generic2	None
Deliverable	PER Review	Generic3	None
Class	None	View Permissions	Global
Instructions	*No Instructions*		
ROUTING LISTS			
1	Review Initial PER		Inactive
	Review New PER		
	• ^SO(Strasser, David W) - Review - Concur - 10/15/2008 1342 *Instructions:*		
	• ^PER Screening(Brown, Nancy L) - Review - Concur - 10/16/2008 1130 *Instructions:*		
	• ^Mgr Review(Owen, Annette) - Review - Concur - 10/20/2008 1047 *Instructions:*		
ATTACHMENTS			
Attachments	1. Link to PER		
COLLABORATION			
COMMENTS			
No Comments			
TASK DUE DATE HISTORY			
Modified	10/15/2008 0858 - ^PER Coordinator	New Due Date	10/17/2008 1630

Task# WRPS-PER-2008-0074
SUB TASK HISTORY
No Subtasks
-- end of report --

Save

Problem Evaluation Request (PER)

WRPS-PER-2008-0075
Closed 10/20/2008 11:00

PER No	Date of Discovery	Time of Discovery (24:00)	Project
WRPS-PER-2008-0075	10/14/2008	14:00	Eng-BO

Location

AX Farm

How Was Problem Discovered

Maintenance Activity

Description of Concern or Problem

On 10/14/2008, the 241-AX-102, open face breather filter failed annual aerosol testing under work document TFC-WO-08-0732. The filter normalized differential pressure was 2.08" w.g. which is greater than the maximum allowable pressure of 1.6" w.g.

Requirement Not Satisfied	Source Document Number
Annual Aerosol Testing	RPP-16922, Environmental Specifications Requirements
Equipment Identification Number	**System Identification**
AX102-WST-FLT-101	Ventilation Tank Primary

Immediate actions Taken or Planned

FWS reported failure and work document TFC-WO-08-1912 was generated to replace the failed filter.

Recommended Corrective actions

Replace 241-AX-102 within the time frame note in RPP-16922 and then using work document TFC-WO-08-1914 perform aerosol testing.

Recommend PER sig level of Trend Only

Originator Contact

No

Originators Name	Originators ID	Originators Phone	Date Initiated
Gauck, Gregory J	H0031592	(509) 373-1779	10/15/2008

SHIFT OPERATIONS REVIEW

Title

AX-102 Breather Filter failed Aerosol test

How Discovered	Agency
self-ID result of event	

Reportability	SSC Operability	Operability Review	Comp Measures Req
Non-Reportable	N/A	N/A	

Describe actions Taken or Recommended

15 days to replace filter. No additional actions taken or recommended by Base Ops SO

SO Reviewer Name	SO Reviewer ID	SO Reviewer Phone	SO Review Date
Strasser, David W	H0075556	(509) 373-2689	10/15/2008

SCREENING

PER Significance Level			
Trend Only			
Independent Assessment Review	**Occurrence Report Number**	**Externally Identified**	
No		No	
Assigned Responsible Manager	**Facilities Rep / SSO**	**Safety Management Rep**	
Woehle, Christopher P			

Program	Safety Management Program
• **N/A**	• **N/A**

PER Screening Comments			
No comments (Nancy Brown 10/16/08)			
Causal Code			
MGT/Comm/Train	**Human Performance**	**GEMS**	**Equip/Eng/Other**
Failed Barrier	**ORPS Code**	**Functional Area**	**Work Process**
	Not Applicable	Maintenance	• Maintenance: Corrective
ISMS	**Consequence Code**		
Perform work within the controls	• **N/A** - No consequence code applies		
PER Screening Chair	**PER Screening Chair ID**	**PER Screening Chair Phone**	**PER Screening Date**
Brown, Nancy L	H0088797	(509) 373-0992	10/16/2008
PAAA REVIEW			
PAAA Screening	**PAAA Codes**	**Function Codes**	
Not subject to PAAA			
NTS Report Number	**NTS Report Date**		
Repetitive / Recurrent	**Programmatic**	**Intentional Violation / Misrepresentation**	
No	No	No	
PAAA Screening Comments			
PAAA Reviewer Name	**PAAA Review Date**		
Anderson, Craig E	10/16/2008		
PAAA Approver Name	**PAAA Approve Date**		
Quintana, Michael S	10/20/2008		
SENIOR MANAGEMENT REVIEW/CONCURRENCE			
TF Operations Morning Leadership Call			
None. 10/20/08			
Instructions for Responsible Manager			
Senior Management	**Sr Mgmt ID**	**Sr Mgmt Phone**	**Sr Mgmt Review Date**
Owen, Annette	H0054042	(509) 372-0533	10/20/2008
ATTACHMENTS			
Link to PER			

-- End of Report --
10/20/2008 11:15 AM

Task# WRPS-PER-2008-0075			
E-STARS[R] Report Task Detail Report 10/20/2008 1115			
TASK INFORMATION			
Task#	WRPS-PER-2008-0075		
Subject	Trend; AX-102 Breather Filter failed Aerosol test		
Parent Task#		Status	CLOSED 10/20/2008
Reference		Due	10/17/2008
Originator	^PER Coordinator	Priority	Medium
Originator Phone		Category	PER
Origination Date	10/15/2008 0905	Generic1	None
Remote Task#		Generic2	None
Deliverable	PER Review	Generic3	None
Class	None	View Permissions	Global
Instructions	*No Instructions*		
ROUTING LISTS			
1	Review Initial PER		Inactive
	Review New PER		
	• ^SO(Strasser, David W) - Review - Concur - 10/15/2008 1344 *Instructions:*		
	• ^PER Screening(Brown, Nancy L) - Review - Concur - 10/16/2008 1131 *Instructions:*		
	• ^Mgr Review(Owen, Annette) - Review - Concur - 10/20/2008 1047 *Instructions:*		
ATTACHMENTS			
Attachments	1. Link to PER		
COLLABORATION			
COMMENTS			
No Comments			
TASK DUE DATE HISTORY			
Modified	10/15/2008 0905 - ^PER Coordinator	New Due Date	10/17/2008 1630

Task# WRPS-PER-2008-0075
SUB TASK HISTORY
No Subtasks
-- end of report --

Save

Problem Evaluation Request (PER)

WRPS-PER-2008-0076
Closed 12/05/2008 09:45

PER No	Date of Discovery	Time of Discovery (24:00)	Project
WRPS-PER-2008-0076	10/15/2008	09:30	Site Services

Location

222S

How Was Problem Discovered

Procedure Review

Description of Concern or Problem

Two procedures, specificially ATS-LO-100-151 and ATS-LO-100-171, each have guidance and criteria for disposing liquid waste. ATS-LO-100-151 Step 8.4.7.b directs placement of a "POUR" or "SLURP" based on the shallow dose rate of 100 mrem/hr (less than--POUR, greater than or equal to--SLURP). ATS-LO-100-171 steps 6.2 and 6.3 have the shallow dose rate for determining SLURP or POUR at 500 mrem/hr. RWP S-491, lists the same values as ATS-LO-100-171 (500 mrem/hr).

Requirement Not Satisfied	Source Document Number

Equipment Identification Number	System Identification

Immediate actions Taken or Planned

Found during a periodic review of ATS-LO-100-151. Currently, we are not using ATS-LO-100-171 due to 2B hood 16 being out of service. Difference between procedures and RWP noted during review and changes recommended for ATS-LO-100-151

Recommended Corrective actions

Improve the crosstalk of procedures not only within ATS (222-S Laboratory) but also between the ATS and ATL Procedures. We have to flip from one procedure to the other (ATS or ATL) depending on who our organization is supporting and the procedures for the same job by different contractors are becoming different in application and scope.

Originator Contact

I would like to help in investigating the cause

Originators Name	Originators ID	Originators Phone	Date Initiated
Kimmel, Thomas S	H3529400	(509) 373-2018	10/15/2008

SHIFT OPERATIONS REVIEW

Title

Lab waste transfer inconsistencies

How Discovered	Agency
self-ID prior to event	

Reportability	SSC Operability	Operability Review	Comp Measures Req
Non-Reportable	N/A	N/A	

Describe actions Taken or Recommended

nothing additional at this time.

SO Reviewer Name	SO Reviewer ID	SO Reviewer Phone	SO Review Date
Greenough, Keith J	H0068375	(509) 373-9541	10/20/2008

SCREENING

PER Significance Level	
PIE/CIM	

Independent Assessment Review	Occurrence Report Number	Externally Identified	
No		No	
Assigned			

Responsible Manager	Facilities Rep / SSO	Safety Management Rep	
Upchurch, Craig E			
Program		**Safety Management Program**	
• **N/A**		• **N/A**	
PER Screening Comments			
No comments (Nancy Brown 10/21/08)			
Causal Code			
MGT/Comm/Train	**Human Performance**	**GEMS**	**Equip/Eng/Other**
Failed Barrier	**ORPS Code**	**Functional Area**	**Work Process**
	Not Applicable	Waste Management	• Procedures: Analytical
ISMS	**Consequence Code**		
Identify and analyze hazards	• Waste management-general - Weaknesses in overall waste management programmatic activities that could result in regulatory noncompliances or otherwise render the waste management program LTA		
PER Screening Chair	**PER Screening Chair ID**	**PER Screening Chair Phone**	**PER Screening Date**
Brown, Nancy L	H0088797	(509) 373-0992	10/21/2008
PAAA REVIEW			
PAAA Screening	**PAAA Codes**	**Function Codes**	
PAAA, Non-NTS Reportable	• 10 CFR 830.122 (d)(1)	• Procedure Quality	
NTS Report Number	**NTS Report Date**		
Repetitive / Recurrent	**Programmatic**	**Intentional Violation / Misrepresentation**	
No	No	No	
PAAA Screening Comments			
Entered review for CE Anderson.			
PAAA Reviewer Name	**PAAA Review Date**		
Quintana, Michael S	10/22/2008		
PAAA Approver Name	**PAAA Approve Date**		
Anderson, Craig E	10/27/2008		
SENIOR MANAGEMENT REVIEW/CONCURRENCE			
TF Operations Morning Leadership Call			
None. 10/22/08			
Instructions for Responsible Manager			
Evaluate suggestion, enter comments and required actions on PIE/CIM tab of the PER. Disposition in accordance with TFC-ESHQ-Q_C-C-01, Problem Evaluation Request.			
Senior Management	**Sr Mgmt ID**	**Sr Mgmt Phone**	**Sr Mgmt Review Date**
Owen, Annette	H0054042	(509) 372-0533	10/22/2008
CAUSE ANALYSIS			
Description of Occurrence			

Extent of Condition

Safety Significance

Generic Implications

Remedial Corrective Action

Causal Analysis, Apparent Cause and/or Root Cause Analysis

PIE/CIM

Evaluation of PIE/CIM Initiative

Procedure ATS-LO-100-151 was recently reviewed. Changes were implemented to include changing the shallow dose rate from 100 mrem/hr to 500 mrem/hr to match the RWP and ATS-LO-100-171 per RadCon/originator's suggestion. ATS-LO-100-151 has been released for use as of 11/17/2008.

ATTACHMENTS

ATS-LO-100-151.doc

Link to PER

WRPS-PER-2008-0076 - PER Screening Information From 222-S.msg

AUDIT HISTORY

Change Date	Auditor	Comments
10/22/2008 08:42	Owen, Annette	Responsible Manager Task Launched by Owen, Annette
10/29/2008 10:44	Alexander, Sandy K	'Program/Project' was changed from ATS/222-S to Site Services based on assignment of RM.

-- End of Report --
12/05/2008 09:45 AM

Task# WRPS-PER-2008-0076

E-STARS[R] Report
Task Detail Report
12/05/2008 0945

TASK INFORMATION

Task#	WRPS-PER-2008-0076		
Subject	PIE; Lab waste transfer inconsistencies		
Parent Task#		Status	CLOSED 12/05/2008
Reference		Due	12/14/2008
Originator	^PER Coordinator	Priority	Medium
Originator Phone		Category	PER
Origination Date	10/15/2008 0944	Generic1	None
Remote Task#		Generic2	None
Deliverable	PER Review	Generic3	None
Class	None	View Permissions	Global
Instructions	*No Instructions*		

ROUTING LISTS

1	Responsible Manager	Inactive
	Evaluate suggestion, enter comments and required actions on PIE/CIM tab of the PER. Disposition in accordance with TFC-ESHQ-Q_C-C-01, Problem Evaluation Request.	
	• Upchurch, Craig E - Assign - Completed with comments - 12/04/2008 1313 *Instructions:*	
	• Upchurch, Craig E - Assign - Completed with comments - 12/04/2008 1418 *Instructions:* Did you contact the originator about the PER? Document your contact in the response window.	
2	Review Initial PER	Inactive
	Review New PER	
	• ^SO(Greenough, Keith J) - Review - Concur with comments - 10/20/2008 1627 *Instructions:*	
	• ^PER Screening(Brown, Nancy L) - Review - Concur - 10/21/2008 1504 *Instructions:*	
	• ^Mgr Review(Owen, Annette) - Review - Concur - 10/22/2008 0842 *Instructions:*	

ATTACHMENTS

Task# WRPS-PER-2008-0076	
Attachments	1. ATS-LO-100-151.doc 2. Link to PER 3. WRPS-PER-2008-0076 - PER Screening Information From 222-S.msg
COLLABORATION	
COMMENTS	
Poster	^SO (Greenough, Keith J) - 10/20/2008 0410
	Concur
	222-S SO Screen completed.
Poster	Upchurch, Craig E (Erickson, Janice l (Jan)) - 12/04/2008 0112
	From: Lehmann, Cecily Y Sent: Wednesday, December 03, 2008 11:29 AM To: Upchurch, Craig E Cc: Nielsen, Judith A; Kimmel, Thomas S Subject: WRPS-PER-2008-0076 Craig, Here is the information for WRPS-PER-2008-0076. I asked Kimmel if he had any other suggestions as to how we could improve this process and he had no additional ideas. Corrective action taken: Procedure ATS-LO-100-151 was recently reviewed. Changes were implemented to include changing the shallow dose rate from 100 mrem/hr to 500 mrem/hr to match the RWP and ATS-LO-100-171 per RadCon/originator's suggestion. ATS-LO-100-151 has been released for use as of 11/17/2008. Let me know if you need anything else. Thanks, Cecily Lehmann WRPS/222-S Labs 509-372-8085
Poster	Upchurch, Craig E (Erickson, Janice l (Jan)) - 12/04/2008 0112
	Completed
	Procedure ATS-LO-100-151 was recently reviewed. Changes were implemented to include changing the shallow dose rate from 100 mrem/hr to 500 mrem/hr to match the RWP and ATS-LO-100-171 per RadCon/originator's suggestion. ATS-LO-100-151 has been released for use as of 11/17/2008.
Poster	Upchurch, Craig E (Erickson, Janice l (Jan)) - 12/04/2008 0212
	Completed

Task# WRPS-PER-2008-0076			
	Originator of PER was notified by e-mail of steps taken to correct the procedures.		
Poster	^PER Coordinator (Glaman, Linda R) - 12/05/2008 0912		
	CLOSED		
	PER complete. L Glaman		
TASK DUE DATE HISTORY			
Modified	10/22/2008 0842 - ^PER Coordinator	New Due Date	12/14/2008 1630
Modified	10/22/2008 0842 - ^PER Coordinator	New Due Date	12/14/2008 1630
Modified	10/15/2008 0944 - ^PER Coordinator	New Due Date	10/17/2008 1630
SUB TASK HISTORY			
No Subtasks			
-- end of report --			

Laboratory Waste Generation

Technical Authority: CY Lehmann/KA Keltner **Review Designation: E,S,R,W**

CONTENTS

1.0 PURPOSE AND SCOPE 6

2.0 REFERENCES 6

3.0 PRECAUTIONS AND LIMITATIONS 7
3.1 Safety 7
3.2 Limitations 7

4.0 SPECIAL TOOLS, EQUIPMENT, AND MATERIALS 8

5.0 PREREQUISITES 9

6.0 UNKNOWN WASTES INSTRUCTIONS 10
6.1 Actions upon Discovery of Unknown Waste 10

7.0 SPILL INSTRUCTIONS 10
7.1 Actions in the Event of a Spill 10

8.0 HAZARDOUS/MIXED WASTE INSTRUCTIONS 11
8.1 Hazardous/Mixed Solid Waste Container Preparation 12
8.2 Hazardous/Mixed Solid Waste Collection and Management 13
8.3 Hazardous/Mixed Liquid Waste Container Preparation 15
8.4 Hazardous/Mixed Liquid Waste Collection and Management 18
8.5 Secondary Containment Labeling After Removing Waste Container 22

9.0 WASTE FROM UNUSED AND/OR EXPIRED CHEMICALS 23
9.1 Managing Waste from Unused Chemicals Specified in a Procedure or Test Plan 23
9.2 Unused Chemical Waste Collection and Management 23

10.0 LOW-LEVEL RADIOACTIVE WASTE (LLW) INSTRUCTIONS 25
10.1 Room LLW Box Preparation 25
10.2 Room LLW Box Collection and Management 26
10.3 Room LLW Box Changeout 27
10.4 LLW Container Preparation 28
10.5 LLW Container Collection and Management 29

11.0 EMPTY CONTAINER INSTRUCTIONS 31
11.1 Empty Containers with Chemical Inventory Tracking System (CITS) barcodes 31
11.2 Empty Containers as Hazardous Waste 31
11.3 Empty Containers as Nonhazardous Waste 31

12.0 HOT CELL WASTE COLLECTION AND MANAGEMENT 32
12.1 Load in/out 32

13.0 LEAD WASTE (WASTE CODE D008) AND RECYCLE INSTRUCTIONS 32
13.1 Determination of Lead Type 32
13.2 Preparation of Lead Solids for Recycle 32
13.3 Managing Nonrecyclable Lead Waste 33

14.0 RECYCLABLE MATERIAL 33
14.1 Management of Recyclable Material 33

15.0 EXCESSING EQUIPMENT AS WASTE 33
15.1 Excessing 33

16.0 PCB INSTRUCTIONS 34
16.1 Facility PCB Signage 34
16.2 Analytical Waste 34
16.3 Decontamination of Equipment in Order to Exit TSCA Regulation 37

17.0 MAINTENANCE WASTE INSTRUCTIONS 38
17.1 Maintenance/Work Control Waste-Generating Activities 38

18.0 RADIOACTIVE CONTAMINATED RAGS INSTRUCTIONS 38
18.1 Radioactive Contaminated Acid/Caustic Rags 38

19.0 CONTAINER DISPOSAL REQUEST (CDR) INSTRUCTIONS 39
19.1 Completing the CDR form 39
19.2 219-S Transfer Status from CDRD 39
19.3 Waste Collection Status from CDRD 40

20.0 RECORDS 40

21.0 BIBLIOGRAPHY 41

APPENDICES

Appendix A. Definitions 42

Appendix B. Examples of Hazardous Waste Label and Waste Stream Labels 45

Appendix C. Example of Container Inventory Sheet 46

Appendix D. Example of "SUSPECTED PCBs" Label. 47

Appendix F. Example of Container Disposal Request (CDR) Entry Form in the CDRD 49

Appendix G. CDR Field Entry Requirements 50

Appendix H. RAM Tag 51

Appendix I. Example of Slurp and Pour Labels for Liquid Waste 52

Appendix J. Example of Waste Contents Sheet 53

Appendix K. Example of 222-S Hazardous Mixed Waste Labels 54

Appendix L. Example of "PCB Analysis Results" 55

Appendix M. Example of Low-Level Radioactive Waste Tag 56

FIGURES

Figure 1. Typical Waste Accumulation Bottle 58

Revision Status

Change Level	Date	Change Document	Pages	Description
E-0	10/07/98	N/A	All	Exempt non-contaminated glass and other items from packaging and labeling requirements. Change Mrad/hr to mr/hr. Format change.
E-1	10/15/98	N/A	25	Editorial only. Change Step 6.11.11 top read 6.11.7 through 6.11.9.
E-3	3/29/99	99-30	22 and 24	Editorial only. Change step callouts
E-3	3/29/99	99-30	22 and 24	Editorial only. Change step callouts
F-0	5/10/2000	PACR 20-104	18, 20, 21, 23, 31	Updated shielded waste requirement for dose rate at contact. Field Change Number 222-00-003
G-0	05/8/2001	DCF 01-57	All	Change dose rate from deep dose to window closed uncorrected dose rates. Revised hot cell waste procedure steps for colleting and managing waste.
H-0	11/4/2002	N/A	All	Complete rewrite. Combined LO-110-128, LO-100-151, LO-100-114, and Standing Order 2000-106.
H-1	1/8/2003	NA	All	Corrected second note in Appendix M. Reassigned work formerly completed by the Shift Operations Manager
H-2	3/31/2003	NA	72	Added Appendix R for the management of PCB wastes.
H-3	8/28/2003	NA	44-49	Further clarification of PCB waste requirements
I-0	10/22/2003	NA	All	Removed shredder instructions; updated references
J-0	02/18/2004	NA	All	Clarify shielding for ALARA purposes; update container disposal request instructions and references and for clarification

Change Level	Date	Change Document	Pages	Description
K-0	11/12/2004	NA	All	Changes made to handling room waste and packaging of LLR and mixed waste.
K-1	11/18/2004	NA	12	Editorial change (drums to boxes); update procedure title
K-2	05/02/2005	N/A	All	Added notes to sections 7.7.1, 7.12.2 allowing consolidation of small containers; added note and clarification in section 7.12 regarding label placement on waste containers.
K-3	02/06/2006	NA	1	Editorial change to designate as ATS-specific procedure.
L-0	11/13/2006	NA	All	Update to reflect ATL/ATS joint ownership; total rewrite/no redline/strikeout; reorganize procedure to improve work flow and for clarification.
M-0	11/16/2006	NA	All	Correct procedure step references and appendix numbers

Change Level	Released for Training Date	Released for Use Date	Pages	Description
N-0	11/12/2008	11/17/2008	All	Periodic review; rewrite (no redline/strikeout); revise to improve work flow and for clarification based on committee input; remove 6-point survey; update slurp/pour dose requirements; revise liquid waste management section; add recyclable material section; revise PCB section for clarification; remove appendices B, E, D, H, L, and S; correct LLW acronym; update records box and references

All trademarks and registered trademarks are the property of their respective owners.

1.0 PURPOSE AND SCOPE

This procedure establishes guidelines for collecting and managing liquid laboratory wastes, solid laboratory wastes including low-level radioactive and radioactive hazardous (mixed) wastes, recyclable materials, and polychlorinated biphenyl (PCB) containing wastes within the radiologically controlled areas of the 222-S Laboratory.

2.0 REFERENCES

ATS-GD-1027, *Container Disposal Request Database (CDRD)*

HNF-EP-0863, *Management Plan for Recyclable Materials Administered by Hanford's Centralized consolidation/Recycling Center*

LO-100-063, *Chemical Management*

ATS-LO-100-107, *222-S Laboratory Hot Cell Cubicle Housekeeping and Waste Management*

ATS-LO-100-110, *222-S Laboratory Cubicle Airlock Operation for 1A, 1F, 1E-1 and 1E-2*

ATS-LO-150-063, *222-S Laboratory Chemical Management*

LO-161-003, *Fume Hood Use*

ATS-LO-161-003, *222-S Laboratory Fume Hood Use*

LO-161-172, *Perform Complex 11A Hot Cell Operation*

ATS-LO-161-172, *222-S Laboratory Perform Complex 11A Hot Cell Operation*

ATS-LO-190-101, *222-S Laboratory Fume Hood Contamination*

LO-190-101, *Fume Hood Contamination*

ATS-LO-100-166, *222-S Laboratory Management of 222-S Laboratory Waste Management Areas*

LO-100-169, *Collect and Manage Counting Room Vials and Planchets Following Analysis*

ATS-LO-100-171, *222-S Laboratory Waste Transfer at Hood 16 in Room 2B to the 219-S Tank System*

ATS-LO-150-062, *Management of Shock-Sensitive and Peroxide-Forming Chemicals in the Laboratory*

3.0 PRECAUTIONS AND LIMITATIONS

3.1 Safety

Do not place incompatible materials into the same container. Examples of these include oxidizing acids (e.g., nitric acid and sulfuric acid) and rags or paper, acid waste, and cyanide or sulfides, oxidizers and reducers, and peroxides and paper. If a waste is believed to be incompatible with other wastes being handled, contact the Facility Operations Manager (FOM) and the cognizant chemist and/or immediate supervisor for directions before proceeding.

Segregate reactive materials from other wastes. These include alkali metals, explosives, pyrophorics (uranium metal), and chelating compounds. If a waste is believed to be reactive, contact the cognizant chemist and/or immediate supervisor before proceeding.

Sharp objects and sharp edges on waste materials being packaged must be padded and taped or packaged in a rigid container to prevent injury.

Wear leather gloves over surgical gloves when handling sharp objects.

Use proper lifting techniques when lifting heavy or awkward loads.

A cart should be used for transporting containers of waste which are heavy (i.e., lead lined), pose a spill hazard, or pose a radiological exposure concern.

To help prevent chemical reactions and container deterioration, waste collection containers must be compatible with the waste being placed into them. Containers and secondary containers must be made of or lined with materials that will not react with the waste, so that the ability of the container to contain waste is not impaired. For example, hydrofluoric acid will etch glass and should be collected in polyethylene containers. Review the Waste Stream Fact Sheet (WSFS) or the procedure generating the waste, or contact the cognizant chemist for guidance on appropriate container.

When generating waste in a radiological area fume hood satellite accumulation area (SAA), perform hood front Cutie Pie (CP) Measurements, and take appropriate actions in accordance with LO-161-003 or ATS-LO-161-003.

3.2 Limitations

Waste managed by this procedure must be generated in a radiologically controlled area of 222-S Laboratory.

4.0 SPECIAL TOOLS, EQUIPMENT, AND MATERIALS

Hazardous Waste label (see Appendix B)

Approved sorbent (e.g., Waterworks SP-400, Imbiber beads)

Approved containers (identified in laboratory analytical [LA] procedures or this procedure)

Caps, Teflon-lined

Caps, Teflon-lined, vented

Container Disposal Request (CDR) (Appendix F, G)

Funnel of appropriate material, if necessary

Gloves (leather)

Gloves - lead lined (optional)

Gloves - surgeons'

Gloves – Silver Shield

Hazardous Mixed Waste Labels (Appendix K)

Low-Level Radioactive Waste Tag (Appendix M)

Plastic bags (examples: 7-mil reinforced thickness, 4-mil heavy bags, 0.015-mil light bags)

RAM Tag (Appendix H)

Rubber and lead shielding

Rubber stoppers to fit bottles and test tubes

Secondary containment--Preferred types: glass or clear plastic

Tape

Tape, packaging

Tape, vinyl adhesive

Transfer pipette

Waste Contents Sheet (Appendix J)

Waste Stream Fact Sheet Label (Appendix B)

M_S and M_L ("Caution Contains PCB") label (Appendix E)

"Suspect PCB" label (Appendix D)

5.0 PREREQUISITES

Course number 023123, "222-S Laboratory Basic Waste Generator," is required before use of this procedure.

Course number 020050, "Self Monitoring Training" is required before generating waste in a fume hood.

Training on ATS-LO-100-166 is required before generating waste.

Training on LO-161-003 or ATS-LO-161-003 is required before generating waste in a radiological area fume hood.

Ensure an SAA is established before initiating work where hazardous or dangerous (mixed) waste is generated.

When using a test plan, performing method development, or when more than one test plan or method development process is generating liquid waste to a container in the hood or bench-top SAA, the following additional requirements apply:

- The technical authority (TA) for the procedure generating the waste must perform a review of available references to evaluate potential reactions and other hazards for chemicals used in analysis.
- The TA's signature on the Waste Container Inventory Sheet signifies that a compatibility review has been completed.
- Before combining waste from multiple waste streams, an operator aid at each SAA will specify the waste streams that can be combined.

NOTE

- This procedure is written so that each section may be performed independently of the other sections. The sections do not have to be performed in the order written.
- Definitions are described in Appendix A.

6.0 UNKNOWN WASTES INSTRUCTIONS

6.1 Actions upon Discovery of Unknown Waste

6.1.1 **REPORT** (immediately) unknown wastes to first-line manager and FOM (day shift) or facility technical point-of-contact (FTPC) (backshift or weekends) upon discovery.

6.1.2 **MANAGE** the discovery of any unknown wastes in accordance with ATS-LO-100-166, including the labeling and notification requirements.

6.1.3 (FOM [day shift]/FTPC [off shift hours]) **MANAGE** in accordance with ATS-LO-100-166.

7.0 SPILL INSTRUCTIONS

NOTE

Spills and releases are managed in accordance with ERP-222S-009, *Spill/Release/Continuous Air Monitor Alarm.*

7.1 Actions in the Event of a Spill

7.1.1 **STOP** work.

7.1.2 **WARN** others to stay away.

7.1.3 **ISOLATE** the area.

7.1.4 **MINIMIZE** exposure.

7.1.5 **NOTIFY** FOM (day shift hours) or FTPC (off-shift hours).

7.1.6 **AWAIT** further instructions.

8.0 HAZARDOUS/MIXED WASTE INSTRUCTIONS

NOTES

- If not specifically addressed in a Waste Stream Fact Sheet (WSFS) or the procedure being used, a Waste Container Inventory Sheet (see Appendix C) must be used to document the volume of waste generated by each method as it is collected.
- When working with a sample that contains a listed waste code (e.g., F, P, U, or K prefix), the waste code must be marked on the container. This information must be on the OmniLIMS waste information batch sheet.
- When waste to be collected is known to have high dose rates, container selection may include PVC pipe containers or rubber-shielded containers. PVC pipe containers are not considered shielded containers, but do reduce dose. Rubber-shielded containers, however, are considered shielded containers.
- Hazardous wastes or mixed wastes must be managed in an SAA, a 90-day accumulation area, or a treatment, storage, and disposal (TSD) facility.
- Movements of hazardous waste containers from one SAA to another SAA are prohibited. Hazardous waste may go from SAA to 90-day accumulation area or TSD.
- Low-level radioactive wastes (LLW) are not combined with hazardous wastes or mixed wastes. Mixing waste in this manner will be in violation of state and/or federal regulations.
- Consolidation of small containers containing liquid or solid waste into a large container to provide enough space to meet labeling requirements of waste management procedures is allowed.

8.1 Hazardous/Mixed Solid Waste Container Preparation

NOTE

- Chemical formulas are not acceptable to use for waste labeling. The chemical name (nomenclature) must be used.
- Acutely hazardous waste may be accumulated up to one (1) quart total volume, maximum, in an SAA.
- Acutely hazardous waste is identified with waste codes that begin with a "P," F020, F021, F022, F023, F026, or F027.
- Hazardous waste (that is not acutely hazardous) may be accumulated up to 55 gallons total volume in an SAA.

8.1.1 **OBTAIN** container that will be compatible with the waste that it will hold.

8.1.2 **OBTAIN** waste code information for analytical samples from the OmniLIMS waste information batch sheet or the project coordinator/project manager.

- Waste codes F001, F002, F003, F004, and F005 apply to any solid waste that comes into contact with a Tank Farm sample or waste resulting from Tank Farm sample analysis.
- Listed waste codes of the sample (examples are F- or P-coded wastes) apply to any solid waste that comes into contact with the sample or waste resulting from analysis.

8.1.3 **ENSURE** peroxide-forming chemical waste is also labeled according to ATS-LO-150-062.

8.1.4 **OBTAIN** labels.

a. **SEE** section 16.0 for additional waste label requirements for PCB containing samples.

b. The mixed waste/hazardous waste label must include the words **HAZARDOUS WASTE** (Appendix B and K), **major risk** (e.g., toxic, flammable, corrosive), and the analytical sample's waste codes from the OmniLIMS waste information batch sheet or project coordinator/project manager.

c. **MARK** corrosive waste containers with "acidic" (≤ 2) or "basic" (≥ 12.5) or pH range.

d. **WRITE** room number and hood number or location on mixed waste label (see Appendix K).

e. **MARK** known alpha waste with blue tape.

8.1.5 **PLACE** labels visibly on the container.

a. **IF** a rigid container is used, **LABEL** side and top.

8.1.6 **OBTAIN** a Waste Contents Sheet.

a. **IF** more than one hazardous/mixed waste container is going to be used in the same area, **GIVE** each container and Waste Content Sheet a unique number.

b. Appropriately **MARK** type of waste to be collected, location collected, and size of container.

c. **MARK** contents sheet with blue tape for known alpha and/or appropriate PCB label, if applicable.

8.1.7 **ADD** a volume of approved sorbent equal to twice the volume of liquid to be sorbed, as a minimum, to a waste container that has residual liquids to ensure the residue is sorbed.

- Sorbent such as Imbiber beads is used for residual organic liquids.
- Sorbent such as Waterworks SP-400 is used for residual aqueous liquids.

a. **CONTACT** Hazardous Material Control (HMC) if an approved sorbent is not available.

8.1.8 **PLACE** prepared container into area for waste collection, ensuring all labels are visible.

8.1.9 **POST** Waste Contents Sheet in a visible location near the container.

8.2 Hazardous/Mixed Solid Waste Collection and Management

8.2.1 **CONTACT** HMC for assistance in managing the following waste types:

- Waste containers shielded with lead
- Items too large to fit in an approved container.

a. **IF** waste to be collected is hot cell waste, **PROCEED** to section 12.0.

8.2.2 **PLACE** only hazardous mixed waste into container.

8.2.3 **FILL** out Waste Contents Sheet when collecting waste.

a. **ITEMIZE** all items placed in the waste container.

WARNING
All corners and sharp edges must be padded and taped or packaged in a rigid container to prevent injury.

8.2.4 **LABEL** "caution sharp objects" when container contains sharp objects.

8.2.5 **ENSURE** waste is in double containment and that outer containment has no detectable removable contamination when waste container is full or removed from service

a. **ARRANGE** to have acutely hazardous waste transferred to a 90-day accumulation area within 3 days of accumulating a maximum of 1 quart in an SAA.

8.2.6 **REQUEST** Radiological Control Technician (RCT) to perform dose rate, contamination survey, fill out and
ATTACH RAM tag (see Appendix H).

a. **APPLY** shielding when readings are greater than 200 mR/hr at contact window closed (uncorrected).

- Rubber shielding should be used preferentially over lead as shielding if possible.
- If readings are less than 200 mR/hr at contact, window closed (uncorrected) shielding may be applied to the waste container for ALARA and waste packaging purposes.

b. **IF** lead shielding is used,

1. **MARK** container with the words "Lead as Shielding."
2. **MANAGE** the container as hazardous/mixed waste.

c. **RECORD** on the Waste Contents Sheet the type, thickness, and approximate length of shielding placed around the container.

8.2.7 **ENSURE** Waste Contents Sheet is completed as follows:

a. **RECORD** size of container in gallons.

NOTE

Percentages of waste include the container, items inside container, sorbent, tape, and inner bags. The percentages are based on volume.

b. **RECORD** percentages of waste to equal 100 percent.

c. **RECORD** location (e.g., room and hood numbers).

d. **RECORD** the date.

e. **PRINT** your name.

8.2.8 **ATTACH** Waste Content Sheet to outside of bag.

8.2.9 **ENSURE** Waste Content Sheet and RAM tag are attached to outermost packaging before transferring to a 90-day accumulation area.

WARNING

State regulations require dangerous waste/hazardous waste be under control of the generator at all times. DO NOT leave waste container unattended outside an SAA or a 90-day accumulation area.

8.2.10 **TRANSFER** waste to 90-day accumulation area.

8.2.11 **LOG** waste into 90-day accumulation area in accordance with ATS-LO-100-166.

8.3 Hazardous/Mixed Liquid Waste Container Preparation

Liquid wastes may be collected in either collection bottles and or vacuum trap bottles. They are collected and managed under the following limitations. To ensure waste compatibility, only those waste streams identified on the WSFS, Waste Planning Checklist, and/or on the SAA posting are allowed to be collected in the same container. If using an inventory sheet, verify compatibility of the waste **before** collection.

8.3.1 Acids, oxidizers, or bases may be placed into a trap or collection bottle with the following stipulations:

- Acids, oxidizers, or bases must be in separate bottles, unless specifically addressed in a laboratory analytical procedure that they be combined.
- Collection bottles or trap bottles are clearly labeled with the major risk as well as acid, base, or oxidizer.
- The name of the chemical is on the label (for example nitric acid).

WARNING

Be especially careful when adding strong oxidizers to trap bottle or collection containers. Pour slowly, and observe/control any reaction. Some examples of strong oxidizers are hydrogen peroxide, potassium persulfate, potassium permanganate, potassium dichromate.

NOTES

- Chemical formulas are not acceptable to use for waste labeling. The chemical name (nomenclature) must be used.
- Amber-colored bottles are not acceptable for use as collection bottles (unless otherwise required by the controlling procedure) or WSFS.
- Secondary containment is required for all collection bottles. Clear secondary containers are preferred (either glass or plastic).
- The smallest possible collection bottle should be used for high dose rate waste streams. (i.e., pH procedure or undiluted sample).
- For acutely hazardous waste, use 1 quart bottles, maximum. No more than 1 quart total may be in any SAA.
- Hazardous waste (that is not acutely hazardous) may be accumulated up to 55 gallons total volume in an SAA.

8.3.2 **OBTAIN** a collection bottle of up to 1 gallon, as needed.

a. **TAILOR** the size of the bottle to the amount of waste being collected for as low as reasonably achievable (ALARA) purposes.

b. **SELECT** type of bottle in accordance with WSFS, test plan, or Waste Planning Checklist.

1. **USE** vented caps when required to prevent pressurization.

2. **CONSIDER** choosing a bottle that has solid Teflon caps available for use when the container is full or no longer needed.

c. **LABEL** secondary containment the same as the bottle if the label on the primary container is not visible.

d. **CONSULT** with responsible chemist to resolve questions on secondary containment compatibility.

8.3.3 **LABEL** bottle with the following:

a. A completed Waste Stream Label (with information obtained from WSFS or test plan) (see Appendix B).

b. A completed Hazardous Waste Label (if waste is hazardous) (see Appendix B) or a combination label can be used as long as the words **HAZARDOUS WASTE, major risk** (e.g., toxic, flammable, oxidizer, or corrosive) are included on the label.

c. **MARK** corrosive waste containers with "acidic" (≤ 2) or "basic" (≥ 12.5) or pH range.

d. For waste suspected to contain PCBs but not yet analyzed for PCBs, a white and red "**SUSPECT PCB**" label must be applied with the project name noted on label (see subsection 16.0).

e. For waste known to contain PCBs at regulated concentrations, a yellow and black **M_S ("CAUTION CONTAINS PCB")** label must be applied with the project location noted on label (see section 16.0).

f. **MARK** any listed waste codes from the projects collected on the bottle.

- Multiple projects may be collected in one bottle, but waste prohibited from 219-S must be segregated from waste permissible to 219-S. Failure to keep these segregated will prohibit the entire container from 219-S. Listed waste codes unique to a particular sample that are prohibited from 219-S can be found on the waste information batch sheet from OmniLIMS. For unique situations or additional questions, contact Environmental for the complete waste prohibitions to 219-S.

8.3.4 **ENSURE** peroxide-forming chemical waste also is labeled according to ATS-LO-150-062.

8.3.5 **PLACE** the bottle inside the secondary containment (shield, if necessary).

8.3.6 **CAP** bottle with vented cap when not actively collecting waste unless precluded by safety concerns in the procedure being operated.

8.4 Hazardous/Mixed Liquid Waste Collection and Management

NOTE

Additional instruction for scintillation and gamma energy analysis (GEA) vials is covered in LO-100-169.

8.4.1 **COLLECT** waste solutions into collection bottle, as needed, in accordance with the applicable procedure and WSFS or test plan.

a. **ENSURE** that no organic liquid is placed into an aqueous bottle, unless directed by the controlling procedure or test plan.

b. **FILL OUT** a Waste Container Inventory Sheet (Appendix C) when performing method development, when a WSFS does not exist, or may be used to assist in filling out CDR form information

1. **OBTAIN** a completed Chemical Compatibility form before generating waste that does not have a WSFS.

c. **ADD** additional waste code information to the waste container according to the OmniLIMS batch waste information report.

NOTES

- Unless precluded by safety concerns in the procedure being operated, all collection containers not hooked up to a vacuum system must be capped with a vented cap when waste is not being added to prevent pressurization.
- Vented caps may be replaced with solid caps to address concerns of volatile organics evaporation on a case-by-case basis. Consideration of pressurization must be addressed, and specific approval from the procedure technical authority must be obtained before exchanging caps.

8.4.2 **INSPECT** appearance of collection bottles for any of the following:

- Cracked or broken container
- Uncontained leak
- Unexpected chemical reaction and/or evidence of internal pressurization
- An effervescent solution or gas bubbles forming within the solution indicating strong oxidizers
- Extremely reactive elements in the bottle.

a. **RESPOND** to any of the above events as follows:

1. **DISCONTINUE** operation, and move away from the hood.

2. **WARN** others.

3. **ISOLATE** the area.

4. **NOTIFY** FOM and immediate manager to initiate recovery actions.

5. **AWAIT** instructions for follow-up actions.

8.4.3 **INSPECT** appearance of collection bottle cap(s) for cracks/breakage/disintegration

a. **NOTIFY** chemist/technical authority for assistance.

8.4.4 **INSPECT** collection bottles for layering.

a. **NOTIFY** the chemist/technical authority (TA) of the presence of an unexpected phase(s).

NOTE

Some organic liquids have a specific gravity that is less than that of water and some greater than that of water. It is possible to have an organic layer on top of an aqueous layer and/or on the bottom. It is also possible to have greater than three layers depending on polarity and specific gravity combinations. Never assume that the top layer is the organic layer.

b. **CONFER** with the TA to determine the aqueous and organic layer.

c. **SEPARATE** each phase into bottle designated for aqueous or organic material in accordance with the WSFS or test plan.

d. **ENTER** waste container information into the CDRD when a layer is not accounted for in the WSFS or test plan.

e. **LABEL** the collection bottles appropriately.

f. **CLOSE** the bottle using a solid cap.

g. **MANAGE** the bottles according to section 8.4.7.

8.4.5 **PREVENT** the spread of contamination (chemical and radiological) from funnels/traps when used:

a. **AVOID** touching the surfaces of the funnel or trap that have been in contact with the waste contents.

b. **PLACE** funnel or trap in the appropriate container.

c. **AVOID** dripping the contents of the trap or funnel.

WARNING

Contamination may be present on item(s) used to assist with collecting waste in the waste container.

8.4.6 **CONSIDER** the collection bottle full when the solution has reached the shoulder of the bottle (Figure 1) or longer needed.

8.4.7 **MANAGE** collection bottles that are full or no longer needed as follows:

a. **VERIFY** that no more than a single liquid phase is present in the solution.

b. **PROCEED** in accordance with section 8.4.4 if more than one phase is present.

c. **ARRANGE** to have acutely hazardous waste transferred to a 90-day accumulation area or a TSD within 3 days of accumulating a maximum of 1 quart in a SAA.

d. **REPLACE** vented caps with solid caps.

1. **USE** solid Teflon-lined caps when possible for waste NOT predesignated for 219-S.

e. **SEAL** containers around cap with vinyl adhesive tape.

1. **WRAP** tape in the same direction that the cap tightens.

- Waste predesignated for 219-S does not need to be taped.

8.4.8 **PREPARE** collection bottles that are approved for transfer to 219-S in accordance with WSFS, test plan, or waste planning checklist.

NOTES

- No chemical or radioactive materials may be poured down the 222-S drains discharging to the 207-SL retention basin (room sinks) without concurrence of Environmental.
- All aqueous waste destined for transfer to 219-S must have final approval from the analytical manager before transfer.
- For bottles destined for 219-S, labels must be visible.

a. **PERFORM** Cutie Pie (CP) measurement of waste container.

1. **If** waste container produces a CP measurement above 33mR/hr contact, **CONFER** with RCT for appropriate waste movement out of the hood.

2. **IF** waste container is below the requirement for shielding:

   (a) **DOUBLE BAG** the waste out of the hood.

   (b) **PERFORM** the appropriate contamination checks.

b. **PREPARE** the appropriate shielding for the bottle on the sample transport cart.

c. **PLACE** the bottle on sample transport cart.

d. **REQUEST** RCT to perform dose rate.

1. **IF** contact dose rate is < 500 mrem/hr. shallow, **REQUEST** RCT to FILL OUT and ATTACH a Pour Label (see Appendix I).

2. **IF** contact dose rate is ≥ 500 mrem/hr. shallow, **REQUEST** RCT to FILL OUT and ATTACH a Slurp Label (see Appendix I).

NOTES

- Movement of hazardous waste bottles from one SAA to another SAA is prohibited. Hazardous waste may go from SAA to 90-day accumulation or TSD.
- If waste is designated for lab pack, dose rate must be < 200 mR/hr at contact, window closed uncorrected.

e. **TRANSPORT** sample transport cart to the designated area for transfer to a TSD.

8.4.9 **PREPARE** all other collection bottles for entry into the CDRD.

a. **OBTAIN** an approximate waste container dose rate from RCT.

1. **OBTAIN** dose rate while bottle is in the hood if there is low/no background interference.

2. **SHIELD** container if above 200mR/hr window closed uncorrected.

   - Rubber shielding should be used preferentially over lead as shielding if possible.

3. **RETURN** the bottle to the SAA when complete.

b. **OBTAIN** waste barcode labels from Hazardous Material Control (HMC).

- CITS barcode labels are not to be used for waste.

c. **PLACE** a unique bar code number on each waste container.

d. **COMPLETE** a CDR as stated in section 19.0.

1. **RECORD** the bar code number on the container CDR form as the container ID number.

NOTES

- All labeling must be visible through the outer bag(s) placed on labpack bottles.
- Waste Container Inventory Sheet (if applicable) must accompany the appropriate waste container when it is moved or stored.

8.4.10 **IF** waste is suspect PCB or known PCB waste, **MANAGE** in accordance with section 16.0.

8.5 Secondary Containment Labeling After Removing Waste Container

8.5.1 **CHOOSE** one of the following options for labels on an empty secondary containment container:

a. **DEFACE** the label(s).

b. **MARK** containment container "Staged for Future Use."

9.0 WASTE FROM UNUSED AND/OR EXPIRED CHEMICALS

NOTES

- Whether managing solid chemical wastes as low-level radioactive (LLW) or hazardous/mixed waste, the miscellaneous section on the Waste Contents Sheet must have the constituents, procedure number, or test plan listed.
- Liquid waste may not be generated using a Waste Contents Sheet.
- Factory-sealed chemical containers should be radiologically free released if possible and managed by the responsible generator.
- Movement of hazardous waste bottles or containers from one SAA to another SAA is prohibited. Hazardous waste may go from SAA to 90-day accumulation area or a TSD area.

9.1 Managing Waste from Unused Chemicals Specified in a Procedure or Test Plan

9.1.1 **MANAGE** chemical wastes as designated by the Waste Stream Fact Sheet (WSFS).

a. **PREPARE** liquid waste that is approved for 219-S for transfer in accordance with subsection 8.4.8.

b. **MANAGE** hazardous/mixed and nonhazardous chemical wastes in accordance with section 9.2.

9.2 Unused Chemical Waste Collection and Management

9.2.1 **OBTAIN** an appropriate container, if required.

NOTES

- Chemical formulas are not acceptable to use for waste labeling. The chemical name (nomenclature) must be used.
- Consolidation of small containers containing liquid or solid waste into a large container to provide enough space to meet labeling requirements of waste management procedures is allowed.
- A combination label ("hazardous waste" and waste identification) can be used as long as all the information required below is included on the label.
- Do not conceal the manufacturer's chemical (major) risk information on the container.

9.2.2 **LABEL** waste or waste container with the following:

- A completed waste stream label obtained from the WSFS if available or label with a list of constituents. (This could be the manufacturer's label.)
- A hazardous waste label

a. **USE** a hazardous waste label unless the WSFS label or waste planning checklist state otherwise.

NOTE

For the initial labeling of waste, the major risk refers to the hazard risk to the handler. Waste Technical Services (WTS) determines the major risk for storage and packaging purposes.

- Major risk

b. **CONSULT** the responsible chemist if there is no applicable WSFS or waste planning checklist that identifies the major risk.

1. **USE** flammable, corrosive, reactive, or toxic as the major risk.
2. **USE** toxic if flammable, corrosive, or reactive is not the major risk.
3. **MARK** corrosive waste container with "acidic" or "basic" or pH range.

- Room number and hood number (if applicable).

9.2.3 **PLACE** chemical waste into container (if one is used).

9.2.4 **LEAVE** container in an approved SAA.

9.2.5 **CHECK** if the chemical is listed on the 222-S Expired Standards and Reagents to 291-S List (found on the 222-S Environmental web page).

a. **PREPARE** the waste for transfer in accordance with section 8.4.8

9.2.6 **SUBMIT** Container Disposal Request (CDR) for waste designation and waste disposal directions in accordance with section 19.0.

9.2.7 **NOTIFY** Standards Lab of CITS barcodes that were on containers before they were labeled waste.

- Notification can be by email or using the Disposition of Chemical Items form or instructions found in ATS-LO-150-063 or LO-100-063.

10.0 LOW-LEVEL RADIOACTIVE WASTE (LLW) INSTRUCTIONS

10.1 Room LLW Box Preparation

10.1.1 **OBTAIN** a box designed to be used for room LLW.

10.1.2 **ASSEMBLE** the box and tape the bottom seams with clear packaging tape to reinforce the box.

- Other types of tape (for example, duct tape or masking tape) are not acceptable to use for taping LLW boxes due to inability to adhere to cardboard for an extended period of time.

10.1.3 **PLACE** box into laboratory room or area for collection of waste.

10.1.4 **ATTACH** an LLW label in a visible location on the box.

10.1.5 **OBTAIN** a (4-mil minimum) clear plastic liner bag.

10.1.6 **INSPECT** liners for defects (punctures and tears).

10.1.7 **CHOOSE** a liner with no defects (punctures and tears)

10.1.8 **INSERT** liner(s) into box.

10.1.9 **FOLD** top of liner over the sides of the box.

10.1.10 **OBTAIN** a Waste Content Sheet (Appendix J) and **FILL OUT** while collecting LLW in the box.

10.1.11 **GIVE** each container a unique number if more than one room LLW box is going to be used in the room at a time.

10.1.12 **WRITE** the unique waste box number on the Waste Contents Sheet (if applicable).

10.1.13 **CHECK** LLW box on Waste Contents Sheet.

10.1.14 **DENOTE** room number, location, and container size.

10.1.15 **POST** Waste Contents Sheet in a visible location on or near the box.

10.2 Room LLW Box Collection and Management

NOTES

- Room waste is intended for collection of LLW waste without detectible contamination.
- Direct contamination of ≥ 20,000 dpm beta gamma is prohibited in room waste boxes.
- Approved contents for room waste boxes are paper, dry rags, gloves, clothing, plastic wraps, foam rubber, styrofoam, dry pens and markers, pencils, empty glass and plastic containers, stir bars, metal, hard plastic, rigid cardboard, wood, and other dry, low-density wastes. Dry, less-than-detectable smear media are acceptable for disposal to a room waste box.
- Prohibited wastes in room waste boxes include hazardous waste, radioactively contaminated articles (≥ 20,000 dpm beta gamma) including contaminated smear media, unidentified and uncharacterized wastes, free-standing liquids, infectious waste, transuranic (TRU) waste, alpha contaminated waste, lead, lead-containing products, and containerized liquid.
- LLW boxes in the corridor 8G step-off pad area are designated for masslinn cloth, disposable personal protection equipment (PPE), and tape only. These boxes do not require filling out a Waste Contents Sheet while collecting waste.

WARNING

Sharp objects and sharp edges must be padded and taped or packaged in a rigid container to prevent injury.

10.2.1 **COLLECT** low-level radioactive room waste in box.

a. **IF** sharp objects are collected in the box, **LABEL** the padded or packaged item with label stating "Caution Contains Sharp Objects" before placing it in the room box.

- Reinforced bags may be used to contain sharp waste

10.2.2 **FILL** out Waste Contents Sheet when collecting waste.

a. **ITEMIZE** all items placed in the waste container.

10.2.3 **CONTINUE** filling box until box is visibly full.

10.2.4 **CHANGE** out box of waste following subsection 10.3.

10.3 Room LLW Box Changeout

10.3.1 **SECURE** inner liner with tape.

10.3.2 **CLOSE** box flaps and secure with clear packaging tape.

10.3.3 **COMPLETE** Waste Contents Sheet as follows:

a. **RECORD** size of container in gallons.

NOTE

Percentages of waste include the container, items inside the container, sorbent, tape, and bags. The percentages are based on volume.

b. **RECORD** percentages of waste to equal 100 percent.

c. **RECORD** location.

d. **RECORD** the date.

e. **PRINT** your name.

10.3.4 **REQUEST** RCT to perform dose rate, contamination survey, fill out, and attach Radioactive Material (RAM) tag (Appendix H) before transferring to designated storage area.

10.3.5 **DOUBLE BAG** any box that is found with removable contamination.

a. **NOTIFY** immediate manager, FOM, and HMC of removable contamination of ≥ 20,000 dpm beta gamma is found.

b. **SEGREGATE** contaminated waste in accordance with subsection 10.5.

10.3.6 **WEIGH** box.

10.3.7 **RECORD** total weight in kg on Waste Contents Sheet.

10.3.8 **ATTACH** Waste Contents Sheet to box.

10.3.9 **TRANSFER** box to designated storage area.

10.4 LLW Container Preparation

NOTE

- Low-level radioactive waste generated from activities in a hood, maintenance activities, or construction activities must meet the requirements of this section.
- Rigid cardboard, metal cans, empty glass, and plastic containers with no free liquids can be managed as LLW waste. Exceptions are discussed in section 11.0, "Empty Container Instructions."

10.4.1 **OBTAIN** appropriate container for collection of LLW waste.

10.4.2 **LABEL** side and top of the container "Low Level Radioactive Waste" (Appendix M).

a. **MARK** the waste container with blue tape for known alpha waste.

10.4.3 **WRITE** room number and hood number or location on the LLW labels.

10.4.4 **OBTAIN** a Waste Contents Sheet and fill out while collecting LLW (Appendix J).

a. **GIVE** each container and Waste Contents Sheet a unique number when more than one LLW container is used in the same area.

b. **MARK** waste contents sheet with blue tape for known alpha and/or appropriate PCB label, if applicable, for hood waste only.

c. **DENOTE** room number, location, and container size.

d. **MARK** LLW checkbox on the waste contents sheet.

e. **POST** Waste Contents Sheet in a visible location near the container.

10.4.5 **ADD** a volume of approved sorbent equal to twice the volume of liquid to be sorbed, as a minimum, to a waste container that has residual liquids to ensure the residue is sorbed.

- Sorbent such as Imbiber beads is used for residual organic liquids.
- Sorbent such as Waterworks SP-400 is used for residual aqueous liquids.

10.4.6 **PLACE** prepared container into area for waste collection and **ENSURE** LLW marking is visible.

10.4.7 **PERFORM** the following additional labeling instructions for PCB–contacted LLW.

a. **IF** SUSPECT PCB, **SEE** sections 16.0.

b. **IF** waste to be collected has contacted Toxic Substances Control Act (TSCA) regulated for PCB waste, **SEE** section 16.0.

10.5 LLW Container Collection and Management

NOTES

- LLW wastes are not combined with hazardous wastes or mixed wastes. Mixing waste in this manner will be in violation of state and/or federal regulations.
- Free liquids are not allowed in LLW containers. Any bottles or vials that have held free liquids shall have an approved sorbent placed in them if they are not dry. Sorbents approved for use at the laboratories include, but are not limited to, Imbiber beads for organic waste and Waterworks SP-400 for aqueous waste.
- Additional instruction for counting room disks, planchets, and other dried mounts is covered in LO-100-169.

10.5.1 **CONTACT** HMC for guidance before packaging waste items too large to fit into a standard collection container (55-gal. drum).

10.5.2 **COLLECT** LLW in the container.

- Reinforced bags may be used to contain sharp waste.

WARNING

Sharp objects and sharp edges must be padded and taped or packaged in a rigid container to prevent injury.

10.5.3 **LABEL** "caution sharp objects" when container contains sharp objects.

10.5.4 **NOTIFY** the Standards Laboratory of empty container(s) placed in LLW that have a Chemical Management System (CMS) barcode (see Section 11.0).

10.5.5 **PLACE** only empty and nonhazardous items into the waste container.

10.5.6 **REMOVE** caps from containers before placing in waste container.

10.5.7 **CONTACT** HMC if an approved sorbent is not available.

10.5.8 **FILL** out Waste Contents Sheet when collecting waste.

a. **ITEMIZE** all items placed in the waste container.

b. **CLOSE** the LLW container when not actively adding waste.

10.5.9 **WHEN** waste container is full or removed from service, **ENSURE** waste is in double containment and that outer containment has no detectable removable contamination.

10.5.10 Prior to moving waste from room, **REQUEST** RCT to perform dose rate, contamination survey, and fill out and **ATTACH** RAM tag (see Appendix H).

a. **IF** readings are greater than 200 mR/hr at contact window closed (uncorrected), **APPLY** shielding to the waste container to make the dose rate less than 200 mR/hr at contact window closed (uncorrected).

- Rubber shielding should be used preferentially over lead as shielding if possible.
- If readings are less than 200 mR/hr at contact, window closed (uncorrected) shielding may be applied to the waste container for as low as reasonably achievable (ALARA) and waste packaging purposes.

b. **IF** lead shielding is used, **MARK** the container with the words "Lead as Shielding." The container must be managed as hazardous/mixed waste.

c. **RECORD** the type, thickness, and approximate length of shielding placed around the container on the Waste Contents Sheet.

10.5.11 **COMPLETE** Waste Contents Sheet as follows:

a. **RECORD** size of container in gallons.

NOTE

Percentages of waste include the container, items inside the container, void space filler, sorbent, tape, and bags. The percentages are based on volume.

b. **RECORD** percentages of waste to equal 100 percent.

c. **RECORD** location (e.g., room and hood numbers).

d. **RECORD** the date.

e. **PRINT** your name.

10.5.12 **ATTACH** Waste Contents Sheet to outside bag.

10.5.13 **ENSURE** RAM tag is attached to the container's outermost bag before transporting.

10.5.14 **TRANSPORT** the container to LLW storage area.

11.0 EMPTY CONTAINER INSTRUCTIONS

NOTE

- A container is considered empty and nonhazardous when all wastes in it have been taken out that can be removed using commonly employed practices. The container must not contain visible residue or free-flowing liquids.
- Section 16.2.2 describes the management of empty containers that contacted PCBs.

11.1 Empty Containers with Chemical Inventory Tracking System (CITS) barcodes

11.1.1 **NOTIFY** Standards Lab of the barcode number by email or using the Disposition of Chemical Items form or instructions found in ATS-LO-150-063 or LO-100-063.

11.1.2 **MANAGE** the empty container as stated in Sections 11.2 and 11.3.

11.2 Empty Containers as Hazardous Waste

11.2.1 **MANAGE** empty containers as hazardous waste if the previous contents of the container would be designated or categorized has any of the following:

- P waste code(s)
- WT01 waste code(s)
- Pesticides bearing the danger or warning label
- Acutely hazardous waste

11.3 Empty Containers as Nonhazardous Waste

11.3.1 **MANAGE** empty nonhazardous containers as LLW if they contained nonhazardous materials.

11.3.2 **MANAGE** all other empty hazardous waste containers (that do not meet the requirements in section 11.2.1) as LLW.

12.0 HOT CELL WASTE COLLECTION AND MANAGEMENT

NOTE

- Waste packages reading ≥ 200 mR/hr at contact window closed uncorrected in the airlock must be returned to the cubicle for rework or shielded to < 200 mR/hr at contact, window closed uncorrected.
- Refer to ATS-LO-100-107 for hot cell sample transfer to 219-S and waste/equipment load out/packaging.

12.1 Load in/out

12.1.1 **LOAD IN/OUT** sample/equipment/waste containers according to the following cubicle operating procedures:

- ATS-LO-100-110
- LO-100-110
- LO-161-172, *Perform Complex 11A Hot Cell Operation*
- ATS-LO-161-172, *222-S Laboratory Perform Complex 11A Hot Cell Operation.*

13.0 LEAD WASTE (WASTE CODE D008) AND RECYCLE INSTRUCTIONS

NOTE

- Improper disposal of lead is a violation of state and federal regulations. Both lead debris and lead solids may be collected together as hazardous/mixed waste.
- Improper management of lead can result in the sorting and repackaging of the container.

13.1 Determination of Lead Type

13.1.1 **DETERMINE** the form of lead.

- Lead debris (e.g., tape, lead-lined gloves, fuses, lead contacts on light bulbs)
- Lead solids (e.g., lead bricks, lead sheets, leaded carriers, leaded glass)

13.2 Preparation of Lead Solids for Recycle

13.2.1 **CONTACT** HMC for determination if lead is eligible for recycle.

13.2.2 **COORDINATE** with HMC for collection of lead that is eligible for recycle.

13.3 Managing Nonrecyclable Lead Waste

13.3.1 **MANAGE** lead solids/debris that are not eligible for recycle as hazardous/mixed waste (see section 8.2).

14.0 RECYCLABLE MATERIAL

NOTE

Recyclable materials are packaged in accordance with HNF-EP-0863.

14.1 Management of Recyclable Material

14.1.1 **DETERMINE** recyclable material and appropriate container.

- Waste Planning Checklist or HMC may be used to obtain this information.

14.1.2 **COMPLETE** a Radiological Evaluation for Release Form (A-6004-227) for all recyclable materials.

14.1.3 **ATTACH** a copy of the radiological survey report number (get number from Radiological Control) when item is released from a radiological zone.

14.1.4 **CONTACT** HMC for pickup and any further instruction.

15.0 EXCESSING EQUIPMENT AS WASTE

NOTE

Each piece of equipment must be evaluated by HMC to determine if there are any fuses, free liquids (such as oil), old sample vials, circuit boards, or other hazardous materials present.

15.1 Excessing

15.1.1 **NOTIFY** material coordinator of equipment for excess.

15.1.2 **PROVIDE** material coordinator with information requested for the Declaration of Excess form.

16.0 PCB INSTRUCTIONS

NOTES

- Sections, or steps within sections, of this procedure may be performed out of sequence, as required.
- A flow chart describing the management of PCB waste may be seen in Appendix N.
- The PCB concentration of the waste at the time of disposal determines Toxic Substance Control Act (TSCA) management of the waste.
- Aggregation of waste is allowed in order to determine PCB concentration.

16.1 Facility PCB Signage

16.1.1 **MARK** lab room where PCB samples and/or waste are stored with the M_L marking (Appendix E).

NOTES

- While in the laboratory, all PCB materials will have the status of being an "in use" material or given a "removed from service date' (see Appendix A for definitions). Following analysis, PCB samples archived and awaiting compliance information (such as PCB results) will still be considered "in use" until declared "PCB waste" and moved to storage for disposal or confirmed to be nonregulated for PCBs and disposed of appropriately.
- The OmniLIMS waste information batch sheet, sample analysis, travelers, or other direction for sample analysis should be marked clearly with an M_S or M_L mark or "SUSPECT PCB" so that the PCB wastes can be segregated from other wastes accordingly.
- The project coordinator/project manager or designee is responsible for gathering sample information such as PCB and other listed waste codes for entry into LABCORE
- If the sample is known TSCA regulated for PCB, the OmniLIMS waste information batch sheet shall indicate that the sample contains PCB, and the sample will be labeled as such
- Wastes and/or containers that have contacted $\geq$ 500 ppm PCB must not be combined with non-PCB or PCB < 500 ppm waste containers.

16.2 Analytical Waste

16.2.1 PCB Status for Sample or Sample-Contacted Waste

a. **DETERMINE** the TSCA-regulated PCB status for each sample to be analyzed as one of the following:

- OmniLIMS waste information batch sheet may be used to obtain this information

1. Not TSCA regulated for PCBs

   - OMNILIMS waste information batch sheet will not indicate a PCB status.

   - The procedure WSFS will state if specific organic liquid waste generated during PCB analysis may be exempted from TSCA regulations regardless of TSCA status of the sample.

2. Unknown or Suspect PCBs

   - OmniLIMS waste information batch sheet will state "Unknown PCB."

3. Known PCBs or TSCA regulated for PCBs

   - OmniLIMS waste information batch sheet will state the PCB concentration or that it is TSCA regulated for PCBs.

NOTE

If OmniLIMS waste information batch sheets are marked TSCA regulated for PCBs, then multiple projects may be collected in the same bottle.

16.2.2 **EMPTY** container waste

a. **SEGREGATE** waste from other solid debris or hazardous mixed waste.

b. **COLLECT** in an LLW container.

- Empty container(s) that has contacted TSCA analytical waste < 50 ppm PCB.

- Empty container(s) has contacted suspect PCB waste from aqueous streams (the container is by definition < 50 ppm PCB and includes analytical preps).

c. **COLLECT** in LLW container bearing a yellow and black M_s ("Caution Contains PCB") mark (see Appendix E).

- Empty container(s) that has contacted TSCA analytical waste and > 50 ppm PCB.

d. **SUBMIT** CDR forms (see Section 19.0) when container is full or no longer needed.

16.2.3 Debris (solid) waste

a. **COLLECT** as LLW.

- Item is not stained or discolored.
- Item has come into contact with < 50 ppm PCB.
  - PPE or towels generated during analysis are examples of types of items.

b. **COLLECT** in a LLW container bearing a yellow and black M_s ("Caution Contains PCB") mark (see Appendix E).

- Item(s) stained or discolored and > 50 ppm

16.2.4 Aqueous waste approved for 219-S

- No PCB labeling or segregation of waste due to PCB status required.
- Based on the solubility of PCBs in aqueous solutions, PCB concentration cannot exceed 49 ppm.

16.2.5 Known PCBs or TSCA regulated for PCBs

a. **LABEL** the container with M_S mark, project name, and group number.

b. **INITIATE** a CDR.

- Organic waste may be analyzed for PCB content, or use "worst-case" analytical result and indicate level on CDR.

16.2.6 Unknown or Suspect PCB

a. **PLACE** a white and red "SUSPECT PCB" label on the container. This applies to liquid organic, liquid aqueous not approved to 219-S, and solid waste.

b. **LABEL** with project name and group number.

c. **SEGREGATE** all generated wastes from non-PCB-containing waste until PCB analyses have been completed, and manage the waste appropriately.

d. **CHANGE** the status of Suspect PCB samples and associated wastes as follows:

1. **CHANGE** or **DEFACE** the label if analytical results verified that the waste is "Not Regulated for PCBs" (see Appendix L).

e. **LABEL** with M_S mark (see Appendix E) for analytical results that verified that the samples are TSCA regulated for PCBs.

f. (Project Coordinator/Project Manager) **DOCUMENT** the revised status in the daily operating instruction (DOI) and in LABCORE.

16.3 Decontamination of Equipment in Order to Exit TSCA Regulation

NOTE

Decontamination of containers and equipment is allowed under 40 CFR 761.79. Any material that contacted the PCB sample becomes PCB waste at the concentration of the original sample unless the equipment can be decontaminated using the triple-rinse technique with the appropriate solvent for the decontamination of the equipment.

16.3.1 **CONTACT** Environmental for direction before initiating any decontamination activities designed to exit the container or equipment from being regulated under TSCA.

17.0 MAINTENANCE WASTE INSTRUCTIONS

17.1 Maintenance/Work Control Waste-Generating Activities

NOTES

- Maintenance/Work Control waste handling and management is planned during the work package preparation.
- The work planning process includes generating a waste planning checklist.
- Maintenance/Work Control activities that generate waste within the 222-S laboratory must be managed in accordance with the appropriate sections of this procedure.
- If approved for transfer to 219-S, analytical manager and FOM approval are needed prior to transferring.
- Maintenance/Work Control waste cannot be moved from one SAA to another SAA (e.g., manipulator shop waste can only be moved to a 90-day accumulation area or TSD).

17.1.1 **IF** the waste is to be transferred to 219-S, **COORDINATE** job with scheduled transfer times to 219-S.

17.1.2 **IF** the waste is not to be transferred to 219-S, **MANAGE** waste in accordance with the waste planning checklist.

18.0 RADIOACTIVE CONTAMINATED RAGS INSTRUCTIONS

18.1 Radioactive Contaminated Acid/Caustic Rags

18.1.1 **RINSE** radioactive contaminated acid/caustic rags in water and **DRY**.

18.1.2 **MANAGE** rags as LLW.

18.1.3 **MANAGE** rinsate as hazardous/mixed waste if it exhibits the characteristic of corrosivity (for example, if pH is less than 2 or greater than 12.5).

- ATS-LO-190-101 and LO-190-101 discuss rinsing of acid rags at 2B, Hood 16.

19.0 CONTAINER DISPOSAL REQUEST (CDR) INSTRUCTIONS

NOTE

- The CDR form is used to request disposal designation information for liquid or solid chemical waste not predesignated for the 219-S system
- Waste described on CDR forms may be designated to the 219-S system and added to the approved 219-S list.
- Contact Waste Technical Services (WTS) for access and training to the Container Disposal Request Database (CDRD)

19.1 Completing the CDR form

19.1.1 **FOLLOW** instructions in ATS-GD-1027.

19.1.2 **COMPLETE** the applicable sections of the CDR form in the CDRD.

19.1.3 **CONTACT** the responsible chemist with questions concerning the information to enter into the CDR.

19.1.4 **SAVE** the form in the CDRD.

19.1.5 **LABEL** the waste with the CDR number and date the CDR was submitted.

19.2 219-S Transfer Status from CDRD

19.2.1 **ACCESS** the CDRD.

19.2.2 **SELECT** "View my entered CDRs."

19.2.3 **FIND** generator's name by paging through the tables.

19.2.4 **CHOOSE** (arrow in far left column) the container (CDR) number of interest.

19.2.5 **CHOOSE** "Designation Status."

19.2.6 **CHECK** for completion of the Designator and Designation Date Fields.

19.2.7 **LOOK** for a checkmark in the "Approved to 219-S" box and a 219-S approval letter number listed in the ECO field.

- A filled box designates that the waste is not approved for 219-S.

19.2.8 **OBTAIN** a copy of the 219-S approval letter and attachment from 222-S Environmental.

- The letter may be accessed from the 222-S Environmental web page or by contacting 222-S Environmental.

19.2.9 **REQUEST** RCT support to dose rate and label waste for slurp or pour (see subsections 8.4.8).

19.2.10 **PROVIDE** the 219-S approval letter and attachment to the slurp and pour assigned analytical manager or designee (see LO-100-171).

19.2.11 **TRANSFER** to the 219-S system (see Section 8.4.8)

19.3 Waste Collection Status from CDRD

19.3.1 **ACCESS** the CDRD.

19.3.2 **SELECT** "View my entered CDRs."

19.3.3 **FIND** generator's name by paging through the tables.

19.3.4 **CHOOSE** (arrow in far left column) the container (CDR) number of interest.

19.3.5 **CHOOSE** "Designation Status."

19.3.6 **LOOK** at the "Disposition Date" field.

- This field contains the date that the waste was picked up from the SAA. No date in this field denotes that the waste was not picked up.

20.0 RECORDS

NOTE

The Hanford Site remains under a full moratorium on the destruction of record material until further notice.

Record Description	Vital Record Y/N	QA Record Y/N	QA Record Retention L/NP	NARA Retention Schedule	Other Retention Requirements	Records Custodian
No records are generated by this procedure.	NA	NA	NA	NA	NA	NA

21.0 BIBLIOGRAPHY

49 CFR, *Transportation*

ATS-310, *222-S Laboratory Administration*, Section 4.5, "The 222-S Chemical Hygiene Plan"

ATS-310, Section 6.2, "Management of Gaseous Effluents"

ATS-310, Section 6.4, "222-S Laboratory Complex Waste Management Program"

ERP-222S-009, *Spill/Release/Continuous Air Monitor Alarm*

HNF-5183, *Tank Farm Radiological Control Manual*

HNF-MP-5184, *Radiation Protection Program*

ATS-LO-161-146, *222-S Laboratory Inspection, Survey, and Control of HEPA Vacuum Cleaners*

WAC 173-303, *Washington Administrative Code,* as amended

Appendix A. Definitions

Container. Any portable device in which a material is stored, transported, treated, disposed of, or otherwise handled. [WAC 173-303-040]

Customer. The organization that submits samples for analysis.

Generator. Any person, by site, whose act or process produces dangerous waste or whose act causes a dangerous waste to become subject to regulation. [WAC 173-303-040]

In-Use. Refers to samples that are still in the analysis process or still have potential future use. Samples are in use until no viable reason to maintain them at 222-S exists. At this point, they must be declared waste, and all sample exemptions are no longer applicable.

M_L Mark. Refers to the large PCB marking used to identify PCB storage areas (i.e., lab rooms where PCB-containing samples are analyzed). This mark should also be placed on large PCB containers such as drums.

M_S Mark. Refers to the small PCB mark used to identify TSCA-regulated PCB articles/items where the M_L is too large to fit.

Nonanalytical Waste. Waste produced from activities not associated with analyses (e.g., construction, maintenance, office refuse).

PCB Analytical Waste. Analytical wastes include, but are not limited to, wastes generated during sample preparation, sample extraction, addition of PCB standards, rinsates, sample digests, extract cleanup waste, extract concentrations, and wastes generated from radiochemical analyses and radiological measurements.

PCB/Radioactive Waste. PCB waste mixed with radioactive constituents.

PCB Container. Any package, can, bottle, bag, barrel, drum, tank, or other device that contains PCB or PCB articles and whose surface(s) has been in direct contact with PCB. [Adapted from 40 CFR 761.3]

PCB Waste. Those PCBs and PCB items that are subject to the disposal requirements of 40 CFR 761 Subpart D. [Adapted from 40 CFR 761.3]

PCB Article. Any manufactured article, other than a PCB container, that contains PCBs and the surface(s) of which has been in direct contact with PCB. PCB articles include capacitors, transformers, electric motors, pumps, pipes, and any other manufactured item (1) which is formed to a specific shape or design during manufacture, (2) which has end-use function(s) dependent in whole or in part upon its shape or design during end use, and (3) which has either no change of chemical composition during its end use or only those changes of composition that have no commercial purpose separate from that of the PCB article. [Adapted from 40 CFR 761.3]

PCBs (polychlorinated biphenyls). A group of toxic, persistent chemicals used in transformers, capacitors, and other electrical devices for insulation. PCBs were banned from sale in the U.S. in 1974. PCBs are any chemical substance that is a biphenyl molecule and has been chlorinated to varying degrees or any combination of substances, which contains such substance. Refer to 40 CFR 761.1(b) for applicable concentrations of PCB. PCB and PCB as contained in PCB items are defined in 40 CFR 761.3. [Adapted from 40 CFR 761.3]

PCB Remediation Waste. PCB remediation waste is soil, rags, personal protective equipment (PPE), and other debris generated as a result of any PCB spill cleanup or other unauthorized disposal.

Process Residue. Material generated during the course of the analytical process is called process residue.

Regulated PCBs. Samples or wastes identified with the M_L or M_S mark that meet the following conditions.

- PCB concentration > 50 ppm (Toxic Substances Control Act [TSCA] regulated), or
- PCBs detected by analysis at concentration < 50 ppm, AND the original sample matrix (origin of sample) was classified as TSCA regulated for PCBs, or
- With a PCB concentration ≥ 2 ppm, but < 50 ppm if the source of the PCBs is from electrical equipment (i.e., transformers, capacitors, or bushings) (Washington State regulated)

Remove From Service Date. The date a PCB item is removed from service for disposal. This date is the start of the storage for disposal period. For analytical waste, this is the date when the container in the process area is removed from the process area for disposal.

Process Area. Any areas where sample preparation, chemical analysis, and other analytical processes take place. Examples include fume hoods, hot cells, bench tops, and the standards laboratory.

Spill. TSCA defines a spill as both intentional and unintentional spills, leaks, and other uncontrolled discharges where the release results in any quantity of PCBs running off or about to run off the external surface of the equipment or other PCB source, as well as the contamination resulting from those releases (40 CFR 761.123). 222-S defines a spills or release of PCB material or waste as any unintentional or intentional discharge to any area other than a fume hood. Fume hoods meet the definition of "external surfaces of equipment" or "other PCB source" as defined in 40 CFR 761.123.

Storage for Disposal. Storage for disposal areas must meet specific containment and design requirements identified in 40 CFR 761.65(b)(1). Additional requirements include storage time limits, recordkeeping, inspections, and others identified in 40 CFR 761.65.

Suspect PCB. This term is NOT a regulatory definition and cannot be found in the TSCA or state regulations. "**Suspect PCB**" is a term used by 222-S to clearly identify samples and wastes that potentially contain regulated PCBs. Samples and wastes will be identified as "**Suspect PCB**" if the following conditions are met:

- If customer suspects that PCBs are present in the sample.
- If customer suspects that the sample may have originated in an area of remediation waste.

The status of "**Suspect PCB**" samples and associated waste will change dependent upon PCB analysis results and TSCA status of the original sample matrix.

Toxic Substances Control Act (TSCA). Congress enacted TSCA in 1976, to become effective January 1, 1977. The act authorizes U.S. Environmental Protection Agency (EPA) to secure information on all new and existing chemical substances and to control any of these substances determined to cause an unreasonable risk to public health or the environment. PCBs are regulated under TSCA.

Unused Samples. Samples that have not undergone any laboratory preparation or analyses. Unused samples have been completely unaltered and are in the same condition as originally supplied by the customer. Unused samples are also known as parent samples.

Waste Planning Checklist. Document used to identify wastes to be generated in the course of performing maintenance and construction activities. Waste management controls are also identified on this checklist.

Waste Stream. A process- or facility-generated waste or group of wastes with similar physical, chemical, or radiological properties.

Waste Generated Incidental to Analysis. Wastes, other than analytical process wastes, generated as a result of the performance of analytical procedures. Examples of these wastes are glassware, paper, and pipettes.

Appendix B. Examples of Hazardous Waste Label and Waste Stream Labels

HAZARDOUS WASTE

HANDLE WITH CARE
CONTAINS HAZARDOUS OR TOXIC WASTES

Procedure #	Room #	Hood #
Waste Stream Type:	WSFS of	Container Type:
Waste Codes:		Major Risk:

Disposal Path:

HAZARDOUS WASTE

[ ] Mark if waste has NOT been in contact with Tank Farm waste.

Example of Filled Out Waste Stream Label

LA-508-101	Room 4J	Hood 2
Aqueous (Acidic)	WSFS 1 of 1	Glass
Waste Codes: D002		Major Risk: Corrosive

Disposal Path: 219-S

HAZARDOUS WASTE

[ ] Mark if waste has NOT been in contact with Tank Farm waste.

Appendix C. Example of Container Inventory Sheet

CONTAINER TYPE_____ROOM#_____HOOD#_____

Chemical Compatibility Completed by:_____
(TECH AUTHORITY/COGNIZANT CHEMIST)

CONTAINER ID# (barcode_____

Work Instruction Number*	Constituents	Approximate Volume	Date	Initials	Tank Sample Y/N

*Work Instruction can be a procedure, test plan, method development, or work package

TECH AUTHORITY/COGNIZANT CHEMIST APPROVAL:

Disposal Information

DISPOSAL PERSON

DISPOSAL/COLLECTION

NAME: DISPOSAL DATE: AREA:

Appendix D. Example of "SUSPECTED PCBs" Label.

White Background with Red Border

CAUTION

SUSPECT PCBs

Project Name:_____

PENDING ANALYSIS

Appendix E. Example of "Caution" Label, M_S and M_L Mark

Yellow background with black border

CAUTION **CONTAINS PCBs (Polychlorinated Biphenyls) FOR PROPER DISPOSAL INFORMATION CONTACT U. S. ENVIRONMENTAL PROTECTION AGENCY**

M_S Mark

CAUTION

CONTAINS

PCBs

(Polychlorinated Biphenyls)

A toxic environmental containment requiring special handling and disposal in accordance with U.S. environmental Protection Agency Regulations 40 CFR 761. For Disposal Information contact the nearest U. S. E.P.A. Office.

In case of accident or spill, call toll free the U. S. Coast Guard National Response Center 800-424-8802..

Hanford patrol 911 or 373-3800
Utility Dispatch 373-2320 or 373-2321

M_L Mark

Appendix F. Example of Container Disposal Request (CDR) Entry Form in the CDRD

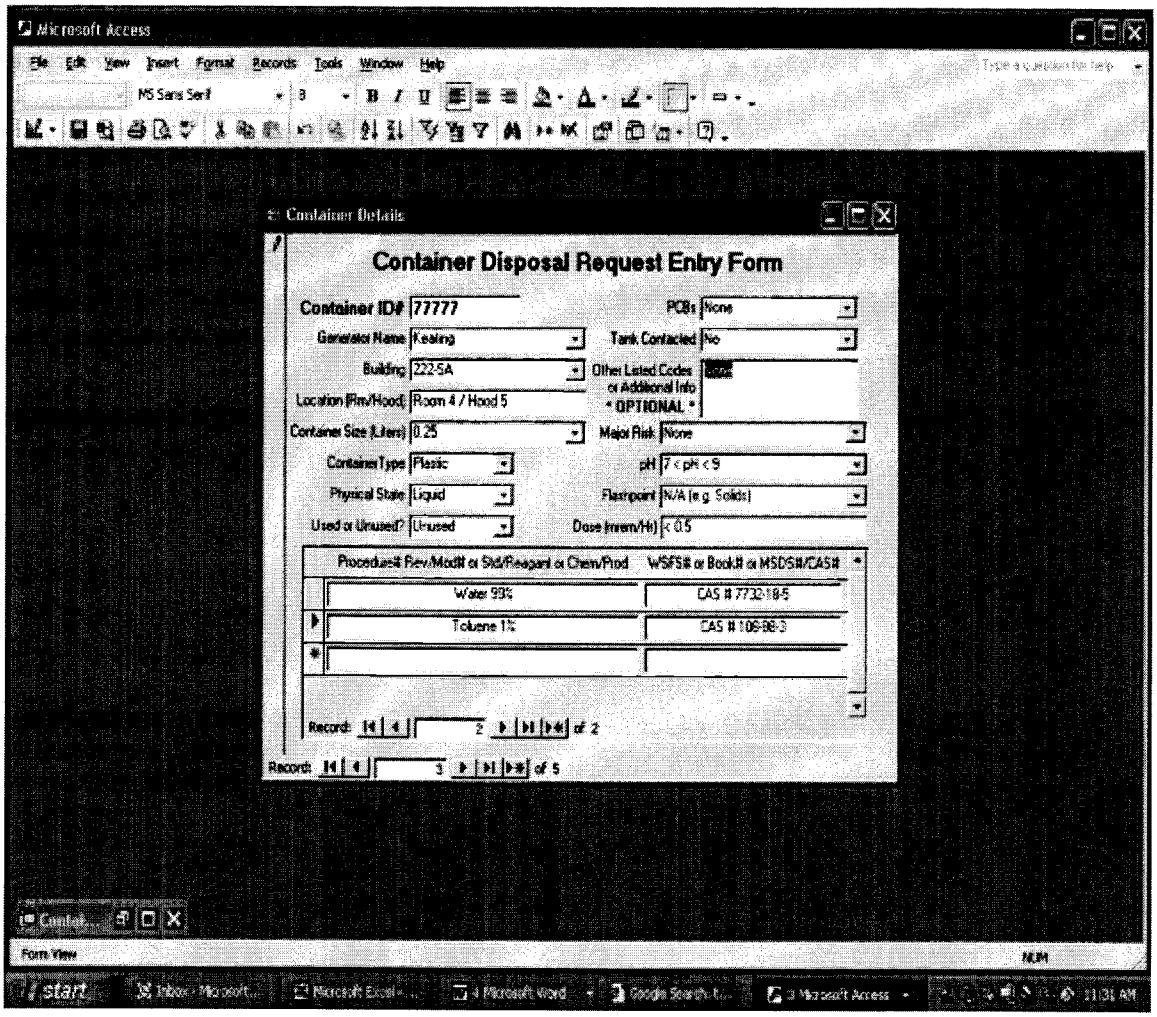

Appendix G. CDR Field Entry Requirements

The WRPS Container Disposal Request (CDR) form identifies the following fields to be entered into the CDRD:

Container ID# – Required Field that will not allow duplicate values to be entered

Generator Name – Required Field entered by selecting correct generator from pull-down menu

Building – Required Field entered by selecting correct building from pull-down menu

Location (Rm/Hood) – Required Field that must be manually entered (e.g. 4L / Hood 12)

Container Size (Liters) – Required Field entered by selecting correct size from pull-down menu or by manually entering correct size in Liters

Container Type – Required Field entered by selecting correct container category from pull-down menu

Physical State - Required Field entered by selecting correct physical state from pull-down menu

Used/Unused? - Required Field entered by selecting correct Used/Unused category from pull-down

PCBs - Required Field entered by selecting correct PCBs category from pull-down

Tank Contacted - Required Field entered by selecting correct tank contacted category from pull-down menu

Other Listed Codes or Additional Info (OPTIONAL) – This field should be entered if you can identify other listed waste codes or pertinent information to help the waste designator, or request that the waste be designated for the 219-S approval list.

Major Risk - Required Field entered by selecting correct major risk category from pull-down

pH - Required Field entered by selecting correct pH category from pull-down

Flashpoint - Required Field entered by selecting correct flashpoint category from pull-down

Actual Dose Rate (mrem/hr) - Required Field that must be entered (e.g. >5) in units of mrem/hr

Procedure # & Rev/Mod or Standard/Reagent or Chemical/Product Name or Parent Sample, WSFS# or Book#, or MSDS/CAS# or Parent Sample # - Required Field that must be manually entered one or more times. Continue to enter items into the table and they will all be captured according to the specific Container ID#

* NOTE – The CDRD requires you to complete all required fields for a complete record to be recorded.

If you don't complete all the required fields you may receive the following message:

> ***"You can't save this record at this time."***
>
> If you receive this message, close out the record and you will return back to the Main Switchboard Menu.

Appendix H. RAM Tag

Example of Caution Radioactive Material (RAM) Tag

Yellow background with Magenta Lettering

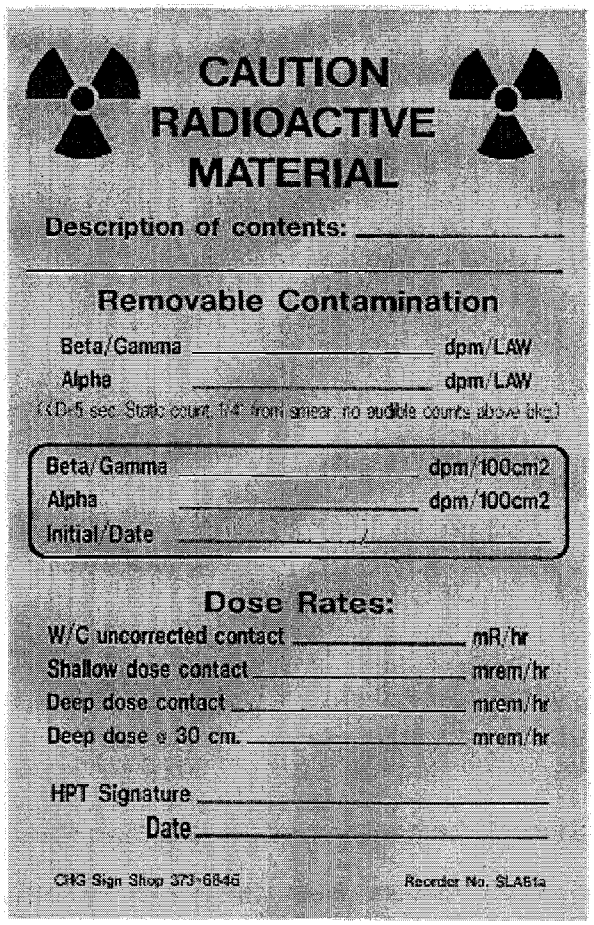

CAUTION
RADIOACTIVE
MATERIAL

Description of contents: _____

Removable Contamination

Beta/Gamma _____ dpm/LAW

Alpha _____ dpm/LAW

(<D+5 sec Static count, 1/4" from smear, no audible counts above bkg)

Beta/Gamma _____ dpm/100cm2

Alpha _____ dpm/100cm2

Initial/Date _____ / _____

Dose Rates:

W/C uncorrected contact _____ mR/hr

Shallow dose contact _____ mrem/hr

Deep dose contact _____ mrem/hr

Deep dose @ 30 cm. _____ mrem/hr

HPT Signature _____

Date _____

CHG Sign Shop 373-6846 Recorder No. SLA61a

Appendix I. Example of Slurp and Pour Labels for Liquid Waste

Orange with black lettering 3" x ¾"

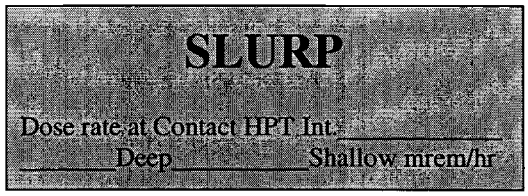

Green with black lettering 3" x ¾"

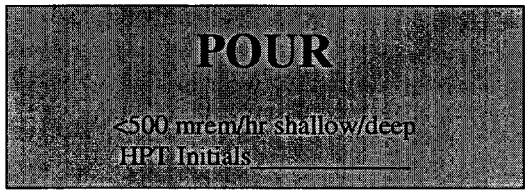

Appendix J. Example of Waste Contents Sheet

☐ Compactible ☐ Low-Level Rad.(no lead allowed) ☐ Mixed (F001-F005) ☐ Other Listed Waste__
☐ PCB (must be <0.5 mrem/hr)

ITEMS				Specify Misc. in Detail with Percentage	
Paper Towels/Tissues		Glass Ware/Vials/Pipets		Misc.	%
Rubber Matting		Planchets/AT/TB Discs			
Surgeons Glove		Tweezers/Scoops/Spatulas			
Plastic Bags		Lead Waste/Tape			
Poly Bottles/Tubes/Vials		Lead Shielding			
Poly Transfer Pipets		Diatomaceous Earth			
Vial Caps		Rad Sorb			
Eppendorf Tips		Imbiber Beads			

Percentages Include Entire Package and are Based on Volume

Paper	Rubber	Plastic*	Cloth**	Glass	Metal	**Lead Waste**	Rad Sorb	Imbiber Beads	Misc.

Size	Wt. Kg

Room _____ Hood No. _____ Date _____

Name (Print legibly) _____

* Universal Polypropylene is considered plastic.
** Masslin is considered cloth.

Appendix K. Example of 222-S Hazardous Mixed Waste Labels

(Pink background, black lettering)

HAZARDOUS WASTE

F-LISTED MIXED WASTE

ROOM NO._____HOOD NUMBER

_____

WASTE CODES: F001, F002, F003, F004, F005

TOXIC

Tank Farm Sample Only

(Periwinkle background, black lettering)

HAZARDOUS WASTE

MIXED WASTE

ROOM NO._____HOOD NO._____

WASTE CODES:_____

MAJOR RISK:_____

Major Risk is Toxic, Flammable, Corrosive, Oxidizer

Appendix L. Example of "PCB Analysis Results"

PCB
Analysis Results
VERIFY

Not Regulated for PCBs

Appendix M. Example of Low-Level Radioactive Waste Tag

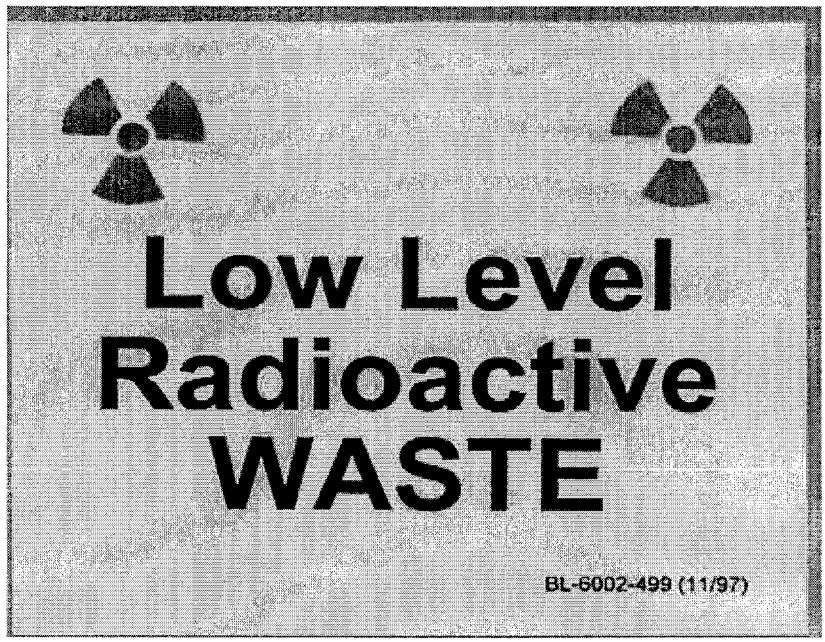

Appendix O. Flow Chart of the Management of PCB Analytical Wastes

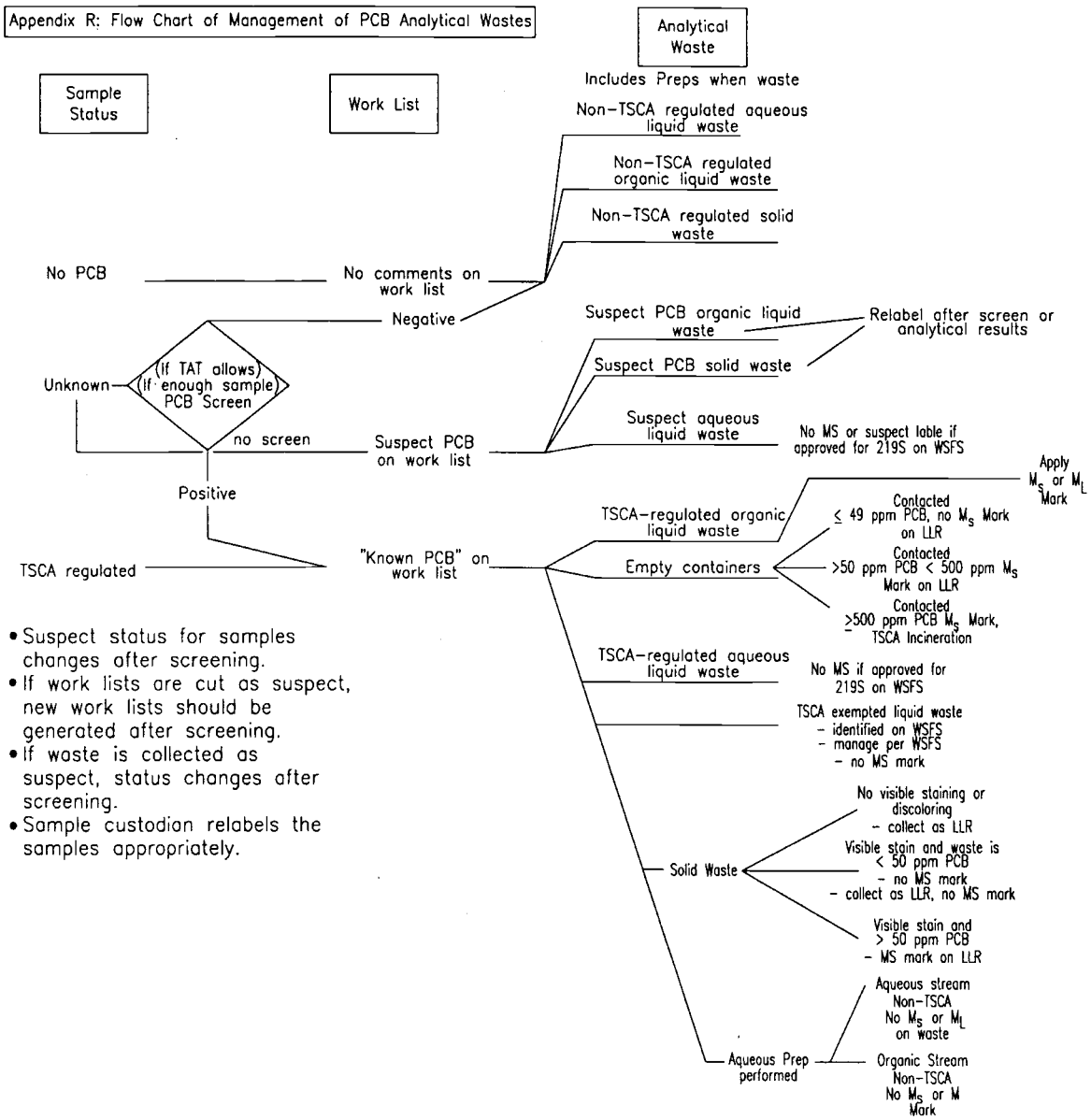

- Suspect status for samples changes after screening.
- If work lists are cut as suspect, new work lists should be generated after screening.
- If waste is collected as suspect, status changes after screening.
- Sample custodian relabels the samples appropriately.

Figure 1. Typical Waste Accumulation Bottle

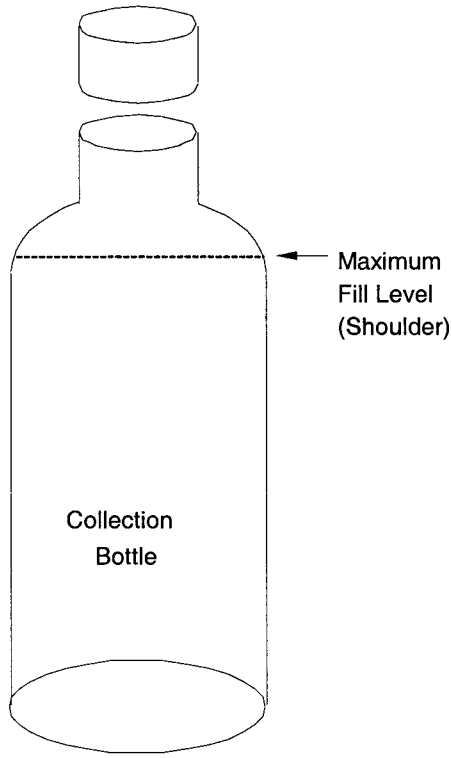

Message

From: White, Don (CH2M)
Sent: Tuesday, October 21, 2008 1:40 PM
To: Brown, Nancy L
Cc: Owen, Annette; Glaman, Linda; Alexander, Sandy K; Hardy, Don B
Subject: ATS PER Screening Information for WRPS-PER-2008-0076 (10-21-2008)

Nancy,

Sorry for being late on this PER. In fact, I am still waiting for any of three people to call me to tell me who owns this one. The good news is they are all in the same management chain. Below are the codes and significance level based on having talked to one of the three potential owners (and the most likely one).

Let me know if you have any questions; otherwise I will talk with you at 2:00. Thanks.

Don

PER Number:	**WRPS-PER-2008-0076**
PER Coding	**Suggested Codes**
Responsible Manager	J. A. Neilsen or C. E. Upchurch or C. Y. Lehmann
SMP Owner	N/A
Significance Level	PIE/CIM
Program/Project Code	Project: Waste Services Program: N/A
Functional Area Code	Waste Management
Work Process Code	Procedures: Analytical
ISMS Code	Identify and analyze hazards
Consequence Code	Waste Management-general
Were significance and trend codes discussed with the RM or a delegate?	Yes; discussed with Craig Upchurch on October 21, 2008
Refer issue to APC for review?	No
Refer issue to ALARA Committee for review?	No

Save

Problem Evaluation Request (PER)

WRPS-PER-2008-0077
In Process/Work

PER No	Date of Discovery	Time of Discovery (24:00)	Project
WRPS-PER-2008-0077	10/15/2008	09:00	Engineering

Location

AP Farm

How Was Problem Discovered

MOP

Description of Concern or Problem

OSD-T-151-0007 Rev.1 Table 1.1.1 does not clearly identify the maximum operating waste liquid level for each of the AP Farm tanks. This table sets the maximum operating level at 454 in. for all 8 AP Farm tanks with only a note stating :
"The original design limit for the AP farm tanks is 422 in. The tanks have been subsequently analyzed to a maximum fill level of 460 in. The normal operating limit may be increased above 422 in. up to a maximum of 458 inches for initial in-service leak tests and then controlled to a maximum operating level of 454 inches subject to the constraints and completion of the additional activities specified in RPP-19438, as applicable."
Only AP-108 has completed the the required actions to allow the maximum operating level to be increased to 454 in. Additionally, this completed action at AP-108 is not specifically identified, as would be appropriate.
Presently, AP tanks 101,102,104,105, 106 & 107 require the removal of PVC liners at the Enrafs and AP tanks 105 & 106 must have the vapor sample lines raised prior to performing the level-rise tests to allow raising levels above 422 in.

Requirement Not Satisfied	Source Document Number
	OSD-T-151-0007 Rev 1

Equipment Identification Number	System Identification
N/A	

Immediate actions Taken or Planned

Verified that the present levels in all AP Farm tanks are appropriate and conform to the intent of OSD-0007.
Discussed this with the BO Engineering Manager, BO Shift Operations Manager, BO Shift Manager, and the Engineer responsible for OSD-0007.
Sent a marked-up recommended change to the Engineer responsible for OSD-0007.

Recommended Corrective actions

1. Update OSD-0007 table 1.1.1 to show that only AP-108 has complete the actions to allow the the maximum liquid level to be 454 in. and show the remaining 7 tanks to be limited to 422 in.
2. Subsequent to OSD-0007's change, update TO-040-037 "Perform TMACS parameter Modification" High and High-High alarm setpoints and change the notes on page 4 of TF-OR-ER2-01-D (ER2 Daily Rounds)

Originator Contact

I would like to help define the problem

Originators Name	Originators ID	Originators Phone	Date Initiated
Schmorde, Fred	H0041993	(509) 373-2353	10/15/2008

SHIFT OPERATIONS REVIEW

Title

OSD-007 discrepancies

How Discovered	Agency
self-ID prior to event	

Reportability	SSC Operability	Operability Review	Comp Measures Req
Non-Reportable	N/A	N/A	

Describe actions Taken or Recommended

No additional actions taken or recommended by Base Ops SO

SO Reviewer Name	SO Reviewer ID	SO Reviewer Phone	SO Review Date
Strasser, David W	H0075556	(509) 373-2689	10/15/2008

SCREENING

PER Significance Level	
PIE/CIM	

Independent Assessment Review	Occurrence Report Number	Externally Identified	
No		No	
Assigned Responsible Manager	**Facilities Rep / SSO**	**Safety Management Rep**	
Washenfelder, Dennis J			
Program		**Safety Management Program**	
• N/A		• ^N/A^	

PER Screening Comments

cc: Eric Nelson (Nancy Brown 10/16/08)

Causal Code

MGT/Comm/Train	**Human Performance**	**GEMS**	**Equip/Eng/Other**
Failed Barrier	**ORPS Code**	**Functional Area**	**Work Process**
	Not Applicable	Engineering	• Assessments • Procedures: Preparation/Review
ISMS	**Consequence Code**		
Provide feedback and continuous improvement	• Procedure - Technical - Procedure ambiguous, in error, could not be worked, was not used		
PER Screening Chair	**PER Screening Chair ID**	**PER Screening Chair Phone**	**PER Screening Date**
Brown, Nancy L	H0088797	(509) 373-0992	10/16/2008

PAAA REVIEW

PAAA Screening	PAAA Codes	Function Codes	
PAAA, Non-NTS Reportable	• 10 CFR 830.122 (d) (1)	• Procedure Quality	
NTS Report Number	**NTS Report Date**		
Repetitive / Recurrent	**Programmatic**	**Intentional Violation / Misrepresentation**	
No	No	No	

PAAA Screening Comments

PAAA Reviewer Name	PAAA Review Date	
Anderson, Craig E	10/16/2008	
PAAA Approver Name	**PAAA Approve Date**	
Anderson, Craig E	10/27/2008	

SENIOR MANAGEMENT REVIEW/CONCURRENCE

TF Operations Morning Leadership Call

None. 10/20/08

Instructions for Responsible Manager

Evaluate suggestion, enter comments and required actions on PIE/CIM tab of the PER. Disposition in accordance with TFC-ESHQ-Q_C-C-01, Problem Evaluation Request.

Senior Management	Sr Mgmt ID	Sr Mgmt Phone	Sr Mgmt Review Date
Owen, Annette	H0054042	(509) 372-0533	10/20/2008

CAUSE ANALYSIS

Description of Occurrence

Extent of Condition

Safety Significance

Generic Implications

Remedial Corrective Action

Causal Analysis, Apparent Cause and/or Root Cause Analysis

CORRECTIVE ACTIONS

Actionee	Action Due Date	E-STARS Number
Rast, Rick	08/31/2009	WRPS-PER-2008-0077.1

Action

Update OSD-0007 as recommended.

Corrective Action Attachments

- ESTARS EXTENSION WRPS-PER-2008-0077 and WRPS-PER-2008-0077_1.msg
- Link to PER
- OSD 007 Liquid Levels.doc
- RE_ Transfer PER-2008-0077.msg
- RE_ Transfer PER-2008-0077.msg
- WRPS-PER-2008-0077 ESTARS EXTENSION REQUEST.msg
- WRPS-PER-2008-0077 EXTENSION REQUEST.msg

PIE/CIM

Evaluation of PIE/CIM Initiative

OSD-0007 will be updated as recommended.

ATTACHMENTS

Link to PER

OSD 007 Liquid Levels.doc

RE_ Transfer PER-2008-0077.msg

WRPS-PER-2008-0077 ESTARS EXTENSION REQUEST.msg

WRPS-PER-2008-0077 EXTENSION REQUEST.msg

AUDIT HISTORY

Change Date	Auditor	Comments
10/20/2008 07:55	Owen, Annette	Responsible Manager Task Launched by Owen, Annette
04/14/2009 11:16	Glaman, Linda R	'Screening Program' was changed. 'Screening Safety Managemnt Program' was changed.
04/14/2009 11:16	Glaman, Linda R	Corrective actions Launched by Glaman, Linda R
06/24/2009 15:26	Glaman, Linda R	Change to Cause Analysis screen/Corrective Action plan.
06/24/2009 15:28	Glaman, Linda R	transfer CA .1 from T Mackey to R Rast per attached email request. LBG Corrective Action Group The documentation update and follow-up actions required to address this PER are being performed by Dennis Washenfelders group. Based on today's conversations with Dennis, please transfer WRPS-PER-2008-0077 to Dennis Washenfelder. Thanks Tom Mackey 6-23-09
06/24/2009 15:30	Glaman, Linda R	'Assigned Responsible Manager' was transfered from T Mackey to D Washenfelder per attached email request. LBG 6-24-29

06/30/2009 08:56	Glaman, Linda R	Change to Cause Analysis screen/Corrective Action plan.
06/30/2009 08:57	Glaman, Linda R	extend CA .1 to 8-31-09 per attached email request. LBG Please extend the subject ESTARS Tasks to August 31, 2009. PER OWNER: Dennis Washenfelder Assigned: Richard Rast Closure for this PER is the releasing of the revised OSD-T-151-00007, which will be out for review soon and released mid-August. Once this work is done, there will be clarification to the liquid level specifications and the PER will be resolved. S Littlejohn for D Washenfelder 6-29-09

-- End of Report --
07/08/2009 08:09 AM

Task# WRPS-PER-2008-0077

E-STARS[R] Report
Task Detail Report
07/08/2009 0810

TASK INFORMATION			
Task#	WRPS-PER-2008-0077		
Subject	PIE; OSD-007 discrepancies		
Parent Task#		**Status**	Open
Reference		**Due**	09/13/2009
Originator	^PER Coordinator	**Priority**	Medium
Originator Phone		**Category**	PER
Origination Date	10/15/2008 0957	**Generic1**	None
Remote Task#		**Generic2**	None
Deliverable	PER Review	**Generic3**	None
Class	None	**View Permissions**	Global
Instructions	*No Instructions*		

ROUTING LISTS

1	Corrective actions Routing Lis	Active
	To launch Corrective actions.	
	• ^PER CAs - Assign - Awaiting Response - Due Date - 09/09/2009 0000 *Instructions:*	
2	Responsible Manager	Inactive
	Evaluate suggestion, enter comments and required actions on PIE/CIM tab of the PER. Disposition in accordance with TFC-ESHQ-Q_C-C-01, Problem Evaluation Request.	
	• Mackey, Tom - Assign - Completed with comments - 04/07/2009 0952 *Instructions:*	
	• Mackey, Tom - Assign - Completed - 04/07/2009 0952 *Instructions:* Did you contact the originator about the PER? Document your contact in the response window.	
3	Review Initial PER	Inactive
	Review New PER	
	• ^SO(Strasser, David W) - Review - Concur - 10/15/2008 1350 *Instructions:*	
	• ^PER Screening(Brown, Nancy L) - Review - Concur - 10/16/2008 1145 *Instructions:*	
	• ^Mgr Review(Owen, Annette) - Review - Concur - 10/20/2008 0755 *Instructions:*	

ATTACHMENTS

Attachments	1. Link to PER 2. OSD 007 Liquid Levels.doc 3. RE_ Transfer PER-2008-0077.msg 4. WRPS-PER-2008-0077 ESTARS EXTENSION REQUEST.msg 5. WRPS-PER-2008-0077 EXTENSION REQUEST.msg

COMMENTS

Poster	^PER Coordinator (Owen, Annette) - 12/11/2008 0943

Task# WRPS-PER-2008-0077

	Extend to 2/9/09 per attached e-mail request.
	WRPS-PER-2008-0077 needs more time to be evaluated to determine if this PER is assigned to the correct department.
Poster	^PER Coordinator (Owen, Annette) - 02/13/2009 0936
	Extend to 3/23/09 per attached e-mail request.
	Please extend the subject item to March 23, 2009. Higher priority issues have eliminated the opportunity to determine the correct action on this PER.
Poster	Mackey, Tom (Littlejohn, Sue M) - 04/07/2009 0952
	Completed
	Reviewed and action assigned.
Poster	^PER Coordinator (Glaman, Linda R) - 06/30/2009 0857
	Due Date Extension
	extend CA .1 to 8-31-09 per attached email request. LBG Please extend the subject ESTARS Tasks to August 31, 2009. PER OWNER: Dennis Washenfelder Assigned: Richard Rast Closure for this PER is the releasing of the revised OSD-T-151-00007, which will be out for review soon and released mid-August. Once this work is done, there will be clarification to the liquid level specifications and the PER will be resolved. S Littlejohn for D Washenfelder 6-29-09

TASK DUE DATE HISTORY

Modified	06/30/2009 0858 - ^PER Coordinator	**New Due Date**	09/13/2009 0000
Modified	04/14/2009 1116 - ^PER Coordinator	**New Due Date**	07/13/2009 0000
Modified	04/14/2009 1116 - ^PER Coordinator	**New Due Date**	07/09/2009 0000
Modified	02/13/2009 0936 - ^PER Coordinator (Owen, Annette)	**New Due Date**	03/23/2009 1630
Modified	12/11/2008 0942 - ^PER Coordinator (Owen, Annette)	**New Due Date**	02/09/2009 1630
Modified	10/20/2008 0755 - ^PER Coordinator	**New Due Date**	12/14/2008 1630
Modified	10/20/2008 0755 - ^PER Coordinator	**New Due Date**	12/14/2008 1630
Modified	10/15/2008 0957 - ^PER Coordinator	**New Due Date**	10/17/2008 1630

SUB TASK HISTORY

Subtask#	WRPS-PER-2008-0077.1				
Subject	WRPS-PER-2008-0077; PIE; Update OSD-0007 as recommended.				
Originator	^PER CAs				
	Routing List	Corrective Action			
		Assignee	Mackey, Tom	**Response**	Withdrawn
		Assignee	Rast, Rick	**Response**	
		Assignee	Washenfelder, Dennis J	**Response**	

-- end of report --

1.1 Liquid Levels

1.1.1 Maximum Primary Tank Waste Liquid Level

Tanks		Maximum Analyzed Limit	Normal Operating Limit	Maximum Operating Limit	Comments
AP 101 to 107		460 in	422 in	422 in.	See Note 3
AP 108		460 in	454	454	See Note 4
AN, SY, AW 101 and 103 to 106		422 in.	416 in.	422 in.	See Note 2
AW 102			409 in.	409 in.	The operating level is limited to allow for emergency dump of the evaporator
AY, AZ		370.75 in.	364 in	364 in.	

NOTE 1: Tank Waste Liquid Level is defined as the surface level irrespective of the amounts of sludge, supernatant, or solids/crust. ***Where is note 1 above? Delete this note?***

NOTE 2: The normal operating limit may be raised from 416 in. up to the maximum analyzed of 422 in. on a case-by-case basis by a process memo from Process/Waste Transfer Engineering.

NOTE 3: The original design limit for the AP farm tanks is 422 in. The tanks have been subsequently analyzed to a maximum fill level of 460 in. The normal operating limit may be increased above 422 in. up to a maximum of 458 inches for initial in-service leak tests and then controlled to a maximum operating level of 454 inches subject to the constraints and completion of the additional activities specified in RPP-19438, as applicable.

NOTE 4: In-service leak tests specified in RPP-19438 are complete.

Message

From: Littlejohn, Susan M

Sent: Thursday, December 11, 2008 9:37 AM

To: ^WRPS Corrective Action Group

Cc: Owen, Annette; Mackey, Thomas C

Subject: WRPS-PER-2008-0077 EXTENSION REQUEST

WRPS-PER-2008-0077 needs more time to be evaluated to determine if this PER is assigned to the correct department.

Extend WRPS-PER-2008-0077 to February 9, 2009.

Sue Littlejohn
Central Design Authority & Standards, WRPS
PH: 509-376-2931
CELL: 509-205-9426

43

Message

From: Littlejohn, Susan M

Sent: Friday, February 13, 2009 9:28 AM

To: ^WRPS Corrective Action Group

Cc: Owen, Annette; Mackey, Thomas C

Subject: WRPS-PER-2008-0077 ESTARS EXTENSION REQUEST

Please extend the subject item to March 23, 2009.

Higher priority issues have eliminated the opportunity to determine the correct action on this PER.

Sue Littlejohn
Central Design Authority & Standards, WRPS
PH: 509-376-2931
CELL: 509-205-9426

43

Message

From: Mackey, Thomas C
Sent: Wednesday, June 24, 2009 3:09 PM
To: ^WRPS Corrective Action Group
Cc: Nelson, Eric A; Washenfelder, Dennis J; Rast, Richard S; Mackey, Thomas C
Subject: RE: Transfer PER-2008-0077

Linda

I believe the actionee will be Richard Rast but Dennis can task that out when he has the PER.

Thanks
Tom

From: ^WRPS Corrective Action Group
Sent: Wednesday, June 24, 2009 3:06 PM
To: Mackey, Thomas C; ^WRPS Corrective Action Group
Cc: Nelson, Eric A; Washenfelder, Dennis J; Rast, Richard S
Subject: RE: Transfer PER-2008-0077
Importance: High

To verify, both the responsible manager role for the parent task and the actionee role for the corrective action are to be transferred from Tom Mackey to Dennis Washenfelder?

Thanks...As always, please call if you have questions

Linda RB Glaman
Operations Support Specialist/CAM
Turning 'round-n-'round downtown
539-2771
"The only stupid question is the one that remains unasked"

From: Mackey, Thomas C
Sent: Tuesday, June 23, 2009 3:37 PM
To: ^WRPS Corrective Action Group
Cc: Mackey, Thomas C; Nelson, Eric A; Washenfelder, Dennis J; Rast, Richard S
Subject: Transfer PER-2008-0077

Corrective Action Group

The documentation update and follow-up actions required to address this PER are being performed by Dennis Washenfelders group.
Based on today's conversations with Dennis, please transfer WRPS-PER-2008-0077 to Dennis Washenfelder.

Thanks
Tom

Save

Problem Evaluation Request (PER)

WRPS-PER-2008-0078
In Process/Work

PER No	Date of Discovery	Time of Discovery (24:00)	Project
WRPS-PER-2008-0078	10/14/2008	09:45	Radcon-BO

Location

SY Farm

How Was Problem Discovered

Radiological Surveys

Description of Concern or Problem

While performing TFC-W003 weekly radiological surveillance (contamination area perimeter survey) approximately 57 spots of transferable contaminated rabbit feces were discovered in an large uncontrolled area up to 60 feet from CA boundary. Activity found was direct and removable contamination. Removable contamination range was from 5000 to 600,000 dpm/ 100 cm2 beta gamma with no alpha contamination . Notifications were made and area was turned over to another company, Fluor operations, with the SPILL boundaries of the affected area still undetermined and the area left uncontrolled and unposted. I was informed the Environmental Rad Con group supervisor had not been notified and no resources were dispatched to establish the required control's.
Concern1: Contamination SPILL boundaries not identified.
Concern 2: No documented formal turnover process of pertinent data/information.
Concern 3: Inconsistencies between PHMC and Tank Farm Contractor in posting criteria (SCA) and protective clothing requirements.

REQUIREMENTS NOT SATISFIED:

1. HNF-5183 article 231 which states :Each access point to radiological areas and radioactive material areas (as defined in the Glossary of this Manual) shall [835.603] be posted with conspicuous signs bearing the wording provided in this section. [RPP # 134] Criteria used for radiological posting and labeling shall be consistent between Hanford Site contractors as members of the Hanford Site Radiological Control Forum.

2. HNF-5183 Article 235.1 which states: Areas shall [835.603(d-f)] be posted to alert personnel to contamination in accordance with Table 2-4 and Article 231. [RPP # 138-140].

3. HNF-5183 Article 335.1 which states: Minimum requirements for entry into Contamination Areas should include the following:
a. Radiological Worker II training (unescorted), GERT (with qualified escort);
b. Worker's signature on the RWP, as applicable;
c. Minimum requirements for unescorted entry into Contamination Areas also include the following:
1) Protective clothing, as required by the governing RWP;
2) Personnel dosimetry, as appropriate.

4. HNF-5183 article 346.6 which states:

a. Stop or secure the operation causing the spill;
b. Warn others in the area;
c. Isolate the spill area if possible;
d. Minimize individual exposure and contamination; e. Secure unfiltered ventilation; and f. Notify Radiological Control personnel.

5. HNF-5183 article 338.1 which states: Personnel should perform a whole body frisk immediately upon entry into an uncontaminated area after exiting Contamination Areas.

Requirement Not Satisfied	Source Document Number
See above in the concerns box.	
Equipment Identification Number	**System Identification**
N/A	

Immediate actions Taken or Planned

1. Notified RADCON management.
2. Guarded area until turned over to Fluor operations.
3. Base Ops Shift manager notified.
4. Made entry into RADCON logbook.
5. Issued RSR.
6. Issued PER.

Recommended Corrective actions

1. Follow all Articles and requirements listed above.
2. Identify source and eliminate it.
3. Continue to survey SPILL area untill a verified clean boundary is established prior to turnover to other company.
4. Develop a proceduralized turnover proccess between WRPS and Fluor (other company).
5. Ensure that posting criteria and protective clothing requirements are consistent between contractors (e.g. in Soil Contamination Areas anti-c required by one company and not the other).

Originator Contact

1. I would like to help define the problem. 2. I would like to help in investigating the cause. 3. I would like to review the the corrective actions at closure to ensure they were effective.

Originators Name	Originators ID	Originators Phone	Date Initiated
Cole, Ross V	H0070822	(509) 373-2526	10/15/2008

SHIFT OPERATIONS REVIEW

Title

Contaminated rabbit feces discovered in a large uncontrolled area up to 60 feet from CA boundary North of SY-farm

How Discovered	Agency
self-ID result of event	

Reportability	SSC Operability	Operability Review	Comp Measures Req
Non-Reportable	N/A	N/A	

Describe actions Taken or Recommended

Contacted Ray Johnson of Fluor Hanford to get resources for cleanup and to take care of reportability.

SO Reviewer Name	SO Reviewer ID	SO Reviewer Phone	SO Review Date
Strasser, David W	H0075556	(509) 373-2689	10/15/2008

SCREENING

PER Significance Level	
PIE/CIM	

Independent Assessment Review	Occurrence Report Number	Externally Identified	
No		No	

Assigned Responsible Manager	Facilities Rep / SSO	Safety Management Rep	
Rolph, Jim T			

Program	Safety Management Program
• **N/A**	• **N/A**

PER Screening Comments

cc: Lee Livesey (Nancy Brown 10/16/08)

Causal Code

MGT/Comm/Train	**Human Performance**	**GEMS**	**Equip/Eng/Other**

Failed Barrier	ORPS Code	Functional Area	Work Process
	Not Applicable	Radiation Protection	• Radiological Contamination Control

ISMS	Consequence Code	
Provide feedback and continuous improvement	• Contamination-Natural Forces - Radioactive material on/or transported by vegetation, wildlife, wind, rain. Does not include non-surveillance work	

	related events.		
PER Screening Chair	**PER Screening Chair ID**	**PER Screening Chair Phone**	**PER Screening Date**
Brown, Nancy L	H0088797	(509) 373-0992	10/16/2008

PAAA REVIEW

PAAA Screening	**PAAA Codes**	**Function Codes**	
PAAA, Non-NTS Reportable	• 10 CFR 835.602 (a)	• RadCon Inadequate Contamination Control • RadCon Legacy Contamination	
NTS Report Number	**NTS Report Date**		
Repetitive / Recurrent	**Programmatic**	**Intentional Violation / Misrepresentation**	
No	No	No	

PAAA Screening Comments

PAAA Reviewer Name	**PAAA Review Date**	
Anderson, Craig E	10/16/2008	
PAAA Approver Name	**PAAA Approve Date**	
Anderson, Craig E	10/27/2008	

CAUSE ANALYSIS

Description of Occurrence

Extent of Condition

Safety Significance

Generic Implications

Remedial Corrective Action

Causal Analysis, Apparent Cause and/or Root Cause Analysis

CORRECTIVE ACTIONS

Actionee	**Action Due Date**	**E-STARS Number**
Livesey, Lee M	08/31/2009	WRPS-PER-2008-0078.1

Action

Action 1: Document delivery of the initiative to develop a consistent methodology for the determination of transferrable contamination in outdoor areas among contractors to the Hanford Site Radiological Control Forum. Evidence of completion will be via Hanford Site Radiological Control Forum Meeting Minutes. Responsible person: Lee Livesey

Corrective Action Attachments

- Extension Request WRPS-PER-2008-0078.1.msg
- Extension Request WRPS-PER-2008-0078_1.msg
- Link to PER
- RE_ Extension Request WRPS-PER-2008-0431_1_ WRPS-PER-2008-0078_1.msg

Actionee	**Action Due Date**	**E-STARS Number**
Livesey, Lee M	12/30/2008	WRPS-PER-2008-0078.2

Action

Action 2: Provide input to the WRPS working group (Jim Rolph specifically as the primary WRPS Radiological Control representative) identifying the need to specify roles and responsibilities in the Administrative Interface Agreement between

Fluor Hanford and WRPs for Integrated Biological Control Services. Evidence of completion will be via e-mail, meeting minutes, or other means to demonstrate the communication of the identified issue. Responsible person: Lee Livesey.

Corrective Action Attachments

- e-stars WRPS-PER-2008-0078.2.msg
- Link to PER

PIE/CIM

Evaluation of PIE/CIM Initiative

The following e-stars action items are to track the progress of the actions referred to in the suggestion.

ATTACHMENTS

Link to PER

AUDIT HISTORY

Change Date	Auditor	Comments
10/20/2008 07:55	Owen, Annette	Responsible Manager Task Launched by Owen, Annette
12/16/2008 14:14	Glaman, Linda R	Corrective actions Launched by Glaman, Linda R
05/07/2009 13:13	Glaman, Linda R	Change to Cause Analysis screen/Corrective Action plan.
05/07/2009 13:14	Glaman, Linda R	Extended CA .1 to 7-30-09 per attached email request. LBG The development of the consistent methodology has been delayed to include the results of Surveillance Number: S-09-SED-FHI-008, "Biological Control Program, WIDS, and the environmental monitoring program". Presentation and concurrence regarding the development of a consistent methodology described above will be performed upon completion of this DOE/RL report. L Livesey for J Rolph 5-9-09
07/09/2009 08:51	Glaman, Linda R	Change to Cause Analysis screen/Corrective Action plan.
07/09/2009 08:53	Glaman, Linda R	Extend CA .1 per attached email. LBG 7-9-09 Radiological Control Programs would request an extension until August 31, 2009 to the following e-stars actions: WRPS-PER-2008-0431.1 WRPS-PER-2008-0078.1 WRPS-PER-2008-0431.1- A follow-up action in response to this analysis (PIE/CIM of WRPS-PER-2008-0431) will be to submit for consideration and review by TOC Radiological Control Forum a Forum Action Tracking (FACT) proposal. This proposal will detail the identified issue and present to the Forum alternative solutions for clarification and/or necessary revisions to HNF-5183 or other implementing documents. Preparation of the FACT will be prepared and submitted by June 1, 2009. Responsible person is Lee Livesey This action is identical to the action associated with WRPS-PER-2008-0078.1. Additional time is needed to fully assess the impact of the proposed changes. L Livesey 7-8-09 approved J Rolph 7-8-09

-- End of Report --
08/06/2009 09:20 AM

Task# WRPS-PER-2008-0078

E-STARS[R] Report
Task Detail Report
08/06/2009 0920

TASK INFORMATION			
Task#	WRPS-PER-2008-0078		
Subject	PIE; Contaminated rabbit feces discovered in a large uncontrolled area up to 60 feet from CA boundary North of SY-farm		
Parent Task#		**Status**	Open
Reference		**Due**	09/11/2009
Originator	^PER Coordinator	**Priority**	Medium
Originator Phone		**Category**	PER
Origination Date	10/15/2008 1043	**Generic1**	None
Remote Task#		**Generic2**	None
Deliverable	PER Review	**Generic3**	None
Class	None	**View Permissions**	Global
Instructions	*No Instructions*		

ROUTING LISTS

1	Corrective actions Routing Lis	Active
	To launch Corrective actions.	
	• ^PER CAs - Assign - Awaiting Response - Due Date - 09/07/2009 0000 *Instructions:*	
2	Responsible Manager	Inactive
	Evaluate suggestion, enter comments and required actions on PIE/CIM tab of the PER. Disposition in accordance with TFC-ESHQ-Q_C-C-01, Problem Evaluation Request.	
	• Rolph, Jim T - Assign - Completed with comments - 12/15/2008 0824 *Instructions:* ↳ *Routing List:* Route List - Inactive *Instructions:* • Livesey, Lee M - Assign - Completed with comments - 12/11/2008 1308	
	• Rolph, Jim T - Assign - Completed with comments - 12/15/2008 0825 *Instructions:* Did you contact the originator about the PER? Document your contact in the response window.	
3	Review Initial PER	Inactive
	Review New PER	
	• ^SO(Strasser, David W) - Review - Concur - 10/15/2008 1358 *Instructions:*	
	• ^PER Screening(Brown, Nancy L) - Review - Concur - 10/16/2008 1148 *Instructions:*	
	• ^Mgr Review(Owen, Annette) - Review - Concur - 10/20/2008 0755 *Instructions:*	

ATTACHMENTS

Attachments	1. Link to PER

COMMENTS

Task# WRPS-PER-2008-0078

Poster	Livesey, Lee M (Matarazzo, Laci D) - 12/11/2008 1308
	Matarazzo, Laci -- Completed
	The following e-stars action items to track the progress of the actions referred to in the suggestion have been launched. Action 1: Document delivery of the initiative to develop a consistent methodology for the determination of transferrable contamination in outdoor areas among contractors to the Hanford Site Radiological Control Forum. Evidence of completion will be via Hanford Site Radiological Control Forum Meeting Minutes. Responsible person: Lee Livesey Due Date: 02/14/08. (No meeting will be held in January) Action 2: Provide input to the WRPS working group (Jim Rolph specifically as the primary WRPS Radiological Control representative) identifying the need to specify roles and responsibilities in the Administrative Interface Agreement between Fluor Hanford and WRPs for Integrated Biological Control Services. Evidence of completion will be via e-mail, meeting minutes, or other means to demonstrate the communication of the identified issue. Responsible person: Lee Livesey. Due Date 12/30/2009 LdM for LML
Poster	Rolph, Jim T (Matarazzo, Laci D) - 12/15/2008 0824
	Matarazzo, Laci -- Completed
	Completed. LdM for JTR
Poster	Rolph, Jim T (Matarazzo, Laci D) - 12/15/2008 0825
	Matarazzo, Laci -- Completed
	Completed. LdM for JTR
Poster	^PER Coordinator (Glaman, Linda R) - 05/07/2009 1314
	Due Date Extension
	Extended CA .1 to 7-30-09 per attached email request. LBG The development of the consistent methodology has been delayed to include the results of Surveillance Number: S-09-SED-FHI-008, "Biological Control Program, WIDS, and the environmental monitoring program". Presentation and concurrence regarding the development of a consistent methodology described above will be performed upon completion of this DOE/RL report. L Livesey for J Rolph 5-9-09
Poster	^PER Coordinator (Glaman, Linda R) - 07/09/2009 0853
	Due Date Extension
	Extend CA .1 per attached email. LBG 7-9-09 Radiological Control Programs would request an extension until August 31, 2009 to the following e-stars actions: WRPS-PER-2008-0431.1 WRPS-PER-2008-0078.1 WRPS-PER-2008-0431.1- A follow-up action in response to this analysis (PIE/CIM of WRPS-PER-2008-0431) will be to submit for consideration and review by TOC Radiological Control Forum a Forum Action Tracking (FACT) proposal. This proposal will detail the identified issue and present to the Forum alternative solutions for clarification and/or necessary revisions to HNF-5183 or other implementing documents. Preparation of the FACT will be prepared and submitted by June 1, 2009. Responsible person is Lee Livesey This action is identical to the action associated with WRPS-PER-2008-0078.1. Additional time is needed to fully assess the impact of the proposed changes. L Livesey 7-8-09 approved J Rolph 7-8-09

TASK DUE DATE HISTORY

Task# WRPS-PER-2008-0078

Modified	07/09/2009 0854 - ^PER Coordinator	**New Due Date**	09/11/2009 0000
Modified	05/07/2009 1315 - ^PER Coordinator	**New Due Date**	08/10/2009 0000
Modified	12/16/2008 1414 - ^PER Coordinator	**New Due Date**	03/04/2009 0000
Modified	12/16/2008 1414 - ^PER Coordinator	**New Due Date**	02/28/2009 0000
Modified	10/20/2008 0755 - ^PER Coordinator	**New Due Date**	12/14/2008 1630
Modified	10/20/2008 0755 - ^PER Coordinator	**New Due Date**	12/14/2008 1630
Modified	10/15/2008 1043 - ^PER Coordinator	**New Due Date**	10/17/2008 1630

SUB TASK HISTORY

Subtask#	WRPS-PER-2008-0078.1				
Subject	WRPS-PER-2008-0078; PIE; Action 1: Document delivery of the initiative to develop a consistent meth				
Originator	^PER CAs				
	Routing List	Corrective Action			
		Assignee	Livesey, Lee M	**Response**	Completed w/Com
		Assignee	Rolph, Jim T	**Response**	Concur
Subtask#	WRPS-PER-2008-0078.2				
Subject	WRPS-PER-2008-0078; PIE; Action 2: Provide input to the WRPS working group (Jim Rolph specifically as the primary WRPS Radiological Control represent				
Originator	^PER CAs				
	Routing List	*No Active Routing List*			

-- end of report --

Task# WRPS-PER-2008-0078.1

E-STARS[R] Report
Task Detail Report
08/06/2009 1042

TASK INFORMATION			
Task#	WRPS-PER-2008-0078.1		
Subject	WRPS-PER-2008-0078; PIE; Action 1: Document delivery of the initiative to develop a consistent meth		
Parent Task#	WRPS-PER-2008-0078	**Status**	Open
Reference	WRPS-PER-2008-0078	**Due**	09/07/2009
Originator	^PER CAs	**Priority**	Medium
Originator Phone		**Category**	PER
Origination Date	12/16/2008 1414	**Generic1**	None
Remote Task#		**Generic2**	None
Deliverable	PER Review	**Generic3**	None
Class	None	**View Permissions**	Global
Instructions	*No Instructions*		

ROUTING LISTS

1	Corrective Action	Active
	Action 1: Document delivery of the initiative to develop a consistent methodology for the determination of transferrable contamination in outdoor areas among contractors to the Hanford Site Radiological Control Forum. Evidence of completion will be via Hanford Site Radiological Control Forum Meeting Minutes. Responsible person: Lee Livesey RESPONSIBLE MANAGER: When this corrective action is complete, enter a closure statement in E-STARS and close the E-STARS subtask. Refer to the Problem Evaluation Request procedure TFC-ESHQ-Q-C-C-01, Section 4.4 for closure documentation requirements	
	• Livesey, Lee M - Assign - Completed with comments - 07/09/2009 1613 *Instructions:*	
	• Rolph, Jim T - Review - Concur - 07/12/2009 1511 *Instructions:*	

ATTACHMENTS

Attachments	1. Extension Request WRPS-PER-2008-0078.1.msg 2. Extension Request WRPS-PER-2008-0078_1.msg 3. Link to PER 4. RE_ Extension Request WRPS-PER-2008-0431_1_ WRPS-PER-2008-0078_1.msg

COMMENTS

Poster	^PER Coordinator (Glaman, Linda R) - 05/07/2009 1314
	Due Date Extension
	Extended CA .1 to 7-30-09 per attached email request. LBG The development of the consistent methodology has been delayed to include the results of Surveillance Number: S-09-SED-FHI-008, "Biological Control Program, WIDS, and the environmental monitoring program". Presentation and concurrence regarding the development of a consistent methodology described above will be performed upon completion of this DOE/RL report. L Livesey for J Rolph 5-9-09
Poster	^PER Coordinator (Glaman, Linda R) - 07/09/2009 0853
	Due Date Extension

Task# WRPS-PER-2008-0078.1

	Extend CA .1 per attached email. LBG 7-9-09 Radiological Control Programs would request an extension until August 31, 2009 to the following e-stars actions: WRPS-PER-2008-0431.1 WRPS-PER-2008-0078.1 WRPS-PER-2008-0431.1- A follow-up action in response to this analysis (PIE/CIM of WRPS-PER-2008-0431) will be to submit for consideration and review by TOC Radiological Control Forum a Forum Action Tracking (FACT) proposal. This proposal will detail the identified issue and present to the Forum alternative solutions for clarification and/or necessary revisions to HNF-5183 or other implementing documents. Preparation of the FACT will be prepared and submitted by June 1, 2009. Responsible person is Lee Livesey This action is identical to the action associated with WRPS-PER-2008-0078.1. Additional time is needed to fully assess the impact of the proposed changes. L Livesey 7-8-09 approved J Rolph 7-8-09
Poster	Livesey, Lee M - 07/09/2009 1613
	Completed
	E-Stars action WRPS-PER-2008-0078.1 generated from analysis of the associated per recommended and initiated the following action: Action 1: Document delivery of the initiative to develop a consistent methodology for the determination of transferrable contamination in outdoor areas among contractors to the Hanford Site Radiological Control Forum. Evidence of completion will be via Hanford Site Radiological Control Forum Meeting Minutes. Responsible person: Lee Livesey The subject initiative has undergone conceptual discussion between and among the prime contractors to the Department of Energy at the Hanford Site. The informal discussions have clearly established that no consensus might reasonably be achieved by the various contractors regarding a unified and consistent methodology for the determination of transferrable contamination in outdoor areas. The methodology currently in place at Washington River Protection Solutions is sufficiently conservative to ensure the continuation of safe work. The methodology established at WRPS has a solid technical basis, has the tacit approval of Department of Energy, Office of River Protection, and has been in place since 2005. The determined lack of contractor interest in support of developing a common methodology make the expenditure of resources in pursuit of this initiative of marginal value. This concludes the extent of activity within the scope of WRPS"s contract that can be accomplished in regard to this matter. LML 07/09/2009

TASK DUE DATE HISTORY

Modified	07/09/2009 0854 - ^PER Coordinator	**New Due Date**	08/31/2009 0000
Modified	05/07/2009 1315 - ^PER Coordinator	**New Due Date**	07/30/2009 0000
Modified	12/16/2008 1414 - ^PER CAs	**New Due Date**	02/24/2009 0000
Modified	12/16/2008 1414 - ^PER CAs	**New Due Date**	02/28/2009 0000

SUB TASK HISTORY

No Subtasks

-- end of report --

Message

From: Livesey, Lee M

Sent: Thursday, May 07, 2009 12:41 PM

To: ^WRPS Corrective Action Group

Cc: Rolph, James T; Livesey, Lee M

Subject: Extension Request WRPS-PER-2008-0078.1

Please extend the action identified in e-stars action WRPS-PER-2008-0078.1 below until 07/30/2009 .

Action 1: Document delivery of the initiative to develop a consistent methodology for the determination of transferrable contamination in outdoor areas among contractors to the Hanford Site Radiological Control Forum. Evidence of completion will be via Hanford Site Radiological Control Forum Meeting Minutes. Responsible person: Lee Livesey

The development of the consistent methodology has been delayed to include the results of Surveillance Number: S-09-SED-FHI-008, "Biological Control Program, WIDS, and the environmental monitoring program". Presentation and concurrence regarding the development of a consistent methodology described above will be performed upon completion of this DOE/RL report.

Lee

Message

From: Livesey, Lee M

Sent: Thursday, May 07, 2009 12:41 PM

To: ^WRPS Corrective Action Group

Cc: Rolph, James T; Livesey, Lee M

Subject: Extension Request WRPS-PER-2008-0078.1

Please extend the action identified in e-stars action WRPS-PER-2008-0078.1 below until 07/30/2009 .

Action 1: Document delivery of the initiative to develop a consistent methodology for the determination of transferrable contamination in outdoor areas among contractors to the Hanford Site Radiological Control Forum. Evidence of completion will be via Hanford Site Radiological Control Forum Meeting Minutes. Responsible person: Lee Livesey

The development of the consistent methodology has been delayed to include the results of Surveillance Number: S-09-SED-FHI-008, "Biological Control Program, WIDS, and the environmental monitoring program". Presentation and concurrence regarding the development of a consistent methodology described above will be performed upon completion of this DOE/RL report.

Lee

Message

From: Livesey, Lee M

Sent: Thursday, May 07, 2009 12:41 PM

To: ^WRPS Corrective Action Group

Cc: Rolph, James T; Livesey, Lee M

Subject: Extension Request WRPS-PER-2008-0078.1

Please extend the action identified in e-stars action WRPS-PER-2008-0078.1 below until 07/30/2009 .

Action 1: Document delivery of the initiative to develop a consistent methodology for the determination of transferrable contamination in outdoor areas among contractors to the Hanford Site Radiological Control Forum. Evidence of completion will be via Hanford Site Radiological Control Forum Meeting Minutes. Responsible person: Lee Livesey

The development of the consistent methodology has been delayed to include the results of Surveillance Number: S-09-SED-FHI-008, "Biological Control Program, WIDS, and the environmental monitoring program". Presentation and concurrence regarding the development of a consistent methodology described above will be performed upon completion of this DOE/RL report.

Lee

Task# WRPS-PER-2008-0078.2

E-STARS[R] Report
Task Detail Report
08/06/2009 1044

TASK INFORMATION			
Task#	WRPS-PER-2008-0078.2		
Subject	WRPS-PER-2008-0078; PIE; Action 2: Provide input to the WRPS working group (Jim Rolph specifically as the primary WRPS Radiological Control represent		
Parent Task#	WRPS-PER-2008-0078	**Status**	CLOSED 12/18/2008
Reference	WRPS-PER-2008-0078	**Due**	01/09/2009
Originator	^PER CAs	**Priority**	Medium
Originator Phone		**Category**	PER
Origination Date	12/16/2008 1414	**Generic1**	None
Remote Task#		**Generic2**	None
Deliverable	PER Review	**Generic3**	None
Class	None	**View Permissions**	Global
Instructions	*No Instructions*		

ROUTING LISTS		
1	Corrective Action	Inactive
	Action 2: Provide input to the WRPS working group (Jim Rolph specifically as the primary WRPS Radiological Control representative) identifying the need to specify roles and responsibilities in the Administrative Interface Agreement between Fluor Hanford and WRPs for Integrated Biological Control Services. Evidence of completion will be via e-mail, meeting minutes, or other means to demonstrate the communication of the identified issue. Responsible person: Lee Livesey. RESPONSIBLE MANAGER: When this corrective action is complete, enter a closure statement in E-STARS and close the E-STARS subtask. Refer to the Problem Evaluation Request procedure TFC-ESHQ-Q-C-C-01, Section 4.4 for closure documentation requirements	
	• Livesey, Lee M - Assign - Completed with comments - 12/16/2008 1552 *Instructions:*	
	• Rolph, Jim T - Review - Concur with comments - 12/18/2008 0903 *Instructions:*	

ATTACHMENTS	
Attachments	1. e-stars WRPS-PER-2008-0078.2.msg 2. Link to PER

COMMENTS	
Poster	Livesey, Lee M - 12/16/2008 1552
	Completed
	The issue identified in the subject PER WRPS-PER-2008-0078 as Concern 2: that no documented formal turnover process of pertinent data/information with respect to radioactive contamination from Biological Vectors has been communicated to the appropriate person for consideration in the Authorization Interface Agreement between WRPS and FH Integrated Biological Control. The attached e-mail provides evidence of this communication. LML
Poster	Rolph, Jim T (Matarazzo, Laci D) - 12/18/2008 0903
	Matarazzo, Laci -- Concur

Task# WRPS-PER-2008-0078.2			
	Concur. LdM for JTR		
Poster	^PER CAs (Owen, Annette) - 12/18/2008 1152		
	CLOSED		
	Closure statement and attached documentation are adequate to close this action.		
TASK DUE DATE HISTORY			
Modified	12/16/2008 1414 - ^PER CAs	**New Due Date**	01/09/2009 0000
Modified	12/16/2008 1414 - ^PER CAs	**New Due Date**	02/28/2009 0000
SUB TASK HISTORY			
No Subtasks			

-- end of report --

Message

From: Livesey, Lee M
Sent: Tuesday, December 16, 2008 3:21 PM
To: Matarazzo, Laci D
Cc: Livesey, Lee M
Subject: e-stars WRPS-PER-2008-0078.2

Please use the e-mail below as evidence of completion for the e-stars action WRPS-PER-2008-0078.2 to "Provide input to the WRPS working group (Jim Rolph specifically as the primary WRPS Radiological Control representative) identifying the need to specify roles and responsibilities in the Administrative Interface Agreement between Fluor Hanford and WRPs for Integrated Biological Control Services."

Thanks,

Lee

From: Livesey, Lee M
Sent: Thursday, December 11, 2008 7:05 AM
To: Rolph, James T
Subject: Biological Controls Meeting Minutes/Actions PER-WRPS-2008-0078

Jim,

I believe it has been discussed previously, but I wanted to make sure we covered one of the associated issues with respect to the IBC program.

PER-WRPS-PER-2008-0078 notes the following concern with respect to management of the IBC program among contractors:
"No documented formal turnover process of pertinent data/information."

My recommendation is that this aspect of operations be addressed within the Authorization Interface Agreement.

Thanks,

Lee

From: Hatcher, Kathy A
Sent: Wednesday, December 10, 2008 2:01 PM
To: Brown, David W; Johnson, Austin Ray; Kelly, James R; Jennings, Tony L; Parnell, William L (Bill); Welch, Jerry L; Kitchen, William A; Rolph, James T; Ekstrom, Kevin A; Livesey, Lee M; McLain, Kenneth W (Ken); Bratvold, Tom; Van Meighem, Jeff S; Hauger, Gregory S (Greg); Bumgarner, Richard L; Bickel, Eric E; Lombardozzi, Peter R; Osborne, Bill L; Norman, Dottie L; Millsap, William J (Joel); Schwier, Edward G (Ed)
Subject: Biological Controls Meeting Minutes/Actions

The following outlines the meeting minutes related to the biological controls issues resolution team.

Agenda

1. Safety - Parking lot safety during holiday period

2. Team 1 Update

a. Kevin Ekstrom stated he had only received comments from WCH on the maps. TOC had their comments at the meeting ready to provide. PRC did not provide comments and could not commit to when they would have them done. **Action: Jennings** to contact K. Hatcher on 12/10 to advise on date when PRC will have their comment to Kevin Esktrom. **Hatcher** to set the next meeting for 10 working days after the PRC date to give Kevin and the other technical POCs time to review comments and solve as many issues as possible.

b. Issues - have not been determined as the comments and feedback had not all been provided to Kevin to a. work between the companies first for resolution or b. elevate to Hatcher if the technical POCs working on the boundaries and maps cannot agree. **Action: Ekstrom** to either bring signed boundary maps or list of issues to the next meeting.

3. Team 2 update

a. Final proposed schedules - Ray Johnson briefed that the TOC and PRC schedules for the legacy cleanup and the routine vegetation and animal control activities were ready for review..there were a few areas still being added. A discussion ensued relative to PHMC's ability to support everything that was on the schedule given the limitations of the one truck, etc. It was determined that PHMC would review the schedules internally one more time and that by next week the final proposed schedules would be ready for coordination and management review by PRC and TOC. **Action; Johnson** to review schedules internally with PHMC management, refine as necessary, add any missing areas and get back to PRC and TOC by 12/19/08 (with goal to be ASAP).

b. Truck/ERDF update - PHMC was meeting with WCH on Wednesday 12/10/08 to start the discussion on some alternate disposal options to eliminate the delays caused by not being able to unload at the ERDF and the ERDF request to 30 day advance notice for disposal. This is very difficult to meet as the biological controls activities are so weather dependent. **Action: Johnson** to brief team on any progress in this area.

4. Team 3 update

a. AIA - The final draft AIA will be sent out this week from Jim Rolph. It is very close to being finalized. Once the technical folks have agreed, the AIA will be formatted, a document number assigned and sent out for signing by the IM group. Action; Rolph to send out final proposed AIA by 12/11/08, incorporate any final comments and send to TOC IM. Van Meighem to get document formatted, document number assigned and routed for signature.

b. Posting Protocol - No update provided in this area.

5. Path Forward/Actions - see actions embedded in update information. The next meeting is TBD based on the PRC provided date for comments on the boundary maps.

Kathy A. Hatcher
TOC Interface Management
509-372-0217

Save

Problem Evaluation Request (PER)

WRPS-PER-2008-0088
Closed 02/09/2009 08:30

PER No	Date of Discovery	Time of Discovery (24:00)	Project
WRPS-PER-2008-0088	10/16/2008	06:50	Ops Shifts

Location

Admin Facilities

How Was Problem Discovered

General Observation

Description of Concern or Problem

DOE on-call Facility Representative (Fac Rep) not notified about a phone call from WRPS Environmental to Washington Department of Ecology (WDOE) regarding a late Annulus Leak Detection surveillance in AP Tank Farm in accordance with the Event Notification Procedure, TFC-OPS-OPER-CD-01.

Power to AP farm was turned off at 1739 on Monday, 10/13/08 due to an electrical safety issue. To compensate for the power being off, alternate tank leak detection surveillance was implemented, which consisted of performing an electrical continuity check of the annulus leak detection probes for each of the AP farm tanks. Per the environmental monitoring plan, this surveillance was to be completed daily, not to exceed 24 hours. For various reasons, the facility was unable to obtain the first set of readings until 1837 on Tuesday, 10/14/08, which was 58 minutes late.

At approximately 1700 on Tuesday, when it was determined that the surveillance would not be completed in time, the WRPS Environmental on-call person was notified. The on-call environmental person stated that they would contact WDOE and inform them that the surveillance would be late and that we were working to complete it as soon as possible. At approximately 1730, the environmental on-call person notified the Senior Shift Manager that they had completed an informal notification to WDOE and that they would make the formal notification the next morning. At this point, the Senior Shift Manager determined that an Event Notification was not required until the formal notification was made to WDOE. It wasn't recognized until 0650 on 10/16/08 that notifications had not been made in accordance with the event notification procedure.

Requirement Not Satisfied	Source Document Number

Equipment Identification Number	System Identification
N/A	

Immediate actions Taken or Planned

DOE on-call Fac Rep was notified at 0816 and a SOEN message was sent at 1013.

Recommended Corrective actions

Assign this PER to Pete Owen

Originator Contact

I would like to help in investigating the cause

Originators Name	Originators ID	Originators Phone	Date Initiated
Owen, Pete	H0074134	(509) 373-1107	10/16/2008

SHIFT OPERATIONS REVIEW

Title

Fac Rep) not notified about an informal phone call from WRPS Environmental to Washington Department of Ecology (WDOE)

How Discovered	Agency
self-ID prior to event	

Reportability	SSC Operability	Operability Review	Comp Measures Req
Non-Reportable	N/A	N/A	

Describe actions Taken or Recommended

No immediate BO SO actions identified.

SO Reviewer Name	SO Reviewer ID	SO Reviewer Phone	SO Review Date
Wallgren, Carl B	H0099480	(509) 373-2689	10/16/2008

SCREENING

PER Significance Level			
PER with Resolution			
Independent Assessment Review	**Occurrence Report Number**	**Externally Identified**	
No		Yes	
Assigned Responsible Manager	**Facilities Rep / SSO**	**Safety Management Rep**	
Owen, Pete			
Program		**Safety Management Program**	
• **N/A**		• **N/A**	
PER Screening Comments			
PER w/ Res with informal Apparent Cause Analysis. (Nancy Brown 10/20/08)			
Causal Code			
A3B2C05	Human Performance LTA Rule Based Error Situation incorrectly identified or represented resulting in wrong rule used		
A4B1C01	Management Problem Management Methods LTA Management policy guidance/expectations not well-defined, understood or enforced		
MGT/Comm/Train	**Human Performance**	**GEMS**	**Equip/Eng/Other**
Failed Barrier	**ORPS Code**	**Functional Area**	**Work Process**
	Not Applicable	Operations	• Notifications • Regulatory Reporting • Surveillance
ISMS	**Consequence Code**		
Perform work within the controls	• Communications - Inadequate communications, roles, responsibilities • Notifications and Abnormal Events - Issues relating to investigation of operational events including quality of critiques and occurrence reports.		
PER Screening Chair	**PER Screening Chair ID**	**PER Screening Chair Phone**	**PER Screening Date**
Brown, Nancy L	H0088797	(509) 373-0992	10/20/2008
PAAA REVIEW			
PAAA Screening	**PAAA Codes**	**Function Codes**	
PAAA, Non-NTS Reportable	• 10 CFR 830.122 (e)(1)	• Communication	
NTS Report Number	**NTS Report Date**		
Repetitive / Recurrent	**Programmatic**	**Intentional Violation / Misrepresentation**	
No	No	No	
PAAA Screening Comments			
Entered review for CE Anderson.			
PAAA Reviewer Name	**PAAA Review Date**		
Quintana, Michael S	10/20/2008		
PAAA Approver Name	**PAAA Approve Date**		
Anderson, Craig E	10/27/2008		
SENIOR MANAGEMENT REVIEW/CONCURRENCE			

TF Operations Morning Leadership Call

None. 10/21/08

Instructions for Responsible Manager

Review the PER Screening Tab and Senior Manager Review for requested data. Complete the task in E-STARS in accordance with TFC-ESHQ-Q_C-C-01, and TFC-ESHQ-Q_ADM-C-12 Apparent Cause Analysis & Corrective Action Planning.

Senior Management	Sr Mgmt ID	Sr Mgmt Phone	Sr Mgmt Review Date
Owen, Annette	H0054042	(509) 372-0533	10/21/2008

CAUSE ANALYSIS

Description of Occurrence

DOE on-call Facility Representative (Fac Rep) not notified about a phone call from WRPS Environmental to Washington Department of Ecology (WDOE) regarding a late Annulus Leak Detection surveillance in AP Tank Farm in accordance with the Event Notification Procedure, TFC-OPS-OPER-CD-01.

Power to AP farm was turned off at 1739 on Monday, 10/13/08 due to an electrical safety issue. To compensate for the power being off, alternate tank leak detection surveillance was implemented, which consisted of performing an electrical continuity check of the annulus leak detection probes for each of the AP farm tanks. Per the environmental monitoring plan, this surveillance was to be completed daily, not to exceed 24 hours. For various reasons, the facility was unable to obtain the first set of readings until 1837 on Tuesday, 10/14/08, which was 58 minutes late.

At approximately 1700 on Tuesday, when it was determined that the surveillance would not be completed in time, the WRPS Environmental on-call person was notified. The on-call environmental person stated that they would contact WDOE and inform them that the surveillance would be late and that we were working to complete it as soon as possible. At approximately 1730, the environmental on-call person notified the Senior Shift Manager that they had completed an informal notification to WDOE and that they would make the formal notification the next morning. At this point, the Senior Shift Manager determined that an Event Notification was not required until the formal notification was made to WDOE. It wasn't recognized until 0650 on 10/16/08 that notifications had not been made in accordance with the event notification procedure.

Extent of Condition

In October 2007, PER CH2M-PER-2007-1792 was written to document weaknesses with notifications to Facility Representatives (Fac Reps) during event notifications. This PER was designated as a Significant PER (SIG-PER) and a formal root cause analysis was performed in November 2007 (attached). Several corrective actions were identified and completed as a result of this root cause analysis. A search of the PER database shows that there haven't been any instances of missed Fac Rep notifications since these corrective actions were implemented until the instance for which this PER was written. This does not appear to be a programmatic breakdown, but more of a human performance issue.

Safety Significance

There is no apparent safety significance associated with late or missed Fac Rep notifications.

Generic Implications

Remedial Corrective Action

The affected Shift Manager was counseled on the importance of notifying the Fac Rep anytime a notification was made to an outside agency, whether formal or informal.

Causal Analysis, Apparent Cause and/or Root Cause Analysis

A3B2C05 - Human Performance LTA - Rule Based Error - Situation incorrectly identified or represented resulting in wrong rule used.

The Shift Manager incorrectly interpreted the notification requirements of TFC-OPS-OPER-CD-01, Event Notification, for notifications to outside agencies to only apply to formal notifications. The event notification procedure does not distinguish between formal and informal notifications and, as such, any notification to an outside agency should be reported in accordance with the notification matrix. The DOE Fac Rep should have been notified as soon as the Shift Manager was informed that any type of notification was going to be made.

A4B1C01 - Management Problem - Management Methods LTA - Management policy guidance/expectations not well-defined, understood, or enforced

Shift Operations management failed to make it clearly understood that the DOE Fac Rep should be notified of ANY notifications to outside agencies. It is imperative that our customer know about any and all issues that are reported to outside agencies so that they can ensure they are up to speed should they be contacted by these agencies.

CORRECTIVE ACTIONS

Actionee	Action Due Date	E-STARS Number
Owen, Pete	12/10/2008	WRPS-PER-2008-0088.1

Action
Complete a formal briefing with all incumbent Shift Managers on the importance of keeping the Fac Reps apprised of any notifications to outside agencies. Submit a copy of the briefing package and course completion roster(s) showing 100% of the incumbent shift managers received the briefing.
Corrective Action Attachments
• Event Notification Root Cause Analysis • Briefing Presentation • Link to PER • Briefing Roster

Actionee	Action Due Date	E-STARS Number
Owen, Pete	01/14/2009	WRPS-PER-2008-0088.2

Action
Issue an Informational bulletin to all qualified Shift Managers/OEs regarding the event notification process and the importance of keeping the DOE Fac Reps apprised of any notifications to off-site agencies. Submit a copy of the bulletin and distribution list.
Corrective Action Attachments
• Event Notification Root Cause Analysis • Link to PER • Information Bulletin Message • List of Qualified OEs • Information Bulletin

ATTACHMENTS
Event Notification Root Cause Analysis
Link to PER

AUDIT HISTORY

Change Date	Auditor	Comments
10/21/2008 08:06	Owen, Annette	Responsible Manager Task Launched by Owen, Annette
12/02/2008 10:11	Glaman, Linda R	Corrective actions Launched by Glaman, Linda R

-- End of Report --
02/09/2009 08:45 AM

Task# WRPS-PER-2008-0088			
E-STARS[R] Report Task Detail Report 02/09/2009 0845			
TASK INFORMATION			
Task#	WRPS-PER-2008-0088		
Subject	RES; Fac Rep) not notified about an informal phone call from WRPS Environmental to Washington Department of Ecology (WDOE)		
Parent Task#		Status	CLOSED 02/09/2009
Reference		Due	01/20/2009
Originator	^PER Coordinator	Priority	Medium
Originator Phone		Category	PER
Origination Date	10/16/2008 1356	Generic1	None
Remote Task#		Generic2	None
Deliverable	PER Review	Generic3	None
Class	None	View Permissions	Global
Instructions	*No Instructions*		
ROUTING LISTS			
1	Corrective actions Routing Lis		Inactive
	To launch Corrective actions.		
	• ^PER CAs(Owen, Annette) - Assign - Completed - 02/09/2009 0820 *Instructions:*		
2	Responsible Manager		Inactive
	Review the PER Screening Tab and Senior Manager Review for requested data. Complete the task in E-STARS in accordance with TFC-ESHQ-Q_C-C-01, and TFC-ESHQ-Q_ADM-C-12 Apparent Cause Analysis & Corrective Action Planning.		
	• Owen, Pete - Assign - Completed with comments - 11/26/2008 0930 *Instructions:*		
	• Owen, Pete - Assign - Completed with comments - 11/26/2008 0931 *Instructions:* Did you contact the originator about the PER? Document your contact in the response window.		
3	Review Initial PER		Inactive
	Review New PER		
	• ^SO(Wallgren, Carl B) - Review - Concur - 10/16/2008 2016 *Instructions:*		

Task# WRPS-PER-2008-0088			
	• ^PER Screening(Brown, Nancy L) - Review - Concur - 10/20/2008 1532 *Instructions:*		
	• ^Mgr Review(Owen, Annette) - Review - Concur - 10/21/2008 0806 *Instructions:*		
ATTACHMENTS			
Attachments	1. Event Notification Root Cause Analysis 2. Link to PER		
COLLABORATION			
COMMENTS			
Poster	Owen, Pete - 11/26/2008 0911		
	Completed		
	Completed Apparent Cause Analysis. Identified and assigned corrective actions. This activity is complete. Pete Owen Manager, Shift Operations		
Poster	Owen, Pete - 11/26/2008 0911		
	Completed		
	Apparent Cause Analysis complete. Corrective actions identified and assigned. This activity is complete. Pete Owen Manager, Shift Operations		
Poster	^PER Coordinator (Owen, Annette) - 02/09/2009 0802		
	CLOSED		
	All Corrective Actions closed.		
TASK DUE DATE HISTORY			
Modified	12/02/2008 1011 - ^PER Coordinator	New Due Date	01/20/2009 0000
Modified	10/21/2008 0806 - ^PER Coordinator	New Due Date	11/30/2008 1630
Modified	10/21/2008 0806 - ^PER Coordinator	New Due Date	11/30/2008 1630
Modified	10/16/2008 1356 - ^PER Coordinator	New Due Date	10/18/2008 1630
SUB TASK HISTORY			
Subtask#	WRPS-PER-2008-0088.1		
	WRPS-PER-2008-0088; RES; Complete a formal briefing with all incumbent Shift		

Task# WRPS-PER-2008-0088		
Subject	Managers on the importance of keeping the Fac Reps apprised of any notifi	
Originator	^PER CAs	
	Routing List	*No Active Routing List*
Subtask#	WRPS-PER-2008-0088.2	
Subject	WRPS-PER-2008-0088; RES; Issue an Informational bulletin to all qualified Shift Managers/OEs regarding the event notification process and the importan	
Originator	^PER CAs	
	Routing List	*No Active Routing List*
-- end of report --		

Task# WRPS-PER-2008-0088.1

E-STARS[R] Report
Task Detail Report
02/09/2009 0845

TASK INFORMATION

Task#	WRPS-PER-2008-0088.1		
Subject	WRPS-PER-2008-0088; RES; Complete a formal briefing with all incumbent Shift Managers on the importance of keeping the Fac Reps apprised of any notifi		
Parent Task#	WRPS-PER-2008-0088	Status	CLOSED 12/08/2008
Reference	WRPS-PER-2008-0088	Due	12/12/2008
Originator	^PER CAs	Priority	Medium
Originator Phone		Category	PER
Origination Date	12/02/2008 1011	Generic1	None
Remote Task#		Generic2	None
Deliverable	PER Review	Generic3	None
Class	None	View Permissions	Global
Instructions	*No Instructions*		

ROUTING LISTS

1	Corrective Action	Inactive
	Complete a formal briefing with all incumbent Shift Managers on the importance of keeping the Fac Reps apprised of any notifications to outside agencies. Submit a copy of the briefing package and course completion roster(s) showing 100% of the incumbent shift managers received the briefing. RESPONSIBLE MANAGER: When this corrective action is complete, enter a closure statement in E-STARS and close the E-STARS subtask. Refer to the Problem Evaluation Request procedure TFC-ESHQ-Q-C-C-01, Section 4.4 for closure documentation requirements	
	• Owen, Pete - Assign - Completed with comments - 12/08/2008 1014 *Instructions:*	

ATTACHMENTS

Attachments	1. Event Notification Root Cause Analysis 2. Briefing Presentation 3. Link to PER 4. Briefing Roster

COLLABORATION

COMMENTS

Task# WRPS-PER-2008-0088.1			
Poster	Owen, Pete - 12/08/2008 1012		
	Completed		
	Briefing completed on 12/4/08. Presentation and roster attached. This activity is complete. Pete Owen Manager, Shift Operations		
Poster	^PER CAs (Owen, Annette) - 12/08/2008 1012		
	CLOSED		
	Closure documenation adequate to close this action.		
TASK DUE DATE HISTORY			
Modified	12/02/2008 1011 - ^PER CAs	New Due Date	12/12/2008 0000
Modified	12/02/2008 1011 - ^PER CAs	New Due Date	01/20/2009 0000
SUB TASK HISTORY			
No Subtasks			
-- end of report --			

Task# WRPS-PER-2008-0088.2			
E-STARS[R] Report Task Detail Report 02/09/2009 0845			
TASK INFORMATION			
Task#	WRPS-PER-2008-0088.2		
Subject	WRPS-PER-2008-0088; RES; Issue an Informational bulletin to all qualified Shift Managers/OEs regarding the event notification process and the importan		
Parent Task#	WRPS-PER-2008-0088	Status	CLOSED 02/09/2009
Reference	WRPS-PER-2008-0088	Due	01/16/2009
Originator	^PER CAs	Priority	Medium
Originator Phone		Category	PER
Origination Date	12/02/2008 1011	Generic1	None
Remote Task#		Generic2	None
Deliverable	PER Review	Generic3	None
Class	None	View Permissions	Global
Instructions	*No Instructions*		
ROUTING LISTS			
1	Corrective Action		Inactive
	Issue an Informational bulletin to all qualified Shift Managers/OEs regarding the event notification process and the importance of keeping the DOE Fac Reps apprised of any notifications to off-site agencies. Submit a copy of the bulletin and distribution list. RESPONSIBLE MANAGER: When this corrective action is complete, enter a closure statement in E-STARS and close the E-STARS subtask. Refer to the Problem Evaluation Request procedure TFC-ESHQ-Q-C-C-01, Section 4.4 for closure documentation requirements		
	• Owen, Pete - Assign - Completed with comments - 02/05/2009 1205 *Instructions:*		
ATTACHMENTS			
Attachments	1. Event Notification Root Cause Analysis 2. Link to PER 3. Information Bulletin Message 4. List of Qualified OEs 5. Information Bulletin		
COLLABORATION			

Task# WRPS-PER-2008-0088.2			
COMMENTS			
Poster	Owen, Pete - 02/05/2009 1202		
	Completed		
	Information bulletin was sent to all qualified OEs on 121/22/08. Attached a copy of the info bulletin, the distribution message, and a list of qualified OEs. This action is closed. Pete Owen Manager, Shift Operations		
Poster	^PER CAs (Owen, Annette) - 02/09/2009 0802		
	CLOSED		
	Closure statement and attached documentation are adequate to close this action.		
TASK DUE DATE HISTORY			
Modified	12/02/2008 1011 - ^PER CAs	New Due Date	01/16/2009 0000
Modified	12/02/2008 1011 - ^PER CAs	New Due Date	01/20/2009 0000
SUB TASK HISTORY			
No Subtasks			
-- end of report --			

CH2MHILL
Hanford Group, Inc.

ROOT CAUSE ANALYSIS REPORT

CH2M-PER-2007-1792

November 20, 2007

Requirements for Notification to Facility Representatives of Operational Events Not Met

Pete Owen	Team Lead
Keith Greenough	Operations
David Brown	Operations Support
Shaun Waters	Operations Support

Team Lead: _____ Date: 11/20/07
Pete Owen

Responsible Manager: _____ Date: 11/20/07
Ted Jarecki

ESRB: _____ Date: 11-21-07
John Fulton

TABLE OF CONTENTS

1.0 EXECUTIVE SUMMARY 4
- 1.1 Conclusions 5
- 1.2 Corrective Actions 6

2.0 PROBLEM STATEMENT 6
3.0 BACKGROUND 6
4.0 CAUSE STATEMENT 9
- 4.1 Root Cause 9
- 4.2 Direct Cause 9
- 4.3 Contributing Causes 10

5.0 EXTENT OF CONDITION 10
6.0 GENERIC IMPLICATIONS 12
7.0 SAFETY SIGNIFICANCE 13
8.0 RECOMMENDED CORRECTIVE ACTIONS 13
- 8.1 Immediate Actions Taken 13
- 8.2 Corrective Action Plan 13

9.0 PROBLEM ANALYSIS 15
10.0 TIME LINE 18
11.0 LESSONS LEARNED 20

TABLE OF ATTACHMENTS

ATTACHMENT A – PER INTEGRATION TABLE 21
ATTACHMENT B – EVENT AND CAUSAL FACTOR ANALYSIS 22
ATTACHMENT C – BARRIER ANALYSIS 23
ATTACHMENT D – WHY TREE ANALYSIS 24
ATTACHMENT E – EXTENT OF CONDITION TABLE 25

Acronym Table

ATS	Analytical Technical Services
CO	Closure Operations
DNFSB	Defense Nuclear Facilities Safety Board
DOE	Department of Energy
FFG	Fluor Government Group
FOM	Facility Operations Manager (222-S)
FR	Facility Representative
HFD	Hanford Fire Department
MAP	Mission Alignment Process
MEKP	Methyl Ethyl Ketone Peroxide
PER	Problem Evaluation Request
ORP	Office of River Protection
RCT	Radiological Control Technician
RWP	Radiation Work Permit
SOM	Shift Operations Manager (WFO)
TFC	Tank Farm Contractor
WDOE	Washington State Department of Ecology
WFO	Waste Feed Operations

1.0 EXECUTIVE SUMMARY

The Office of River Protection (ORP) Facility Representatives (FR) issues a weekly report of their activities and observations at the tank farms and the 222-S laboratory. The report's intent is to share with CH2M HILL Hanford Group, Inc. (CH2M HILL), areas of strength and weakness. Areas of weakness are then categorized in a level of severity from an OBSERVATION, being the lowest, to a CONCERN being the highest.

On October 10, 2007, the Tank Farm Facility Representative Weekly Report identified weaknesses with regard to notification of the on-call FR as identified in the guidance document TFC-OPS-OPER-D-01, *Event Notification*. The report cites a Concern that "significant operational issues" thresholds are being met and thus should have prompted notification to the on-call FR.

On three occasions, the Tank Farm Facility Representative Weekly Report cited failure to contact the on-call FR ultimately resulting in issuance of the October 10, 2007, Concern, the highest issue level category. Each issue is addressed here.

The first event occurred on September 6, 2007, when the Analytical Technical Services (ATS) made a courtesy call to the Washington State Department of Ecology (WDOE) informing them they were unable to restart the sump pump #9 located in the 219-S building. The on-call FR was not notified. This was initially addressed as a Finding in Problem Evaluation Request (PER) CH2M-PER-2007-1623.

The second event occurred on September 18, 2007, when Fluor Government Group (FGG) discovered three one-gallon containers of methyl ethyl ketone peroxide (MEKP) which, when aged (containers were dated 2002), are potentially shock sensitive if they reach a stratified phase. The shift manager (SM) called 911 to activate response from the Hanford Fire Department (HFD). The HFD ultimately determined the MEKP was stable and did not represent an explosion hazard. The on-call FR was not notified. This was initially addressed as a Finding in PER CH2M-PER-2007-1675. Also discussed in the same PER, but not identified as a separate finding, was the discovery of a waste leak in the 242-A Pump Room on September 1, 2007. This leak was reported to operations management on the day of discovery, but was not reported to the on-call FR until two days later.

The third event occurred on October 2, 2007, when a 2-shelf plastic utility cart was blown off the roof of the two-story 2704-HV building by high winds and was found destroyed on the northeast corner of the building. The on-call FR was not notified. This event was identified as part of the Concern addressed in PER CH2M-PER-2007-1792.

On October 30, 2007, an independent investigation and root cause analysis team was chartered to determine the circumstances surrounding the Concern that the on-call FR are not being notified of "significant operational issues." This report documents the results of the investigation and root cause analysis.

1.1 Conclusions

There were three separate events associated with the Concern issued by the ORP Facility Representatives. While one event had clear direction to call the on-call FR and the other two were dependent upon the shift manager's interpretation as to whether the event was a significant operational issue, the root, direct, and contributing causes are different and summarized below.

222-S Courtesy Call Causes

The root (RC-01) and direct (DC) cause was the ATS Facility Operations Manager (FOM) failed to refer to guidance document TFC-OPS-OPER-D-01, *Event Notification*. Although the FOM routinely uses and is familiar with the matrix's contents, he had not been involved with any previous courtesy calls to outside agencies and, since he did not refer to the guidance document, he did not realize there are additional notifications required when an outside agency is contacted.

MEKP Canister Causes

The root cause (RC-02) was the criteria for what constitutes significant operational issues is not well defined and is left open to interpretation. The event type "significant operational issues" contains a note prompting the user to contact the on-call FR if the facility manager is notified. Shift managers interpret significant operations issues to be along the line of requiring outside help.

The direct cause (DC) was the Waste Feed Operations (WFO) shift operations manager (SOM) and WFO operations manager (Ops Mgr) did not consider this event to be a "significant operational issue." Once the Hanford Fire Department had determined the canisters did not pose a threat to personnel or the facility, it was treated as a false alarm, which doesn't require any notifications per the WFO/CO Event Notification Matrix.

A contributing cause (CC-01) was the SOM and Ops Mgr wanted to first determine if a hazardous condition actually existed or it was a false alarm.

2704-HV Electrical Cart Causes

The root cause (RC-02) was the criteria for what constitutes significant operational issues is not well defined and is left open to interpretation. The event type "significant operational issues" contains a note prompting the user to contact the on-call FR if the facility manager is notified. Shift managers interpret significant operations issues to be along the line of requiring outside help.

The direct cause (DC) was the CO SOM failed to review procedure TFC-OPS-OPER-C-24, *Occurrence Reporting and Processing of Operations Information*. The CO SOM failed to recognize that since this event was being considered under the "Near Miss" category, a review of procedure TFC-OPS-OPER-C-24 was warranted to determine if reports to the on-call FR were required.

A contributing cause (CC-02) was the SOM and Ops Mgr thought that this event could possibly fall under the reporting category of "Near Miss" but wanted to wait until after the Fact Finding to determine if this was a reportable event.

A second contributing cause (CC-03) was the Ops Mgr assumed that the on-call FR had been contacted since the SOM was in contact with the Defense Nuclear Facilities Safety Board (DNFSB) Representative.

1.2 Corrective Actions

Corrective actions taken to address the causes of this concern include:

- Upgrading the event notification guidance document to a procedure in order to formally address the DOE-ORP expectation of timely notification (within 30 minutes) of selected events or issues.
- Revising the event notification matrix to provide clear, unambiguous criteria for "significant operational issue" in order to ensure the on-call FR is notified in a timely manner.
- Verification of understanding of the changes to the event notification process and the need for timeliness of notifications through face-to-face discussions between Operations Directors and personnel implementing the notification process.
- Updating the event notification matrices to ensure each of the selected events and issues requiring notification to DOE-ORP are specifically identified in order to minimize confusion and interpretation.

2.0 PROBLEM STATEMENT

Requirements for notification to the Facility Representative for operational events not met.

3.0 BACKGROUND

Event notification direction was first introduced on September 21, 2001, via management directive RPP-MD-077 (Rev 0), *Event Notification*. Its purpose was to consolidate the multitude of sources defining notification requirements into one resource that Central Command and Control personnel could use to ensure proper notifications of various events (e.g., operational emergencies, unusual occurrences, personnel injuries, environmental spills, etc.) were made.

On February 22, 2002, RPP-MD-0771 was revised (Rev 0c) adding "significant operational issues[1]" as an event type. This event type was added to ensure Central Command and Control staff also notified key personnel when notifying the applicable facility manager of issues concerning the facility for which they had cognizance. These key personnel included the Senior Vice President of Operations, the Deputy Vice President of Operations, and the On-Call ORP Facility Representative.

On June 3, 2002, RPP-MD-077 Rev 0c was transitioned to a guidance document and issued as TFC-OPS-OPER-D-01 (Rev A), *Event Notification*. Though there were some format changes due to the requirements for guidance documents, the content remained relativity unchanged. The available Administrative Document Change Authorization documented two reasons for change as being; (1) Guidance document is the preferred format and (2) To be in compliance with personnel changes and responsibilities. The revised matrix did not change the event type "significant operational issues" or contacting the Applicable Facility Director and the on-call FR.

On May 16, 2003, TFC-OPS-OPER-D-01, *Event Notification*, was revised (Rev B-1) as CH2M HILL, completing MAP (Mission Alignment Process), realigns organizationally abandoning the Central Command and Control structure. Although notification responsibilities are placed on Waste Feed Operations Shift Operations, the event type "significant operational issues," its accompanying note, and notification to the on-call FR survived and has remained unchanged through the current version B-27 effective October 12, 2007.

The ORP Facility Representative's weekly report for week ending October 4, 2007, identified weaknesses with regard to notification of the on-call FR as identified in the *Event Notification* guidance document TFC-OPS-OPER-D-01. The report cites the following three events as having met the "significant operational issues" threshold and thus should have prompted notification to the on-call FR.

- On 10-2-2007, an electrical cart fell off the 2704-HV roof during high winds, landing in an area frequently occupied by personnel. This incident was not reported to either the cognizant or the Alternate (on-call) Facility Representative (FR). The FRs did not learn of this incident until the next morning when it was discussed in the work release meetings. This incident was ultimately reported as a group 10(3) SC3 (Near Miss) occurrence report. The failure to promptly notify the FR of this issue is especially troubling considering three other notification issues that were discussed in two findings issued during the month of September. The citations were

[1] The matrix defined significant operational issues as those that may not be reported under other categories, or other abnormal events, that would reach a threshold to notify the Facility Manager.

against the procedural requirements of TFC-OPS-OPER-D-01, Event Notification. In addition to identifying errors in notification, this trend indicates ineffective corrective actions to previously-identified ORP Findings.

[CONCERN: The TFC Failed to Ensure the Requirements for Notification of the Facility Representatives for Operational Events Were Met. (Williamson, 10-3-07)]

- On September 4, 2007 at approximately 9:15 am the 222S Building 219 Sump No. 9 activated. Sump No. 9 was part of the secondary containment for 219-S Tank 104 that receives radioactive waste from several laboratory sinks. On September 6, 2007, CH2M HILL Hanford Group, Inc. made a courtesy call to the Washington State Department of Ecology to notify them of the event and the fact the sump pump would not start when operations attempted to start it. Procedure TFC-OPS-OPER-D-01, Event Notification, requires notification of the on-call Facility Representative (FR) when a courtesy call/outside agency notification is made and for significant operational issues; yet on September 6, 2007 the on-call FR was not called. (Ref: CH2M-PER-2007-1623)

  [FINDING: The on-call Facility Representative was not informed of an event at the 222-S Laboratory. (Blanchard, 9/14/07)]

- An event occurred on 9/18/07 involving the TFC's construction subcontractor, Fluor Government Group (FGG), during chemical inventory of a Conex box. Three one-gallon containers of MEK Peroxide were discovered which are potentially shock sensitive. One had been opened previously and the other two were unopened. They had been there since 2002. The Shift Manager made a 911 call and the Hanford Fire Department responded. Access to the Conex box was barricaded and restricted for 100 feet around. After consulting with the vendor, HFD and Waste Services performed a visual inspection to ascertain if the MEK was stratified, indicating off-gassing and in a potentially explosive state. They determined that this was not the case and the containers were in a safe condition. The containers remain in the Conex box pending disposal. This event constitutes significant operational issue that warrants a timely call to the on-call FR, as required by TFC-OPS-OPER-D-01, but this was not done. This follows an incident that occurred on September 1 where leakage of tank waste was identified on the floor of the 242-A evaporator pump room. TFC management was notified but the on-call FR was not notified until two days later. (Ref: CH2M-PER-2007-1675)

  [FINDING: The on-call Facility Representative was not informed of a significant event involving the TFC's construction subcontractor (Sorensen, 9/19/07)]

4.0 CAUSE STATEMENT

The analysis of the root causes of the Concern issued by the ORP FR resulted in two root causes, one direct cause, and three contributing causes.

4.1 Root Cause

There were two root causes associated with ORP issuing a Concern.

Root Cause (RC-01) – Incorrect performance due to mental lapse (A3B1C03)

The ATS FOM failed to refer to guidance document TFC-OPS-OPER-D-01, *Event Notification*, which would have led him to the determination that a courtesy call to an outside agency required notification of the on-call FR.

Root Cause (RC-02) – Ambiguous instructions/requirements (A5B2C05)

Guidance document TFC-OPS-OPER-D-01, *Event Notification*, requires notification of the on-call FR of "significant operational issues." The criteria for what constitutes significant operational issues is not well defined and is left open to interpretation. As such, both Closure Operations (CO) and WFO shift managers did not believe the MEKP (false alarm) and discovery of the utility cart at 2704-HV (no immediate risk to personnel) represented significant operational issues.

4.2 Direct Cause

Direct Cause – Incorrect performance due to mental lapse (A3B1C03)

The ATS FOM failed to refer to guidance document TFC-OPS-OPER-D-01, *Event Notification*, which would have led him to the determination that a courtesy call to an outside agency required notification of the DOE on-call FR.

The WFO SOM and WFO Ops Mgr failed to recognize that this event should be considered as "significant operational issues" in accordance with the guidance provided by Note 2 for the WFO/CO Event Notification Matrix (TFC-OPS-OPER-D-01, Figure 1) since notification was made to the facility manager (operations manager).

The CO SOM failed to recognize that since this event was being considered under the "Near Miss" category, a review of procedure TFC-OPS-OPER-C-24, *Occurrence Reporting and Processing of Operations Information*, was warranted to determine if reports to the on-call FR were required.

4.3 Contributing Causes

CC-01 – Wrong action selected based on similarity with other actions (A3B1C06)

The WFO SOM and Ops Mgr made a decision not to notify the on-call FR until after it was determined if this was a false alarm or if a hazardous condition actually existed. The facility does not regularly notify the on-call FR about false alarms. Procedure TFC-OPS-OPER-C-24, *Occurrence Reporting and Processing of Operations Information*, specifically exempts activation of the Incident Command System for "false indicators or personnel illnesses."

CC-02 – Situation incorrectly identified or represented resulting in wrong rule used (A3B2C05)

The CO SOM and Ops Mgr thought that the 2704-HV utility cart event could possibly fall under the reporting category of "Near Miss" but wanted to wait until after the Fact Finding to determine if this was a reportable event. Procedure TFC-OPS-OPER-C-24, *Occurrence Reporting and Processing of Operations Information*, section 4.0 states "Upon identification of an abnormal or suspected abnormal event or condition, facility personnel are required to categorize the occurrence, notify DOE, as required, and prepare and submit occurrence reports." Section 4.1.2 states "Conservative decisions must be made on filing an occurrence report within two hours of discovery with the exception of Operational Emergencies (see Figure 1). The TFC must respond rapidly to events and perform timely categorizations, even if the reports are canceled later in the process after all the facts are determined."

CC-03 – Omission/repeating of steps due to assumptions for completion (A3B1C07)

The CO Ops Mgr assumed that the on-call FR had been contacted about the 2704-HV utility cart since the SOM was in contact with the Defense Nuclear Facilities Safety Board (DNFSB) Representative.

5.0 EXTENT OF CONDITION

The extent of condition review assesses the transportability of the direct causes to other activities. The activities associated with the concern for which this analysis was performed relate to the timely notification of FR of significant operational issues.

Notification of the on-call FR in a timely manner is critical to ensuring that the customer is kept informed of the on-going status of significant operational issues at tank farm facilities. Such notification is intended to: 1) provide the opportunity for the on-call FR to review the categorization; 2) provide recommendations for inclusion of data or information to reduce follow-up inquiries from DOE

Headquarters; and 3) provide the opportunity for FRs to participate in initial field investigation efforts.

In order to determine the extent of condition, two methods of analysis were used. The first was a search of the PER database looking for records containing either "RPP-MD-077" or "TFC-OPS-OPER-D-01" within the description of concern or problem. This search revealed 20 records that met one or more of these criteria. The second method of analysis was a review of the operating log books for WFO, CO, and ATS to determine if there were additional instances of significant operational events for which tank farm management was notified, but the on-call FR wasn't. This review covered a period of approximately the past six months for each facility.

In addition to the previously identified PERs (CH2M-PER-2007-1623, CH2M-PER-2007-1675, and CH2M-PER-2007-1792), four other PERs were generated between October 2002 and October 2007 that identified a failure to notify the on-call FR in a timely manner. These instances were documented in the following PERs: PER-2002-5430 (Failure to Make Required Notifications); PER-2004-2693 (Notifications Not Made for Fact Finding); CH2M-PER-2007-0965 (ORP Field Rep Notification of Significant Event), and; CH2M-PER-2007-1849 (On-Call Facility Representative Not Informed of 222-S Contamination Event).

The first two instances dealt with a failure to notify the FR about an upcoming critique or event investigation fact finding. In both cases, a misinterpretation of terminology used in the event investigation process was the primary reason the FR wasn't notified. The requirement to use consistent terminology was communicated to all of the shift managers and other personnel involved in the administration of the event investigation process.

The third instance was failure to notify the FR about significant operational issues. The term "significant operational issues" is not clearly defined in the event notification process and is subject to interpretation. The shift manager on duty at the time determined that the event (exceeding Radiation Work Permit (RWP) void limits) didn't meet the occurrence reporting thresholds and sent a page to the FR as well as others. The FR eventually called the SM and inquired as to why he didn't receive a phone call. The SM stated that it wasn't procedurally required for this type of event. After some discussion between the FR and the SM, the SM eventually came to the conclusion that this event would fall under the "significant operational issues" category and that a call to the FR was required.

The fourth instance occurred after the most recent concern identified by ORP was documented in PER CH2M-PER-2007-1792. In this instance, the FOM notified the 222-S Facility Representative about a contamination event, but did not notify the on-call FR. Upon further review it was determined that the guidance provided by ORP regarding event notification (Alternate Facility Representative (AFR)

Duty Assignments letter) stipulated that either the FR for the affected facility OR the duty AFR (on-call FR) was to be notified in a timely manner. This guidance did not stipulate that each had to be notified if they were not the same person. The ORP Facility Representatives Director has since issued a revised duty assignment letter (TOD:MCB 07-TOD-105) to direct the tank farm shift offices to notify the on-call FR whenever notification is required.

The second method of analysis involved a review of operating log books from the three Tank Farm Operations organizations (WFO, CO, and ATS). This review covered a period of approximately the previous six months. The scope of this review was to determine how many times potential significant operational issues were identified and the FR was not notified. For the purposes of this review, the guidance used to determine if an event potentially met significant operational issues threshold was any event that was written in the log book along with documentation that operations management was notified of the event.

Within WFO and CO, there were approximately 60 log entries that met the criteria established above. Of these 60 entries, there were seven occurrences of issues that could have been classified as significant operational issues where management was informed, but not the on-call FR. Within ATS, over the same time frame, there were 24 entries that met the above criteria with more than half of them indicating that management was notified, but not the on-call FR. As it turns out, there is a significant difference between who makes log book entries for ATS and who does it for WFO and CO. At WFO and CO, the SM makes the log book entries. At ATS, log book entries are made by the on duty Lab Leader who reports to the FOM. It is the FOM that makes notifications to the on-call FR and completion of this notification is not always documented by the Lab Leader. Therefore, it isn't possible to determine from the ATS log book whether the on-call FR was notified of an issue or not. However, since the issuance of the concern by ORP, the FOM has been instructed by 222-S operations management to ensure on-call FR notifications are documented in the log book.

Conclusion

As a result of these reviews, it appears the extent of condition is limited to the interpretation of the term "significant operational issues" and that the corrective actions identified to address the root causes of this concern should prevent future occurrences of this problem.

6.0 GENERIC IMPLICATIONS

The generic implications for this concern are twofold, those related to personal implementation weaknesses, and those related to organizational expectations.

Personal performance within the framework of CH2M Hill's Integrated Safety Management System establishes accountability and behavior expectations for all employees. Individual actions that are inconsistent with these expectations are

addressed on a case by case basis. The individual weaknesses that contributed to this concern were evaluated and determined to not be indicative of a broader issue.

The organizational expectations are that the customer, DOE-ORP, will be notified in a timely manner of operational emergencies, reportable occurrences, and other notable events as defined in the letter 06-ESQ-059, CB Reid, U.S. DOE-ORP to MS Spears. For the most part, the categories identified in the event notification matrices in TFC-OPS-OPER-D-01, *Event Notification,* are quite clear as to when the on-call FR must be notified. However, there are a few categories that appear to be ambiguous and leave it to the user to determine if notification of the on-call FR is required or not. The "Significant Ops Issues" category is one that is not well defined and can lead to misinterpretations by the user. It is up to the operations organizations to set the expectation as to what should be considered "significant" and should ensure that notifications are made as required. When it comes to determining if an issue is significant or not, it is better to fail conservatively and report issues that may ultimately be determined to be less than significant, and therefore not reportable, than it is to not report issues that are ultimately determined to be significant and reportable. The corrective actions identified for the root cause should adequately reinforce this organizational expectation.

7.0 SAFETY SIGNIFICANCE

There are no safety significant issues associated with this root cause analysis.

8.0 RECOMMENDED CORRECTIVE ACTIONS

8.1 Immediate Actions Taken

There were no immediate actions taken other than to increase the awareness and sensitivity of the people performing event notification to ensure they properly categorize issues and events, make the appropriate notifications, and document the notification of management and the on-call FR. Shift managers and facility managers were instructed to seek guidance from their management if there was a question as to whether an issue or event was significant and should be reported.

8.2 Corrective Action Plan

CATPR-01	Upgrade guidance document TFC-OPS-OPER-D-01 to a C level procedure in order to formally address the DOE-ORP expectation of timely notification (within 30 minutes) of selected events or issues.
Actionee:	T. Jarecki
Due Date:	December 13, 2007
Deliverable:	Issued TFC-OPS-OPER-C level procedure

CATPR-02-01	Revise the event notification matrix to provide clear, unambiguous criteria for "significant operational issue" in order to ensure the on-call FR is notified in a timely manner.
Actionee:	T. Jarecki
Due Date:	December 13, 2007
Deliverable:	Revision to the WFO/CO and ATS event notification matrices showing an unambiguous criteria for "significant operational issue."

CATPR-02-02	Verify understanding of the changes to the event notification process and the need for timeliness of notifications through face-to-face discussions between Operations Directors and personnel implementing the event notification process. The briefing method will include table top drill format on notification of multiple events.
Actionee:	T. Jarecki
Due Date:	December 21, 2007
Deliverable:	Copy of briefing packages (presentation materials, list of designated personnel, rosters)

DC	This cause will be addressed in corrective actions for CATPR-02-02.
Actionee:	
Due Date:	
Deliverable:	

CC-01	This cause will be addressed in corrective actions for CATPR-02-02.
Actionee:	
Due Date:	
Deliverable:	

CC-02	This cause will be addressed in corrective actions for CATPR-02-02.
Actionee:	
Due Date:	
Deliverable:	

CC-03	This cause will be addressed in corrective actions for CATPR-02-02.
Actionee:	
Due Date:	
Deliverable:	

CA-01	Update the WFO/CO and ATS event notification matrices to ensure each of the selected events and issues requiring notification to DOE-ORP are specifically identified in order to minimize confusion and interpretation.
Actionee:	T. Jarecki
Due Date:	December 12, 2007
Deliverable:	Copy of the revised matrices

EPA-01	Perform an End Point effectiveness assessment to: • Verify completion of actions. • Perform a sampling of personnel and their sensitivity to significant issues and the timeliness of notification.
Actionee:	T. Jarecki
Due Date:	April 30, 2008
Deliverable:	Copy of the revised matrices

9.0 PROBLEM ANALYSIS

The direct and root causes for this concern were determined by developing a timeline of the events leading up to the concern, using event and causal factor charting, and using barrier analysis. The outcome of the analysis is summarized below.

Notifications to on-call Facility Representatives for significant operational issues were not being made in accordance with established event notification criteria. An event notification matrix was available, but some of the categories were ambiguous or open to interpretation and resulted in some issues being erroneously categorized as non-reportable.

Document Review

Several procedures and documents related to event notification were reviewed to determine if adequate guidance was provided to those personnel required to make the determination if an issue/event met reporting thresholds. The following procedures and documents were reviewed:

- Tank Farm Guidance Document TFC-OPS-OPER-D-01, Revision 26, *Event Notification*
- Tank Farm Procedure TFC-OPS-OPER-C-24, Revision B-7, *Occurrence Reporting and Processing of Operations Information*
- Letter 06-ESQ-059, CB Reid, U.S. DOE-ORP to MS Spears, CONTRACT NO. DE-AC27-99RL14047 – REVISION TO EVENT NOTIFICATION DIRECTION TO INFORM US DEPARTMENT OF ENERGY (DOE) OFFICE OR RIVER PROTECTION (ORP)

- Letter 07-TOD-057 R4, Mark Brown, U.S. DOE-ORP to Occurrence Notification Center, et al, *Alternate Facility Representative (AFR) Duty Assignments*

The Event Notification guidance document was developed in order to consolidate the multitude of sources that define notification requirements. Most of the categories identified in the matrix are clear as to when notification to the on-call FR is required. Some of the categories, however, are not well defined and left to the interpretation of the document user. Examples of these categories are Localized Extraordinary Conditions and Significant Ops Issues. Several of the reportable categories covered in Letter 06-ESQ-059 would fall under the definition of Significant Ops Issues. The definition and example provided in Note 2 of the event notification matrices does little to clear up any confusion on the part of the document user.

Another issue with the guidance document is that it is just that, a guidance document. Since this is only a guidance document and not a procedure, ultimately it is up to the training and experience of the person evaluating the issue or event to determine if it is reportable or not. There are a myriad of sources available that identify what requires notification and who to notify. The event notification matrix was developed to aid in this determination. The actual guidance for the types of events and issues when the on-call FR should be notified is provided in the Letter 06-ESQ-059, CB Reid, U.S. DOE-ORP to MS Spears. A review of the event notification matrices indicates that several of the required situations are covered by specific categories in the matrix and that the rest could be reasonably interpreted to fall under the "Significant Ops Issues" category.

Interviews

Interviews were conducted with the various shift and facility operations managers to determine their level of understanding of the requirements to notify the on-call FR for significant operational issues and to identify any issues they might have with the event notification matrix. The following questions were asked of each shift and facility operations manager interviewed:

1. What do you use for guidance to help you determine the significance of an event?
2. Once you determine the significance, how do you determine who to notify?
3. What is your understanding of what constitutes a "significant operational event"?
4. Have you ever used TFC-OPS-OPER-D-01, "Event Notification?" If so, what does Note 2 at the bottom of the matrix mean to you?
5. Do you know what the On-Call list is? Do you know where it is? How often is it updated?

Additionally, several interviewees were asked follow-on questions based on their responses to the initial questions or their involvement with any of the initiating events that led to this concern. The answers to questions #2 and #5 were pretty standard among all of the interviewees. The answers to question #1 varied slightly depending on the level of experience of the interviewee and the facility they worked in. The answers to questions #3 and #5, along with any applicable follow on questions, provided the greatest insight as to the root of this concern. Almost all of the interviewees expressed a concern regarding the subjectivity of the term "significant ops issue" listed in the matrix. Each had a different opinion of what type of issue or event would fall under this category and each had their own opinion as to what they thought the on-call FR would want to be notified about. There also seemed to be some confusion as to what "operational" means. Some thought it applied to actual evolutions involving the start-up, operation, or shut down of facilities, systems, or equipment while others thought it applied to the overall management of the tank farms.

Log Book Reviews

A review of Operational Log Books was conducted to determine if notifications were being made to on-call FRs in accordance with the guidance provided in the event notification matrices. This review focused on log book entries that identified issues or events that were covered by one of the categories in the event notification matrix. This review also looked for issues or events that would have been considered significant operational issues and determine if appropriate notifications were made. The review consisted of identifying issues and events for which tank farm management was notified and determining if the on-call FR was notified, if required. A detailed analysis of this review is discussed earlier in this report in Section 5.0 – Extent of Condition. Again, most of the issues and events where management was notified and the on-call FR wasn't were not specifically categorized in the event notification matrix and would have fallen under the "Significant Ops Issues" heading.

Problem Evaluation Request Review

In order to determine the extent of condition as well as the effectiveness of previous corrective actions, a review of the PER database was conducted. The search criteria for this review consisted of the key words "TFC-OPS-OPER-D-01" and "RPP-MD-077", which was the predecessor to TFC-OPS-OPER-D-01. A total of four PERs were identified, other than those covered by this PER, that identified a concern by a DOE-ORP FR that they hadn't been notified of a significant operational issue. Two of them were related to notification of a fact finding or critique, which is clearly identified in the matrix, one was related to exceeding void levels in an RWP and should have been considered a significant operational issue, and the last one was determined to be not valid based on guidance provided by DOE-ORP related to the on-call FR list. Prior to the events that led to this concern, it appeared that the previous corrective actions for the first two PERs was effective since there didn't appear to be any more similar

instances after 2004. The corrective action for the last PER does not appear to have been effective considering this issue was first raised in May 2007 and there have since been four events which should have been reported to the on-call FR as significant operational issues.

10.0 TIME LINE

The following time line shows the events that ultimately resulted in ORP issuing a Concern regarding notification of the on-call FR for "significant operational issues."

Time Line

September 2001
Management directive RPP-MD-077, *Event Notification*, issued consolidating the multitude of sources defining notification requirements into one resource for use by the Central Command and Control staff.

February 2002
RPP-MD-077, *Event Notification*, revised (Rev 0c) adding "significant operational issues" to inform key personnel in addition to the applicable facility manager of issued within facilities for which they had cognizance.

June 2002
RPP-MD-077 Rev 0c was transitioned to TFC-OPS-OPER-D-01 (Rev A), *Event Notification*. The purpose for the change was because a guidance document was preferred over the management directive format and to be compliant with changes in personnel and responsibilities. The revised matrix did not change the event type "significant operational issues" or its contacts.

May 2003
TFC-OPS-OPER-D-01, *Event Notification*, is revised (Rev B-1) as CH2M HILL, completing MAP (Mission Alignment Process), realigns organizationally abandoning the Central Command and Control structure. Though notification responsibilities are placed on Waste Feed Operations Shift Operations, the event type "significant operational issues," its note, and notification to the on-call FR survived and has remained unchanged through the current version B-27 effective October 12, 2007.

September 2003
TFC-OPS-OPER-D-01, *Event Notification*, is revised (Rev B-2) to add 222-S Lab Facility Operations as a notification point for various events, such as operational emergencies, reportable occurrences, personnel injuries, environmental spills, etc., occurring at the laboratories.

November 2003
TFC-OPS-OPER-D-01, *Event Notification*, is revised (Rev B-3) to add Closure Project as a notification point for various events, such as operational emergencies, reportable occurrences, personnel injuries, environmental spills, etc., occurring within Closure Projects facilities.

June 15, 2006
TFC-OPS-OPER-D-01, *Event Notification*, is revised (Rev B-20) ensuring the 30-minute notifications of the types of events contained in DOE letter 06-ESQ-059 are addressed in the matrices. Previous notification direction to the DOE was provided in DOE letter 04-TOD-052.

September 4, 2007
Approximately 0915 hours, the 219-S building sump leak detection alarm activates. This sump is part of the secondary containment for tank 104 in the 219-S building that receives radioactive waste from laboratory sinks, hoods and hot cells. The leak detection alarm for sump #9 would not reset.

September 6, 2007
Unable to restart the sump pump #9, ATS made a courtesy call to the Washington State Department of Ecology informing them of the alarm and inability to pump. The on-call FR was not notified.

September 14, 2007
ORP Tank Farm Facility Representative Weekly Report for the week ending September 14, 2007, is released with one Finding concerning the sump pump. The Finding cites failure to contact the on-call FR of the courtesy call to Ecology (outside agency) and significant operational issues as required in TFC-OPS-OPER-D-01, *Event Notification*. Problem evaluation request CH2M-PER-2007-1623 was initiated to address this issue.

September 18, 2007
During a chemical inventory of a temperature controlled connex box, Fluor Government Group personnel found 3 one-gallon containers of MEKP which, when aged (containers dated 2002) are potentially shock sensitive if they reach a stratified phase. The Hanford Fire Department, responding to the WFO shift manager 911 call, ultimately determined the MEKP was stable and did not represent an explosion hazard. The on-call FR was not notified.

September 25, 2007
ORP Tank Farm Facility Representative Weekly Report for the week ending September 20, 2007, is released with one Finding concerning discovery of the MEKP. The Finding cites failure to contact the on-call FR of this significant operational issue as required in TFC-OPS-OPER-D-01, *Event Notification*. Problem evaluation request CH2M-PER-2007-1675 was initiated to address this issue.

October 2, 2007
Between 1650 and 1700 hours, the WFO shift manager received a call from an occupant of the 2704-HV building reporting an associate had discovered a destroyed 2-shelf plastic utility cart along with electrical conduit and parts on the northeast end of the building. Peak winds were reported to be 46 miles per hour and it was later determined the cart was blown off the roof. The on-call FR was not notified.

October 3, 2007
After reviewing the results of the fact finding, management determined the cart blowing off the roof met the near miss criteria and categorized it as a reportable occurrence (Ref: EM-RP--CHG-TANKFARM-2007-0012). The on-call FR was notified of the categorization.

October 4, 2007
ORP Tank Farm Facility Representative Weekly Report for the week ending October 4, 2007, is released with one Concern concerning discovery of the destroyed electrical cart. The Concern cited failure to contact the on-call FR of this significant operational issue as required in TFC-OPS-OPER-D-01, *Event Notification*. Problem evaluation request CH2M-PER-2007-1792 was initiated to address this and the previous two issues.

11.0 LESSONS LEARNED

- Timely notification of on-call-FR is not only important from an operational standpoint; it is contractually required as well. It is critical that the customer be kept apprised of significant operational issues so that they can perform their job as well. There are a lot of things that happen behind the scenes that ORP can't take care of when they don't know about a significant issue.

- It is important that personnel categorizing events and making notifications use all of the tools available to them. The event notification process was developed to ensure anyone that might have a stake in a particular event or issue knows about it in a timely manner so that they can begin the process of determining what their next step will be.

- It is always better to report an issue or event and later determine that it wasn't reportable than it is to not report something and figure out later that it should have been reported. Timely reporting not only ensures people with a stake in the issue can begin to address it from their end, it also ensures that our operations and intentions are transparent and that we aren't trying to hide anything.

ATTACHMENT A – PER INTEGRATION TABLE

Host PER			
PER #	Significance Level	Issue Description	Resolution
PER-2007-1792	Sig PER	Requirements for Notification to the Facility Representatives for Operational Events not Met.	Resolution to be determined.
Sub-Tier PERs			
PER-2007-1623	Invalid	ORP On-Call Fac Rep was not informed of an Event at the Labs	This PER was re-screened as invalid; Duplicate; The issue identified in this PER is duplicated word for word in CH2M-PER-2007-1792 which has been recently upgraded to Significant.
PER-2007-1675	Trend Only	Fac Rep Not Informed of a Significant Event Involving FGG chemical inventory of a Connex box	This PER was re-screened as Trend Only. The issue identified in this PER is captured via significant PER CH2M-PER-2007-1792. Therefore, the Root Cause Analysis for PER 2007-1792 and corrective actions will address this issue.
Other PERs			
PER-2007-1849	PIE/CIM	On-Call Facility Representative Not Informed of 222-S Contamination Event	This PER will not be rolled into this analysis. At the time of this event, the guidance provided by ORP stipulated either the FR for the affected facility OR the duty AFR [on-call FR] was to be notified. This has been discussed with the ORP FR Director who has since issued a revised duty assignment letter (07-TOD-105).

Centrali

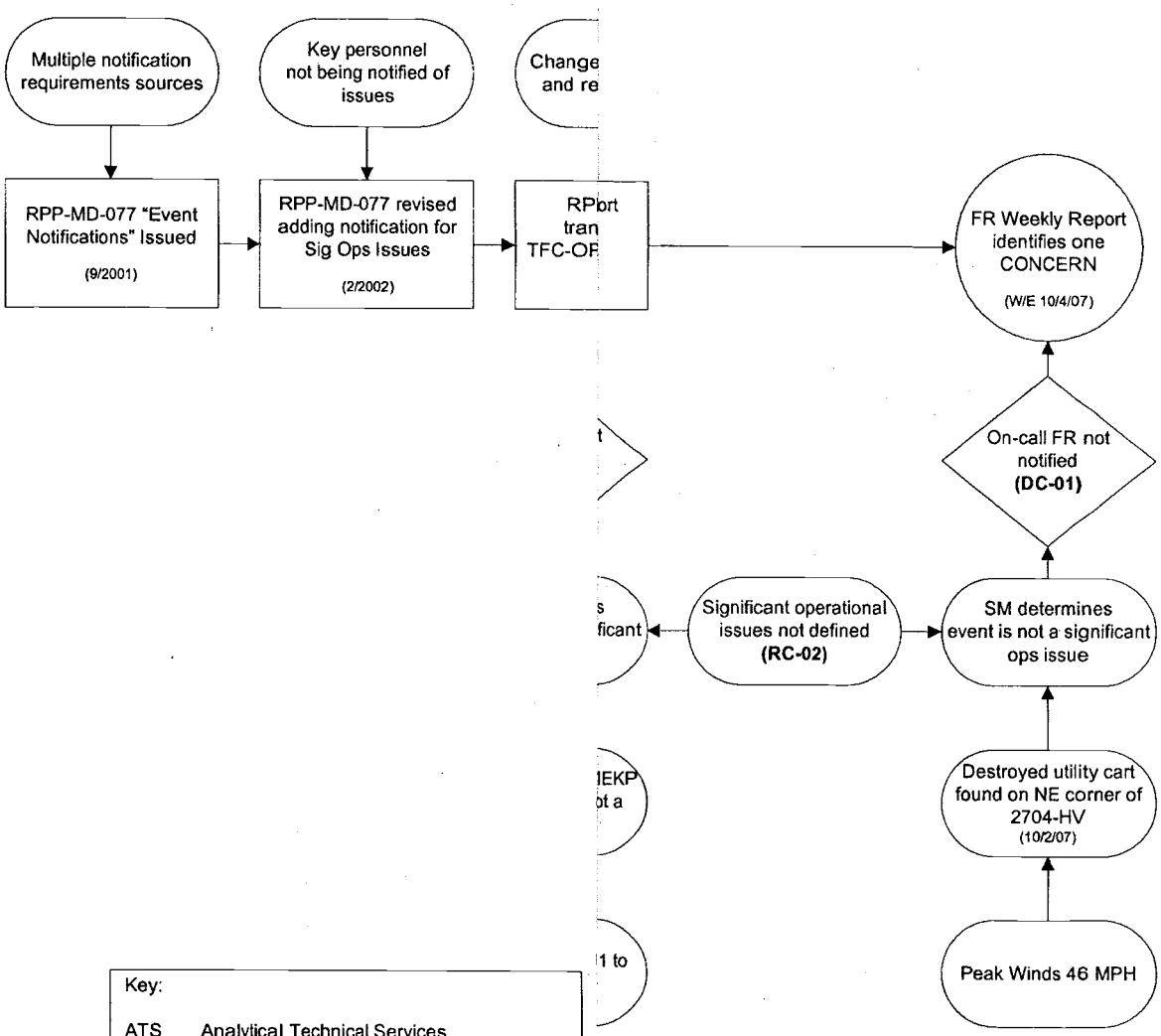

Key:

ATS	Analytical Technical Services
CCC	Central Command and Control
CP	Closure Projects (later Closure Operations)
DOE	U.S. Department of Energy
FGG	Fluor Government Group
FOM	Facility Operations Manager (ATS)
FR	Facility Representative
HFD	Hanford Fire Department
MEKP	Methyl Ethyl Ketone Peroxide
MPH	Miles per hour
ORP	Office of River Protection
RL	Richland Operations
SM	Shift Manager (WFO/CO)
WFO	Waste Feed Operations

ATTACHMENT C – BARRIER ANALYSIS

Barrier	Available	Effective	Analysis
Tank Farm Guidance Document TFC-OPS-OPER-D-01, Revision B-26, *Event Notification.*	Available	Not Effective	The guidance document was an ineffective barrier. The event notification matrices do not clearly define what constitutes "Significant Operational Issues." This determination is left up to the user.
Tank Farm Operating Procedure TFC-OPS-OPER-C-24, Revision B-7, *Occurrence Reporting and Processing of Operations Information.*	Available	Not Effective	The CO Ops Mgr did not ensure the CO SOM had reviewed the occurrence reporting criteria for "Near Miss" applicability and categorize the electrical cart blowing off roof event accordingly.
Building Emergency Director (BED) training and qualification.	Available	Not Effective	The CO SOM failed to recognize that since this event (electric cart blowing off roof) was being considered under the "Near Miss" category, a review of procedure TFC-OPS-OPER-C-24, *Occurrence Reporting and Processing of Operations Information*, was warranted to determine if reports to the on-call FR were required.
Conduct of Operations Training	Available	Not Effective	FOM did not refer to Tank Farm Guidance Document TFC-OPS-OPER-D-01, *Event Notification,* to determine if notifications to the on-call FR are required whenever a courtesy notification is made to an outside agency. FOM relied on his knowledge and familiarity of the contents of the ATS event notification matrix.

ATTACHMENT D – WHY TREE ANALYSIS

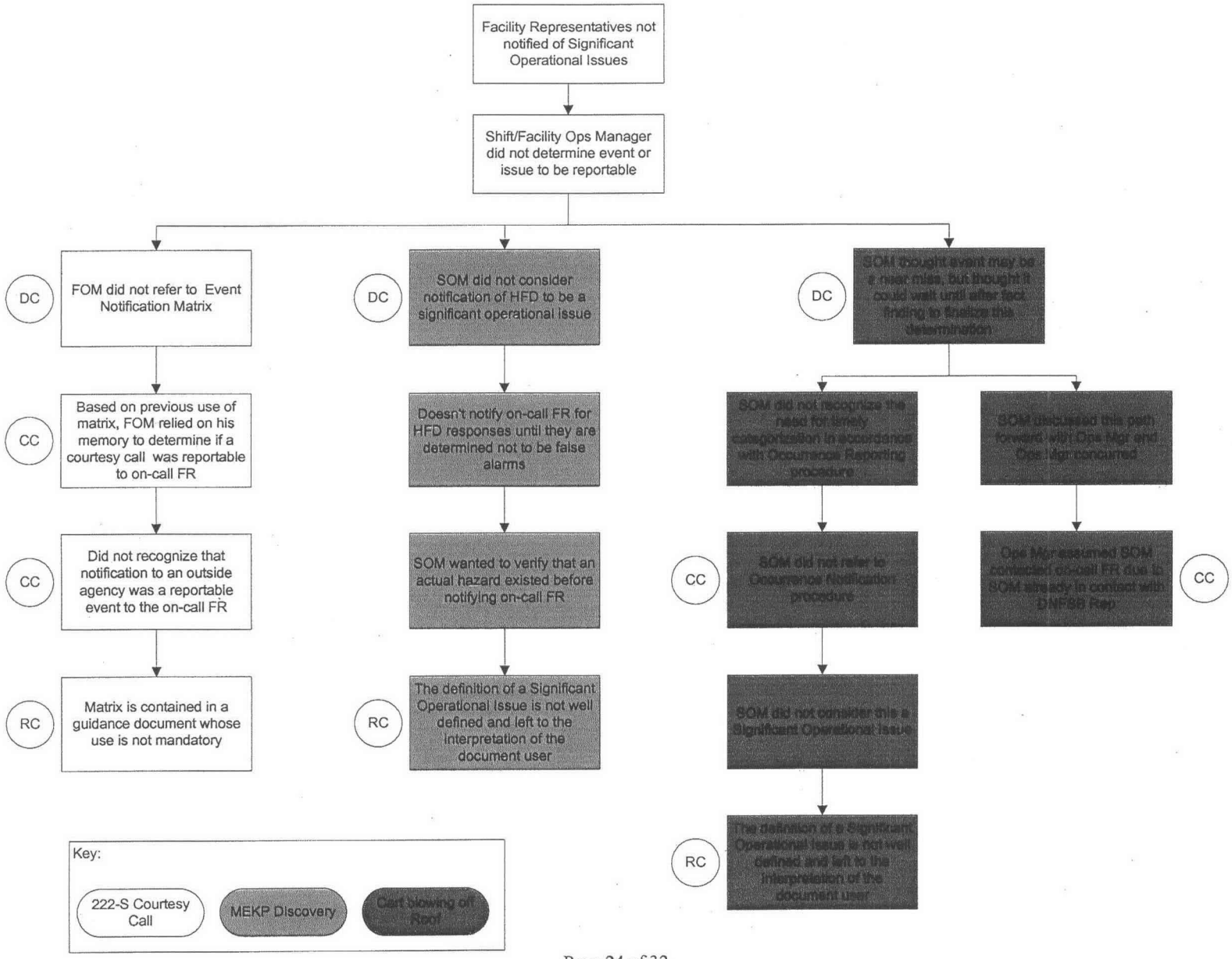

ATTACHMENT E – EXTENT OF CONDITION TABLE

PER database search for RPP-MD-77

PER:	2002-2628	E-STARS:	CH2M-PER-2002-1941	Discovery:	09/30/2002
Description of Concern or Problem					
During a MOP tour looking at EIT's and Notifications I observed two weaknesses 1) Attachment A to RPP-MD-077 "Event Notification Matrix" does not call for notification of the V.P. of Nuclear Operations upon initiation of an EIT as I believe it should. 2) Not all notifications result in positive confirmation that the person got the message (eg pager messages or messages left on phones)and thus the Operations Engineer is left uncertain as to whether his attempts to notify are complete.					

PER database search for TFC-OPS-OPER-D-01

PER:	2002-5365	E-STARS:	CH2M-PER-2002-5093	Discovery:	09/30/2002
Description of Concern or Problem					
The 2002 Biennial USQ Process Assessment, NSL-02-01, identified the following Observation: Procedure TFC-OPS-OPER-D-01, Event Notification, Rev. A-1: the file contains an ADCA form, but there is no indication of a USQ evaluation.					

PER:	2002-5430	E-STARS:	CH2M-PER-2002-5158	Discovery:	10/07/2002
Description of Concern or Problem					
The on-call DOE Fac Rep was not notified of the scheduled critique for the ignition control boundary movement at AZ-101. The problem was discovered 10/4/02, and CCC logbook entry of that date at time 1802 clearly states a critique will be held. A review of the CCC logbook revealed that apparently none of the required notifications were made for this critique, contrary to TFC-OPS-OPER-D-01, REV A-2 (EVENT NOTIFICATION).					

PER:	2002-5510	E-STARS:	CH2M-PER-2002-5243	Discovery:	10/11/2002
Description of Concern or Problem					
While reviewing the new revision of TFC-OPS-OPER-D-01, the following deficiencies were noted in revision A-3, effective as of 10/10/02: 1) The header date still states August 13, 2002 instead of October 10, 2002 and 2) The column for notification of the Occurrence Notification Center has been deleted.					

3) HNF-IP-0842, Volume 9, Section 2.5 is now TFC-ESHQ-S_SAF-C-04 (as of 09/18/02)

PER:	2002-5536	E-STARS:	CH2M-PER-2002-5269	Discovery:	10/14/2002

Description of Concern or Problem

This problem was discovered while making EIT Activation and Off-Normal Occurrence Notifications per TFC-OPS-OPER-D-01 "Event Notification".

The DNFSB representative recently requested to be notified of all critiques. The notification procedure TFC-OPS-OPER-D-01 was revised to include notification to the DNFSB representative of a critique.

PROBLEM: Central Command and Control is not always informed/aware of when and where the Event Investigation Team (EIT) is holding a critique. The EIT/Critique procedure (HNF-IP-0842, Vol II, Section 4.6.4) does not direct the EIT Lead to notify the DNFSB representative of a critique.

PER:	2002-5537	E-STARS:	CH2M-PER-2002-5270	Discovery:	10/14/2002

Description of Concern or Problem

This problem was discovered while making Occurrence Notifications per TFC-OPS-OPER-D-01.

When the notification matrix was revised on 10/10/02, the column for Occurrence Notification Center (ONC) was dropped off of the matrix. There is a potential for people who are making notifications to forget to call ONC now that the reminder is no longer present on the matrix.

PER:	2004-2693	E-STARS:	CH2M-PER-2004-2696	Discovery:	05/13/2004

Description of Concern or Problem

A fact finding meeting was held on 05/12/2004 at 1030 relating to PER-2004-2680, "Constructions sub-contractor working without released work package." The notifications required for initiation of event investigation fact finding were not completed and the initial event investigaition report was not issued in compliance with the CH2MHill Event Investigation Process procedure (TFC-OPS-OPER-C-14).

It appears compliance with these requirements did not occur because the investigation was called "information gathering." Information gathering is not defined in the CH2MHill event investigation process. The lowest level of investigation is defined as fact finding and has specific reporting requirements as defined in TFC-OPS-OPER-C-14 and specific notification requirements as defined in the CH2MHill Notificaiton procedure (TFC-OPS-OPER-D-01).

Because the investigation was called information gathering, the CP shift manager did not make all required notifications for a fact finding meeting and the investigaiton report was not generated and distributed in compliance with the event investigation process.

The most significant missed notifications appear to be the HAMTC safety representative and the on-call ORP representative.

PER:	2004-3411	**E-STARS:**	CH2M-PER-2004-3414	**Discovery:**	06/15/2004

Description of Concern or Problem

During June 2004 MOP, I performed inspection of CP Shift Manager On-Call Book. Following items were observed:

Correct revision of procedure TFC-OPS-OPER-D-01, Rev B-4 was in the book. The Event Notification Matrix (Figure 1) is a phenomenal tool for the on-duty Shift Manager but it is too overcrowded. The fonts on the matrix are extremely small. One page matrix is no longer adequate for the amount of information and notification required. This matrix needs to be divided into two separate pages with appropriate notes for each page.

Each shift office is required to keep the on-call book updated. Inconsistency exists when the on-call list is provided to the shift office from various organizations. It is standard that all personnel start there on-call cycle on Mondays except for Engineering (Technical On-Call) and Environmental on-call. Engineering start their on-call cycle on Tuesday where Environmental start their on-call cycle on Wednesdays. This inconsistency causes the Event Notification Matrix to not to be updated as required. It should be required that each organization start their on-call cycle on Mondays.

Also discovered that telephone numbers provided by two of the on-call personnel is not up-to-date.

PER:	2004-5884	**E-STARS:**	CH2M-PER-2004-5887	**Discovery:**	11/22/2004

Description of Concern or Problem

Shift Manager failed to complete fact finding notifications on 11/18/04. Project manager initiated fact-finding for offsite driver hitting a telephone pole near 277-A including interviews only consistent with TFC-OPS-OPER-C-14. The on-duty WFO Shift Manager failed to recognize that the graded approach for performing a fact-finding without a formal meeting now requires the same level of notifications per TFC-OPS-OPER-D-01. Although the Shift Manager notified the on-call ORP rep., the remaining notifications per TFC-OPS-OPER-D-01 were not completed.

PER:	2005-3154	**E-STARS:**	CH2M-PER-2005-3156	**Discovery:**	08/24/2005

Description of Concern or Problem

On Wednesday, August 24, 2005 there was a Declared Alert Level Emergency at Fluor Hanford's Waste Disposal and Compliance Operations in 200 West that resulted in a Take Cover for all of 200 West. Four items of concern for Tank Farms were identified from this event.

•There is no requirement for CH2M HILL Contractor Representatives to report to the EOC for 200 East or West events that aren't initiated at Tank Farms. Since any event in 200 East or West potentially involves CH2M HILL personnel, the CH2M HILL Contractor Representatives need to be notified and activated for any events involving either 200 East or West.

•Although WFO and CO were in constant communication, 222-S was not taken into account. Since all three organizations are part of CH2M HILL, a process needs to be established to share information during an event.

•The CH2M HILL Contractor Representative worked with both WFO and CO during the event. But there no clear understanding of communication command and control associated with WFO, CO and/or 222-S. This communication process needs to be better documented for future events.

•WFO and CO shift offices both had different sets of shift logs. There needs to be event recorder to keep a comprehensive log of events.

PER:	2005-3604	**E-STARS:**	CH2M-PER-2005-3606	**Discovery:**	09/29/2005

Description of Concern or Problem

An Emergency Preparedness Drill was performed on 9/21/05.
The Emergency Preparedness Post Drill Evaluation was completed on 9/30/05.
Drill Title: Security Event at the 222-S Complex

The following areas for improvement were identified"

Other Areas for Improvement:

The BED did not use the CH2M Hill notification procedure (TFC-OPS-OPER-D-01, Event Notification) and perform the send page actions as directed by the procedure matrix. As per procedure, notification is to be made during an Operational Emergency (emergency action level declaration).

PER / E-STARS:	CH2M-PER-2007-0965	**Discovery:**	05/31/2007

Description of Concern or Problem

A review of the ORP Facility Representative's weekly report dated May 31, 2007 indicated the following weakness:

OBSERVATION -Inadequate Facility Representative Notification of Significant Operational Issue. (Blanchard, 5/31/07)

On May 29, 2007, at 9:30 am the on-call facility representative (FR) received a text message via cellular telephone concerning an operational event associated with work on the C-109 sluice box. The text message stated that the radiological work permit void limits had been exceeded. The text message also stated that the personnel were placed in a safe location. At approximately 10:30 am the on-call FR called the Closure Operations Shift Manager to get more details on the event. During the call the FR asked the shift manager why he was not called on the event. The shift manager explained he had sent the FR a page and a call was not procedurally required for this type of event. Procedure TFC-OPS-OPER-D-01, Event Notification, Figure 1, WFO/CO Event Notification Matrix, requires the shift manager to notify the on-call FRs when there is a Significant Operational Issue. The Manager of Closure Operations agreed with the FR that the shift managers were required to verbally notify the on-call FR and immediately began corrective actions.

A review of the PER database indicated that this specific issue had not been previously identified.

PER / E-STARS:	CH2M-PER-2007-1499	**Discovery:**	08/26/2007
Description of Concern or Problem			
The Emergency Management review of the S-102 event noted a significant delay in sending out the initial "pager" notification for an "abnormal event" per TFC-OPS-OPER-D-01, Event Notification matrix until addtional resources were available in the WFO Shift Office. Given the new "pager" system implemented, this process should be simplified to aid the Shift Manager.			

PER / E-STARS:	CH2M-PER-2007-1500	**Discovery:**	08/26/2007
Description of Concern or Problem			
As a result of the Emergency Management S-102 Event Response Review a significant delay was found in sending out the initial "pager" notification for an "abnormal event" per TFC-OPS-OPER-D-01, Event Notification matrix until additional resources were available in the WFO Shift Office. Given the new "pager" system implemented, this process should be simplified to aid the Shift Manager. Corrective Actions have been provided below.			

PER / E-STARS:	CH2M-PER-2007-1623	**Discovery:**	09/17/2007
Description of Concern or Problem			
A review of the ORP Facility Representative's weekly report dated September 14, 2007			

indicated the following weakness:

FINDING: The On-Call Facility Representative Was Not Informed of an Event at the 222-S Laboratory. (Blanchard, 9/14/07)

On September 4, 2007 at approximately 9:15 am the 222S Building 219 Sump No. 9 activated. Sump No. 9 was part of the secondary containment for 219-S Tank 104 that receives radioactive waste from several laboratory sinks. On September 6, 2007, CH2M HILL Hanford Group, Inc. made a courtesy call to the Washington State Department of Ecology to notify them of the event and the fact the sump pump would not start when operations attempted to start it. Procedure TFC-OPS-OPER-D-01, Event Notification, requires notification of the on-call Facility Representative (FR) when a courtesy call/outside agency notification is made and for significant operational issues; yet on September 6, 2007 the On-Call FR was not called.

A review of the PER database indicated that this specific issue had not been previously identified.

PER / E-STARS:	CH2M-PER-2007-1675	**Discovery:**	09/25/2007

Description of Concern or Problem

A review of the ORP Facility Representative's weekly report dated September 20, 2007 indicated the following weakness:

Finding: The On-Call Facility Representative Was Not Informed of a Significant Event Involving the TFC's Construction Subcontractor (Sorensen 9/19/07)

An event occurred on 9/18/07 involving the TFC's construction subcontractor, Fluor Government Group (FGG), during chemical inventory of a Conex box. Three one-gallon containers of MEK Peroxide were discovered which are potentially shock sensitive. One had been opened previously and the other two were unopened. They had been there since 2002. The Shift Manager made a 911 call and the Hanford Fire Department responded. Access to the Conex box was barricaded and restricted for 100 feet around. After consulting with the vendor, HFD and Waste Services performed a visual inspection to ascertain if the MEK was stratified, indicating off-gassing and in a potentially explosive state. They determined that this was not the case and the containers were in a safe condition. The containers remain in the Conex box pending disposal. This event constitutes a significant operational issue that warrants a timely call to the on-call FR, as required by TFC-OPS-OPER-D-01, but this was not done. This follows an incident that occurred on September 1 where leakage of tank waste was identified on the floor of the 242-A evaporator pump room. TFC management was notified but the on-call FR was not notified until two days later.

A review of the PER database indicated that this specific issue had not been previously identified.

PER / E-STARS:	CH2M-PER-2007-1792	Discovery:	10/09/2007

Description of Concern or Problem

A review of the ORP Facility Representative's weekly report dated October 4, 2007 indicated the following weakness:

CONCERN: The TFC Failed to Ensure the Requirements for Notification of the Facility Representatives for Operational Events Were Met. (Williamson 10-3-07) - On 10-2-2007, an electrical cart fell off the 2704-HV roof during high winds, landing in an area frequently occupied by personnel. This incident was not reported to either the cognizant or the Alternate (on-call) Facility Representative (FR). The FRs did not learn of this incident until the next morning when it was discussed in the work release meetings. This incident was ultimately reported as a group 10(3) SC3 (Near Miss) occurrence report. The failure to promptly notify the FR of this issue is especially troubling considering three other notification issues that were discussed in two findings issued during the month of September. The citations were against the procedural requirements of TFC-OPS-OPER-D-01, Event Notification. In addition to identifying errors in notification, this trend indicates ineffective corrective actions to previously-identified ORP Findings.

The following previously-identified findings document the aforementioned notification failures:

• Finding: The on-call Facility Representative was not informed of an event at the 222-S Laboratory. (Blanchard, 9/14/07)

On September 4, 2007 at approximately 9:15 am the 222S Building 219 Sump No. 9 activated. Sump No. 9 was part of the secondary containment for 219-S Tank 104 that receives radioactive waste from several laboratory sinks. On September 6, 2007, CH2M HILL Hanford Group, Inc. made a courtesy call to the Washington State Department of Ecology to notify them of the event and the fact the sump pump would not start when operations attempted to start it. Procedure TFC-OPS-OPER-D-01, Event Notification, requires notification of the on-call Facility Representative (FR) when a courtesy call/outside agency notification is made and for significant operational issues; yet on September 6, 2007 the On-Call FR was not called.

• Finding: The on-call Facility Representative was not informed of a significant event involving the TFC's construction subcontractor (Sorensen 9/19/07)

An event occurred on 9/18/07 involving the TFC's construction subcontractor, Fluor Government Group (FGG), during chemical inventory of a Conex box. Three one-gallon containers of MEK Peroxide were discovered which are potentially shock sensitive. One had been opened previously and the other two were unopened. They had been there since 2002. The Shift Manager made a 911 call and the Hanford Fire Department responded. Access to the Conex box was barricaded and restricted for 100 feet around. After consulting with the vendor, HFD and Waste Services performed a visual inspection to ascertain if the MEK was stratified, indicating off-gassing and in a potentially explosive state. They determined that this was not the case and the containers were in a safe condition. The containers remain in the Conex box pending disposal. This event constitutes a significant operational issue that

warrants a timely call to the on-call FR, as required by TFC-OPS-OPER-D-01, but this was not done. This follows an incident that occurred on September 1 where leakage of tank waste was identified on the floor of the 242-A evaporator pump room. TFC management was notified but the on-call FR was not notified until two days later.

A review of the PER database indicated that this specific issue had not been previously identified.

PER / E-STARS:	CH2M-PER-2007-1849	**Discovery:**	10/22/2007

Description of Concern or Problem

A review of the ORP Facility Representative's weekly report dated October 18, 2007 indicated the following weakness:

NON-CITED FINDING - On-Call Facility Representative Not Informed of 222-S Contamination Event (Blanchard, 10/15/07)

Requirement: TFC-OPS-OPER-D-01, "Event Notification", requires notification of the on-call FR for significant operational issues.

Discussion: On October 15, 2007 at approximately 10:45 am a Sampling Custodian identified that his personal shoe was contaminated while exiting Room 4 QR. Room 4 QR was a Radiation Buffer Area (RBA) that required a hand and foot survey when exiting into the 222-S Laboratory's East hallway. The Sampling Custodian immediately notified a Radiological Control Technician (RCT) who identified a contamination speck of 40,000 disintegrations per minute (dpm) beta-gamma, no alpha on the RCT's left shoe. The Facility Operations Manager (FOM) isolated the path the sampling custodian had taken from exterior door 13 to Room 4 QR and requested RCTs to perform radiological surveys. This path included a survey along the north side of 222-S. No additional contamination was identified. At approximately 1:30 pm the FOM notified the 222-S Laboratory FR but the On-Call FR was not notified. This is another example that supports the October 3, 2007, CONCERN, "The TFC failed to ensure the requirements for notification of the FRs for operational events were met".

A review of the PER database indicated that this specific issue had not been previously identified.

Timely Notification to DOE Facility Reps

Corrective Action for WRPS-PER-2008-0088.1

12/04/2008

History

- The DOE Facility Representative (Fac Rep) was not notified about a phone call from WRPS Environmental to Washington Dept. of Ecology (WDOE).
- Due to a late environmental surveillance, the SM notified WRPS Env, who in turn stated that they would perform an informal notification that evening and a formal notification in the morning.
- The SM did not notify the DOE on-call Fac Rep since the notification was “informal”. He expected the Fac Rep would be notified when the formal notification was made to WDOE.

Analysis

- The Shift Manager incorrectly interpreted the notification requirements of TFC-OPS-OPER-CD-01, Event Notification, for notifications to outside agencies to only apply to formal notifications.
- The event notification procedure does not distinguish between formal and informal notifications and, as such, any notification to an outside agency should be reported in accordance with the notification matrix.
- The DOE Fac Rep should have been notified as soon as the Shift Manager was informed that any type of notification was going to be made.

Remedial Actions

- The affected Shift Manager was briefed on the importance of notifying the Fac Rep anytime a notification was made to an outside agency, whether formal or informal.
- The Environmental on-call person was informed that the type of notification was irrelevant and that any notification to an outside agency was to be reported to DOE.

Corrective Actions

- A formal briefing is to be provided to all incumbent Shift Managers regarding the importance of timely notifications to the DOE on-call Fac Reps.
- An information bulletin will be issued to all qualified Shift Managers/OEs outlining the expectation that all notifications to outside agencies be reported to the DOE on-call Fac Rep.

TFC - ACTIVITY COMPLETION ROSTER

TFC RECORDS USE ONLY

Activity Number:	Activity Title:	Date Completed:
N/A	Timely Notification to DOE Facility Reps	12/04/2008
Dept. ID if Applicable:	**Location:**	**Date Entered Into ATS:**
TEJ10000	2440 Stevens Center Blvd, Rm 1200	N/A

NOTE: IN ORDER TO OBTAIN CREDIT FOR THIS ACTIVITY, FILL OUT THE FORM ACCURATELY:
1. Print Name in format LAST, FIRST, MI (unless name is already provided). Illegible name/HID will not be processed for completion.
2. Sign Name in INK and provide requested information.

	Hanford ID (HID) or Payroll Number	Print Name (Last, First, MI)	Signature	Company	Job Position (e.g., Manager, NCO, Technical Specialist, Construction Electrician)
1	H0013282	Anderson, Rick A.		WRPS	Senior Shift Manager - B
2	H0078933	Andrews, Jeffrey E.		WRPS	Senior Shift Manager - D
3	H0008224	Garrett, Mark S.		WRPS	Shift Manager - Wk Rel
4	H0017731	Gilles, Dave		WRPS	Shift Manager - T
5	H0001919	Harrison, Dale		WRPS	Shift Manager - C
6	H0078950	Higham, Dale B.		WRPS	Shift Manager - D
7	H0003531	Johnson, Brian A.		WRPS	Senior Shift Manager - C
8	H0046222	Malhan, Rajiv		WRPS	Shift Manager - Wk Rel
9	H0046812	Malhan, Rakesh		WRPS	Shift Manager - A
10	H0075556	Strasser, David W.		WRPS	Senior Shift Manager - T
11	H0076461	Treadway, Phil L.	P. Treadway	WRPS	Shift Manager - B
12	H0099480	Wallgren, Carl B.		WRPS	Senior Shift Manager - A
13					
14					
15					
16					
17					

Activity Point of Contact (Printed/Signature):	Authenticator's Name (Printed/Signature):	Date/MSIN:
Pete Owen	Pete Owen	12/4/08

INSTRUCTIONS/COMMENTS:

Complete a formal briefing to all incumbent Shift Managers regarding the importance of timely notifications to the DOE on-call Fac Reps. (WRPS-PER-2008-0088.1)

DISTRIBUTION: ORIGINAL TO TFC TRAINING RECORDS, S7-95.

A-6003-948 (02/05)

Course # 350147 - TANK FARM OPS ENGINEER

and/or course # 350145

Report generated on 12/22/08

If the background color of a line is YELLOW, the person is within 90 days of being delinquent.
If the background color of a line is RED, it indicates that the person is delinquent on the cert.

Employee Name	Course #	Completion	Delinquency
Allen,Clyde P	350147	10/30/2007	10/30/2009
Anderson,Kenneth J	350147	04/14/2008	04/14/2010
Anderson,Rick A	350147	05/12/2008	05/12/2010
Andrews,Jeffrey E	350147	08/02/2007	08/02/2009
Ardamica,Thomas R	350147	07/05/2007	07/05/2009
Carlile,Dave L	350147	05/16/2007	05/16/2009
Crockett,David A	350147	03/28/2008	03/28/2010
Davis,Glenda M	350147	12/20/2006	12/20/2008
Forsman,Nancy L	350147	07/05/2007	07/05/2009
Garrett,Mark S	350147	08/02/2007	08/02/2009
Gilles,David A	350147	03/20/2007	03/20/2009
Gutierrez,Richard V	350147	10/11/2007	10/11/2009
Harrison,W Dale	350147	10/09/2008	10/09/2010
Higham,Dale B	350147	01/17/2007	01/17/2009
Hopkins,Gary P	350147	10/03/2007	10/03/2009
Hurson,Patrick J	350147	03/31/2008	03/31/2010
Jarecki,Theodore D	350147	06/20/2008	06/20/2010
Johnson,Brian A	350147	03/29/2007	03/29/2009
Malhan,Rajiv	350147	04/10/2008	04/10/2010
Malhan,Rakesh	350147	05/08/2007	05/08/2009
Niebuhr,Daniel P	350147	10/16/2008	10/16/2010
Parnell,William L	350147	09/28/2007	09/28/2009
Raven,Rebecca P	350147	10/16/2008	10/16/2010
Ravencraft,Treta K	350147	03/29/2007	03/29/2009
Reichmuth,Curtis R	350147	08/28/2008	08/28/2010
Ringo,Steven D	350147	09/25/2007	09/25/2009
Saueressig,David J	350147	11/12/2008	11/12/2010
Smith,Kelly M	350147	04/16/2008	04/16/2010

Strasser,David W	350147	01/22/2008	01/22/2010
Taylor III,Willis H	350147	06/20/2007	06/20/2009
Treadway,Phillip L	350147	12/10/2007	12/10/2009
Walker,Lewis M	350147	10/16/2008	10/16/2010
Wallace,Bennett L	350147	12/13/2006	12/13/2008
Wallgren,Carl B	350147	02/12/2007	02/12/2009
Woehle,Christopher P	350147	07/09/2007	07/09/2009

Shift Operations Information Bulletin

As a corrective action for several PERs, this Information Bulletin is being sent to all qualified Operations Engineers. As a qualified OE, each of you has the potential and responsibility for implementing the corrective actions outlined for each of these incidents, particularly when acting as the Shift Manager.

RESPONSE TO ALARMS

History

Recently, there have been several unplanned shutdown of Tank Farm exhausters. The response to these alarms has been inconsistent. On several occasions, radiological sweeps were not performed prior to re-entry into the affected farms. WRPS-PER-2008-0085 was written to address the failure to have these sweeps performed.

Analysis

A Fact Finding session was conducted on 10/27/08. It was determined that 5 shutdowns occurred over a 9 day period. The Alarm Response Procedures (ARPs) were reviewed and several inconsistencies were identified. It was also determined that even though several alarms come in on a loss of ventilation, not all ARPs were used. This resulted in missing the steps to perform a radiological sweep of the farm prior to re-entry.

Remedial and Corrective Actions

A Shift Instruction was issued that directed the Shift Managers to:

- Review the Alarm Response Procedures (ARPs) associated with a loss of primary ventilation in each tank farm. Remember, there may be several alarms as a result of a loss of primary ventilation.
- Ensure all of the required actions for each valid alarm are completed.
- Additionally, before restoring general access to the affected farm, ensure that the farm has been surveyed/monitored/swept by both an IHT AND an HPT.
- Brief your shift personnel on these requirements so that they know to review all applicable ARPs on a loss of primary ventilation."

An additional corrective action was to put together a team to review and revise all Tank Farm ARPs so that they reflect only those alarms that are valid. This team has started this process and expects to have all ARPs revised by early summer 2009.

TIMELY NOTIFICATION TO DOE FACILITY REPS

History

The DOE Facility Representative (Fac Rep) was not notified about a phone call from WRPS Environmental to Washington Dept. of Ecology (WDOE). Due to a late environmental surveillance, the SM notified WRPS Environmental, who in turn stated that they would perform an informal notification that evening and a formal notification in the morning. The SM did not notify the DOE on-call Fac Rep since the notification was "informal". He expected the Fac Rep would be notified when the formal notification was made to WDOE. This issue was documented in WRPS-PER-2008-0088.1.

Analysis
The Shift Manager incorrectly interpreted the notification requirements of TFC-OPS-OPER-CD-01, Event Notification, for notifications to outside agencies to only apply to formal notifications. The event notification procedure does not distinguish between formal and informal notifications and, as such, any notification to an outside agency should be reported in accordance with the notification matrix. The DOE Fac Rep should have been notified as soon as the Shift Manager was informed that any type of notification was going to be made.

Remedial and Corrective Actions
The affected Shift Manager was briefed on the importance of notifying the Fac Rep anytime a notification was made to an outside agency, whether formal or informal. The Environmental on-call person was informed that the type of notification was irrelevant and that any notification to an outside agency was to be reported to DOE. A formal briefing was provided to all incumbent Shift Managers regarding the importance of timely notifications to the DOE on-call Fac Reps.

EXPECTATION FOR TASK COMPLETION FOLLOW-UP

History
As a result of HPT weekly routines not being completed in several SST farms, the Shift Office was notified to post the affected farms as "not routinely surveyed". Later, upon investigation, it was noticed that several of the signs were incorrect and many areas were not posted at all. The Daily Report on Monday listed the farms as "Open" when they should have been listed as "Closed" until the weekly surveys were completed. This issue was documented CH2M-PER-2008-1447.1

Analysis
The apparent cause of this problem was a failure by the Shift Manager to follow-up on the completion of the installation of the required postings. An entry was made in the shift log that notification was received that the routines would not be completed in time and that the affected farms needed to be posted in accordance with TFC-ESHQ-RP_MON-P-10, "Required Radiological Surveillances", section 4.4.3. There wasn't any follow up entry that the postings had been completed. Actions taken to ensure personnel safety should be verified and documented in the Shift Log when they are complete.

Remedial and Corrective Actions
No remedial corrective actions were required. The required weekly routines were completed and the restricted access removed. One-on-one guidance was provided to the regularly assigned Senior Shift Managers and Shift Managers as to the importance of providing clear instructions and following up on those instructions.

Message

From: Livesey, Lee M

Sent: Thursday, May 07, 2009 12:41 PM

To: ^WRPS Corrective Action Group

Cc: Rolph, James T; Livesey, Lee M

Subject: Extension Request WRPS-PER-2008-0078.1

Please extend the action identified in e-stars action WRPS-PER-2008-0078.1 below until 07/30/2009 .

Action 1: Document delivery of the initiative to develop a consistent methodology for the determination of transferrable contamination in outdoor areas among contractors to the Hanford Site Radiological Control Forum. Evidence of completion will be via Hanford Site Radiological Control Forum Meeting Minutes. Responsible person: Lee Livesey

The development of the consistent methodology has been delayed to include the results of Surveillance Number: S-09-SED-FHI-008, "Biological Control Program, WIDS, and the environmental monitoring program". Presentation and concurrence regarding the development of a consistent methodology described above will be performed upon completion of this DOE/RL report.

Lee

Save

Problem Evaluation Request (PER)

WRPS-PER-2008-0089
Closed 10/21/2008 13:45

PER No	Date of Discovery	Time of Discovery (24:00)	Project
WRPS-PER-2008-0089	10/16/2008	15:10	Radcon-BO

Location

272AW

How Was Problem Discovered

Routine Work

Description of Concern or Problem

Work Order TFC-WO-08-1278 found air sampler (AS) 272AS028 (AS028) to be out of tolerance (OOT) on four ranges during its routine calibration performed on 9/10/2008. AS028 was found to read 4.32 cfm with an acceptable range of 4.5 to 5.5 cfm, 3.51 cfm with an acceptable range of 3.6 to 4.4 cfm, 2.66 cfm with an acceptable range of 2.7 to 3.3, and 1.74 cfm with an acceptable range of 1.8 to 2.2 cfm. Therefore, AS028 may have collected other than the anticipated amount of air/radioactive particulates and could have mis-estimated the actual airborne radioactive concentration present at the sample location.

Requirement Not Satisfied	Source Document Number

Equipment Identification Number	System Identification
272AS028	

Immediate actions Taken or Planned

AS028 was recalibrated and returned to service.
Base Ops RadCon management was notified.
An evaluation of the impact of the use of AS028 in an OOT condition was completed.
PER was initiated to document the OOT condition of AS028.

Evaluation Performed:
AS028 was last calibrated on six months ago as indicated on the supplied calibration documentation to +/- 10% of the conventionally true value (CTV) as required by INS-P-05. The as found values were within +/- 15% of the CTV. HNF-5183, article 555.5 requires that air samplers be calibrated to +/- 15% of the CTV. Therefore, if the air sampler as found value is between +/- 10 to 15% of the CTV, no requirements have been exceeded.

As the air sampler as found values were between +/- 10 to 15% of the CTV, no further actions are necessary.

Recommended Corrective actions

It is recommended that this PER be assigned to Base Ops RadCon as Trend Only.

Originator Contact

Please call me if you have furhter questions.

Originators Name	Originators ID	Originators Phone	Date Initiated
Bickel, Eric E	H3764153	(509) 372-1470	10/16/2008

SHIFT OPERATIONS REVIEW

Title

found air sampler (AS) 272AS028 (AS028) to be out of tolerance (OOT) on four ranges during its routine calibration

How Discovered	Agency
self-ID prior to event	

Reportability	SSC Operability	Operability Review	Comp Measures Req
Non-Reportable	N/A	N/A	

Describe actions Taken or Recommended

No immediate BO SO actions identified.

SO Reviewer Name	SO Reviewer ID	SO Reviewer Phone	SO Review Date
Wallgren, Carl B	H0099480	(509) 373-2689	10/16/2008

SCREENING			
PER Significance Level			
Trend Only			
Independent Assessment Review	**Occurrence Report Number**	**Externally Identified**	
No		No	
Assigned Responsible Manager	**Facilities Rep / SSO**	**Safety Management Rep**	
Brannan, Patrick (Brad)			
Program		**Safety Management Program**	
• **N/A**		• **N/A**	
PER Screening Comments			
No comments (Nancy Brown 10/20/08)			
Causal Code			
MGT/Comm/Train	**Human Performance**	**GEMS**	**Equip/Eng/Other**
Failed Barrier	**ORPS Code**	**Functional Area**	**Work Process**
	Not Applicable	Radiation Protection	• Radiological Instrumentation
ISMS	**Consequence Code**		
Perform work within the controls	• Rad Inst - Calibration - Out of tolerances, pass due calibrations, traceability issues, training, problems with procedural processes		
PER Screening Chair	**PER Screening Chair ID**	**PER Screening Chair Phone**	**PER Screening Date**
Brown, Nancy L	H0088797	(509) 373-0992	10/20/2008
PAAA REVIEW			
PAAA Screening	**PAAA Codes**	**Function Codes**	
Not subject to PAAA			
NTS Report Number	**NTS Report Date**		
Repetitive / Recurrent	**Programmatic**	**Intentional Violation / Misrepresentation**	
No	No	No	
PAAA Screening Comments			
Entered review for CE Anderson.			
PAAA Reviewer Name	**PAAA Review Date**		
Quintana, Michael S	10/20/2008		
PAAA Approver Name	**PAAA Approve Date**		
Quintana, Michael S	10/21/2008		
SENIOR MANAGEMENT REVIEW/CONCURRENCE			
TF Operations Morning Leadership Call			
None. 10/21/08			
Instructions for Responsible Manager			
Senior Management	**Sr Mgmt ID**	**Sr Mgmt Phone**	**Sr Mgmt Review Date**
Owen, Annette	H0054042	(509) 372-0533	10/21/2008
ATTACHMENTS			

Link to PER

WRPS-PER-2008-0089 Support Doc.pdf

-- End of Report --
10/21/2008 01:45 PM

Task# WRPS-PER-2008-0089			
E-STARS[R] Report Task Detail Report 10/21/2008 0145			
TASK INFORMATION			
Task#	WRPS-PER-2008-0089		
Subject	Trend; found air sampler (AS) 272AS028 (AS028) to be out of tolerance (OOT) on four ranges during its routine calibration		
Parent Task#		Status	CLOSED 10/21/2008
Reference		Due	10/18/2008
Originator	^PER Coordinator	Priority	Medium
Originator Phone		Category	PER
Origination Date	10/16/2008 1531	Generic1	None
Remote Task#		Generic2	None
Deliverable	PER Review	Generic3	None
Class	None	View Permissions	Global
Instructions	*No Instructions*		
ROUTING LISTS			
1	Review Initial PER		Inactive
	Review New PER		
	• ^SO(Wallgren, Carl B) - Review - Concur - 10/16/2008 2018 *Instructions:*		
	• ^PER Screening(Brown, Nancy L) - Review - Concur - 10/20/2008 1533 *Instructions:*		
	• ^Mgr Review(Owen, Annette) - Review - Concur - 10/21/2008 1101 *Instructions:*		
ATTACHMENTS			
Attachments	1. Link to PER 2. WRPS-PER-2008-0089 Support Doc.pdf		
COLLABORATION			
COMMENTS			
No Comments			

Task# WRPS-PER-2008-0089			
TASK DUE DATE HISTORY			
Modified	10/16/2008 1531 - ^PER Coordinator	New Due Date	10/18/2008 1630
SUB TASK HISTORY			
No Subtasks			
-- end of report --			

WRPS - PER - 2008 - 0089
Support Doc's

Work Order: TFC-WO-08-1278

Title: RADECO AIR SAMPLER CALS (3rd SET)

Date Created: 8/20/2008 08:43:50
Equipment: 272AS028
SC/I:
WorkFlow: PM
Planner: Erbe, Bill
Job Plan: ET-105867
WO Type: 2 - PREVENTIVE
Assigned: Everett, Brian K
Farm/Facility: PortEQ
State: Ready For Work
Phase Desig: BALANCE OF PLANT
PM Id: ET-105867
RAD Risk: Low
Flow Status: OK
Frequency: 182
CACN: 502056
Project Id:
Date Reqd: 9/10/2008 00:00:00
Priority: 4.2 Balance of Plant CM or Upgrades
Route Id: RAD1

Description:
Calibrate Radeco Air Sampler
Comments: Calibration frequency is 6 Months.

COPY

Calibration Meter Readings

PMID/Meter Point	Input Units	Input Value	Output Units	Output Value	Accept Tol%	Low Limit	High Limit	As Found	Found In Tol?	As Left	Left In Tol?
ET-105867CT01	CFM	6.0000	CFM	6.0000	10.00	5.4000	6.6000	NA		NA	
ET-105867CT02	CFM	5.0000	CFM	5.0000	10.00	4.5000	5.5000	4.32	N	4.88	Y
ET-105867CT03	CFM	4.0000	CFM	4.0000	10.00	3.6000	4.4000	3.51	N	4.01	Y
ET-105867CT04	CFM	3.0000	CFM	3.0000	10.00	2.7000	3.3000	2.66	N	3.00	Y
ET-105867CT05	CFM	2.0000	CFM	2.0000	10.00	1.8000	2.2000	1.74	N	2.05	Y
ET-105867CT06	CFM	1.0000	CFM	1.0000	10.00	0.9000	1.1000	.90	Y	1.01	Y

Low
within 15% ?
> 4.25 cfm
> 3.4 cfm
> 2.55 cfm
> 1.7 cfm

272A-
S028

Work Order: TFC-WO-08-1278

Title: RADECO AIR SAMPLER CALS (3rd SET)

Step 1 Of 1 Step Id: 001 State: Ready For Work Safety Class:

Sched Start: Sched Comp: Related Step/Link:

Step Instructions:

Calibrate Air Sampler

Serial # 8956

Identifier # 272AS028

Filter Media Type FLUOROPORE

M&TE Flowmeter

Name BERRA

Standard Number 817-28-03-022

Calibration Date 8-7-08

Due Date 8-7-09

Tolerance

Maximum As-Found air flow value from M&TE 5.755

Record As-Found and As-Left values on PMID meter.

Radcon Engineering notified of any out-of-tolerance value.

Yes X No ____ N/A ____

Comments:

Work Order: TFC-WO-08-1278

Title: RADECO AIR SAMPLER CALS (3rd SET)

Assets Seq	Asset Class	Asset Id	Asset Name	SC/I	Expiration Date
	M&TE	817-28-03-022	SIERRA FLOW METER		8-7-09
	M&TE				
	Meter	272AS028	RADECO Air Sampler		

Trades Crew	Trade Id:	Trade Description:	Workers	Act Hrs.	Delay Code
	T070	Instrument & Control Techs	~~1~~ 2 DL 9-9-08	2	

Attachments: There are 2 document(s) attached to this work order

Description	Path/Name
Header Attachment	
RWP TF-001	__983648.WP TF-001
PROC - 6-RM-719 http://idmsweb/idmsprod/livelink.exe?fi	http://idmsweb/idmsprod/livelink.exe?func=ll&objId=19043602&objAction=Op

Electronic Approvals:

Date	State	Response	Profile	Name	Role
8/20/2008 08:43:59	In Planning	Approved	ret_&_bo_pm_planner	Deffenbaugh, Mike	
8/20/2008 09:13:12	Ready For Work	Approved	ret_&_bo_pm_planner	Deffenbaugh, Mike	

FWC

H. SCHMIDT

FWS Completed By: [signature] **FWC Date:** 9-9-08 **Update Job Plan (Y/N):**

Completed Satisfactorily(yes,no): YES **Asset Condition:**

Comments:

Save

Problem Evaluation Request (PER)

WRPS-PER-2008-0090
Closed 10/21/2008 13:45

PER No	Date of Discovery	Time of Discovery (24:00)	Project
WRPS-PER-2008-0090	10/16/2008	15:40	Radcon-BO

Location

272AW

How Was Problem Discovered

Routine Work

Description of Concern or Problem

Work Order TFC-WO-08-1273 found air sampler (AS) 272AS005 (AS005) to be out of tolerance (OOT) on two ranges during its routine calibration performed on 9/9/2008. AS005 was found to read 4.48 cfm with an acceptable range of 3.6 to 4.4 cfm, and 2.22 with an acceptable range of 1.8 to 2.2. Therefore, AS005 may have collected other than the anticipated amount of air/radioactive particulates and could have mis-estimated the actual airborne radioactive concentration present at the sample location.

Requirement Not Satisfied	Source Document Number

Equipment Identification Number	System Identification
272AS005	

Immediate actions Taken or Planned

AS005 was recalibrated and returned to service.
Base Ops RadCon management was notified.
An evaluation of the impact of the use of AS005 in an OOT condition was completed.
PER was initiated to document the OOT condition of AS005.

Evaluation Performed:
AS005 was last calibrated six months ago as indicated on the supplied calibration documentation to +/- 10% of the conventionally true value (CTV) as required by INS-P-05. The as found values were within +/- 15% of the CTV. HNF-5183, article 555.5 requires that air samplers be calibrated to +/- 15% of the CTV. Therefore, if the air sampler as found value is between +/- 10 to 15% of the CTV, no requirements have been exceeded.

As the air sampler as found values were between +/- 10 to 15% of the CTV, no further actions are necessary.

Recommended Corrective actions

It is recommended that this PER be assigned to Base Ops RadCon as Trend Only.

Originator Contact

Please call me if you have further questions.

Originators Name	Originators ID	Originators Phone	Date Initiated
Bickel, Eric E	H3764153	(509) 372-1470	10/16/2008

SHIFT OPERATIONS REVIEW

Title

found air sampler (AS) 272AS005 (AS005) to be out of tolerance (OOT) on two ranges during its routine calibration

How Discovered	Agency
self-ID prior to event	

Reportability	SSC Operability	Operability Review	Comp Measures Req
Non-Reportable	N/A	N/A	

Describe actions Taken or Recommended

No immediate BO SO actions identified.

SO Reviewer Name	SO Reviewer ID	SO Reviewer Phone	SO Review Date
Wallgren, Carl B	H0099480	(509) 373-2689	10/16/2008

SCREENING

PER Significance Level			
Trend Only			
Independent Assessment Review	**Occurrence Report Number**	**Externally Identified**	
No		No	
Assigned Responsible Manager	**Facilities Rep / SSO**	**Safety Management Rep**	
Brannan, Patrick (Brad)			
Program		**Safety Management Program**	
• **N/A**		• **N/A**	
PER Screening Comments			
No comments (Nancy Brown 10/20/08)			
Causal Code			
MGT/Comm/Train	**Human Performance**	**GEMS**	**Equip/Eng/Other**
Failed Barrier	**ORPS Code**	**Functional Area**	**Work Process**
	Not Applicable	Radiation Protection	• Radiological Instrumentation
ISMS	**Consequence Code**		
Perform work within the controls	• Rad Inst - Calibration - Out of tolerances, pass due calibrations, traceability issues, training, problems with procedural processes		
PER Screening Chair	**PER Screening Chair ID**	**PER Screening Chair Phone**	**PER Screening Date**
Brown, Nancy L	H0088797	(509) 373-0992	10/20/2008
PAAA REVIEW			
PAAA Screening	**PAAA Codes**	**Function Codes**	
Not subject to PAAA			
NTS Report Number	**NTS Report Date**		
Repetitive / Recurrent	**Programmatic**	**Intentional Violation / Misrepresentation**	
No	No	No	
PAAA Screening Comments			
Entered review for CE Anderson.			
PAAA Reviewer Name	**PAAA Review Date**		
Quintana, Michael S	10/20/2008		
PAAA Approver Name	**PAAA Approve Date**		
Quintana, Michael S	10/21/2008		
SENIOR MANAGEMENT REVIEW/CONCURRENCE			
TF Operations Morning Leadership Call			
None. 10/21/08			
Instructions for Responsible Manager			
Senior Management	**Sr Mgmt ID**	**Sr Mgmt Phone**	**Sr Mgmt Review Date**
Owen, Annette	H0054042	(509) 372-0533	10/21/2008
ATTACHMENTS			
Link to PER			

WRPS-PER-2008-0090 Support Doc.pdf

-- End of Report --
10/21/2008 01:45 PM

Task# WRPS-PER-2008-0090

E-STARS[R] Report
Task Detail Report
10/21/2008 0145

TASK INFORMATION

Task#	WRPS-PER-2008-0090		
Subject	Trend; found air sampler (AS) 272AS005 (AS005) to be out of tolerance (OOT) on two ranges during its routine calibration		
Parent Task#		Status	CLOSED 10/21/2008
Reference		Due	10/18/2008
Originator	^PER Coordinator	Priority	Medium
Originator Phone		Category	PER
Origination Date	10/16/2008 1543	Generic1	None
Remote Task#		Generic2	None
Deliverable	PER Review	Generic3	None
Class	None	View Permissions	Global
Instructions	*No Instructions*		

ROUTING LISTS

1	Review Initial PER	Inactive
	Review New PER	
	• ^SO(Wallgren, Carl B) - Review - Concur - 10/16/2008 2019 *Instructions:*	
	• ^PER Screening(Brown, Nancy L) - Review - Concur - 10/20/2008 1534 *Instructions:*	
	• ^Mgr Review(Owen, Annette) - Review - Concur - 10/21/2008 1101 *Instructions:*	

ATTACHMENTS

Attachments	1. Link to PER 2. WRPS-PER-2008-0090 Support Doc.pdf

COLLABORATION

COMMENTS

No Comments

Task# WRPS-PER-2008-0090			
TASK DUE DATE HISTORY			
Modified	10/16/2008 1543 - ^PER Coordinator	New Due Date	10/18/2008 1630
SUB TASK HISTORY			
No Subtasks			
-- end of report --			

NRPS PER-2008-0090
Support Doc's

Work Order: TFC-WO-08-1273

Title: RADECO AIR SAMPLER CALS (3rd SET)

Date Created: 8/20/2008 08:42:57
WorkFlow: PM
WO Type: 2 - PREVENTIVE
State: Ready For Work
RAD Risk: Low
CACN: 502086
Priority: 4.2 Balance of Plant CM or Upgrades

Equipment: 272AS005
Planner: Erbe, Bill
Assigned: Everett, Brian K
Phase Desig: BALANCE OF PLANT
Flow Status: OK
Project Id:

SC/I:
Job Plan: ET-105872
Farm/Facility: PortEQ
PM Id: ET-105872
Frequency: 182
Date Reqd: 9/9/2008 00:00:00
Route Id: RAD1

Description:
Calibrate Radeco Air Sampler
Comments: Calibration frequency is 6 Months.

Calibration Meter Readings

PMID/Meter Point	Input Units	Input Value	Output Units	Output Value	Accept Tol%	Low Limit	High Limit	As Found	Found In Tol?	As Left	Left In Tol?
ET-105872CT01	CFM	4.0000	CFM	4.0000	10.00	3.6000	4.4000	4.48	N	4.01	Y
ET-105872CT02	CFM	3.0000	CFM	3.0000	10.00	2.7000	3.3000	3.25	Y	2.88	Y
ET-105872CT03	CFM	2.0000	CFM	2.0000	10.00	1.8000	2.2000	2.22	N	1.87	Y
ET-105872CT04	CFM	1.0000	CFM	1.0000	10.00	0.9000	1.1000	1.08	Y	0.93	Y

High within 15%
<4.6 cfm &
<2.3 cfm

COPY

272A-S005

Work Order: TFC-WO-08-1273

Title: RADECO AIR SAMPLER CALS (3rd SET)

Step 1 Of 1 Step Id: 001 State: Ready For Work Safety Class:

Sched Start: Sched Comp: Related Step/Link:

Step Instructions:

Calibrate Air Sampler

Serial # UNREADABLE

Identifier # 272AS005

Filter Media Type FLUOROPORE

M&TE Flowmeter

Name SIERRA

Standard Number 817-28-03-022

Calibration Date 8-7-08

Due Date 8-7-09

Tolerance ±1% FS

Maximum As-Found air flow value from M&TE 5.35

Record As-Found and As-Left values on PMID meter.

Radcon Engineering notified of any out-of-tolerance value.

Yes X No ____ N/A ____

Comments:

Work Order: TFC-WO-08-1273

Title: RADECO AIR SAMPLER CALS (3rd SET)

Assets Seq	Asset Class	Asset Id	Asset Name	SC/I	Expiration Date
	M&TE	817-28-03-022	SIERRA FLOW METER		8-7-09
	M&TE				
	Meter	272AS005	RADECO Air Sampler		

Trades	Crew	Trade Id:	Trade Description:	Workers	Act Hrs.	Delay Code
		T070	Instrument & Control Techs	1 2 DL 9-11-08	2	

Attachments: There are 2 document(s) attached to this work order

Description	Path/Name
Header Attachment	
RWP TF-001	__983638.WP TF-001
PROC - 6-RM-719 http://idmsweb/idmsprod/livelink.exe?fi	http://idmsweb/idmsprod/livelink.exe?func=ll&objId=19043602&objAction=Op

Electronic Approvals:

Date	State	Response	Profile	Name	Role
8/20/2008 08:43:07	In Planning	Approved	ret_&_bo_pm_planner	Deffenbaugh, Mike	
8/20/2008 09:05:45	Ready For Work	Approved	ret_&_bo_pm_planner	Deffenbaugh, Mike	

FWC

H. SCHMIDT

FWS Completed By: [signature] FWC Date: 9-11-08 Update Job Plan (Y/N):

Completed Satisfactorily(yes,no): YES Asset Condition:

Comments:

Save

Problem Evaluation Request (PER)

WRPS-PER-2008-0091
Closed 10/21/2008 13:45

PER No	Date of Discovery	Time of Discovery (24:00)	Project
WRPS-PER-2008-0091	10/16/2008	15:50	Radcon-BO

Location

272AW

How Was Problem Discovered

Routine Work

Description of Concern or Problem

Work Order TFC-WO-08-1276 found air sampler (AS) 272AS020 (AS020) to be out of tolerance (OOT) on one range during its routine calibration performed on 9/9/2008. AS020 was found to read 4.37 cfm acceptable range of 4.5 to 5.5 cfm. Therefore, AS020 may have collected other than the anticipated amount of air/radioactive particulates and could have mis-estimated the actual airborne radioactive concentration present at the sample location.

Requirement Not Satisfied	Source Document Number

Equipment Identification Number	System Identification
272AS020	

Immediate actions Taken or Planned

AS020 was recalibrated and returned to service.
Base Ops RadCon management was notified.
An evaluation of the impact of the use of AS020 in an OOT condition was completed.
PER was initiated to document the OOT condition of AS020.

Evaluation Performed:
AS020 was last calibrated six months ago as indicated on the supplied calibration documentation to +/- 10% of the conventionally true value (CTV) as required by INS-P-05. The as found values were within +/- 15% of the CTV. HNF-5183, article 555.5 requires that air samplers be calibrated to +/- 15% of the CTV. Therefore, if the air sampler as found value is between +/- 10 to 15% of the CTV, no requirements have been exceeded.

As the air sampler as found values were between +/- 10 to 15% of the CTV, no further actions are necessary.

Recommended Corrective actions

It is recommended that this PER be assigned to Base Ops RadCon as Trend Only.

Originator Contact

Please call me if you have additional questions.

Originators Name	Originators ID	Originators Phone	Date Initiated
Bickel, Eric E	H3764153	(509) 372-1470	10/16/2008

SHIFT OPERATIONS REVIEW

Title

found air sampler (AS) 272AS020 (AS020) to be out of tolerance (OOT) on one range during its routine calibration

How Discovered	Agency
self-ID prior to event	

Reportability	SSC Operability	Operability Review	Comp Measures Req
Non-Reportable	N/A	N/A	

Describe actions Taken or Recommended

No immediate BO SO actions identified.

SO Reviewer Name	SO Reviewer ID	SO Reviewer Phone	SO Review Date
Wallgren, Carl B	H0099480	(509) 373-2689	10/16/2008

SCREENING

PER Significance Level			
Trend Only			
Independent Assessment Review	**Occurrence Report Number**	**Externally Identified**	
No		No	
Assigned Responsible Manager	**Facilities Rep / SSO**	**Safety Management Rep**	
Brannan, Patrick (Brad)			
Program		**Safety Management Program**	
• **N/A**		• **N/A**	
PER Screening Comments			
No comments (Nancy Brown 10/20/08)			
Causal Code			
MGT/Comm/Train	**Human Performance**	**GEMS**	**Equip/Eng/Other**
Failed Barrier	**ORPS Code**	**Functional Area**	**Work Process**
	Not Applicable	Radiation Protection	• Radiological Instrumentation
ISMS	**Consequence Code**		
Perform work within the controls	• Rad Inst - Calibration - Out of tolerances, pass due calibrations, traceability issues, training, problems with procedural processes		
PER Screening Chair	**PER Screening Chair ID**	**PER Screening Chair Phone**	**PER Screening Date**
Brown, Nancy L	H0088797	(509) 373-0992	10/20/2008
PAAA REVIEW			
PAAA Screening	**PAAA Codes**	**Function Codes**	
Not subject to PAAA			
NTS Report Number	**NTS Report Date**		
Repetitive / Recurrent	**Programmatic**	**Intentional Violation / Misrepresentation**	
No	No	No	
PAAA Screening Comments			
Entered review for CE Anderson.			
PAAA Reviewer Name	**PAAA Review Date**		
Quintana, Michael S	10/20/2008		
PAAA Approver Name	**PAAA Approve Date**		
Quintana, Michael S	10/21/2008		
SENIOR MANAGEMENT REVIEW/CONCURRENCE			
TF Operations Morning Leadership Call			
None. 10/21/08			
Instructions for Responsible Manager			
Senior Management	**Sr Mgmt ID**	**Sr Mgmt Phone**	**Sr Mgmt Review Date**
Owen, Annette	H0054042	(509) 372-0533	10/21/2008
ATTACHMENTS			

Link to PER
WRPS PER 2008-0091 Support Doc.pdf

-- End of Report --
10/21/2008 01:45 PM

Task# WRPS-PER-2008-0091

E-STARS[R] Report
Task Detail Report
10/21/2008 0145

TASK INFORMATION

Task#	WRPS-PER-2008-0091		
Subject	Trend; found air sampler (AS) 272AS020 (AS020) to be out of tolerance (OOT) on one range during its routine calibration		
Parent Task#		Status	CLOSED 10/21/2008
Reference		Due	10/18/2008
Originator	^PER Coordinator	Priority	Medium
Originator Phone		Category	PER
Origination Date	10/16/2008 1553	Generic1	None
Remote Task#		Generic2	None
Deliverable	PER Review	Generic3	None
Class	None	View Permissions	Global
Instructions	*No Instructions*		

ROUTING LISTS

1	Review Initial PER	Inactive
	Review New PER	
	• ^SO(Wallgren, Carl B) - Review - Concur - 10/16/2008 2021 *Instructions:*	
	• ^PER Screening(Brown, Nancy L) - Review - Concur - 10/20/2008 1534 *Instructions:*	
	• ^Mgr Review(Owen, Annette) - Review - Concur - 10/21/2008 1101 *Instructions:*	

ATTACHMENTS

Attachments	1. Link to PER 2. WRPS PER 2008-0091 Support Doc.pdf

COLLABORATION

COMMENTS

No Comments

Task# WRPS-PER-2008-0091			
TASK DUE DATE HISTORY			
Modified	10/16/2008 1553 - ^PER Coordinator	New Due Date	10/18/2008 1630
SUB TASK HISTORY			
No Subtasks			
-- end of report --			

WRPS PER 2008-0091
Support Doc

Work Order: TFC-WO-08-1276

Title: RADECO AIR SAMPLER CALS (3rd SET)

Date Created: 8/20/2008 08:43:29
Equipment: 272AS020
SC/I:
WorkFlow: PM
Planner: Erbe, Bill
Job Plan: ET-105862
WO Type: 2 - PREVENTIVE
Assigned:
Farm/Facility: PortEQ
State: Ready For Work
Phase Desig: BALANCE OF PLANT
PM Id: ET-105862
RAD Risk: Low
Flow Status: OK
Frequency: 182
CACN: 502086
Project Id:
Date Reqd: 9/9/2008 00:00:00
Priority: 4.2 Balance of Plant CM or Upgrades
Route Id: RAD1

Description:

Calibrate Radeco Air Sampler
Comments: Calibration frequency is 6 Months.

Calibration Meter Readings

PMID/Meter Point	Input Units	Input Value	Output Units	Output Value	Accept Tol%	Low Limit	High Limit	As Found	Found In Tol?	As Left	Left In Tol?
ET-105862CT01	CFM	6.0000	CFM	6.0000	10.00	5.4000	6.6000	NA		NA	
ET-105862CT02	CFM	5.0000	CFM	5.0000	10.00	4.5000	5.5000	4.37	N	5.00	Y
ET-105862CT03	CFM	4.0000	CFM	4.0000	10.00	3.6000	4.4000	3.61	Y	4.12	Y
ET-105862CT04	CFM	3.0000	CFM	3.0000	10.00	2.7000	3.3000	2.77	Y	3.17	Y
ET-105862CT05	CFM	2.0000	CFM	2.0000	10.00	1.8000	2.2000	1.96	Y	2.12	Y
ET-105862CT06	CFM	1.0000	CFM	1.0000	10.00	0.9000	1.1000	0.98	Y	1.05	Y

with in 15% (i.e. >4.25cfm)

272A-
S020

Work Order: TFC-WO-08-1276

Title: RADECO AIR SAMPLER CALS (3rd SET)

Step 1 Of 1 Step Id: 001 State: Ready For Work Safety Class:

Sched Start: Sched Comp: Related Step/Link:

Step Instructions:

Calibrate Air Sampler

Serial # 8927

Identifier # 272A5020

Filter Media Type FLUORPORE

M&TE Flowmeter

Name SIERRA

Standard Number 817-28-03-022

Calibration Date 8-7-08

Due Date 8-7-09

Tolerance

Maximum As-Found air flow value from M&TE 5.55

Record As-Found and As-Left values on PMID meter.

Radcon Engineering notified of any out-of-tolerance value.

Yes ✓ No ____ N/A ____

Comments:

Work Order: TFC-WO-08-1276

Title: RADECO AIR SAMPLER CALS (3rd SET)

Assets Seq	Asset Class	Asset Id	Asset Name	SC/I	Expiration Date
	M&TE	817-28-03-022	SIERRA FLOW METER		8-7-09
	M&TE	NA	NA		NA
	Meter	272AS020	RADECO Air Sampler		

Trades Crew	Trade Id:	Trade Description:	Workers	Act Hrs.	Delay Code
	T070	Instrument & Control Techs	DL 12 9-9-08	2	

Attachments: There are 2 document(s) attached to this work order

Description	Path/Name
Header Attachment	
RWP TF-001	__983644.WP TF-001
PROC - 6-RM-719 http://idmsweb/idmsprod/livelink.exe?fi	http://idmsweb/idmsprod/livelink.exe?func=ll&objId=19043602&objAction=Op

Electronic Approvals:

Date	State	Response	Profile	Name	Role
8/20/2008 08:43:38	In Planning	Approved	ret_&_bo_pm_planner	Deffenbaugh, Mike	
8/20/2008 09:10:16	Ready For Work	Approved	ret_&_bo_pm_planner	Deffenbaugh, Mike	

FWC

H. SCHMIDT

FWS Completed By: D. W. B FWC Date: 9-9-08 Update Job Plan (Y/N):

Completed Satisfactorily(yes,no): YES Asset Condition:

Comments:

Save

Problem Evaluation Request (PER)

WRPS-PER-2008-0092
Closed 10/21/2008 13:45

PER No	Date of Discovery	Time of Discovery (24:00)	Project
WRPS-PER-2008-0092	10/16/2008	16:05	Radcon-BO

Location

272AW

How Was Problem Discovered

Routine Work

Description of Concern or Problem

Work Order TFC-WO-08-1268found air sampler (AS) 272AS006 (AS006) to be out of tolerance (OOT) on two ranges during its routine calibration performed on 9/4/2008. AS006 was found to read 3.51 cfm with an acceptable range of 3.6 to 4.4 cfm, and 2.60 cfm with an acceptable range of 2.7 to 3.3. Therefore, AS006 may have collected other than the anticipated amount of air/radioactive particulates and could have mis-estimated the actual airborne radioactive concentration present at the sample location.

Requirement Not Satisfied	Source Document Number

Equipment Identification Number	System Identification
272AWAS006	

Immediate actions Taken or Planned

AS006 was recalibrated and returned to service.
Base Ops RadCon management was notified.
An evaluation of the impact of the use of AS006 in an OOT condition was completed.
PER was initiated to document the OOT condition of AS006.

Evaluation Performed:
AS006 was last calibrated six months ago as indicated on the supplied calibration documentation to +/- 10% of the conventionally true value (CTV) as required by INS-P-05. The as found values were within +/- 15% of the CTV. HNF-5183, article 555.5 requires that air samplers be calibrated to +/- 15% of the CTV. Therefore, if the air sampler as found value is between +/- 10 to 15% of the CTV, no requirements have been exceeded.

As the air sampler as found values were between +/- 10 to 15% of the CTV, no further actions are necessary.

Recommended Corrective actions

It is recommended that this PER be assigned to Base Ops RadCon as Trend Only.

Originator Contact

Please call if you have further questions.

Originators Name	Originators ID	Originators Phone	Date Initiated
Bickel, Eric E	H3764153	(509) 372-1470	10/16/2008

SHIFT OPERATIONS REVIEW

Title

1268found air sampler (AS) 272AS006 (AS006) to be out of tolerance (OOT) on two ranges during its routine calibration

How Discovered	Agency
self-ID prior to event	

Reportability	SSC Operability	Operability Review	Comp Measures Req
Non-Reportable	N/A	N/A	

Describe actions Taken or Recommended

No immediate BO SO actions identified.

SO Reviewer Name	SO Reviewer ID	SO Reviewer Phone	SO Review Date
Wallgren, Carl B	H0099480	(509) 373-2689	10/16/2008

SCREENING

PER Significance Level			
Trend Only			
Independent Assessment Review	**Occurrence Report Number**	**Externally Identified**	
No		No	
Assigned Responsible Manager	**Facilities Rep / SSO**	**Safety Management Rep**	
Brannan, Patrick (Brad)			
Program		**Safety Management Program**	
• **N/A**		• **N/A**	
PER Screening Comments			
No comments (Nancy Brown 10/20/08)			
Causal Code			
MGT/Comm/Train	**Human Performance**	**GEMS**	**Equip/Eng/Other**
Failed Barrier	**ORPS Code**	**Functional Area**	**Work Process**
	Not Applicable	Radiation Protection	• Radiological Instrumentation
ISMS	**Consequence Code**		
Perform work within the controls	• Rad Inst - Calibration - Out of tolerances, pass due calibrations, traceability issues, training, problems with procedural processes		
PER Screening Chair	**PER Screening Chair ID**	**PER Screening Chair Phone**	**PER Screening Date**
Brown, Nancy L	H0088797	(509) 373-0992	10/20/2008
PAAA REVIEW			
PAAA Screening	**PAAA Codes**	**Function Codes**	
Not subject to PAAA			
NTS Report Number	**NTS Report Date**		
Repetitive / Recurrent	**Programmatic**	**Intentional Violation / Misrepresentation**	
No	No	No	
PAAA Screening Comments			
Entered review for CE Anderson.			
PAAA Reviewer Name	**PAAA Review Date**		
Quintana, Michael S	10/20/2008		
PAAA Approver Name	**PAAA Approve Date**		
Quintana, Michael S	10/21/2008		
SENIOR MANAGEMENT REVIEW/CONCURRENCE			
TF Operations Morning Leadership Call			
None. 10/21/08			
Instructions for Responsible Manager			
Senior Management	**Sr Mgmt ID**	**Sr Mgmt Phone**	**Sr Mgmt Review Date**
Owen, Annette	H0054042	(509) 372-0533	10/21/2008
ATTACHMENTS			
Link to PER			

WRPS PER 2008-0092 Support Doc.pdf

-- End of Report --
10/21/2008 01:45 PM

Task# WRPS-PER-2008-0092			
E-STARS[R] Report Task Detail Report 10/21/2008 0145			
TASK INFORMATION			
Task#	WRPS-PER-2008-0092		
Subject	Trend; 268found air sampler (AS) 272AS006 (AS006) to be out of tolerance (OOT) on two ranges during its routine calibration		
Parent Task#		Status	CLOSED 10/21/2008
Reference		Due	10/18/2008
Originator	^PER Coordinator	Priority	Medium
Originator Phone		Category	PER
Origination Date	10/16/2008 1606	Generic1	None
Remote Task#		Generic2	None
Deliverable	PER Review	Generic3	None
Class	None	View Permissions	Global
Instructions	*No Instructions*		
ROUTING LISTS			
1	Review Initial PER		Inactive
	Review New PER		
	• ^SO(Wallgren, Carl B) - Review - Concur - 10/16/2008 2022 *Instructions:*		
	• ^PER Screening(Brown, Nancy L) - Review - Concur - 10/20/2008 1535 *Instructions:*		
	• ^Mgr Review(Owen, Annette) - Review - Concur - 10/21/2008 1102 *Instructions:*		
ATTACHMENTS			
Attachments	1. Link to PER 2. WRPS PER 2008-0092 Support Doc.pdf		
COLLABORATION			
COMMENTS			
No Comments			

Task# WRPS-PER-2008-0092			
TASK DUE DATE HISTORY			
Modified	10/16/2008 1606 - ^PER Coordinator	New Due Date	10/18/2008 1630
SUB TASK HISTORY			
No Subtasks			
-- end of report --			

WRPS Pen 2008-0092
Support Doc

Work Order: TFC-WO-08-1268

Title: RADECO AIR SAMPLER CALS (3rd SET)

COPY

Date Created: 8/20/2008 08:42:03
WorkFlow: PM
WO Type: 2 - PREVENTIVE
State: Ready For Work
RAD Risk: Low
CACN: 502086
Priority: 4.2 Balance of Plant CM or Upgrades

Equipment: 272AS006
Planner: Erbe, Bill
Assigned: Everett, Brian K
Phase Desig: BALANCE OF PLANT
Flow Status: OK
Project Id:

SC/I:
Job Plan: ET-105874
Farm/Facility: PortEQ
PM Id: ET-105874
Frequency: 182
Date Reqd: 9/4/2008 00:00:00
Route Id: RAD1

Description:

Calibrate Radeco Air Sampler
Comments: Calibration frequency is 6 Months.

Calibration Meter Readings

PMID/Meter Point	Input Units	Input Value	Output Units	Output Value	Accept Tol%	Low Limit	High Limit	As Found	Found In Tol?	As Left	Left In Tol?
ET-105874CT01	CFM	4.0000	CFM	4.0000	10.00	3.6000	4.4000	3.51	N	4.00	Y
ET-105874CT02	CFM	3.0000	CFM	3.0000	10.00	2.7000	3.3000	2.60	N	2.86	Y
ET-105874CT03	CFM	2.0000	CFM	2.0000	10.00	1.8000	2.2000	1.89	Y	2.05	Y
ET-105874CT04	CFM	1.0000	CFM	1.0000	10.00	0.9000	1.1000	0.96	Y	1.03	Y

Low within 15

> 3.4 cfm
> 2.55 cfm

Work Order: TFC-WO-08-1268

Title: RADECO AIR SAMPLER CALS (3rd SET)

Step 1 **Of** 1 **Step Id:** 001 **State:** Ready For Work **Safety Class:**

Sched Start: **Sched Comp:** **Related Step/Link:**

Step Instructions:

Calibrate Air Sampler

Serial # 8122

Identifier # 272AS 006

Filter Media Type FLUOR PORE

M&TE Flowmeter

Name SIERRA

Standard Number 817-28-03-022

Calibration Date 8-7-08

Due Date 8-7-09

Tolerance

Maximum As-Found air flow value from M&TE 4.66

Record As-Found and As-Left values on PMID meter.

Radcon Engineering notified of any out-of-tolerance value.

Yes X No ____ N/A ____

Comments:

REPLACED FEET ON AIR SAMPLER. DL HS 9-10-08

Work Order: TFC-WO-08-1268

Title: RADECO AIR SAMPLER CALS (3rd SET)

Assets Seq	Asset Class	Asset Id	Asset Name	SC/I	Expiration Date
	M&TE	817-28-03-022	SIERRA FLOW METER		8-7-09
	M&TE	NA	NA		NA
	Meter	272AS006	RADECO Air Sampler		

Trades Crew	Trade Id:	Trade Description:	Workers	Act Hrs.	Delay Code
	T070	Instrument & Control Techs	2	2	

Attachments: There are 2 document(s) attached to this work order

Description	Path/Name
Header Attachment	
RWP TF-001	__983628.WP TF-001
PROC - 6-RM-719 http://idmsweb/idmsprod/livelink.exe?fi	http://idmsweb/idmsprod/livelink.exe?func=ll&objId=19043602&objAction=Op

Electronic Approvals:

Date	State	Response	Profile	Name	Role
8/20/2008 08:42:14	In Planning	Approved	ret_&_bo_pm_planner	Deffenbaugh, Mike	
8/20/2008 08:49:11	Ready For Work	Approved	ret_&_bo_pm_planner	Deffenbaugh, Mike	

FWC H. SCHMIDT

FWS Completed By: D.W.L FWC Date: 9-10-08 Update Job Plan (Y/N):

Completed Satisfactorily(yes,no): YES Asset Condition:

Comments:

Save

Problem Evaluation Request (PER)

WRPS-PER-2008-0105
Closed 10/23/2008 13:15

PER No	Date of Discovery	Time of Discovery (24:00)	Project
WRPS-PER-2008-0105	10/20/2008	10:00	Maintenance

Location

Portable Equipment

How Was Problem Discovered

Maintenance Activity

Description of Concern or Problem

On 10/20/08, Base Operations RadCon received a calibration as-found out of tolerance (OOT) report from Base Operations Maintenance: A Radeco air sampler (serial number 9003), was outside the acceptable calibration tolerance of +10% of the Conventionally True Value (CVT).

The rotameter was found OOT per Base Operations Maintenance procedure.

Listed below is a summary of the "as-found conditions:
RADECO 9003 RAD-1038 ASRD8-0028

OBSERVED CTV DELTA TOLERANCE
5 4.1 -0.9 -18.00%
4 3.6 -0.4 -10.00%
3 2.6 -0.4 -13.33%
2 1.6 -0.4 -20.00%

This sampler was also outside the tolerance requirement of TANK FARMS RADIOLOGICAL CONTROL MANUAL (TFRCM) HNF-5183, Rev. 1 Chapter 5, Article 555.5, which references the flow tolerance guidance provided in ANSI N42.17B.

This ANSI N42.17B standard specifies that air flow meters, differential pressure indicators, and other devices used to determine volumetric flow rates of air samplers and monitors should be calibrated to within ±15% of the true reading.

Users of this air sampler could have over estimated the true volume of air collected. Calculations could have been under estimated by up to 20%.

Requirement Not Satisfied	Source Document Number

Equipment Identification Number	System Identification
rad-1038 (#9003)	Radiation Monitoring

Immediate actions Taken or Planned

An evaluation of the OOT condition, in accordance with TFC-ESHQ-RP_INS-P-05, REV B-2, to determine the significance of the OOT condition was performed.

2704HV count room data was collected and the results from the single instance when this sampler was used were reviewed.

All beta results were < the Minimum Detection capabilities of the counting instrument.

The alpha results was found to be < 20% of DAC value when original results were worst case corrected, i.e. applying a 1.2 factor to original results.

In this worst case scenario, the sample result would have been 8% of alpha DAC.

The sample was collected from within a posted ARA, workers were within the protection factors for the respiratory protection used, and no further actions would have resulted from the use of the OOT sampler.

Recommended Corrective actions

No further actions are recommended. Trend only.

Originator Contact

No

Originators Name	Originators ID	Originators Phone	Date Initiated
Wendling, Marc	H0074276	(509) 373-2121	10/21/2008

SHIFT OPERATIONS REVIEW

Title			
Radeco air sampler (serial number 9003), was outside the acceptable calibration			
How Discovered		**Agency**	
self-ID prior to event			
Reportability	**SSC Operability**	**Operability Review**	**Comp Measures Req**
Non-Reportable	N/A	N/A	
Describe actions Taken or Recommended			
No immediate BO SO actions identified.			
SO Reviewer Name	**SO Reviewer ID**	**SO Reviewer Phone**	**SO Review Date**
Wallgren, Carl B	H0099480	(509) 373-2689	10/21/2008
SCREENING			
PER Significance Level			
Trend Only			
Independent Assessment Review	**Occurrence Report Number**	**Externally Identified**	
No		No	
Assigned Responsible Manager	**Facilities Rep / SSO**	**Safety Management Rep**	
Brannan, Patrick (Brad)			
Program		**Safety Management Program**	
• **N/A**		• **N/A**	
PER Screening Comments			
No comments (Nancy Brown 10/22/08)			
Causal Code			
MGT/Comm/Train	**Human Performance**	**GEMS**	**Equip/Eng/Other**
Failed Barrier	**ORPS Code**	**Functional Area**	**Work Process**
	Not Applicable	Radiation Protection	• Radiological Instrumentation
ISMS	**Consequence Code**		
Perform work within the controls	• Rad Inst - Calibration - Out of tolerances, pass due calibrations, traceability issues, training, problems with procedural processes		
PER Screening Chair	**PER Screening Chair ID**	**PER Screening Chair Phone**	**PER Screening Date**
Brown, Nancy L	H0088797	(509) 373-0992	10/22/2008
PAAA REVIEW			
PAAA Screening	**PAAA Codes**	**Function Codes**	
Not subject to PAAA			
NTS Report Number	**NTS Report Date**		
Repetitive / Recurrent	**Programmatic**	**Intentional Violation / Misrepresentation**	
No	No	No	
PAAA Screening Comments			
Entered review for CE Anderson.			

PAAA Reviewer Name	PAAA Review Date		
Quintana, Michael S	10/23/2008		
PAAA Approver Name	**PAAA Approve Date**		
Quintana, Michael S	10/23/2008		
SENIOR MANAGEMENT REVIEW/CONCURRENCE			
TF Operations Morning Leadership Call			
None. 10/23/08			
Instructions for Responsible Manager			
Senior Management	**Sr Mgmt ID**	**Sr Mgmt Phone**	**Sr Mgmt Review Date**
Owen, Annette	H0054042	(509) 372-0533	10/23/2008
ATTACHMENTS			
Link to PER			
AUDIT HISTORY			
Change Date	**Auditor**	**Comments**	
10/22/2008 15:43	Brown, Nancy L	'PER Screening Comments' was changed.	

-- End of Report --
10/23/2008 01:15 PM

Task# WRPS-PER-2008-0105			
E-STARS[R] Report Task Detail Report 10/23/2008 0115			
TASK INFORMATION			
Task#	WRPS-PER-2008-0105		
Subject	Trend; Radeco air sampler (serial number 9003), was outside the acceptable calibration		
Parent Task#		Status	CLOSED 10/23/2008
Reference		Due	10/23/2008
Originator	^PER Coordinator	Priority	Medium
Originator Phone		Category	PER
Origination Date	10/21/2008 1351	Generic1	None
Remote Task#		Generic2	None
Deliverable	PER Review	Generic3	None
Class	None	View Permissions	Global
Instructions	*No Instructions*		
ROUTING LISTS			
1	Review Initial PER		Inactive
	Review New PER		
	• ^SO(Wallgren, Carl B) - Review - Concur - 10/21/2008 1646 *Instructions:*		
	• ^PER Screening(Brown, Nancy L) - Review - Concur - 10/22/2008 1536 *Instructions:*		
	• ^Mgr Review(Owen, Annette) - Review - Concur - 10/23/2008 0856 *Instructions:*		
ATTACHMENTS			
Attachments	1. Link to PER		
COLLABORATION			
COMMENTS			
No Comments			
TASK DUE DATE HISTORY			
Modified	10/21/2008 1352 - ^PER Coordinator	New Due Date	10/23/2008 1630

Task# WRPS-PER-2008-0105
SUB TASK HISTORY
No Subtasks
-- end of report --

Save

Problem Evaluation Request (PER)

WRPS-PER-2008-0108
Closed 10/27/2008 10:15

PER No	Date of Discovery	Time of Discovery (24:00)	Project
WRPS-PER-2008-0108	10/22/2008	08:00	RadCon-RC

Location

2704HV

How Was Problem Discovered

Maintenance Activity

Description of Concern or Problem

SST R&C Radiological Control received a calibration as-found out-of-tolerance report from the Pacific Northwest National Laboratory calibration laboratory indicating that Eberline BNW-1 rate meter, barcode number CMEB3-0206 (serial number EP1692), was found to be outside the acceptable tolerance of plus or minus 20 percent.

Requirement Not Satisfied	Source Document Number

Equipment Identification Number	System Identification
Barcode CMEB3-0206 (SN# EP1692)	Radiation Monitoring

Immediate actions Taken or Planned

Initiated PER in accordance with TFC-ESHQ-RP_INS-P-05.
Notified SST R&C Radiological Control Management.
Performed review of subject out-of-tolerance report.

Recommended Corrective actions

Upon review of the subject out-of-tolerance report, Closure Radiological Control determined that the rate meter was within the plus or minus 20 percent acceptable tolerance for the X-1 and X-10 scales and that only the X-100 scale was out-of-tolerance. The out-of-tolerance condition at 20 percent and 80 percent of the X-1 scale was conservative (i.e., the instrument would have read higher than actual conditions). This conservative nature ensures that the instrument would not have underestimated actual conditions when used on the X-100 scale in the field while out-of-tolerance.

Based on the conservative nature of the out-of-tolerance condition, no additional actions are necessary to address this out-of-tolerance report.

Recommend PER screening as a Trend Only.

Originator Contact

No

Originators Name	Originators ID	Originators Phone	Date Initiated
Duffy, Bill L	H7812206	(509) 373-3133	10/22/2008

SHIFT OPERATIONS REVIEW

Title

Radiological Control received a calibration as-found out-of-tolerance report from PNNL

How Discovered	Agency
self-ID prior to event	

Reportability	SSC Operability	Operability Review	Comp Measures Req
Non-Reportable	N/A	N/A	

Describe actions Taken or Recommended

No immediate BO SO actions required.

SO Reviewer Name	SO Reviewer ID	SO Reviewer Phone	SO Review Date
Wallgren, Carl B	H0099480	(509) 373-2689	10/22/2008

SCREENING

PER Significance Level			
Trend Only			
Independent Assessment Review	**Occurrence Report Number**	**Externally Identified**	
No		No	
Assigned Responsible Manager	**Facilities Rep / SSO**	**Safety Management Rep**	
Adams, Ed J			
Program		**Safety Management Program**	
• **N/A**		• **N/A**	
PER Screening Comments			
No comments (Nancy Brown 10/23/08)			
Causal Code			
MGT/Comm/Train	**Human Performance**	**GEMS**	**Equip/Eng/Other**
Failed Barrier	**ORPS Code**	**Functional Area**	**Work Process**
	Not Applicable	Radiation Protection	• Radiological Instrumentation
ISMS	**Consequence Code**		
Perform work within the controls	• Rad Inst - Calibration - Out of tolerances, pass due calibrations, traceability issues, training, problems with procedural processes		
PER Screening Chair	**PER Screening Chair ID**	**PER Screening Chair Phone**	**PER Screening Date**
Brown, Nancy L	H0088797	(509) 373-0992	10/23/2008
PAAA REVIEW			
PAAA Screening	**PAAA Codes**	**Function Codes**	
Not subject to PAAA			
NTS Report Number	**NTS Report Date**		
Repetitive / Recurrent	**Programmatic**	**Intentional Violation / Misrepresentation**	
No	No	No	
PAAA Screening Comments			
Entered review for CE Anderson.			
PAAA Reviewer Name	**PAAA Review Date**		
Quintana, Michael S	10/23/2008		
PAAA Approver Name	**PAAA Approve Date**		
Quintana, Michael S	10/24/2008		
SENIOR MANAGEMENT REVIEW/CONCURRENCE			
TF Operations Morning Leadership Call			
None. 10/24/08			
Instructions for Responsible Manager			
Senior Management	**Sr Mgmt ID**	**Sr Mgmt Phone**	**Sr Mgmt Review Date**
Owen, Annette	H0054042	(509) 372-0533	10/24/2008
ATTACHMENTS			
Link to PER			

-- End of Report --
10/27/2008 10:15 AM

Task# WRPS-PER-2008-0108			
E-STARS[R] Report Task Detail Report 10/27/2008 1015			
TASK INFORMATION			
Task#	WRPS-PER-2008-0108		
Subject	Trend; Radiological Control received a calibration as-found out-of-tolerance report from PNNL		
Parent Task#		Status	CLOSED 10/27/2008
Reference		Due	10/24/2008
Originator	^PER Coordinator	Priority	Medium
Originator Phone		Category	PER
Origination Date	10/22/2008 1226	Generic1	None
Remote Task#		Generic2	None
Deliverable	PER Review	Generic3	None
Class	None	View Permissions	Global
Instructions	*No Instructions*		
ROUTING LISTS			
1	Review Initial PER		Inactive
	Review New PER		
	• ^SO(Wallgren, Carl B) - Review - Concur - 10/22/2008 1546 *Instructions:*		
	• ^PER Screening(Brown, Nancy L) - Review - Concur - 10/23/2008 1439 *Instructions:*		
	• ^Mgr Review(Owen, Annette) - Review - Concur - 10/24/2008 0914 *Instructions:*		
ATTACHMENTS			
Attachments	1. Link to PER		
COLLABORATION			
COMMENTS			
No Comments			
TASK DUE DATE HISTORY			

Task# WRPS-PER-2008-0108			
Modified	10/22/2008 1226 - ^PER Coordinator	New Due Date	10/24/2008 1630
SUB TASK HISTORY			
No Subtasks			
-- end of report --			

Save

Problem Evaluation Request (PER)

WRPS-PER-2008-0118
Closed 02/09/2009 09:00

PER No	Date of Discovery	Time of Discovery (24:00)	Project
WRPS-PER-2008-0118	10/23/2008	07:15	IS/IH-BO

Location

OTHER

How Was Problem Discovered

General Observation

Description of Concern or Problem

IH Sampling was performed in AP farm on 10/21. Eight AirCheck XR5000 sample pumps were prepared for sampling using thermosorb tubes. The pre and post rate check, to determine the volumetric flow rate of air through the sampling train, was performed using a 000116 - DC-Lite BIOS. The average pre/post flow difference from all eight pumps was greater than 10%.

Requirement Not Satisfied	Source Document Number

Equipment Identification Number	System Identification

Immediate actions Taken or Planned

Project IH contacted the Central IH Lead.

Recommended Corrective actions

Further investigate to determine the cause of the pre/post flow difference.

Originator Contact

I would like to help in investigating the cause

Originators Name	Originators ID	Originators Phone	Date Initiated
Roueche, Kim A	H0078536	(509) 372-3310	10/23/2008

SHIFT OPERATIONS REVIEW

Title

IH sampling in AP farm had pre/post flow difference of greater than 10%

How Discovered	Agency
self-ID prior to event	

Reportability	SSC Operability	Operability Review	Comp Measures Req
Non-Reportable	N/A	N/A	

Describe actions Taken or Recommended

No additional actions taken or recommended by BO SO.

SO Reviewer Name	SO Reviewer ID	SO Reviewer Phone	SO Review Date
Andrews, Jeffrey E	H0078933	(509) 373-2689	10/23/2008

SCREENING

PER Significance Level	
PIE/CIM	

Independent Assessment Review	Occurrence Report Number	Externally Identified	
No		No	

Assigned Responsible Manager	Facilities Rep / SSO	Safety Management Rep	
Jones, Mark W			

Program	Safety Management Program
• N/A	• Industrial Hygiene

PER Screening Comments

FURTHER EVALUATION: Investigate to determine the cause of the pre/post flow difference and make recommendations . (Nancy Brown 10/24/08)

RESCREEN REQUEST (F/E) Bowman, Tami A acting as Jones, Mark W 10/30/2008:

To investigate the possible causes for the pre & post flow differences for the 8 AirChek XR 5000 pumps used on 10/21/08, two lines of inquiry will be followed:

1. Equipment evaluation - The 8 pumps affected will be sent to IHES to simulate run conditions several times as specified in the survey. Also, the associated calibration equipment used to perform the pre & post flow checks will be sent to IHES for evaluation.

2. IHT discussion & demonstration - The IHT's performing the pre & post calibration will first be asked if they experienced any problems in conducting this procedure or were there any unusual circumstances that could have affected it and then asked to demonstrate the calibration method for the media used for the survey.

Recommend screening as PIE/CIM assigned to Mark Jones.

The corrective actions on evaluation of equipment and demonstrations with IHTs was reviewed by telephone (11/03/08) with Kim Roueche'; she concurs with the proposed corrective actions.

Phillips/Bowman 10/30/08

RE-SCREEN COMMENTS: Change to PIE/CIM
(Nancy Brown 11/04/08)

Causal Code			
MGT/Comm/Train	**Human Performance**	**GEMS**	**Equip/Eng/Other**
Failed Barrier	**ORPS Code**	**Functional Area**	**Work Process**
	Not Applicable	Operations	• IH Monitoring
ISMS	**Consequence Code**		
Identify and analyze hazards	• **N/A** - No consequence code applies		
PER Screening Chair	**PER Screening Chair ID**	**PER Screening Chair Phone**	**PER Screening Date**
Brown, Nancy L	H0088797	(509) 373-0992	10/24/2008
PAAA REVIEW			
PAAA Screening	**PAAA Codes**	**Function Codes**	
Not subject to PAAA			
NTS Report Number	**NTS Report Date**		
Repetitive / Recurrent	**Programmatic**	**Intentional Violation / Misrepresentation**	
No	No	No	
PAAA Screening Comments			
Entered review for CE Anderson.			
PAAA Reviewer Name	**PAAA Review Date**		
Anderson, Craig E	11/04/2008		
PAAA Approver Name	**PAAA Approve Date**		
Anderson, Craig E	11/04/2008		
SENIOR MANAGEMENT REVIEW/CONCURRENCE			
TF Operations Morning Leadership Call			
Responsible manager change from Rocky Brooks to Mark Jones at the request of Kim Roueche. 10/27/08 None. 11/5/08			
Instructions for Responsible Manager			

Evaluate suggestion, enter comments and required actions on PIE/CIM tab of the PER. Disposition in accordance with TFC-ESHQ-Q_C-C-01, Problem Evaluation Request.

Senior Management	Sr Mgmt ID	Sr Mgmt Phone	Sr Mgmt Review Date
Owen, Annette	H0054042	(509) 372-0533	11/05/2008

CAUSE ANALYSIS

Description of Occurrence

Extent of Condition

Safety Significance

Generic Implications

Remedial Corrective Action

Causal Analysis, Apparent Cause and/or Root Cause Analysis

CORRECTIVE ACTIONS

Actionee	Action Due Date	E-STARS Number
Jones, Mark W	02/09/2009	WRPS-PER-2008-0118.1

Action

Conduct training classes on calibration and operation of the AirChek 2000 and the XR5000 pumps for Industrial Hygiene Technicians.

Deliverable: Training rosters; 90% trained

Corrective Action Attachments

- Link to PER
- WRPS-PER-2008-0118 Closure Documents.pdf

PIE/CIM

Evaluation of PIE/CIM Initiative

I. Action Taken

A. Met with the affected IH & IHT's on 11/5/08 to determine which pumps were involved (SKC model XR5000), how they were used during the surveys, what flow rates they were set at initially as well as their ending flows, etc.

Working with an IHT on the manufacturer's calibration procedure for the SKC XR5000, a potential source of error observed concerned how the flow rate is set vs. the method used previously for its predecessor – the SKC model AirChek 2000 pump.

B. Affected IHT's were asked to demonstrate their pre & post calibration procedure with the SKC XR5000. Both demonstrated the correct method.

C. IHES was requested on 11/12/08 to evaluate the affected pumps.

Results indicate that the pumps tested were pre & post calibrating according to the manufacturer's specifications under varying flow rates and run time conditions.

D. The SKC technical representative was contacted to determine if there were any reported defects with the XR5000 that could have caused the out of tolerance post flows.
None were reported.

II. Conclusion – Interviews with the affected IHT's, observation of their calibration procedure, a review of the survey information and tests conducted by IHES indicates the probable cause to be the similarity of the pumps having dissimilar ways of setting the flow rate. Specifically, the AirChek 2000 pumps' operating manual instructs the user to lock in the adjusted flow rate when the "End" command is reached. This is changed in the new model SKC XR5000 pump where the adjusted flow rate is locked in at the flashing "ADJ" and "FLOW" display. There is no "End" command in the XR5000 menu. A comparison of the post flow rates of the pumps that were out of tolerance when compared with the post flow rates when they were last used seemed to confirm this. Since the AirChek 2000 models have been around since about December 2002 and the XR5000 since about April 2008, IHT's may be more used to the calibration procedure with the AirChek 2000 vs. the XR5000 pumps.

ATTACHMENTS		
Link to PER		
AUDIT HISTORY		
Change Date	**Auditor**	**Comments**
10/27/2008 10:01	Owen, Annette	'Assigned Responsible Manager' was changed.
10/27/2008 10:02	Owen, Annette	Responsible Manager Task Launched by Owen, Annette
10/30/2008 15:49	Owen, Annette	'PER Screening Comments' was changed.
11/03/2008 16:14	Owen, Annette	'PER Screening Comments' was changed.
11/04/2008 10:53	Brown, Nancy L	'PER Screening Comments' was changed.
11/04/2008 15:24	Anderson, Craig E	PAAA Screening Changed
11/04/2008 15:29	Brown, Nancy L	'PER Significance Level' was changed from Further Evaluation to PIE/CIM. 'PER Screening Comments' was changed.
11/05/2008 08:04	Owen, Annette	'TF Operations Morning Leadership Call' was changed. 'Instructions for Responsible Manager' was changed.
01/05/2009 08:58	Glaman, Linda R	'Screening Program' was changed. 'Screening Safety Managemnt Program' was added.
01/05/2009 09:00	Glaman, Linda R	Corrective actions Launched by Glaman, Linda R

-- End of Report --
02/09/2009 09:15 AM

Task# WRPS-PER-2008-0118			
E-STARS[R] Report Task Detail Report 02/09/2009 0915			
TASK INFORMATION			
Task#	WRPS-PER-2008-0118		
Subject	PIE; IH sampling in AP farm had pre/post flow difference of greater than 10%		
Parent Task#		Status	CLOSED 02/09/2009
Reference		Due	02/23/2009
Originator	^PER Coordinator	Priority	Medium
Originator Phone		Category	PER
Origination Date	10/23/2008 1706	Generic1	None
Remote Task#		Generic2	None
Deliverable	PER Review	Generic3	None
Class	None	View Permissions	Global
Instructions	*No Instructions*		
ROUTING LISTS			
1	Corrective actions Routing Lis		Inactive
	To launch Corrective actions.		
	• ^PER CAs(Owen, Annette) - Assign - Completed - 02/09/2009 0845 *Instructions:*		
2	Responsible Manager		Inactive
	Evaluate suggestion, enter comments and required actions on PIE/CIM tab of the PER. Disposition in accordance with TFC-ESHQ-Q_C-C-01, Problem Evaluation Request.		
	• Jones, Mark W - Assign - Completed with comments - 10/30/2008 1251 *Instructions:*		
	• Jones, Mark W - Assign - Completed with comments - 10/30/2008 1252 *Instructions:* Did you contact the originator about the PER? Document your contact in the response window.		
	• Jones, Mark W - Assign - Completed with comments - 11/03/2008 1235 *Instructions:* Was the PER originator contacted? Please document this--that is the purpose of the second assign role in the routing list.		
	• Jones, Mark W - Assign - Completed with comments - 11/03/2008 1500 *Instructions:* Document PER originator contact.		
	• ^PER Screening(Brown, Nancy L) - Assign - Completed - 11/04/2008 1529		

Task# WRPS-PER-2008-0118		
	Instructions:	
	• ^Mgr Review(Owen, Annette) - Review - Concur - 11/05/2008 0804 *Instructions:*	
	• Jones, Mark W - Assign - Completed with comments - 12/31/2008 1450 *Instructions:*	
3	Review Initial PER	Inactive
	Review New PER	
	• ^SO(Andrews, Jeffrey E) - Review - Concur - 10/23/2008 1830 *Instructions:*	
	• ^PER Screening(Brown, Nancy L) - Review - Concur - 10/24/2008 1405 *Instructions:*	
	• ^Mgr Review(Owen, Annette) - Review - Concur - 10/27/2008 1002 *Instructions:*	
ATTACHMENTS		
Attachments	1. Link to PER	
COLLABORATION		
COMMENTS		
Poster	Jones, Mark W (Bowman, Tami A) - 10/30/2008 1210	
	Completed	
	To investigate the possible causes for the pre & post flow differences for the 8 AirChek XR 5000 pumps used on 10/21/08, two lines of inquiry will be followed: 1. Equipment evaluation - The 8 pumps affected will be sent to IHES to simulate run conditions several times as specified in the survey. Also, the associated calibration equipment used to perform the pre & post flow checks will be sent to IHES for evaluation. 2. IHT discussion & demonstration - The IHT's performing the pre & post calibration will first be asked if they experienced any problems in conducting this procedure or were there any unusual circumstances that could have affected it and then asked to demonstrate the calibration method for the media used for the survey. Recommend screening to PIE/CIM assigned to Mark W. Jones Phillips/Bowman 10/30/08	
Poster	Jones, Mark W (Bowman, Tami A) - 10/30/2008 1210	
	Completed	

Task# WRPS-PER-2008-0118			
	To investigate the possible causes for the pre & post flow differences for the 8 AirChek XR 5000 pumps used on 10/21/08, two lines of inquiry will be followed: 1. Equipment evaluation - The 8 pumps affected will be sent to IHES to simulate run conditions several times as specified in the survey. Also, the associated calibration equipment used to perform the pre & post flow checks will be sent to IHES for evaluation. 2. IHT discussion & demonstration - The IHT's performing the pre & post calibration will first be asked if they experienced any problems in conducting this procedure or were there any unusual circumstances that could have affected it and then asked to demonstrate the calibration method for the media used for the survey. Recommend screening as PIE/CIM assigned to Mark Jones. Phillips/Bowman 10/30/08		
Poster	Jones, Mark W (Bowman, Tami A) - 11/03/2008 1211		
	Completed		
	To evaluate the possible causes for the pre & post flow differences for the 8 AirChekXR 500 pumps used on 10/21/08 an equipment evaluation will be conducted and a discussion and demonstration will be held with the IHTs. Recommend re-screen to PIE/CIM for corrective actions. Bowman 11/3/08		
Poster	Jones, Mark W (Bowman, Tami A) - 11/03/2008 0311		
	Completed		
	The corrective actions on evaluation of equipment and demonstrations with IHTs was reviewed by telephone (11/03/08) with K.Roueche'; she concurs with the proposed corrective actions. Bowman 11/03/08		
Poster	Jones, Mark W (Bowman, Tami A) - 12/31/2008 0212		
	Completed		
	PIE/CIM evaluation complete; corrective action ready to launch. Bowman 12/31/08		
Poster	^PER Coordinator (Owen, Annette) - 02/09/2009 0802		
	CLOSED		
	All Corrective Actions closed.		
TASK DUE DATE HISTORY			
Modified	01/05/2009 0900 - ^PER Coordinator	New Due Date	02/23/2009 0000
Modified	01/05/2009 0900 - ^PER Coordinator	New Due Date	02/19/2009 0000

Task# WRPS-PER-2008-0118			
Modified	11/05/2008 0831 - ^PER Coordinator (Owen, Annette)	New Due Date	01/04/2009 1630
Modified	10/27/2008 1002 - ^PER Coordinator	New Due Date	11/03/2008 1630
Modified	10/27/2008 1002 - ^PER Coordinator	New Due Date	11/03/2008 1630
Modified	10/23/2008 1706 - ^PER Coordinator	New Due Date	10/25/2008 1630
SUB TASK HISTORY			
Subtask#	WRPS-PER-2008-0118.1		
Subject	WRPS-PER-2008-0118; PIE; Conduct training classes on calibration and operation of the AirChek 2000 and the XR5000 pumps for Industrial Hygiene Technic		
Originator	^PER CAs		
	Routing List	*No Active Routing List*	
-- end of report --			

Task# WRPS-PER-2008-0118.1			
E-STARS[R] Report Task Detail Report 02/09/2009 0916			
TASK INFORMATION			
Task#	WRPS-PER-2008-0118.1		
Subject	WRPS-PER-2008-0118; PIE; Conduct training classes on calibration and operation of the AirChek 2000 and the XR5000 pumps for Industrial Hygiene Technic		
Parent Task#	WRPS-PER-2008-0118	Status	CLOSED 02/09/2009
Reference	WRPS-PER-2008-0118	Due	02/15/2009
Originator	^PER CAs	Priority	Medium
Originator Phone		Category	PER
Origination Date	01/05/2009 0900	Generic1	None
Remote Task#		Generic2	None
Deliverable	PER Review	Generic3	None
Class	None	View Permissions	Global
Instructions	*No Instructions*		
ROUTING LISTS			
1	Corrective Action		Inactive
	Conduct training classes on calibration and operation of the AirChek 2000 and the XR5000 pumps for Industrial Hygiene Technicians. Deliverable: Training rosters; 90% trained RESPONSIBLE MANAGER: When this corrective action is complete, enter a closure statement in E-STARS and close the E-STARS subtask. Refer to the Problem Evaluation Request procedure TFC-ESHQ-Q-C-C-01, Section 4.4 for closure documentation requirements		
	• Jones, Mark W - Assign - Completed with comments - 02/05/2009 1347 *Instructions:*		
ATTACHMENTS			
Attachments	1. Link to PER 2. WRPS-PER-2008-0118 Closure Documents.pdf		
COLLABORATION			
COMMENTS			
Poster	Jones, Mark W (Bowman, Tami A) - 02/05/2009 0102		

Task# WRPS-PER-2008-0118.1			
	Completed		
	All closure documentation to fulfill deliverable have been attached in Estars; includes 100% completion. Bowman 02/05/09		
Poster	^PER CAs (Owen, Annette) - 02/09/2009 0802		
	CLOSED		
	Closure statement and attached documentation are adequate to close this action.		
TASK DUE DATE HISTORY			
Modified	01/05/2009 0900 - ^PER CAs	New Due Date	02/15/2009 0000
Modified	01/05/2009 0900 - ^PER CAs	New Due Date	02/19/2009 0000
SUB TASK HISTORY			
No Subtasks			
-- end of report --			

12/08

IHT Instrument Refresher Class

AirChek 2000 & XR5000 Quiz!!!

Please match the statements below with the right pump model or both.

a - AirChek 2000
b - XR5000
c - Both

1. Operating temperature is 32 – 113 F. ___

2. With a fully charged battery, run time is ~ 40 hrs. ___

3. Flow rate accuracy is ± 5 % of the set flow rate. ___

4. Overall flow rate range is 5 – 5000 ml/min. ___

5. High flow rate range is 1000 – 3250 ml/min. ___

6. Low flow rate range is 5 – 500 ml/min. ___

7. Charger plug orientation is "Δ" – arrow side up to prevent short-circuiting the battery pack – yikes! ___

8. Flow fault restart sequence is every 15 sec. pump will attempt to restart for up to 5 times. ___

9. Intrinsically safe for Class 1 – Group A, B, C, D, Class II - Group E, F, G, Class III, Temperature code T3C. ___

AirChek 2000

Review

1. Hardware
2. Menus – pgs. 8 & 9
3. "Setting Pump Flow Rate" – p. 10
4. "Setting Sampling Time" – p. 11
5. "Setting a Delayed Start" – p. 12

To: Mark Jones – IH Program Manager 12/30/08
Washington River Protection Solutions

From: Jose Phillips MSPH, CIH
Dade Moeller & Assoc.

Ref. – PER # 2008 – 0118

I. Action Taken

A. Met with the affected IH & IHT's on 11/5/08 to determine which pumps were involved (SKC model XR5000), how they were used during the surveys, what flow rates they were set at initially as well as their ending flows, etc.

Working with an IHT on the manufacturer's calibration procedure for the SKC XR5000, a potential source of error observed concerned how the flow rate is set vs. the method used previously for its predecessor – the SKC model AirChek 2000 pump.

B. Affected IHT's were asked to demonstrate their pre & post calibration procedure with the SKC XR5000. Both demonstrated the correct method.

C. IHES was requested on 11/12/08 to evaluate the affected pumps.

Results indicate that the pumps tested were pre & post calibrating according to the manufacturer's specifications under varying flow rates and run time conditions.

D. The SKC technical representative was contacted to determine if there were any reported defects with the XR5000 that could have caused the out of tolerance post flows. None were reported.

II. Conclusion – Interviews with the affected IHT's, observation of their calibration procedure, a review of the survey information and tests conducted by IHES indicates the probable cause to be the similarity of the pumps having dissimilar ways of setting the flow rate. Specifically, the AirChek 2000 pumps' operating manual instructs the user to lock in the adjusted flow rate when the "End" command is reached. This is changed in the new model SKC XR5000 pump where the adjusted flow rate is locked in at the flashing "ADJ" and "FLOW" display. There is no "End" command in the XR5000 menu. A comparison of the post flow rates of the pumps that were out of tolerance when compared with the post flow rates when they were last used seemed to confirm this. Since the AirChek 2000 models have been around since about December 2002 and the XR5000 since about April 2008, IHT's may be more used to the calibration procedure with the AirChek 2000 vs. the XR5000 pumps.

III. Recommendation – Conduct training classes on calibration and operation of the AirChek 2000 and the XR5000 pumps.

Course Completion Roster

PRINT DATE -November 24, 2008

Course No.	Course Title	Date/Time Complete		
357105	CYCLE1 IHT INSTRUMENT CONT TRG - CLASSES ON LUMEX, WIPE SAMPLING	Thursday	12/04/2008	15:30
Session No. 0017	Location 2704HV / G228 SKC XR5000 } AIRCHECK	Beginning Date/Time Thursday 2000 PUMP	12/04/2008	12:00

RECORDS USE ONLY

NOTE: IN ORDER TO OBTAIN CREDIT FOR A CLASS, FILL OUT THE FORM ACCURATELY:

1. Print Name in format LAST, FIRST, MI (unless name is already provided)
2. Sign name in PERMANENT INK and provide requested information.
3. If you do not have a HID or Payroll number, contact your instructor to complete a Training Completion Record, form A-6001-539.

Billing Information:
- ☐ Billable Class
- ☐ Non-Billable Class

	Hanford ID (HID) or Person ID	Print Name (LAST, First, MI)	Signature	Company	CACN (Charge Code)	Billing Code
~~1~~	~~0013569~~	~~Cleveland,Evan D~~		WRPS		
2	0037246	Garner,Brett A	Brett Garner	WRPS		
3	1662900	Perkes,Randall S	Randall S Perkes	WRPS		

Instructor Name (Printed/Signature): JOSE PHILLIPS / Jose Phillips

Authorized Name (Printed/Signature):

Date/MSIN:

COMMENTS:

*BILLING CODES: (CB) Complete Bill, (FB) Fail Bill, (IB) Incomplete Bill, (NB) No Show Bill, (XB) Cancel Bill, (CN) Complete No-Bill, (IN) Incomplete No-Bill, (XN) Cancel No-Bill, if blank default to (CB) Complete Bill.

"OFFICIAL USE ONLY"

DISTRIBUTION: ORIGINAL TO TRAINING RECORDS G6-60.

Course Completion Roster

PRINT DATE -December 04, 2008

Course No.	Course Title	Date/Time Complete	RECORDS USE ONLY
357105	CYCLE1 IHT INSTRUMENT CONT TRG	Tuesday 12/09/2008 12:00	
Session No. 0018	Location 2704HV / G229	Beginning Date/Time Tuesday 12/09/2008 08:30	

NOTE: IN ORDER TO OBTAIN CREDIT FOR A CLASS, FILL OUT THE FORM ACCURATELY:

1. Print Name in format LAST, FIRST, MI (unless name is already provided)
2. Sign name in PERMANENT INK and provide requested information.
3. If you do not have a HID or Payroll number, contact your instructor to complete a Training Completion Record, form A-6001-539.

Billing Information:
☐ Billable Class
☐ Non-Billable Class

	Hanford ID (HID) or Person ID	Print Name (LAST, First, MI)	Signature	Company	CACN (Charge Code)	Billing Code
1	0565990	Gustafson,Kevin A		WRPS		
2	0072958	Harding,Ronald A		WRPS		
3	0102594	Hollis,Christopher N		WRPS		
4	1662900	Perkes,Randall S		WRPS		

Instructor Name (Printed/Signature)	Authenticator Name (Printed/Signature)	Date/MSIN
JOSE BONILLAS /		

COMMENTS:

*BILLING CODES: (CB) Complete Bill, (FB) Fail Bill, (IB) Incomplete Bill, (NB) No Show Bill, (XB) Cancel Bill, (CN) Complete No-Bill, (IN) Incomplete No-Bill, (XX) Cancel No-Bill, If blank default to (CB) Complete Bill.

"OFFICIAL USE ONLY"

DISTRIBUTION: ORIGINAL TO TRAINING RECORDS 06.60

Course Completion Roster

PRINT DATE -December 11, 2008

Course No.	Course Title	Date/Time Complete	RECORDS USE ONLY
357105	CYCLE1 IHT INSTRUMENT CONT TRG	Tuesday 12/16/2008 12:00	
Session No. 0019	Location 2704HV / G229	Beginning Date/Time Tuesday 12/16/2008 08:30	

NOTE: IN ORDER TO OBTAIN CREDIT FOR A CLASS, FILL OUT THE FORM ACCURATELY:

1. Print Name in format LAST, FIRST, MI (unless name is already provided)
2. Sign name in PERMANENT INK and provide requested information.
3. If you do not have a HID or Payroll number, contact your instructor to complete a Training Completion Record, form A-6001-539.

Billing Information:
☐ Billable Class
☐ Non-Billable Class

	Hanford ID (HID) or Person ID	Print Name (LAST, First, MI)	Signature	Company	CACN (Charge Code)	Billing Code
1	0066956	Brunson,Jeffrey R	J R Brunson	WRPS		
~~2~~	~~0082163~~	~~Graham,Roy D~~		WRPS		
3	0058389	Junt,Kasey Q		WRPS		
4	0103233	Sant,Steven J		WRPS		

Instructor Name (Printed/Signature)	Authenticator Name (Printed/Signature)	Date/MSIN

COMMENTS:

*BILLING CODES: (CB) Complete Bill, (FB) Fail Bill, (IB) Incomplete Bill, (NB) No Show Bill, (XB) Cancel Bill, (CN) Complete No-Bill, (IN) Incomplete No-Bill, (XX) Cancel No-Bill, If blank default to (CB) Complete Bill.

"OFFICIAL USE ONLY"

DISTRIBUTION: ORIGINAL TO TRAINING RECORDS G6-60.

Course Completion Roster

PRINT DATE -December 11, 2008

Course No.	Course Title	Date/Time Complete	RECORDS USE ONLY
357105	CYCLE1 IHT INSTRUMENT CONT TRG	Thursday 12/18/2008 15:30	
Session No. 0020	Location 2704HV / G228	Beginning Date/Time Thursday 12/18/2008 12:00	

NOTE: IN ORDER TO OBTAIN CREDIT FOR A CLASS, FILL OUT THE FORM ACCURATELY:

1. Print Name in format LAST, FIRST, MI (unless name is already provided)
2. Sign name in PERMANENT INK and provide requested information.
3. If you do not have a HID or Payroll number, contact your instructor to complete a Training Completion Record, form A-6001-539.

Billing Information:
☐ Billable Class
☐ Non-Billable Class

	Hanford ID (HID) or Person ID	Print Name (LAST, First, MI)	Signature	Company	CACN (Charge Code)	Billing Code
1	~~0093631~~ H0015569	~~Eilersen,Ronald V~~ Evan D. Cleveland	Evan D. Cleveland	WRPS		
2	~~0061370~~ H0082163	~~Payne,Joseph A~~ Roy GRAHAM	Roy	WRPS		
3	0033762	Spaulding,Dell F	Dell F Spaulding	WRPS		
	006803	Wilhelm, Alan J.	Alan J. Wilhelm	WRPS		

Instructor Name (Printed/Signature)	Authenticator Name (Printed/Signature)	Date/MSIN
JESSE PHILLIPS / Jesse Phillips		

COMMENTS:

*BILLING CODES: (CB) Complete Bill, (FB) Fail Bill, (IB) Incomplete Bill, (NB) No Show Bill, (XB) Cancel Bill, (CN) Complete No-Bill, (IN) Incomplete No-Bill, (XX) Cancel No-Bill, If blank default to (CB) Complete Bill.

"OFFICIAL USE ONLY"

DISTRIBUTION: ORIGINAL TO TRAINING RECORDS G6-60

Course Completion Roster

PRINT DATE -December 18, 2008

Course No.	Course Title	Date/Time Complete	RECORDS USE ONLY
357105	CYCLE1 IHT INSTRUMENT CONT TRG	Tuesday 12/23/2008 12:00	
Session No. 0021	Location 2704HV / G229	Beginning Date/Time Tuesday 12/23/2008 08:30	

NOTE: IN ORDER TO OBTAIN CREDIT FOR A CLASS, FILL OUT THE FORM ACCURATELY:

1. Print Name in format LAST, FIRST, MI (unless name is already provided)
2. Sign name in PERMANENT INK and provide requested information.
3. If you do not have a HID or Payroll number, contact your instructor to complete a Training Completion Record, form A-6001-539.

Billing Information:
☐ Billable Class
☐ Non-Billable Class

	Hanford ID (HID) or Person ID	Print Name (LAST, First, MI)	Signature	Company	CACN (Charge Code)	Billing Code
1	~~0013569~~	~~Cleveland,Evan D~~		~~WRPS~~		
~~2~~	~~0009092~~	~~Spicer,Ronald A~~		~~WRPS~~		
3	2191620	Sullivan,William J		WRPS		
4	0049318	Woods,Tom T		WRPS		
	0025373	IRVIN RONALD		WRPS		
	8193548	Tole James		WRPS		

Instructor Name (Printed/Signature) JOSS PHILLIPS

Authenticator Name (Printed/Signature)

Date/MSIN

COMMENTS:

*BILLING CODES: (CB) Complete Bill, (FB) Fail Bill, (IB) Incomplete Bill, (NB) No Show Bill, (XB) Cancel Bill, (CN) Complete No-Bill, (IN) Incomplete No-Bill, (XX) Cancel No-Bill, If blank default to (CB) Complete Bill.

"OFFICIAL USE ONLY"

Course Completion Roster

PRINT DATE -December 31, 2008

Course No.	Course Title	Date/Time Complete	RECORDS USE ONLY
357105	CYCLE1 IHT INSTRUMENT CONT TRG	Tuesday 01/06/2009 12:00	
Session No. 0022	Location 2704HV / B226	Beginning Date/Time Tuesday 01/06/2009 08:30	

NOTE: IN ORDER TO OBTAIN CREDIT FOR A CLASS, FILL OUT THE FORM ACCURATELY:

1. Print Name in format LAST, FIRST, MI (unless name is already provided)
2. Sign name in PERMANENT INK and provide requested information.
3. If you do not have a HID or Payroll number, contact your instructor to complete a Training Completion Record, form A-6001-539.

Billing Information:
☐ Billable Class
☐ Non-Billable Class

	Hanford ID (HID) or Person ID	Print Name (LAST, First, MI)	Signature	Company	CACN (Charge Code)	Billing Code
1	6941236	Bughi,Kevan D		WRPS		
2	0032313	Higbee,Kirk R		WRPS		
3	0077549	Kenworthy,Tracy A		WRPS		
4	0061370	Payne, Joseph A.		WRPS		

Instructor Name (Printed/Signature)	Authenticator Name (Printed/Signature)	Date/MSIN
JOSE PHILLIPS /		

COMMENTS:

*BILLING CODES: (CB) Complete Bill, (FB) Fail Bill, (IB) Incomplete Bill, (NB) No Show Bill, (XB) Cancel Bill, (CN) Complete No-Bill, (IN) Incomplete No-Bill, (XX) Cancel No-Bill, If blank default to (CB) Complete Bill.

"OFFICIAL USE ONLY"

DISTRIBUTION: ORIGINAL TO TRAINING RECORDS G6-60.

Course Completion Roster

PRINT DATE -December 31, 2008

Course No.	Course Title	Date/Time Complete	RECORDS USE ONLY
357105	CYCLE1 IHT INSTRUMENT CONT TRG	Thursday 01/08/2009 15:30	
Session No. 0023	Location 2704HV / G228	Beginning Date/Time Thursday 01/08/2009 12:00	

NOTE: IN ORDER TO OBTAIN CREDIT FOR A CLASS, FILL OUT THE FORM ACCURATELY:

1. Print Name in format LAST, FIRST, MI (unless name is already provided)
2. Sign name in PERMANENT INK and provide requested information.
3. If you do not have a HID or Payroll number, contact your instructor to complete a Training Completion Record, form A-6001-539.

Billing Information:
☐ Billable Class
☐ Non-Billable Class

	Hanford ID (HID) or Person ID	Print Name (LAST, First, MI)	Signature	Company	CACN (Charge Code)	Billing Code
1	0008902	Acob Jr,Jose	Jose Acob	WRPS		
~~2~~	~~0047453~~	~~Horner,Randell L~~		~~WRPS~~		
3	0047357	McKinney,John E	[illegible]	WRPS		
4	0068780	ROHNER, JANET J	Janet J Rohner	WRPS		
5	0080354	O'NEAL M. L.	M. L. O'Neal	WRPS		
6	0009092	SPICER R. A	[illegible]	WRPS		
7	0093637	Eikeeren, Ronald V.	Ronald V. Eikeeren	WRPS		
8	0089476	JONES, KENNETH L.	[illegible]	WRPS		

Instructor Name (Printed/Signature)	Authenticator Name (Printed/Signature)	Date/MSIN
JOSE PHILLIPS / Jose Phillips		

COMMENTS:

*BILLING CODES: (CB) Complete Bill, (FB) Fail Bill, (IB) Incomplete Bill, (NB) No Show Bill, (XB) Cancel Bill, (CN) Complete No-Bill, (IN) Incomplete No-Bill, (XX) Cancel No-Bill, If blank default to (CB) Complete Bill.

"OFFICIAL USE ONLY"

DISTRIBUTION: ORIGINAL TO TRAINING RECORDS G6-60.

Course Completion Roster

PRINT DATE -January 08, 2009

Course No.	Course Title	Date/Time Complete	RECORDS USE ONLY
357105	CYCLE1 IHT INSTRUMENT CONT TRG	Tuesday 01/13/2009 12:00	
Session No. 0024	Location 2704HV / G229	Beginning Date/Time Tuesday 01/13/2009 08:30	

NOTE: IN ORDER TO OBTAIN CREDIT FOR A CLASS, FILL OUT THE FORM ACCURATELY:

1. Print Name in format LAST, FIRST, MI (unless name is already provided)
2. Sign name in PERMANENT INK and provide requested information.
3. If you do not have a HID or Payroll number, contact your instructor to complete a Training Completion Record, form A-6001-539.

Billing Information:
☐ Billable Class
☐ Non-Billable Class

	Hanford ID (HID) or Person ID	Print Name (LAST, First, MI)	Signature	Company	CACN (Charge Code)	Billing Code
1	~~0025373~~	~~Irvin,Ronald L~~		WRPS		
2	0172830	Laws,Alan S		WRPS		
3	0096122	Urie,Michael J	Michael J Urie	WRPS		
4	~~0068093~~	~~Wilhelm,Alan~~ J		WRPS		

Instructor Name (Printed/Signature)	Authenticator Name (Printed/Signature)	Date/MSIN
JOSE PHILLIPS / Jose Phillips		

COMMENTS:

*BILLING CODES: (CB) Complete Bill, (FB) Fail Bill, (IB) Incomplete Bill, (NB) No Show Bill, (XB) Cancel Bill, (CN) Complete No-Bill, (IN) Incomplete No-Bill, (XX) Cancel No-Bill, If blank default to (CB) Complete Bill.

"OFFICIAL USE ONLY"

DISTRIBUTION: ORIGINAL TO TRAINING RECORDS G6-60.

Course Completion Roster

PRINT DATE -January 22, 2009

Course No.	Course Title	Date/Time Complete	RECORDS USE ONLY
357105	CYCLE1 IHT INSTRUMENT CONT TRG	Tuesday 01/27/2009 12:00	
Session No. 0025	Location 2704HV / G229	Beginning Date/Time Tuesday 01/27/2009 08:30	

NOTE: IN ORDER TO OBTAIN CREDIT FOR A CLASS, FILL OUT THE FORM ACCURATELY:

1. Print Name in format LAST, FIRST, MI (unless name is already provided)
2. Sign name in PERMANENT INK and provide requested information.
3. If you do not have a HID or Payroll number, contact your instructor to complete a Training Completion Record, form A-6001-539.

Billing Information:
☐ Billable Class
☐ Non-Billable Class

	Hanford ID (HID) or Person ID	Print Name (LAST, First, MI)	Signature	Company	CACN (Charge Code)	Billing Code
~~1~~	~~0089676~~	~~Jones,Kenneth L~~		~~WRPS~~		
2	0026109	Newcomb,Kevin L	Kevin L Newcomb	WRPS		
~~3~~	~~0080354~~	~~O'Neal,M L~~		~~WRPS~~		
4	0067364	Woodcock,Michael T	Mike Woodcock	WRPS		
	0047453	Horner, Randy L	Randy Horner	WRPS		

Instructor Name (Printed/Signature)	Authenticator Name (Printed/Signature)	Date/MSIN
JESS PHILLIPS / Jess Phillips		

COMMENTS:

*BILLING CODES: (CB) Complete Bill, (FB) Fail Bill, (IB) Incomplete Bill, (NB) No Show Bill, (XB) Cancel Bill, (CN) Complete No-Bill, (IN) Incomplete No-Bill, (XX) Cancel No-Bill, If blank default to (CB) Complete Bill.

"OFFICIAL USE ONLY"

DISTRIBUTION: ORIGINAL TO TRAINING RECORDS G6-60.

Manager
Kim A Rousone

Industrial Hygienist
Wendy L Adams
Darren L Merrill

Safety Spec
Mark D Cranston
Lonnie Flowers
Jason L Randles

Industrial Hygiene Tech-WL
[illegible]

Industrial Hygiene Technician
[illegible]

Industrial Hygiene

Manager
Mark W Jones

Industrial Hygienist
Elizabeth A Hill
Tom T Van Morris
Mike Zadel

Industrial Hygiene Tech-WL
[illegible]

Industrial Hygiene Technician
[illegible]

TBB20000 / 2BB00
Total: 7

7

Safety/IH

Manager
Markis T Hughey

Industrial Hygienist
Matt C Call
Jim Jabara

Safety Spec
Mike J Powers

Industrial Hygiene Tech-WL
Kasey Q Junt

Industrial Hygiene Technician
Jose Acob Acob Jr
Kevan D Bughi
Brett A Garner
Ronald A Harding
Ronald L Irvin
Kenneth L Jones
Tracy A Kenworthy
Joseph A Payne
Dell F Spaulding
James S Tole
Michael J Urie

TFG10000 / 2FG00
Total: 16

16

Industrial Hygiene Technician[redacted] Hygienists

100% trained

Save

Problem Evaluation Request (PER)

WRPS-PER-2008-0137
Closed 04/09/2009 20:45

PER No	Date of Discovery	Time of Discovery (24:00)	Project
WRPS-PER-2008-0137	10/28/2008	15:25	Eng-BO

Location

OTHER

How Was Problem Discovered

DOE-ORP

Description of Concern or Problem

U. S. Department of Energy (DOE), Office of River Protection (ORP) conducted a surveillance of the implementation of Quality Assurance Program (QAP) requirements for testing and storage of HEPA filters. The surveillance identified the following Finding:

S-08-ESQ-TANKFARM-017-F01: Recently installed HEPA filters that are nonconforming to the current procurement specification were not documented as nonconforming and dispositioned for use at the time of installation as required.

Requirement Not Satisfied	Source Document Number

Equipment Identification Number	System Identification

Immediate actions Taken or Planned

Initiated PER

Recommended Corrective actions

Develop and transmit Corrective Action Plan to ORP by 11/28/08.

Originator Contact

e-mail

Originators Name	Originators ID	Originators Phone	Date Initiated
Mata, Beth L	H0056284	(509) 373-0422	10/28/2008

SHIFT OPERATIONS REVIEW

Title

ORP Surveillance of HEPA Filters

How Discovered	Agency
Externally Identified	ORP

Reportability	SSC Operability	Operability Review	Comp Measures Req
Non-Reportable	N/A	N/A	

Describe actions Taken or Recommended

No additional actions taken or recommended by BO SO.

SO Reviewer Name	SO Reviewer ID	SO Reviewer Phone	SO Review Date
Andrews, Jeffrey E	H0078933	(509) 373-2689	10/28/2008

SCREENING

PER Significance Level			
PER with Resolution			

Independent Assessment Review	Occurrence Report Number	Externally Identified	
No		Yes	

Assigned Responsible Manager	Facilities Rep / SSO	Safety Management Rep	
Fish, Michael A			

Program		Safety Management Program	
• ^N/A^		• Quality Assurance	
PER Screening Comments			
PER w/ Res with formal Apparent Cause Analysis (Nancy Brown 10/30/08)			
Causal Code			
A2B5C02	Equipment/Material Problem Procurement Control LTA Fabricated item did not meet requirements		
A4B5C04	Management Problem Change Management LTA Risks/consequences associated with change not adequately reviewed/assessed		
A5B2C08	Communications LTA Written Communications Content LTA Incomplete/situation not covered		
A6B3C02	Training Deficiency Training Material LTA Inadequate content		
MGT/Comm/Train	**Human Performance**	**GEMS**	**Equip/Eng/Other**
Failed Barrier	**ORPS Code**	**Functional Area**	**Work Process**
	Not Applicable	Acquisitions/Procurement	• Engineering Evaluation • Procurement: Service-Approve Cont Req • Procurement: Service-Prep SOW
ISMS	**Consequence Code**		
Perform work within the controls	• HEPA Filter/ DP - HVAC, HEPA Filter, Differential Pressure (DP) not operable, not operated correctly, or otherwise LTA		
PER Screening Chair	**PER Screening Chair ID**	**PER Screening Chair Phone**	**PER Screening Date**
Brown, Nancy L	H0088797	(509) 373-0992	10/30/2008
PAAA REVIEW			
PAAA Screening	**PAAA Codes**	**Function Codes**	
PAAA, Non-NTS Reportable	• 10 CFR 830.122 (g)(1)	• Procurement	
NTS Report Number	**NTS Report Date**		
Repetitive / Recurrent	**Programmatic**	**Intentional Violation / Misrepresentation**	
No	No	No	
PAAA Screening Comments			
PAAA Reviewer Name	**PAAA Review Date**		
Anderson, Craig E	10/29/2008		
PAAA Approver Name	**PAAA Approve Date**		
Anderson, Craig E	10/30/2008		
SENIOR MANAGEMENT REVIEW/CONCURRENCE			
TF Operations Morning Leadership Call			
None. 11/3/08			

Instructions for Responsible Manager

Review the PER Screening Tab and Senior Manager Review for requested data. Complete the task in E-STARS in accordance with TFC-ESHQ-Q_C-C-01, and TFC-ESHQ-Q_ADM-C-12 Apparent Cause Analysis & Corrective Action Planning.

Senior Management	Sr Mgmt ID	Sr Mgmt Phone	Sr Mgmt Review Date
Owen, Annette	H0054042	(509) 372-0533	11/03/2008

CAUSE ANALYSIS

Description of Occurrence

A surveillance report by ORP (S-08-ESQ-TANKFARM-017) concluded that after the TOC issued radial filter specification,RPP-SPEC-28675, Rev 4 dated 8/12/08, any filters installed on site after this date should conform to Rev 4 of the specification (i.e. should be tested at the DOE filter test facility). This is irrespective of the specification revision the filters were originally ordered to. Finding S-08-ESQ-TANKFARM-017-F01 describes this conclusion. Discussions with the ORP surveillance team concluded that filters not conforming to the latest specification (rev 4) should have been documented as nonconforming and an engineering evaluation performed and documented justifying their continued use.

Extent of Condition

The extent of condition for this issue was determined by reviewing procurements of radial filters made prior to the issuance of revision 4 of RPP-SPEC-28675 to determine whether any radial filters had been installed on site or existed in storage and were available for future installation without a non-conformance report having been generated to document their acceptability for use. This review determined that approximately 40 radial filters have been installed on site without nonconformance documentation and approximately 36 radial filters (40 cfm) are still in the stores system that were ordered prior to issuing revision 4 of the Radial Filter specification. Revision 4 requires that radial filters be tested at the DOE filter test facility prior to use on the Hanford site. Non of the 40 installed filters or 36 filters in stores have been tested at the DOE filter test facility.

Safety Significance

These filters are general service.

Generic Implications

Remedial Corrective Action

No remedial corrective actions were generated as a result of this issue.

Causal Analysis, Apparent Cause and/or Root Cause Analysis

An apparent cause analysis using the "Why" technique was performed in accordance with TFC-ESHQ-Q_ADM-C-12.

Why were radial filters that were purchased prior to issuance of Revision 4 of the radial filter specification (RPP-SPEC-28675 dated 8/12/08) allowed to be used without a written justification? Revision 4 of the specification requires all radial filters to be tested at the DOE filter test facility whereas prior revisions did not require radial filters to be tested at the DOE filter test facility (A2B5C02).

The cause of this is that the consequences of the change in the specification were not adequately reviewed by Engineering. Engineering considered the prior ordered filters to be suitable for use because they conformed to their original purchase specification in all respects. There was also no change to the design, usage, or Flanders testing of these units. Engineering, however, failed to issue a documented justification for continued use of the filters (A4B5C04).

Why did Engineering did not appreciate that because the prior ordered filters did not meet the current specification they were not considered as satisfying the required specification requirements?

The cause of this was determined to be that less than adequate instructions are provided in the engineering change notice (ECN) procedure coupled with a lack of training. The ECN procedure includes the requirement to identify documents that are impacted by a change. However, instructions and training have tended to emphasize operating procedure impacts rather than procurement documents. If the ECN procedure and/or form were modified to require the responsible engineer to consider whether prior procurements are impacted by the change and to specifically question whether a non-conformance report is required to disposition changes in requirements then the impact of the specification change would have been addressed (A5B2C08 and A6B3C02). The ECN procedure and/or form should be revised to include procurement documents as a type of impacted document due to the ECN change and additional required reading provided to engineers to emphasize the need to consider the impact of in-process or prior procurements.

CORRECTIVE ACTIONS

Actionee	Action Due Date	E-STARS Number
Cannon, Joel M	12/05/2008	WRPS-PER-2008-0137.1

Action

Issue a Non-Conformance Report (NCR) to justify continued use of radial filters procured prior to revision 4 of RPP-SPEC-28675.

Deliverable: Copy of Issued Non-Conformance Report.

Corrective Action Attachments

- 0802533_08-ESQ-246_WRPS_-_[0810280673].pdf
- CH2M-PER-2008-0137 CLOSURE CH-08-NCR-035.pdf
- Link to PER
- NCR 035.pdf
- WRPS-PER-2008-0137 - Why Analysis.doc
- WRPS-PER-2008-0137 Originator Feedback.pdf

Actionee	Action Due Date	E-STARS Number
Faust, Gary L	02/27/2009	WRPS-PER-2008-0137.2

Action

Issue a revision of the Engineering Change Notice Procedure, TFC-ENG-DESIGN-C-06 and/or the ECN form and instructions to ensure that impacts on in-process or prior procurements are considered when making changes to procurement specifications or other documents and to question whether a Non-Conformance Report needs to be issued associated with the change.

Deliverable: Copy of revised procedure TFC-ENG-DESIGN-C-06 and/or revised ECN Form.

Corrective Action Attachments

- 0802533_08-ESQ-246_WRPS_-_[0810280673].pdf
- CH2M-PER-2008-0137 CLOSURE CH-08-NCR-035.pdf
- Link to PER
- TFC-ENG-DESIGN-C-06, Rev G-5 Signed ADCA.pdf
- WRPS-PER-2008-0137 - Why Analysis.doc
- WRPS-PER-2008-0137 Originator Feedback.pdf
- WRPS-PER-2008-0137.2 TFC-ENG-DESIGN-C-06 Rev 5.pdf

Actionee	Action Due Date	E-STARS Number
Faust, Gary L	03/15/2009	WRPS-PER-2008-0137.3

Action

Issue a required reading to qualified system engineers, engineering managers, and quality assurance engineers regarding changes to TFC-ENG-DESIGN-C-06 addressing impacts to procurements.

Deliverable: Copy of required reading and evidence of 100% completion.

Corrective Action Attachments

- 0802533_08-ESQ-246_WRPS_-_[0810280673].pdf
- CH2M-PER-2008-0137 CLOSURE CH-08-NCR-035.pdf
- Link to PER
- WRPS-PER-2008-0137 - Why Analysis.doc
- WRPS-PER-2008-0137 Originator Feedback.pdf
- WRPS-PER-2008-0137.3 CLOSURE 100% REQ READ COMPLETE.pdf

ATTACHMENTS

0802533_08-ESQ-246_WRPS_-_[0810280673].pdf

CH2M-PER-2008-0137 CLOSURE CH-08-NCR-035.pdf

Link to PER

WRPS-PER-2008-0137 - Why Analysis.doc

WRPS-PER-2008-0137 Originator Feedback.pdf

AUDIT HISTORY

Change Date	Auditor	Comments
10/29/2008 08:47	Anderson, Craig E	PAAA Codes Changed
10/30/2008 10:39	Owen, Annette	'Recommended Corrective actions' was changed.
11/03/2008 08:05	Owen, Annette	Responsible Manager Task Launched by Owen, Annette
12/02/2008 14:05	Fish, Michael A	Change to Cause Analysis screen/Corrective Action plan.
12/02/2008 14:08	Jones, Terry	Change to Cause Analysis screen/Corrective Action plan.
12/03/2008 09:23	Glaman, Linda R	'Screening Program' was changed. 'Screening Safety Managemnt Program' was changed.

12/03/2008 09:23	Glaman, Linda R	Corrective actions Launched by Glaman, Linda R
01/30/2009 09:09	Glaman, Linda R	Change to Cause Analysis screen/Corrective Action plan.
01/30/2009 09:13	Glaman, Linda R	CA .3 1st extension to 3-15-09 per form a-6003-227. LBG 1-30-09 Due to the activities required to develop the new Management Directive TFC-MD-62, "Interim Direction with Revised Requirements for Procurement of Safety Significant SSCs and Commerial Grade Item Dedication", additional time is required to complete the revision to TFC-ENG-DESIGN-C-06 to complete these corrective actions. GL Faust per telecon for MA Fish 1-30-09
01/30/2009 09:18	Glaman, Linda R	CA .2 1st extension to 2-27-09 per form a-6003-0227. LBG 1-30-09 Due to the activities required to develop the new Management Directive TFC-MD-62,"Interim Direction with Revised Requirements for Procurement of Safety Significant SSCs and Commerial Grade Item Dedication", additional time is reuired to complete the revision to TFC-ENG-Design -C-06 to complete these corrective actions. GL Faust per telecon for MA Fish 1-30-09
03/18/2009 08:34	Owen, Annette	Change to Cause Analysis screen/Corrective Action plan.
03/19/2009 12:36	Owen, Annette	Change to Cause Analysis screen/Corrective Action plan.

-- End of Report --
04/09/2009 09:15 PM

Task# WRPS-PER-2008-0137			
E-STARS[R] Report Task Detail Report 04/09/2009 0915			
TASK INFORMATION			
Task#	WRPS-PER-2008-0137		
Subject	RES; ORP Surveillance of HEPA Filters		
Parent Task#		Status	CLOSED 04/09/2009
Reference		Due	05/11/2009
Originator	^PER Coordinator	Priority	Medium
Originator Phone		Category	PER
Origination Date	10/28/2008 1539	Generic1	None
Remote Task#		Generic2	None
Deliverable	PER Review	Generic3	None
Class	None	View Permissions	Global
Instructions	*No Instructions*		
ROUTING LISTS			
1	Corrective actions Routing Lis		Inactive
	To launch Corrective actions.		
	• ^PER CAs(Owen, Annette) - Assign - Completed - 04/09/2009 2034 *Instructions:*		
2	Responsible Manager		Inactive
	Review the PER Screening Tab and Senior Manager Review for requested data. Complete the task in E-STARS in accordance with TFC-ESHQ-Q_C-C-01, and TFC-ESHQ-Q_ADM-C-12 Apparent Cause Analysis & Corrective Action Planning.		
	• Fish, Michael A - Assign - Completed with comments - 11/18/2008 1544 *Instructions:*		
	• Fish, Michael A - Assign - Completed with comments - 11/18/2008 1551 *Instructions:* Did you contact the originator about the PER? Document your contact in the response window.		
3	Review Initial PER		Inactive
	Review New PER		
	• ^SO(Andrews, Jeffrey E) - Review - Concur - 10/28/2008 1545 *Instructions:*		

Task# WRPS-PER-2008-0137			
	• ^PER Screening(Brown, Nancy L) - Review - Concur - 10/30/2008 1430 *Instructions:*		
	• ^Mgr Review(Owen, Annette) - Review - Concur - 11/03/2008 0805 *Instructions:*		
ATTACHMENTS			
Attachments	1. 0802533_08-ESQ-246_WRPS_-_[0810280673].pdf 2. CH2M-PER-2008-0137 CLOSURE CH-08-NCR-035.pdf 3. Link to PER 4. WRPS-PER-2008-0137 - Why Analysis.doc 5. WRPS-PER-2008-0137 Originator Feedback.pdf		
COMMENTS			
Poster	Fish, Michael A (Jones, Terry) - 11/18/2008 0311		
	Completed		
	Cause codes added. Causal analysis completed. Corrective actions identified and assigned. These actions complete this task and PER.		
Poster	Fish, Michael A (Jones, Terry) - 11/18/2008 0311		
	Completed		
	PER originator contacted. Attached file, WRPS-PER-2008-0137 Originator Feedback.pdf, is electronic documentation of contact.		
Poster	^PER Coordinator (Glaman, Linda R) - 01/30/2009 0901		
	Due Date Extension		
	CA .3 1st extension to 3-15-09 per form a-6003-227. LBG 1-30-09 Due to the activities required to develop the new Management Directive TFC-MD-62, "Interim Direction with Revised Requirements for Procurement of Safety Significant SSCs and Commerial Grade Item Dedication", additional time is required to complete the revision to TFC-ENG-DESIGN-C-06 to complete these corrective actions. GL Faust per telecon for MA Fish 1-30-09		
Poster	^PER Coordinator (Owen, Annette) - 04/09/2009 0804		
	CLOSED		
	All Corrective Actions closed.		
TASK DUE DATE HISTORY			
Modified	03/18/2009 0838 - ^PER Coordinator (Owen, Annette)	New Due Date	05/11/2009 0000
Modified	01/30/2009 0913 - ^PER Coordinator	New Due Date	03/26/2009 0000
Modified	12/03/2008 0923 - ^PER Coordinator	New Due Date	02/23/2009 0000
Modified	11/03/2008 0805 - ^PER Coordinator	New Due Date	12/12/2008 1630

Task# WRPS-PER-2008-0137			
Modified	11/03/2008 0805 - ^PER Coordinator	New Due Date	12/12/2008 1630
Modified	10/28/2008 1539 - ^PER Coordinator	New Due Date	10/30/2008 1630
SUB TASK HISTORY			
Subtask#	WRPS-PER-2008-0137.1		
Subject	WRPS-PER-2008-0137; RES; Issue a Non-Conformance Report (NCR) to justify continued use of radial filters procured prior to revision 4 of RPP-SPEC-2867		
Originator	^PER CAs		
	Routing List	*No Active Routing List*	
Subtask#	WRPS-PER-2008-0137.2		
Subject	WRPS-PER-2008-0137; RES; Issue a revision of the Engineering Change Notice Procedure, TFC-ENG-DESIGN		
Originator	^PER CAs		
	Routing List	*No Active Routing List*	
Subtask#	WRPS-PER-2008-0137.3		
Subject	WRPS-PER-2008-0137; RES; Issue a required reading to qualified system engineers, engineering manager		
Originator	^PER CAs		
	Routing List	*No Active Routing List*	
-- end of report --			

Task# WRPS-PER-2008-0137.1

E-STARS[R] Report
Task Detail Report
04/09/2009 0915

TASK INFORMATION

Task#	WRPS-PER-2008-0137.1		
Subject	WRPS-PER-2008-0137; RES; Issue a Non-Conformance Report (NCR) to justify continued use of radial filters procured prior to revision 4 of RPP-SPEC-2867		
Parent Task#	WRPS-PER-2008-0137	Status	CLOSED 12/10/2008
Reference	WRPS-PER-2008-0137	Due	12/11/2008
Originator	^PER CAs	Priority	Medium
Originator Phone		Category	PER
Origination Date	12/03/2008 0923	Generic1	None
Remote Task#		Generic2	None
Deliverable	PER Review	Generic3	None
Class	None	View Permissions	Global
Instructions	*No Instructions*		

ROUTING LISTS

1	Corrective Action	Inactive
	Issue a Non-Conformance Report (NCR) to justify continued use of radial filters procured prior to revision 4 of RPP-SPEC-28675. Deliverable: Copy of Issued Non-Conformance Report. RESPONSIBLE MANAGER: When this corrective action is complete, enter a closure statement in E-STARS and close the E-STARS subtask. Refer to the Problem Evaluation Request procedure TFC-ESHQ-Q-C-C-01, Section 4.4 for closure documentation requirements	
	• Cannon, Joel M - Assign - Completed with comments - 12/03/2008 0959 *Instructions:*	
	• Fish, Michael A - Review - Concur - 12/10/2008 1030 *Instructions:*	

ATTACHMENTS

Attachments	1. 0802533_08-ESQ-246_WRPS_-_[0810280673].pdf 2. CH2M-PER-2008-0137 CLOSURE CH-08-NCR-035.pdf 3. Link to PER 4. NCR 035.pdf 5. WRPS-PER-2008-0137 - Why Analysis.doc 6. WRPS-PER-2008-0137 Originator Feedback.pdf

Task# WRPS-PER-2008-0137.1			
COMMENTS			
Poster	Cannon, Joel M - 12/03/2008 0912		
	Completed		
	NCR number CH-08-NCR-035 was issued 11/19/2008.		
Poster	^PER CAs (Owen, Annette) - 12/10/2008 1012		
	CLOSED		
	Clousure evidence is adequate to close this action.		
TASK DUE DATE HISTORY			
Modified	12/03/2008 0923 - ^PER CAs	New Due Date	12/11/2008 0000
Modified	12/03/2008 0923 - ^PER CAs	New Due Date	02/23/2009 0000
SUB TASK HISTORY			
No Subtasks			
-- end of report --			

Task# WRPS-PER-2008-0137.2			
E-STARS[R] Report Task Detail Report 04/09/2009 0915			
TASK INFORMATION			
Task#	WRPS-PER-2008-0137.2		
Subject	WRPS-PER-2008-0137; RES; Issue a revision of the Engineering Change Notice Procedure, TFC-ENG-DESIGN		
Parent Task#	WRPS-PER-2008-0137	Status	CLOSED 03/02/2009
Reference	WRPS-PER-2008-0137	Due	03/06/2009
Originator	^PER CAs	Priority	Medium
Originator Phone		Category	PER
Origination Date	12/03/2008 0923	Generic1	None
Remote Task#		Generic2	None
Deliverable	PER Review	Generic3	None
Class	None	View Permissions	Global
Instructions	*No Instructions*		
ROUTING LISTS			
1	Corrective Action		Inactive
	Issue a revision of the Engineering Change Notice Procedure, TFC-ENG-DESIGN-C-06 and/or the ECN form and instructions to ensure that impacts on in-process or prior procurements are considered when making changes to procurement specifications or other documents and to question whether a Non-Conformance Report needs to be issued associated with the change. Deliverable: Copy of revised procedure TFC-ENG-DESIGN-C-06 and/or revised ECN Form. RESPONSIBLE MANAGER: When this corrective action is complete, enter a closure statement in E-STARS and close the E-STARS subtask. Refer to the Problem Evaluation Request procedure TFC-ESHQ-Q-C-C-01, Section 4.4 for closure documentation requirements		
	• Faust, Gary L - Assign - Completed with comments - 02/27/2009 1316 *Instructions:*		
	• Fish, Michael A - Review - Concur with comments - 02/27/2009 1354 *Instructions:*		
	• Fish, Michael A - Review - Concur with comments - 03/02/2009 1330 *Instructions:* This PER with Resolution task cannot be closed until procedure TFC-ENG-DESIGN-C-06 has been issued and a copy attached. The ADCA is not sufficient.		
ATTACHMENTS			

Task# WRPS-PER-2008-0137.2	
Attachments	1. 0802533_08-ESQ-246_WRPS_-_[0810280673].pdf 2. CH2M-PER-2008-0137 CLOSURE CH-08-NCR-035.pdf 3. Link to PER 4. TFC-ENG-DESIGN-C-06, Rev G-5 Signed ADCA.pdf 5. WRPS-PER-2008-0137 - Why Analysis.doc 6. WRPS-PER-2008-0137 Originator Feedback.pdf 7. WRPS-PER-2008-0137.2 TFC-ENG-DESIGN-C-06 Rev 5.pdf
COMMENTS	
Poster	^PER Coordinator (Glaman, Linda R) - 01/30/2009 0901
	Due Date Extension
	CA .2 1st extension to 2-27-09 per form a-6003-0227. LBG 1-30-09 Due to the activities required to develop the new Management Directive TFC-MD-62,"Interim Direction with Revised Requirements for Procurement of Safety Significant SSCs and Commerial Grade Item Dedication", additional time is reuired to complete the revision to TFC-ENG-Design -C-06 to complete these corrective actions. GL Faust per telecon for MA Fish 1-30-09
Poster	Faust, Gary L - 02/27/2009 0102
	Completed
	A revision of the Engineering Change Notice Procedure, TFC-ENG-DESIGN-C-06 (Rev G-2) has been approved and forwarded to the Procedures Group for issue (see attached approved ADCA). This revision adds requirements to ensure that impacts on in-process or prior procurements are considered when making changes to procurement specifications or other documents, and to initiate a Non-Conformance Report to document any identified impacts with the change. This completes the corrective action, and the Task can be closed.
Poster	Fish, Michael A - 02/27/2009 0102
	Concur
	I agree with the proposed changes to the ECN procedure (TFC-ENG-DESIGN-C-06 Rev G-5). This action is now closed.
Poster	Fish, Michael A (Jones, Terry) - 03/02/2009 0103
	Concur
	TFC-ENG-DESIGN-C-06 was revised and released on 02/27/2009. Attached file, WRPS-PER-2008-0137.2 TFC-ENG-DESIGN-C-06 Rev 5.pdf, is electronic documentation of revised and released procdure. This action completes this task.
Poster	^PER CAs (Owen, Annette) - 03/02/2009 0103
	CLOSED
	Closure statement and attached documentation are adequate to close this action.
TASK DUE DATE HISTORY	

Task# WRPS-PER-2008-0137.2			
Modified	01/30/2009 0918 - ^PER Coordinator	New Due Date	02/27/2009 0000
Modified	12/03/2008 0923 - ^PER CAs	New Due Date	02/05/2009 0000
Modified	12/03/2008 0923 - ^PER CAs	New Due Date	02/23/2009 0000
SUB TASK HISTORY			
No Subtasks			
-- end of report --			

Task# WRPS-PER-2008-0137.3			
E-STARS[R] Report Task Detail Report 04/09/2009 0915			
TASK INFORMATION			
Task#	WRPS-PER-2008-0137.3		
Subject	WRPS-PER-2008-0137; RES; Issue a required reading to qualified system engineers, engineering manager		
Parent Task#	WRPS-PER-2008-0137	Status	CLOSED 04/09/2009
Reference	WRPS-PER-2008-0137	Due	05/04/2009
Originator	^PER CAs	Priority	Medium
Originator Phone		Category	PER
Origination Date	12/03/2008 0923	Generic1	None
Remote Task#		Generic2	None
Deliverable	PER Review	Generic3	None
Class	None	View Permissions	Global
Instructions	*No Instructions*		
ROUTING LISTS			
1	Corrective Action		Inactive
	Issue a required reading to qualified system engineers, engineering managers, and quality assurance engineers regarding changes to TFC-ENG-DESIGN-C-06 addressing impacts to procurements. Deliverable: Copy of required reading and evidence of 100% completion. RESPONSIBLE MANAGER: When this corrective action is complete, enter a closure statement in E-STARS and close the E-STARS subtask. Refer to the Problem Evaluation Request procedure TFC-ESHQ-Q-C-C-01, Section 4.4 for closure documentation requirements		
	• Faust, Gary L - Assign - Completed with comments - 03/02/2009 1008 *Instructions:*		
	• Fish, Michael A - Review - Concur - 03/02/2009 1334 *Instructions:*		
	• Fish, Michael A - Review - Concur with comments - 04/08/2009 1420		

Task# WRPS-PER-2008-0137.3	
	Instructions: The deliverable states "evidence of 100% completion.", but there is no evidence of completion. Please provide evidence of completion of this required reading.
ATTACHMENTS	
Attachments	1. 0802533_08-ESQ-246_WRPS_-_[0810280673].pdf 2. CH2M-PER-2008-0137 CLOSURE CH-08-NCR-035.pdf 3. Link to PER 4. WRPS-PER-2008-0137 - Why Analysis.doc 5. WRPS-PER-2008-0137 Originator Feedback.pdf 6. WRPS-PER-2008-0137.3 CLOSURE 100% REQ READ COMPLETE.pdf
COMMENTS	
Poster	^PER Coordinator (Glaman, Linda R) - 01/30/2009 0901
	Due Date Extension
	CA .3 1st extension to 3-15-09 per form a-6003-227. LBG 1-30-09 Due to the activities required to develop the new Management Directive TFC-MD-62, "Interim Direction with Revised Requirements for Procurement of Safety Significant SSCs and Commerial Grade Item Dedication", additional time is required to complete the revision to TFC-ENG-DESIGN-C-06 to complete these corrective actions. GL Faust per telecon for MA Fish 1-30-09
Poster	Faust, Gary L - 03/02/2009 1003
	Completed
	WRPS Required Reading RR-09-004 (attached) has been issued on TFC-ENG-DESIGN-C-06, Rev G-5, Engineering Document Control. This completes this task, and this task can be closed.
Poster	^PER CAs (Owen, Annette) - 03/18/2009 0803
	2nd extension to 5/4/09 per form A-6003-227.
	Due to higher priority work, vacations, illness, etc., additional time is required to obtain 100% completion of Required Reading RR-09-004. The Required Reading has been issued and have obtained 65% completion to date. Terry Jones for Mike Fish
Poster	Fish, Michael A (Jones, Terry) - 04/08/2009 0204
	Concur
	100% completed. Attached file, WRPS-PER-2008-0137.3 CLOSURE 100% REQ READ COMPLETE.pdf, is electronic documentation of completed deliverable. No further action is required.
Poster	^PER CAs (Owen, Annette) - 04/09/2009 0804
	CLOSED
	Closure statement and attached documentation are adequate to close this action.
TASK DUE DATE HISTORY	

Task# WRPS-PER-2008-0137.3			
Modified	03/18/2009 0839 - ^PER CAs (Owen, Annette)	New Due Date	05/04/2009 0000
Modified	01/30/2009 0913 - ^PER Coordinator	New Due Date	03/15/2009 0000
Modified	12/03/2008 0923 - ^PER CAs	New Due Date	02/19/2009 0000
Modified	12/03/2008 0923 - ^PER CAs	New Due Date	02/23/2009 0000
SUB TASK HISTORY			
No Subtasks			
-- end of report --			

INCOMING CORRESPONDENCE COVERSHEET

CORR-2008-0011

Author	Addressee	Correspondence No.
SJ Olinger/ORP	WJ Johnson/WRPS	0802533 DOE-ORP: 08-ESQ-246

Subject: CONTRACT NO. DE-AC27-08RV14800 – WASHINGTON RIVER PROTECTION SOLUTIONS LLC SURVEILLANCE REPORT S-08-ESQ-TANKFARM-017 – TANK FARM IMPLEMENTATION OF QUALITY ASSURANCE PROGRAM (QAP) REQUIREMENTS FOR TESTING AND STORAGE OF HIGH EFFICIENCY PARTICULATE AIR (HEPA) FILTERS FOR TANK FARM USE

DISTRIBUTION

Washington River Protection Solutions
WRPS Correspondence Control
JC Allen-Floyd
JM Armstead
F Beranek
HS Berman
MN Brosee ((Assignee))
GJ Johnson
WJ Johnson
MA Lindholm
KJ Rueter
SM Sax
JM Shelt
BR Thomas

Priority:	**NORMAL**
Assignee:	M. N. Brosee
Received:	October 28, 2008
Due Date:	11/28/2008 – Respond to the assessment finding as directed by ORP.

WRPS Correspondence Control
For Questions call: 376-0271
Outlook Address: **^WRPS Correspondence Control**

U.S. Department of Energy
Office of River Protection
P.O. Box 450, MSIN H6-60
Richland, Washington 99352

OCT 2 8 2008

08-ESQ-246

0802533

Mr. William J. Johnson
President and Project Manager
Washington River Protection Solutions
2440 Stevens Center Place
Richland, Washington 99352

Dear Mr. Johnson:

CONTRACT NO. DE-AC27-08RV14800 – WASHINGTON RIVER PROTECTION SOLUTIONS LLC SURVEILLANCE REPORT S-08-ESQ-TANKFARM-017 – TANK FARM IMPLEMENTATION OF QUALITY ASSURANCE PROGRAM (QAP) REQUIREMENTS FOR TESTING AND STORAGE OF HIGH EFFICIENCY PARTICULATE AIR (HEPA) FILTERS FOR TANK FARM USE

This letter transmits the results of the U.S. Department of Energy (DOE), Office of River Protection surveillance of the implementation of QAP requirements for testing and storage of HEPA filters. The surveillance was performed from September 16 through 18, 2008. The purpose of the surveillance was to evaluate implementation of the DOE-Standard-3020, "Specification for HEPA Filters Used by DOE Contractors" with respect to the Tank Operations Contract (TOC) processes for procurement, testing, and storage of HEPA filters used within the Tank Farm. This included review of HEPA filter Engineering Specifications, procurement documents, receipt inspection documents, and HEPA filter storage. The purpose of the review was to validate that DOE HEPA filter testing and storage requirements recently issued to improve filter performance were being implemented by the TOC. The surveillance identified one finding and one observation. The specific issues are:

- S-08-ESQ-TANKFARM-017-F01: Recently installed HEPA filters that are nonconforming to the current procurement specification were not documented as nonconforming and dispositioned for use at the time of installation as required; and

- S-08-ESQ-TANKFARM-017-O01: HEPA filter procurement specifications HNF–S–0477, Revision 6 and HNF–S–0552, Revision 5 were not updated to comply with DOE-STD-3020-2005, "Specification for HEPA Filters Used by DOE Contractors."

Within 30 days of receipt of this letter you should respond to the assessment finding. For the finding, your response should include:

- The causes of the finding;

- The corrective actions that have been taken to control or remove any adverse impact from noncompliant conditions (remedial actions) and the results achieved;

- The corrective actions that will be taken to identify the extent of condition, correct the cause(s), and prevent further findings; and

- The date when all corrective actions will be completed, verified, and compliance to applicable requirements achieved.

This letter is not considered to constitute a change to the Contract. In the event the Contractor disagrees with this interpretation, it must immediately notify the Contracting Officer orally, and otherwise comply with the requirements of the Contract clause entitled 52.243-7, "Notification of Changes."

If you have any questions, please contact me, or your staff may contact William J. Taylor, Assistant Manager, Office of Environmental Safety and Quality, (509) 376-7851.

Sincerely,

for Shirley J. Olinger, Manager
Office of River Protection

ESQ:PPC

Attachment

cc w/attach:
G. M. McCann, PAC
W. L. Smoot, PAC
D. A. Brockman, RL
WRPS Correspondence

RECEIVED
OCT 2 8 2008
WRPS
CORRESPONDENCE CONTROL

Attachment
08-ESQ-246

Office of River Protection

Surveillance Report

Division: Office of Environmental Safety and Quality

Surveillant: W. L. Smoot, Project Assistance Corporation (Team Leader)

L.J. Croy, (Team Member)

Surveillance Number: S-08-ESQ-TANKFARM-017

Date Completed: September 18, 2008

Organization: U.S. Department of Energy, Office of River Protection, Tank Farms

Facility: Tank Farms

Title: Quality Review of Testing and Storage of HEPA Filters For Tank Farm Use

Surveillance Scope:

The surveillance evaluated implementation of the U.S. Department of Energy (DOE) Quality Assurance (QA) program requirements through CH2M HILL Hanford Group, Inc.'s (CH2M HILL) Quality Assurance Program and DOE-STD-3020-2005, "Specification for HEPA Filters Used by DOE Contractors" with respect to CH2M HILL's processes for procurement, testing, and storage of High-Efficiency Particulate Air (HEPA) filters used within the Tank Farm. This included review of HEPA filter Engineering Specifications, procurement documents, receipt inspection documents, and HEPA filter storage. The surveillance was performed to:

- Ensure that the HEPA filters currently being stored in spares and convenient storage have been tested by DOE's Filter Test Facility (FTF).
  - 100% for safety related
  - Tested on a documented and reasonable sampling plan for non-safety related
- Evaluate if HEPA filters currently being ordered are all required by specification to be tested at the FTF (regardless of safety class, as a conservative approach).
- Ensure no filters in stock have expired shelf life.

Executive Summary:

A review of the CH2M HILL process for procurement, testing, and storage of HEPA filters to verify that DOE-STD-3020-2005 requirements were being met identified that in most cases, the DOE Standard is being met. All HEPA filters, regardless of safety class with a system flow greater than 20 actual cubic feet per minute (acfm), are sent to the FTF for additional testing prior to delivery for site use. There has been extensive discussion between DOE Office of River Protection (ORP) and CH2M HILL regarding the need for FTF testing of breather filters that have a rated capacity greater than 20 cubic feet per minute (cfm) but an actual application with air flow less than 20 cfm. This surveillance was not intended to further evaluate the engineering aspects of that issue, but was designed to ensure that filters designated as needing to meet the DOE Standard specification for HEPA filters were appropriately controlled.

A review of procurement specifications used by CH2M HILL to procure HEPA filters, HEPA filter HNF – S – 0477 Revision 6, "Procurement Specification for Standard, Nuclear Grade, High Efficiency Particulate Air (HEPA) Filters," (Do not conform to ASME AG-1) and HNF – S – 0552 Revision 5, "Procurement Specification for Standard, Nuclear Grade, High Efficiency Particulate Air (HEPA) Filters," (For American Society of Mechanical Engineers [ASME] AG-1 Compliant Filters) identified that they do not comply with DOE-STD-3020-2005. In a February 20, 2006, letter from CH2M HILL to ORP, justification for not testing radial filters with less than 20 acfm air flow was provided based on DOE-STD-3020-2005. However, review of the above noted HEPA filter procurement specifications identified that they were not updated to include the rest of the new requirements contained in the Standard. Several examples were identified and are discussed in the observation.

The surveillance did not identify adequate contract language to establish the expectation that the Tank Operations Contract (TOC) is required to be using DOE-STD-3020-2005. However, because the standard was used as a source document to justify not performing previously ORP directed work, CH2M HILL should have also addressed full implementation of the Standard. After it was identified that the radial breather filters were actually rated at 40 cfm, email correspondence was initiated in which ORP requested the status of CH2M HILL complying with the previous ORP filter testing requirements. A review of records did not identify a response from the contractor. However, the recent revision to the radial HEPA filter procurement specification to update filter testing requirements noted that the reason for the change was, "As directed by an ORP representative, radial filters will be sent and tested at the DOE designated Filter Test Facility (FTF)." The surveillance team did not identify any objective evidence that ORP had provided direction to CH2M HILL. As such the justification provided by the TOC for the change appears to be wrong.

The surveillance did not identify the use or need of a sampling plan for non-safety related filters that the standard applied to. CH2M HILL performs 100% testing on all applicable HEPA filters.

A review of the current revision of procurement specifications that cover all categories of filters used in the tank farms identified that all filters that have a use to support 20 acfm or greater and the radial filters rated at 40 cfm and currently used as single shell breather filters with an expected use less than 20 acfm, are 100 % tested at the FTF. Tank Farms is currently evaluating the use of axial HEPA filters with a rated and actual use less than 20 cfm. Discussions with CH2M HILL engineers noted that the axial filters would not meet DOE HEPA filter standard applicability and as such, would not be tested at the FTF.

The surveillance team conducted a walk down of HEPA filter storage and identified that the area was clean, organized, and HEPA filters were protected from environmental and physical damage. Shelf life and proof of testing labels were clear on each filter box. No filters were identified with expired shelf life.

As a result of this surveillance, ORP identified one finding and one observation. Specifically,

- S-08-ESQ-TANKFARM-017-F01, Recently installed HEPA filters that are nonconforming to the current procurement specification were not documented as nonconforming and dispositioned for use at the time of installation as required.

- S-08-ESQ-TANKFARM-017-O01, HEPA filter procurement specifications HNF – S – 0477, Revision 6 and HNF – S – 0552, Revision 5 were not updated to comply with DOE-STD-3020-2005, "Specification for HEPA Filters Used by DOE Contractors."

Personnel Interviewed:

- J.D. Bingham, CH2M HILL

- T.R. Farris, CH2M HILL

- D.G. Baide, CH2M HILL

- D.H. Irby, ORP

- J. Aguliar, FH

Documents Reviewed:

- DOE-STD-3020-2005, "Specification for HEPA Filters Used by DOE Contractors"

- HNF – S – 0477 Revision 6, "Procurement Specification for Standard, Nuclear Grade, High Efficiency Particulate Air (HEPA) Filters," (Do not conform to ASME AG-1)

- HNF – S – 0552 Revision 5, "Procurement Specification for Standard, Nuclear Grade, High Efficiency Particulate Air (HEPA) Filters," (For ASME AG-1 Compliant Filters)

- RPP-SPEC-28675, Revision 4, "AG-1, Section FK Special HEPA Filters (Radial and Axial) Procurement Specification"

- CH2M-0301188 R2, Spears to Smith, dated February 20, 2006, "Deployment of Radial HEPA Filters Without Being Tested at the U.S. Department of Energy Filter Test Facility"

- Purchase Order – 00035921 – Dated July 22, 2008, HEPA-TYPE FILTER, 40 CFM Radial, 1 ½ in, MNPT, Nuclear Grade

- Quality Assurance Inspection Plan, (to be performed by Acquisition Verification Services [AVS])

- AVS Procurement Quality Clauses, dated – February 25, 2008

- AVS Inspection Report dated – September 4, 2008

- AVS Inspection Report dated – June 2, 2008

Findings and Observations:

S-08-ESQ-TANKFARM-017-F-01, Recently installed HEPA filters that are nonconforming to the current procurement specification were not documented as nonconforming and dispositioned for use at the time of installation as required.

Criteria:
Ensure that the HEPA filters currently being stored in spares and convenient storage have been tested by DOE's filter test facility / filter test laboratory.

- 100% for safety related

- Tested on a documented and reasonable sampling plan for non-safety related

Requirement(s):

- DOE O 414.1C, "Quality Assurance," Attachment 2 – Contractor Requirements Document, Section 3.g(1), - Procure items and services that meet established requirements and perform as specified.

- ASME NQA-1-2000, "Quality Assurance Requirements for Nuclear Facility Applications," Requirements 15, Control of Nonconforming Items,

  - 100 Basic – Items that do not conform to specified requirements shall be controlled to prevent inadvertent installation or use. Controls shall provide for identification, documentation, evaluation, segregation when practical, and disposition of nonconforming items, and for notification to affected organizations.

  - 200 Identification – Nonconforming items shall be identified by legible marking, tagging, or other methods not detrimental to the item, on either the item, the container, or the package containing the item.

  - 401 Control – Nonconforming items shall be evaluated and recommended dispositions shall be proposed. Further processing, delivery, installation, or use of a nonconforming item shall be controlled pending the evaluation and an approved disposition by authorized personnel.

- CH2M HILL, TFC-PLN-02, "Quality Assurance Program Description," Chapter 15, Control of Nonconforming Items,

1.1.1 Basic

Items that do not conform to specified requirements shall be controlled to prevent inadvertent installation or use. Controls shall provide for identification, documentation, evaluation, segregation when practical, and disposition of nonconforming items, and for notification to relevant organizations.

1.1.2 Identification

Nonconforming items shall be identified by legible marking, tagging, or other methods not detrimental to the item, the container, or the package containing the item.

1.1.3 Segregation

Nonconforming items shall be segregated, when practical, by placing them in a clearly identified and designated hold area until properly dispositioned.

When segregation is impractical or impossible due to physical conditions such as size, weight, or access limitations, other precautions shall be employed to preclude inadvertent use of the nonconforming item.

1.1.4 Disposition

Nonconforming items shall be evaluated, and recommended dispositions shall be proposed. Further processing, delivery, installation, or use of a nonconforming item shall be controlled pending the evaluation and an approved disposition by authorized personnel.

Discussion:

Contrary to the above requirements, radial HEPA filters were recently received, inspected by AVS, and placed into the Fluor Daniel Hanford, Inc. (FDH) ware house supply system as acceptable for tank farm use without formal evaluation to the CH2M HILL procurement specification requirement that the radial filters be sent to and tested at the DOE designated FTF.

On February 20, 2006, CH2M HILL informed DOE/ORP that based on allowances in DOE-STD-3020-2005, "Specification for HEPA Filters Used by DOE Contractors," without requiring that these filters be tested at the FTF, CH2M HILL planned to deploy radial HEPA filters that had an application of less than 20 acfm.

On July 22, 2008, CH2M HILL issued a Purchase Order (PO) for 10 HEPA-Type Filters, 40 CFM Radial, consistent with the February 2006 letter, without a requirement that the filters be sent to and tested at the DOE FTF. As such, the receipt inspection documentation provided with the PO did not have a requirement for validation of a sticker from the DOE FTF.

On August 12, 2008, CH2M HILL issued an Engineering Change Notice that included a new requirement in Section 4.1.1.3 which states "As directed by an ORP representative, radial filters will be sent and tested at the DOE designated Filter Test Facility (FTF)."

On September 4, 2008, AVS, using an inspection plan provided by CH2M HILL, accepted the radial HEPA filters which were then placed into the warehouse and staged for unrestricted use by Tank Farms, without validation of a sticker from the DOE FTF.

Discussions with the CH2M HILL System Engineer for Single-Shell Tank HEPA filter support identified that CH2M HILL recognized that the new filters did not meet the revised specification, had discussed this with DOE ORP Engineering representatives, and planned to use the filters for upcoming filter change outs until FTF tested filters were received. However, the procurement/engineering process did not flag the filters that were received as nonconforming to the current specification at the time of installation. As such, a documented justification in accordance with CH2M HILL QA requirements was not provided as to why filters that were not in accordance with the revised procurement specification were acceptable for field installation.

It was also provided during discussion that at least two of the filters have been installed in Tank Farms.

S-08-ESQ-TANKFARM-017-O-01, HEPA filter procurement specifications HNF – S – 0477, Revision 6 and HNF – S – 0552, Revision 5 were not updated to comply with DOE-STD-3020-2005, "Specification for HEPA Filters Used by DOE Contractors"

Criteria:
Evaluate if HEPA filters currently being ordered are all required by specification to be tested at the FTF (regardless of safety class, as a conservative approach).

Discussion:
HEPA filter procurement specifications used by CH2M HILL to procure HEPA filters for use in the Tank Farms were not updated to comply with the requirements of DOE-STD-3020-2005. This condition existed even though in a letter, CH2M-0301188 R2, dated February 20, 2006, CH2M HILL provide justification for procuring radial HEPA filters by referencing DOE-STD- 3020-2005 which exempts filters with low-flow or less than 20 cfm from this requirement.

During the review of CH2M HILL's procurement specifications for HEPA filters, it was identified that the current revisions of both HNF – S – 0477, Revision 6, and HNF – S – 0552, Revision 5, were written to the DOE-STD-3020-97 version. While these documents are controlled by FDH, they are used by the TOC to procure HEPA filters to support Tank Farm needs. This issue is being documented as an Observation since appropriate contract direction has not been established between ORP and the TOC regarding the applications of DOE-STD-3020-2005.

A more detailed review of both procurement specifications used by CH2M HILL resulted in identifying instances where the procurement specifications are not updated with the technical content of DOE-STD-3020-2005. The following are some examples where the procurement specifications differ or are lacking specific information from the 2005 version of DOE-STD- 3020. The list is not all inclusive and only gives examples for updating with the current standard.

HNF – S – 0552 Revision 5:

- 4.2.3.b: does not specify the requirement for the sealant to be non-flammable as defined in ASTM D 92: e.g., no flash a 450°F (232°C) or below: with fire retardant rating of V-0 per UL-94. The gelatinous seal substance shall be corrosion resistant, shall not relax, crack, separate, or stick or adhere to the knife-edge, and shall be insoluble in water. Evaporation shall be less than 2% when tested in accordance with SAE AS-8660C for 24 hours at 390 0 F (198 0 C).

- Table 5.2 Tolerances for ASME AG-1, Filter Cases: no tolerances given for the width of gasket surfaces.

HNF – S – 0477 Revision 6:

- 4.2.3.c Table 1: does not specify all the requirements for a gelatinous seal. (e.g., Evaporation shall be less than 2% when tested in accordance with SAE AS-8660C for 24 hours at 390 0 F (198 0 C)).

- 4.3.2. Filter case design requirements for metal and wood cases are lacking specific detailed information on construction and approved fasteners.

- 5.3 DOE Filter test Facility Quality Assurance Testing section references the 1999 version of DOE-STD-3025 is outdated.

ORIGINAL

NONCONFORMANCE REPORT

Document No. CH-08-NCR-035

1. Job Control Number/W.O./P.O.	2. Project and Facility/System	3. Item/Material I.D. No.
PO 35921	Radial Breather Filters	CAT ID 0000632916

4. Dwg./Spec./Other No./Rev.	5. Safety Class
RPP-SPEC-28675, Rev.4	GS

6. Code Items

ASME Pressure Vessel? (●) No ( ) Yes | NEC Item? ( ) No ( ) Yes | WAC IQRPE Item? (●) No ( ) Yes

7. Problem Evaluation Request No.	8. Facility Manager/Shift Operations advised of condition for Occurrence Report evaluation?
WRPS-PER-2008-0137	[X] Yes - Originator Initial and Date:

DESCRIPTION OF NONCONFORMANCE

9. Description of Nonconformance

(a) Required Condition/Origin of Requirement:

RPP-SPEC-28675, Rev.4 dated 8/12/2008 added requirement 4.1.1.3 "As requested by ORP, Radial Filters will be sent and tested at the DOE designated Filter Test Facility (FTF)."

(b) Actual Condition:

Ten filters were ordered on 7/22/2008 to RPP-SPEC-28675, Rev.3 which did not require testing at the FTF. DOE Finding S-08-ESQ-TANKFARM-017-F-01 indicated this condition requires a Nonconformance Report be issued and dispositioned prior to installation of filters not sent to the FTF.

10. Originator (Print name, sign, and date)	11. Cognizant QA Rep. Validation (Print name, sign, and date)
Joel Cannon Joel Cannon 11/19/08	Jim Logston [signature] 11-19-08

STATUS TAGS

11.1 Tag Number (CH-NCR-YY-XXX-XXX)	Description	Installed (Signature)	Date	Removed (Signature)	Date
Dispositioned use-as-is Before tags were installed JL					11/19/08

ORIGINAL

NONCONFORMANCE REPORT (continued)

Document No. CH-08-NCR-035

DISPOSITION

12. **Interim Disposition and Approval**

(●) N/A ( ) Conditional Accept/Use ( ) Other

Description: (Use only if actions are needed prior to determining final disposition or to facilitate continued work or testing on a conditional and controlled basis)

APPROVALS

12.1 Engineering Representative (Print name, sign, and date)	12.2 Responsible Organization's QA Representative (Print name, sign, and date)
12.3 Code Inspector (If applicable - See Block 6)	12.4 Other (Provide organization/discipline represented - then print name, sign, and date)

INTERIM DISPOSITION CLOSURE

13. Interim Disposition Complete ( ) Complete (●) N/A

Closure: _____ _____ _____

Printed Name Signature Date

(Originating Organization's QA Representative or QA Manager)

14. **Final Disposition and Approval**

(●) Use-As-Is ( ) Reject ( ) Repair ( ) Rework

(a) Technical Justification for "Use-As-Is" and "Repair" dispositions. ECN No: N/A (If ECN is N/A, explain.)

The TFC issued radial filter specification RPP-SPEC-28675 Rev 4 on 8/12/08. The specification change (Rev 3 to Rev 4) included the statement that radial filters will be tested at the DOE filter test facility. Filters purchased prior to this date did not have to be tested at the filter test facility. Engineering has reviewed the design and use of the radial filters ordered prior to 8/12/08 and considers that these prior ordered radial filters are identical in design and construction to filters ordered to RPP-SPEC-28675 Rev 4 and note that the filters have been tested and certified as HEPA filters (99.9% efficient-particle removal) at Flanders Inc. Engineering therefore considers these units fit for continued use.

(b) Instructions for Completion of the Final Disposition, including inspection criteria for "Repair" and "Rework" dispositions. For "Reject" dispositions, identify method of disposal, e.g., scrap, return to vendor or other. (N/A for "Use-As-Is" dispositions.)

APPROVALS

14.1 Engineering Representative (Print name, sign, and date) Mike Fish M. S. Fish 11/19/08	14.2 QA Representative (Print name, sign, and date) Joel Cannon Joel Cannon 11/19/08
14.3 Code Inspector (If applicable - See Block 6) N/A	14.4 Other (Provide organization/discipline represented - then print name, sign, and date) N/A

ORIGINAL

NONCONFORMANCE REPORT (continued)

Document No. CH-08-NCR-035

CLOSURE

15. Disposition Complete and Acceptable (●) OR "Follow-on" NCR issued ( ) Follow-on NCR No.: _____

Closure: Joel Cannon (Printed Name) Joel Cannon (Signature) 11/19/08 (Date)

(Originating Organization's QA Representative or QA Manager)

ORIGINAL

NONCONFORMANCE REPORT

Document No. CH-08-NCR-035

1. Job Control Number/W.O./P.O.	2. Project and Facility/System	3. Item/Material I.D. No.
PO 35921	Radial Breather Filters	CAT ID 0000632916

4. Dwg./Spec./Other No./Rev.	5. Safety Class
RPP-SPEC-28675, Rev.4	GS

6. Code Items

ASME Pressure Vessel? (●) No ( ) Yes | NEC Item? ( ) No ( ) Yes | WAC IQRPE Item? (●) No ( ) Yes

7. Problem Evaluation Request No.	8. Facility Manager/Shift Operations advised of condition for Occurrence Report evaluation?
WRPS-PER-2008-0137	[X] Yes - Originator Initial and Date:

DESCRIPTION OF NONCONFORMANCE

9. Description of Nonconformance

(a) Required Condition/Origin of Requirement:

RPP-SPEC-28675, Rev.4 dated 8/12/2008 added requirement 4.1.1.3 "As requested by ORP, Radial Filters will be sent and tested at the DOE designated Filter Test Facility (FTF)."

(b) Actual Condition:

Ten filters were ordered on 7/22/2008 to RPP-SPEC-28675, Rev.3 which did not require testing at the FTF. DOE Finding S-08-ESQ-TANKFARM-017-F-01 indicated this condition requires a Nonconformance Report be issued and dispositioned prior to installation of filters not sent to the FTF.

10. Originator (Print name, sign, and date)	11. Cognizant QA Rep. Validation (Print name, sign, and date)
Joel Cannon Joel Cannon 11/19/08	Jim Logston [signature] 11-19-08

STATUS TAGS

11.1 Tag Number (CH-NCR-YY-XXX-XXX)	Description	Installed (Signature)	Date	Removed (Signature)	Date
Dispositioned use-AS-IS Before Tags were installed				JC	11/19/08

ORIGINAL

NONCONFORMANCE REPORT (continued)

Document No. CH-08-NCR-035

DISPOSITION

12. **Interim Disposition and Approval**

(●) N/A ( ) Conditional Accept/Use ( ) Other

Description: (Use only if actions are needed prior to determining final disposition or to facilitate continued work or testing on a conditional and controlled basis)

APPROVALS

12.1 Engineering Representative (Print name, sign, and date)	12.2 Responsible Organization's QA Representative (Print name, sign, and date)
12.3 Code Inspector (If applicable - See Block 6)	12.4 Other (Provide organization/discipline represented - then print name, sign, and date)

INTERIM DISPOSITION CLOSURE

13. Interim Disposition Complete ( ) Complete (●) N/A

Closure: _____ _____ _____

Printed Name Signature Date

(Originating Organization's QA Representative or QA Manager)

14. **Final Disposition and Approval**

(●) Use-As-Is ( ) Reject ( ) Repair ( ) Rework

(a) Technical Justification for "Use-As-Is" and "Repair" dispositions. ECN No: N/A (If ECN is N/A, explain.)

The TFC issued radial filter specification RPP-SPEC-28675 Rev 4 on 8/12/08. The specification change (Rev 3 to Rev 4) included the statement that radial filters will be tested at the DOE filter test facility. Filters purchased prior to this date did not have to be tested at the filter test facility. Engineering has reviewed the design and use of the radial filters ordered prior to 8/12/08 and considers that these prior ordered radial filters are identical in design and construction to filters ordered to RPP-SPEC-28675 Rev 4 and note that the filters have been tested and certified as HEPA filters (99.9% efficient-particle removal) at Flanders Inc. Engineering therefore considers these units fit for continued use.

(b) Instructions for Completion of the Final Disposition, including inspection criteria for "Repair" and "Rework" dispositions. For "Reject" dispositions, identify method of disposal, e.g., scrap, return to vendor or other. (N/A for "Use-As-Is" dispositions.)

APPROVALS

14.1 Engineering Representative (Print name, sign, and date) Mike Fish M. A. Fish 11/19/08	14.2 QA Representative (Print name, sign, and date) Joel Cannon Joel Cannon 11/19/08
14.3 Code Inspector (If applicable - See Block 6) N/A	14.4 Other (Provide organization/discipline represented - then print name, sign, and date) N/A

ORIGINAL

NONCONFORMANCE REPORT (continued)

Document No. CH-08-NCR-035

CLOSURE

15. Disposition Complete and Acceptable (●) OR "Follow-on" NCR issued ( ) Follow-on NCR No.: _____

Closure: Joel Cannon (Printed Name) | Joel Cannon (Signature) | 11/19/08 (Date)

(Originating Organization's QA Representative or QA Manager)

"Why" Analysis for WRPS-PER-2008-0137

Description of Concern or Problem:

U. S. Department of Energy (DOE), Office of River Protection (ORP) conducted a surveillance of the implementation of Quality Assurance Program (QAP) requirements for testing and storage of HEPA filters. The surveillance identified the following Finding:

S-08-ESQ-TANKFARM-017-F01: Recently installed HEPA filters that are nonconforming to the current procurement specification were not documented as nonconforming and dispositioned for use at the time of installation as required.

Causal Analysis:

An apparent cause analysis using the "Why" technique was performed in accordance with TFC-ESHQ-Q_ADM-C-12

Why were radial filters that were purchased prior to issuance of revision 4 of the radial filter specification (RPP-SPEC-28675 dated 8/12/08) allowed to be used without a written justification? Revision 4 of the specification requires all radial filters to be tested at the DOE filter test facility whereas prior revisions did not require radial filters to be tested at the DOE filter test facility (A2B5C02).

The cause of this is that the consequences of the change in the specification were not adequately reviewed by Engineering. Engineering considered the prior ordered filters to be suitable for use because they conformed to their original purchase specification in all respects. There was also no change to the design, usage, or Flanders testing of these units. Engineering, however, failed to issue a documented justification for continued use of the filters (A4B5C04).

Why did Engineering did not appreciate that because the prior ordered filters did not meet the current specification they were not considered as satisfying the required specification requirements.

The cause of this was determined to be that less than adequate instructions are provided in the engineering change notice (ECN) procedure coupled with a lack of training. The ECN procedure includes the requirement to identify documents that are impacted by a change. However, instructions and training have tended to emphasize operating procedure impacts rather than procurement documents. If the ECN procedure and/or form were modified to require the responsible engineer to consider whether prior procurements are impacted by the change and to specifically question whether a non-conformance report is required to disposition changes in requirements then the impact of the specification change would have been addressed (A5B2C08 and A6B3C02). The ECN procedure and/or form should be revised to include procurement documents as a type of impacted document due to the ECN change and additional required reading provided to engineers to emphasize the need to consider the impact of in-process or prior procurements.

Jones, Teresa E (Terry)

From: Jones, Teresa E (Terry)
Sent: Tuesday, November 18, 2008 3:49 PM
To: Mata, Beth L
Cc: Jones, Teresa E (Terry)
Subject: WRPS-PER-2008-0137

Beth,

Causal analysis has been completed on the above PER.

Terry for Mike Fish

ADMINISTRATIVE DOCUMENT CHANGE AUTHORIZATION

(See page 3 for form completion instructions)

1. Current Document Number/Revision	2. Document Title
TFC-ENG-DESIGN-C-06, Rev G-4	ENGINEERING CHANGE CONTROL

3. Document Type: (●) Procedure ( ) Standard ( ) Guidance Doc. ( ) Mgmt. Directive ( ) Policy ( ) Plan ( ) Charter

4. Type of Change: ( ) New ( ) Major Revision (●) Minor Revision ( ) Administrative ( ) Periodic Review ( ) Cancellation

5. Initiated by	6. Phone	7. Mailstop	8. Date
G.L.Faust	373-0337	R2-58	2/19/09

9. Document Owner	10. Functional Area Manager
G.L.Faust	E.A.Nelson

11. Proposed Changes	12. Reason for Change
1.Section 4.1 - Add the following: "9. The impact of the design change on prior or in-process procurements shall be considered. Any impacts identified shall be addressed as part of the design change(see Section 4.2.1, Item 8). 10. Projects may track non-engineering document development outside of the Non-Engineering section of the ECN." 2. Section 4.2.1 - Add the following NEW Item 8: "8. If a change impacts a prior or in-process procurement, initiate a Nonconformance Report in accordance with TFC-ESHQ-Q_ADM-02." 3. Section 7.2 - Add a NEW Item 16 as follows: "16. TFC-ESHQ-Q_ADM-02, Nonconforming Item Reporting and Control." 4. Attachment B - Add a NEW "Design Details/ Attributes" as follows: "Impacts to prior or in-process procurements are identified, evaluated and resolved"	1. Incorporate changes as part of corrective actions to PER-2008-0137. 2. Incorporate clarifications as process improvements as part of corrective actions to PER-2008-1301.

IMPACTED PROCEDURES / DOCUMENTS

13. Document all impacted procedures/documents, procedure/document owners, whether ADCA needs to be completed

Procedure Number	Procedure Title	Document Owner	ADCA (Yes/No)
N/A			

TRAINING

14. Implementation Period: _____ Start Date _____ End Date ☒ Not applicable

15. Effective Date Upon Issue

ADMINISTRATIVE DOCUMENT CHANGE AUTHORIZATION (continued)

1. Current Document Number/Revision	2. Document Title
TFC-ENG-DESIGN-C-06, Rev G-4	ENGINEERING CHANGE CONTROL

16. Affected Groups/Organizations (Check all that apply)

	Affected	Training Required	Verification Required		Affected	Training Required	Verification Required
All Employees	☐	☐	☐	PAAA	☐	☐	☐
All Managers	☐	☐	☐	Procedures	☐	☐	☐
Assessments	☐	☐	☐	Procurement	☐	☐	☐
Communications	☐	☐	☐	Project Delivery	☐	☐	☐
Contracts	☐	☐	☐	Property	☐	☐	☐
Emergency Management	☐	☐	☐	Quality Assurance	☐	☐	☐
Engineering	☒	☐	☐	Radiological Control	☐	☐	☐
Environmental	☐	☐	☐	Safety & Health	☐	☐	☐
Finance	☐	☐	☐	Strategic Planning	☐	☐	☐
Human Resources	☐	☐	☐	Training	☐	☐	☐
Information Resource Management	☐	☐	☐	Waste Management	☐	☐	☐
ISMS	☐	☐	☐	Work Planning	☐	☐	☐
Legal	☐	☐	☐	222-S Laboratory	☐	☐	☐
Maintenance	☐	☐	☐	Not Applicable	☐		
Operations	☐	☐	☐				

17a. Indicate Method of Training:

- ☒ Required Reading with Verification
- ☐ Tailgate Meetings with Verification
- ☐ Staff Meetings with Verification
- ☐ Classroom Training with Verification
- ☐ Verbal Notification with Verification
- ☐ N/A

17b. Indicate Method of Informational Briefing:

- ☐ Face to Face Communication without Verification
- ☐ Verbal Notification without Verification
- ☐ Tailgate Meetings Without Verification
- ☐ Staff Meetings Without Verification
- ☐ Classroom Training without Verification
- ☒ N/A

18. Additional Training Requirements (Provide justification if training will not be conducted): ☐ N/A

Required Reading with Verification for all qualified engineers.

REVIEW

19. Designated Reviewing Organizations:

☐ Assessments	☐ Legal	☐ Radiological Control
☐ Communications	☐ Maintenance	☐ Safety and Health
☐ Contracts	☐ Operations	☐ Strategic Planning
☐ Emergency Management	☐ PAAA	☐ Training
☒ Engineering	☐ Procedures	☐ Waste Management
☐ Environmental	☐ Procurement	☐ Work Planning
☐ Finance	☐ Project Delivery	☐ 222-S Laboratory
☐ Human Resources	☐ Property	☐ Other _____
☐ Information Resource Management	☐ Quality Assurance	☐ Not Applicable
☐ ISMS		

ADMINISTRATIVE DOCUMENT CHANGE AUTHORIZATION (continued)

1. Current Document Number/Revision	2. Document Title
TFC-ENG-DESIGN-C-06, Rev G-4	ENGINEERING CHANGE CONTROL

APPROVALS

20.

S/RID Representative (print and sign)/Date

21. USQ

- ◯ USQ

USQ Evaluator (print and sign) & USQ Number/Date

- ◯ USQ-CAT-EX

USQ Evaluator or Individual Designated by NS&L (print and sign) & USQ Number/Date

- ◯ Out of Scope

Print Name and Sign/Date

22.

G.L. FAUST G L Faust 2/23/09

Document Owner (print and sign)/Date

E.A. NELSON E A Nelson 2/23/09

Functional Area Manager (print and sign)/Date

Procedures (print and sign)/Date

FOR ADMINISTRATIVE CHANGES ONLY:

Procedures Manager (print and sign)/Date

ADMINISTRATIVE DOCUMENT CHANGE AUTHORIZATION INSTRUCTIONS

1) Current Document Number/Revision: The current document number and revision or the new document number and revision provided by the Procedures group.

2) Document Title: The title of the procedure being revised or the title of the new procedure. (Does the title convey the intent of the procedure, not to the owner, but to the user?)

3) Document Type: Indicate document type by marking the appropriate box. (See TFC-PLN-80 for definitions.)

4) Type of Change: New procedure, a major, minor or administrative change (see TFC-BSM-AD-C-01, 5.0 Definitions) to the existing procedure, periodic review, or cancellation?

5) Initiated by: Name of the person initiating the change.

6) Initiator's Phone Number: Enter either a cell phone number or office phone number where the initiator can be reached.

7) Mail Stop: The mail stop of the initiator.

8) Date: The date of submittal for the change. (This is not the implementation date or effective date of the change.)

9) Document Owner: The person assigned by the Functional Area Manager (TFC-BSM-AD-C-01, Section 3.2). See procedure ownership matrix on the procedures web page.

10) Functional Area Manager: The person responsible for implementation of the procedure (TFC-BSM-AD-C-01, Section 3.1.) See procedure ownership matrix on the procedures web page.

11) Proposed Changes: Clearly state changes to be made.

12) Reason for the Change: Explain why the change is necessary (e.g., the process has to be modified due to a new requirement, change in organizational responsibility, etc.

13) Impacted Procedures/Documents: Ask yourself: Does the new procedure or major or minor change affect any other organizations? Does it affect any other procedures (processes) or documents in other organizations? Call the POCs for the other organizations and have them help you make sure. (The POC list hotlink is available in TFC-BSM-AD-D-01.) Perform a search for all references to the procedure being changed and list those impacted by the change. This is the document owner's responsibility to identify other impacted procedures and to fill out the additional ADCAs!

14) Implementation Period: Not applicable for minor changes only. The implementation period is the time needed to complete the training on the changes and "VERIFICATION OF THE TRAINING COMPLETED" prior to the "Effective Date" of the procedure. If no implementation period is required, check "Not applicable."

15) Effective Date: The effective date of the procedure. Both the current procedure and the new procedure are shown on the intranet "Procedure page" until the effective date of the new procedure. The effective date of the procedure should not precede completion of the required training, orientation, briefing and/or socialization necessary to fully inform all affected organizations and personnel.

16) Affected Groups/Organization: Using the block 13 information, indicate the affected groups/organizations. The minimum choices should include the organization that owns the procedure, the organizations with responsibilities in the procedure and organizations/ groups/employees impacted by the change. If no one is affected, check "Not applicable."

17A, 17B) Method of Training/Briefing: Identify the method of training that will be given to affected groups/organizations/individuals. (Major revisions to a process should require (mandate) a more stringent training method that may include documented demonstration of proficiency and/or knowledge of both the process and the changes.) (See TFC-BSM-AD-C-01, Section 4.2, step 6 and Section 4.3, step 2, that discuss the document owner's responsibility to identify the training method and implementation.) Required reading is initiated by the document owner in accordance with TFC-OPS-OPER-C-33. If no training or informal briefing method is required, check "N/A."

18) Additional Training Requirements: Intended to be used to capture training that may be non-standard, unique, hands-on, etc. It is also for the document owner to provide the reason why training is not required in support of a change. (Even a minor change can set up a situation where personnel errors can occur.) If there are no additional training requirements, check "N/A."

19) Designated Reviewing Organizations: List organizations that should review the proposed change. See TFC-BSM-AD-C-01. Identify minimum reviewers. If no reviews are necessary, check "N/A."

20) S/RID Representative/Date: Signature by S/RID IA/SME indicates completion of review. If the S/RID signature is not required (not required for minor changes and guidance documents and typically not required for plans, policies, charters, and management directives), write N/A in the block.

21) USQ: USQ evaluator checks the "USQ" block and signs and dates and enters the USQ number when a USQ screening is performed. If the change is classified as "inconsequential" as defined by TFC-ENG-SB-C-03, the USQ evaluator or individual designated by NS&L checks the "USQ-CAT-EX" block, signs and dates, and enters the USQ number. If the document is listed in RPP-27195, no USQ is required; check the "Out of Scope" block and print, sign, and date.

22) Document Owner/Date: By signing, the document owner has reviewed and agrees with the ADCA and that the decisions/choices made address the change and the training necessary.

Functional Area Manager/Date: By signing this block, the Functional Area Manager is giving approval for the new or changed procedure. (See TFC-BSM-AD-C-01, Section 3.1, for responsibilities of the functional area manager.)

Procedures/Date: Final signature by Procedures prior to issuance of procedure.

Procedures Manager/Date: Final signature by Procedures Manager prior to issuance of procedure for administrative changes only.

Ownership matrix

TABLE OF CONTENTS

1.0 PURPOSE AND SCOPE 2
2.0 IMPLEMENTATION 2
3.0 RESPONSIBILITIES 2
3.1 Procurement Services 2
3.2 Quality Assurance 2
3.3 Engineering 2
4.0 PROCEDURE 3
4.1 General Requirements 3
4.2 Developing and Processing the ECN or ECN Revision 4
4.3 Design Input 9
4.4 Field Change Notice Process 10
4.5 ECN Modification Work Complete and Restored to Original Status Process 12
4.6 Restored to Original Status 13
4.7 Document Cancellation 13
4.8 Fabrication Change Control 14
5.0 DEFINITIONS 15
6.0 RECORDS 17
7.0 SOURCES 17
7.1 Requirements 17
7.2 References 18

TABLE OF FIGURES

Figure 1. ECN Process Flowchart 20
Figure 2. FCN Process Flowchart 22

TABLE OF TABLES

Table 1. Independent Document Review/Approval 23

TABLE OF ATTACHMENTS

ATTACHMENT A – GENERAL LIST OF ENGINEERING DESIGN BASELINE AND SAFETY BASIS DOCUMENTS 24
ATTACHMENT B – DESIGN DETAILS/ATTRIBUTES REVIEW LIST 25

1.0 PURPOSE AND SCOPE

(7.1.3.a, 7.1.3.b, 7.1.3.c, 7.1.3.d, 7.1.3.e, 7.1.3.f, 7.1.6)

This procedure defines the process and responsibilities for control of changes to engineering design baseline and safety basis documentation released in the Hanford Document Control System (HDCS) using the Engineering Change Notice (ECN) form(s). Attachment A, list 1, provides a non-inclusive list of engineering design baseline documents, and list 2 provides a link to the list of safety basis documents to which this procedure applies. This procedure also provides a mechanism [a Field Change Notice (FCN)] for supporting the continuation of field work using an interim resolution rather than requiring an ECN to be prepared.

The engineering design change, whether developed by Tank Operations Contractor (TOC), Construction, or Architect-Engineer personnel, or by others, shall follow this process unless noted in a contract, Statement of Work, or work plan. This procedure is also used by construction projects personnel to document activities that perform tie-in of new construction to existing structures, systems, and components (SSCs) under the control of Operations.

This procedure does not apply to vendor information (see TFC-ENG-DESIGN-C-21) and procedures (administrative and technical). This procedure does not apply to non-design affecting documentation.

2.0 IMPLEMENTATION

This procedure is effective on the date shown in the header. The ECN form has been revised to add a block for the Process Hazard Analysis Screening number effective December 10, 2007. This revised form can be used immediately. All ECNs initiated after February 1, 2008 (ECN Block 4) shall be on the revised form.

3.0 RESPONSIBILITIES

3.1 Procurement Services

The Procurement Services organization performs purchasing activities in support of the facility or temporary modifications (for materials identified in the engineering change documentation).

3.2 Quality Assurance

The Quality Assurance organization acts in an oversight capacity by performing periodic assessments of the process and/or products.

3.3 Engineering

1. The "responsible engineer" is responsible for ensuring that all blocks of the ECN forms are filled in, that the data presented is complete and adequate, and all documents associated with the ECN follow the applicable procedure(s). This also includes ensuring the technical accuracy of the ECN, sufficient justification, completeness of design change, and identification of applicable affected documents and required changes.

2. A design verifier ensures via design reviews, alternate calculations, and/or qualification testing that the final design is correct and satisfactory.

3. A design checker performs a peer review of the product to ensure that the engineering change is adequate, complete, correct, and of good quality.

4. The "responsible manager" is responsible for the quality of the ECN. This includes confirming all blocks of the ECN forms are filled in, the data presented is logical, the justification is adequate and the ECN follows this procedure..

5. Further responsibilities are contained within Section 4.0.

4.0 PROCEDURE

4.1 General Requirements
(7.1.2)

1. Safety Basis and design baseline documents shall be changed by an ECN (see Attachment A). Changes to non-design baseline documents are made using the Document Release Form (DRF) in accordance with TFC-ENG-DESIGN-C-25.

2. Measurements contained in ECNs shall be written using English customary units. The Chief Engineer may approve the use of other units (TFC-PLN-03). (7.1.6)

3. For projects, all ECNs generated against the project drawings which have field changes associated with them shall be issued as facility modification (FM) ECNs.

4. All ECNs that impact interfaces between the facility and the project (e.g., utility tie-ins, facility and/or tank tie-ins) shall be issued as FM ECNs.

5. All revisions to FM ECNs shall be FM ECNs with the only exception being an as-built ECN, which can be a document modification type ECN.

6. When issuing Temporary Modification type ECNs that address multiple installations, each installation must be tracked with a separate ECN revision. This ensures that each installation (each revision) can be signed off when work is completed or restored to original status.

7. If the ECN documents a significant design change resulting from an incorrect design, the design process and design verification procedure shall be reviewed and modified, as necessary. (7.1.5)

8. Signature requirements for engineering change documentation are as follows:

   - Engineering personnel authorized to sign for a given position are documented in the Chief Engineer's "Engineering Signature Authority" listing on the Engineers Toolbox webpage.

   - Any person signing as "responsible engineer" shall hold a minimum "Core Engineer" or "Limited Engineer" qualification and the "responsible manager" shall hold a minimum of an "Engineering Technical Manager" qualification (or be appointed by the Chief Engineer to sign such documents).

   - The person signing as "engineering checker" or "design verifier" shall be someone other than the person signing as "responsible engineer," and shall hold a minimum "Core Engineer" or "Limited Engineer" qualification. The responsible engineer can sign as both the "responsible engineer" and "design verifier" if the

ECN is prepared and checked by an architect-engineer (design agent) under their QA program.

- If a design verification signature is required, it cannot be the preparer. The "design verifier" and "engineering checker" may be the same individual provided the individual did not supervise individuals performing the design, did not perform the original design development, did not identify a single design approach to be used in the design, or did not provide input to the design (TFC-ENG-DESIGN-P-17).

- A minimum of two engineers' signatures (responsible engineer and checker) by appropriately authorized personnel are required for approval prior to obtaining the responsible manager's signature.

- All changes (ECNs, FCNs) to drawings in a "shared" status shall be signed by both a Project Engineer and a System or Component Engineer as required by TFC-ENG-DESIGN-C-09.

- Architect-engineer and/or support contractors shall sign as "design agent" unless they are "Core Engineer" or "Limited Engineer" qualified and on the Engineering Signature Authorization List. Once qualified, they can sign as "responsible engineer," "checker," or "design verifier."

9. The impact of the design change on prior or in-process procurements shall be considered. Any impacts identified shall be addressed as part of the design change (see Section 4.2.1, Item 8).

10. Projects may track non-engineering document development outside of the Non-Engineering section of the ECN.

The steps in Sections 4.2 through 4.7 for the different forms/processes should be done in sequence to ensure technical rigor is used in the generation of the product.

4.2 Developing and Processing the ECN or ECN Revision
(7.1.2)

4.2.1 ECN Preparation

Responsible Engineer/ Originator

1. Obtain the ECN document form(s) by opening a "NEW" Microsoft Word template file (located under "General Templates," WRPS tab) (A-6003-563.1).

2. Obtain the ECN and/or ECN revision numbers from the Hanford Document Numbering System (HDNS) for non-project ECNs.

3. Obtain the ECN number from the appropriate project engineer for construction project ECNs. The Construction & Commissioning organization maintains and controls their own unique numbering system for ECNs. Each project engineer can access the project ECN number list.

4. Determine if the change is a simple modification (see Section 5.0); if not a simple modification, design inputs shall be included (ECN-1

form) in accordance with Section 4.3.

5. Prepare the ECN following the instructions included with the ECN Template. Refer to Attachment B to ensure all design details/attributes are addressed in the development of the ECN.

6. For an ECN other than a simple or document modification, consult with the appropriate engineers, Operations, and Startup & Testing personnel to ensure the change will meet tank farm needs and post-modification testing is appropriate (ref. TFC-PLN-26, section 4.0).

7. If a change impacts an external interface, process an interface change form (A-6002-985, or an equivalent form, for Waste Treatment Plant interfaces) in accordance with the interface management procedure TFC-BSM-CP_CPR-C-17. Include pertinent interface discussion in the ECN. A list of active Interface Control Documents (ICDs) can be found at WRPS ICD Team List. If unsure whether the ECN has any interface impact, contact the interface control team members listed at the link above.

8. If a change impacts a prior or in-process procurement, initiate a Nonconformance Report in accordance with TFC-ESHQ-Q_ADM-02.

9. Identify the independent reviews and approvals needed for this ECN in accordance with Table 1. In addition:

   - At least one reviewer must be knowledgeable in the technical discipline described in the ECN.

   - Rigging engineer approval is required on ECNs that involve changes to equipment that affect rigging issues.

   - ECNs that modify vital safety systems shall be approved by the system engineer with assigned responsibility for that system.

   - For ECN revisions, the independent approvers shall include, as a minimum, signatures from individuals in the organization affected by the revision. Signatures from the individuals who signed the original ECN/ECN revision and are not affected by the current change are optional.

   - When interfaces between projects or between projects and facilities are involved, the ECN or ECN revision shall be approved by the responsible project engineer(s) and facility responsible engineer, as applicable.

10. Perform a field walk-down for simple modifications (for FM and TM types), to ensure the design is accurate and correct.

11. Notify the owners (the manager of the organization) of affected non-engineering documents (e.g., e-mail, phone call) of the changes needed for their documents as a result of the engineering change.

4.2.2 ECN Review and Approval

Responsible Engineer	1.	If the ECN is prepared by the Responsible Engineer go to step 6.
Originator/Design Agent	2.	Evaluate for technical adequacy and completeness, approve, and date the ECN or ECN revision.
	3.	If the engineering check is to be performed by TOC qualified engineers rather than the Design Agent contractor personnel, go to step 8.
Checker (Design Agent)	4.	Perform an engineering check using the review list in Attachment B and sign the ECN in accordance with the ECN form instructions.
Originator/Design Agent	5.	Submit the ECN to the Responsible Engineer.
Responsible Engineer	6.	Verify the forms are completely filled out and that all required forms are included.
	7.	Verify appropriate approvers are identified on the ECN form.
Engineering Checker	8.	If an engineering check was not previously completed, perform an engineering check using the review list in Attachment B. NOTE: The engineering checker shall be knowledgeable in the technical discipline described in the ECN.
	9.	Resolve any comments with the Responsible Engineer and approve the ECN.
Responsible Engineer	10.	Conduct a design verification in accordance with TFC-ENG-DESIGN-P-17, as applicable. (7.1.1)
	11.	Attach the Design Verification Record (A-6003-808, ECN-5 form) to the ECN, as applicable.
	12.	Complete a Process Hazard Analysis (PrHA) Screening in accordance with TFC-ENG-DESIGN-C-35.
	13.	Obtain a USQ evaluation for all FM or TM type ECNs, in accordance with the requirements stated in TFC-ENG-SB-C-03. Document modification changes for safety basis documents (specified in Attachment A, List 2) do not require a USQ evaluation if the changes are being submitted to ORP as part of a safety basis amendment. (7.1.4)

Responsible Engineer	14. Evaluate for technical adequacy and completeness, print or type name on the form, as required and approve the ECN or ECN revision (include the approval date; telecon approval may be obtained). NOTE: The approval signature and date on the ECN or ECN revision by the responsible engineer and/or the responsible engineering manager indicates that the individuals accept responsibility for technical correctness and the design change package is adequate and complete. 15. Assess modification work (facility and temporary modifications) for NEPA compliance in accordance with RPP-ENV-32855, RPP-ENV-32857, and/or RPP-ENV-32858 before releasing the ECN.
Independent/Other Reviewer(s)	16. Review the ECN or ECN revision, with a specific focus on their area of expertise. GRADED APPROACH: Required independent reviewers are not required to perform a detailed review of the entire ECN or ECN revision. Required independent reviewers are expected to focus their reviews and comments on the specific parts of the package that affect their organization, or which require their special expertise. 17. Resolve comments with the Responsible Engineer.
Independent Approvers	18. Evaluate for technical adequacy and completeness, print or type name on the form, and approve the ECN or ECN revision (include the approval date; telecon approval may be obtained).
Responsible Engineering Manager	19. Evaluate for technical adequacy and completeness, print or type name on the form, as required, and approve the ECN or ECN revision (include the approval date; telecon approval may be obtained). a. Verify the package is complete and in compliance with administrative requirements. b. Verify the appropriate approvers were selected. c. Verify the appropriate reviewers were selected (e.g., responsible engineers as identified in HDCS). d. Resolve the comments with the responsible engineer. e. Accept the scope of the design change. f. Ensure the product is technically correct. NOTE: If the scope change for an ECN revision is not approved, it will be necessary to develop an acceptable alternative proposal or to process a cancel/void ECN revision.

4.2.3 ECN Release

Follow Section 4.2.4 rather than this section to pre-release an ECN off-shift when the Document Service Center (RIM) is not available and field work activities need to be accomplished.

Responsible Engineer

1. Validate the distribution list for the ECN and release the document through the Document Service Center (RIM) in accordance with TFC-ENG-DESIGN-C-25.

2. Submit electronic files that were used to develop or support the development of the ECN to the Document Service Center for storage and future retrieval.

   a. Verify the folder name includes the ECN number and revision (the folder shall contain all files associated with the ECN).

   b. Copy the electronic folder to a compact disc, a diskette, or the \\ap001\chg-doc-transfer-temp\\ share area. The folder should be provided when an ECN is released; however, the Document Service Center will accept electronic folders for ECNs that are currently released.

3. For ECNs associated with field work, provide a copy of the released ECN to the planner for incorporation into the work package in accordance with TFC-OPS-MAINT-C-01.

4.2.4 Off-Shift ECN Release

The following process is to be used in lieu of Section 4.2.3 to pre-release an ECN off-shift when the Document Service Center (RIM) is not available and field work activities need to be accomplished.

Responsible Engineer

1. Follow the normal ECN development, review and approval process as prescribed in Sections 4.2.1 and 4.2.2, as applicable.

2. If HDNS is not available at the time the pre-released ECN is needed, obtain the number and enter it on the ECN form(s) prior to releasing the final ECN through the Document Service Center (RIM).

3. Sign and date the Release Stamp block on Page 1 of the ECN with the following: "Pre-released by 'Name,' 'Date,' 'Time.'"

4. Provide a copy of the pre-released ECN to the planner for incorporation into the work package in accordance with TFC-OPS-MAINT-C-01.

5. Validate the distribution list for the ECN and provide the approved document to Document Service Center (RIM) for release on the first work day following the pre-release activity.

6. If pre-released without an ECN number, provide the ECN number once obtained to those parties that have used the ECN (e.g., field work supervisor).

7. Submit electronic files that were used to develop or support the development of the ECN to the Document Service Center for storage and future retrieval.

   a. Verify the folder name includes the ECN number and revision (the folder shall contain all files associated with the ECN).

   b. Copy the electronic folder to a compact disc, a diskette, or the \\ap001\chg-doc-transfer-temp\\ share area. The folder should be provided when an ECN is released.

4.3 Design Input

Responsible Engineer

1. Obtain the ECN-1 document form by opening a "NEW" Microsoft Word template file (located under "General Templates," WRPS tab) (A-6003-567.1).

2. For an FM or TM change and project interface activities, perform a walkdown of the system, equipment, and facilities that will be affected by this ECN to verify that drawings correctly depict the current configuration.

3. If the walkdown identifies discrepancies between drawings and the actual field configuration, initiate a PER (TFC-ESHQ-Q_C-C-01) to document and resolve the discrepancy.

   NOTE: The discrepancy must be resolved before the ECN development can be finalized.

4. Identify design input and/or design analysis documents and record on the ECN-1 form. Insert N/A for those types of documents that don't apply to the change.

   a. Identify the design inputs that address the applicable functional, performance, interface (e.g., tie-in activities), qualification, and regulatory requirements for the change.

   b. In addition to the technical performance requirements, consider ALARA issues, human factors considerations, environmental requirements, natural phenomenon hazards, chemical hazard issues, etc. when developing design inputs.

   c. Identify the analyses/calculations that support the design development.

   GRADED APPROACH: The rigor of analyses and the detail of the documentation should be commensurate with the complexity of the modification.

5. Identify any special references not identified in step 4 and pertinent information regarding design inputs that is specific to the engineering change.

4.4 Field Change Notice Process

The Field Change Notice Process is used to provide an interim resolution to a field modification installation issue, or an unsatisfactory field condition that is encountered while performing maintenance or normal operating activities. The process allows field work to continue, minimizing schedule impact. There are two types of Field Change Notices (FCN); an ECN/Project FCN and an Operations/Maintenance (Ops/Maint) FCN. See Section 5 for a definition of these FCN types.

The OPS/Maint type FCN is **NOT** to be used for facility or temporary modification activities that could affect equipment/component/system functions. The OPS/Maint type FCN is **NOT** to be used to add any additional equipment to the permanent tank farm facilities or scope to the existing design.

Engineer/Field Work Supervisor	1.	Identify field conditions that meet the definition for use of an FCN to provide an interim solution.
	2.	Obtain the ECN-2 document form by opening a "NEW" Microsoft Word template file (located under "General Templates," WRPS tab) (A-6003-573.1).
	3.	Complete preliminary documentation of the problem encountered on the ECN-2 form. Include, as applicable, the associated work package number, associated ECN number and affected drawing numbers, including sheet and revision.
Responsible Engineer	4.	Obtain an FCN number from the HDNS. Use this number on the FCN form. On back-shift or when out in the tank farm facility, obtain the FCN number when HDNS is available or upon returning to the office. NOTE: Where the FCN is used to modify an existing ECN, the ECN number shall be identified in the description block of the ECN-2 form.
	5.	Provide the FCN number to the field work supervisor once obtained from HDNS for incorporation into the work document, if not already noted on the paperwork.
Responsible Engineer/ Field Work Supervisor	6.	Identify and document the interim resolution. Include sketches, installation instructions and testing requirements as needed. NOTE: If calculations are required, they do not need to be finalized and approved to issue the FCN, but there should be a high level of confidence in their accuracy; for example, an independent review by another engineer for reasonableness of approach and results.
Preparer	7.	Approve (print, sign, and date) the FCN.

Responsible Engineer

8. For ECN/Project issues, identify if the interim resolution impacts the scope of the approved ECN, project drawing, or document.

   a. If YES, the FCN process cannot be used. Process an ECN in accordance with section 4.2 to resolve the issue.

   b. If YES, notify the field personnel that work will be suspended while a resolution is developed.

9. Obtain a USQ for all Ops/Maint FCNs in accordance with the requirements stated in TFC-ENG-SB-C-03.

10. Approve (print, sign, and date) the FCN.

11. Provide the FCN to the Document Service Center. If performing work outside of normal work hours, provide the FCN to the Document Service Center on the next normal work day.

    The Document Service Center will retain the original FCN and provide the engineer with a copy of the stamped FCN (to be attached to the incorporating ECN).

12. Provide a copy of the stamped FCN to the field work supervisor, the planner, and the appropriate engineering manager within one working day of the approval of the FCN.

Responsible Engineering Manager

13. Assign a responsible engineer to provide a daily listing of FCNs that have been issued.

Responsible Engineer

14. Provide daily listings of issued FCNs to the Responsible Engineering Manager.

Responsible Engineering Manager

15. Review daily FCN listings to ensure ECN and project work activities are not creating safety issues for the operating facilities/systems.

Responsible Engineer

16. Prepare (or revise as applicable) an ECN that incorporates or addresses all of the applicable FCN numbers obtained from HDNS (whether issued to the field or not).

    - Changes to the design as shown on the FCN (should the permanent resolution differ from the interim resolution) subsequent to the approval of the FCN and the FCN being provided to the Document Service Center shall be documented and described within the ECN.

    - OPS/Maint FCN(s) shall be released in a new ECN within five working days of approving the FCN, or within 5 working days of completion of a scheduled outage, to document the changes in the appropriate facility drawing(s).

    - The ECN/Project type FCN must be finalized in an ECN revision to the associated original ECN or a new project ECN (for project work), prior to signing the installation

documentation as work complete.

17. If the ECN for OPS/Maint FCNs cannot be prepared and released within five working days, obtain the System Engineering manager's approval to extend the time period for an additional five working day period (ten working days).

4.5 ECN Modification Work Complete and Restored to Original Status Process (7.1.2)

4.5.1 Modification Work Complete

The following process applies to FM and TM ECNs only. Individual ECN revisions may be signed Modification Work Complete when their associated field work is complete. A Modification Work Complete ECN or ECN revision cannot be revised.

Responsible Engineer

1. Ensure that the work activities prescribed in the ECN have been completed, as follows:

   - The field installation matches the design media (e.g., field walkdowns, photos, videos, review of craft logs and/or statements). For modifications to Waste Transfer Confinement Configurations, a field walk-down shall be performed to verify visible portions of confinement systems are installed as designed.(7.1.7) (Waste Transfer Confinement Systems as defined in TFC-ENG-STD-03, Waste Transfer Confinement Configuration.)

   - For facility modification work that is not part of a project and not controlled through the Operational Readiness or Readiness Verification processes, and which was determined to require a PrHA in accordance with TFC-ENG-DESIGN-C-35, verify that a PrHA was conducted as required and that all pre-start actions have been resolved prior to signing the ECN as modification work complete.

   - The acceptance testing has been successfully completed

   - The pertinent procedures identified on page 2 of the ECN have been modified, and

   - All applicable FCNs have been incorporated by a released ECN revision.

2. Validate the correct work package number is identified on the ECN or ECN revision (revise, initial and date, as applicable).

3. Approve (print/sign) and date the Modification Work Complete signature block on the ECN or ECN revision.

   NOTE: Work completion of ECNs that revise other ECNs shall be done when the task (total work scope) has been completed (all ECNs signed and issued together).

4. Provide work completed ECNs (Pages 1 and 2) to the Document Service Center (RIM) within one normal work day following the day the document was signed work completed, for formal release into the documentation system.

5. Provide a copy of the released work complete ECN or ECN revision to Operations for incorporation into the work package in accordance with TFC-OPS-MAINT-C-01.

4.6 Restored to Original Status

The following process applies to TM ECNs only.

Responsible Engineer

1. Verify that field work activities have been completed, as follows:
   - The field configuration matches the original design media
   - Any applicable acceptance testing has been successfully completed
   - The facility modification has been removed, and
   - All applicable FCNs have been incorporated into a released ECN revision.
2. Approve (print/sign) and date the Restored to Original Status signature block on the temporary ECN or ECN revision,
3. Validate the correct work package number is identified on the ECN or ECN revision (revise, as applicable) and provide the restored to original status document to Document Service Center (RIM) for release within one normal work day following the day the document was signed.
4. Provide a copy of the released restored to original status ECN or ECN revision to Operations for incorporation into the work package in accordance with TFC-OPS-MAINT-C-01.

4.7 Document Cancellation

This process is applicable to cancellation of design affecting documents (see Attachment A, lists 1 and 2). The cancellation of a document does not require a USQ and does not require an ECN number unless the document is listed in Attachment A, List 2.

Responsible Engineer

1. Obtain the ECN-3 cancellation form by opening a "NEW" Microsoft Word file (located under "General Templates," WRPS tab) (A-6003-722.1).
2. Enter the required information on the ECN-3 form.
3. If, a problem or issue is encountered during the generation of the cancellation form, discuss the problem/issue with management and, if appropriate, document the problem using the PER process

(TFC-ESHQ-Q_C-C-01).

4. Identify appropriate independent approvers for the document on the document cancellation form in accordance with Table 1 (type or print names). Additional reviewers can be identified at the discretion of the responsible engineer or responsible engineering manager.

5. Identify a distribution list for this document on the document cancellation form.

6. Approve (print/sign) and date the document cancellation form.

Independent Approvers

7. Evaluate for acceptability to cancel, approve (print/sign) and date the document cancellation form after resolving any comments with the responsible engineer (telecon approval may be obtained).

Reviewers (Optional)

8. Review the cancellation form for accuracy and completeness and approve (print/sign) and date the form after resolving any comments with the responsible engineer.

Responsible Engineering Manager

9. Approve the document cancellation after resolving any comments with the responsible engineer.

Responsible Engineer

10. Provide the document cancellation form to the Document Service Center (RIM) for release/issuance.

4.8 Fabrication Change Control

The fabrication change control process applies only to WRPS work on structures systems and components (either new equipment or equipment removed from service) being performed within designated fabrication areas separate from the tank farms operating and maintenance facilities. Fabrication change is an administrative control method and applies only to design information.

Responsible Engineer

1. Specify the required fabricator change control process, as applicable, in the statement of work or material requisition for fabrication services. This can be either a fabrication change control process (e.g., redline process) that is established and controlled by the fabricator, or the WRPS process prescribed in the following steps.

2. If the fabricator's change control process is to be used in lieu of the WRPS process, review and approve the fabricator's change control process. The fabricator's process (e.g., redline process) shall address, as a minimum:

   - WRPS engineering approval of each change prior to commencement of work
   - Status recording of each change
   - Issuance of a final ECN by WRPS before the equipment is removed from the fabrication area and field installation begins.

Responsible

3. When a change to design documentation is required during the

Engineer/Preparer

fabrication process, mark up the design media (using RED ink) included in the work instruction to address the change. Initial, date, and number each fabrication change consecutively on the affected design media.

4. Ensure the change(s) comply with applicable design criteria.

5. Obtain the ECN-4 form (Fabrication Change Log) by opening a "NEW" word file (located under "General Templates," WRPS tab) (A-6003-723.1).

6. Enter the required information for each consecutive change on the Fabrication Change Log.

   NOTE: The scope of each change should be kept small enough to be described with a discrete entry in the Fabrication Change Log.

Responsible Engineer

7. Initial and date the Fabrication Change Log when each entry is made and place it in the applicable work instruction.

Preparer

8. If off-shift approval of a change is needed and the Responsible Engineer is not available, fabrication change approval may be obtained by telecon.

9. For telecon approvals, enter the following information on the Fabrication Change Log: "Change authorized by telecon," the name of authorizing responsible engineer, and the name of the person who received the authorization.

Responsible Engineer

10. For telecon approvals, initial and date the "per telecon" entry in the Fabrication Change Log during the next normal work shift, or as soon as practicable.

11. Prepare and release a final ECN that reflects the final configuration of the fabricated SSC, incorporating all fabrication changes listed in the Fabrication Change Log, or under the fabricator's change control process.

    NOTE: The final ECN(s) must be released before the equipment is removed from the fabrication area and field installation begins.

12. Provide a copy of the released ECN to the planner (Project Integration) for incorporation into the work package in accordance with the work control procedure, TFC-OPS-MAINT-C-01.

13. Complete the "Incorp/Date" column on the Fabrication Change Log showing that each affected entry is accounted for on a released ECN.

    NOTE: The Fabrication Change Log, and all design information mark ups shall be maintained within the work package for archival.

5.0 DEFINITIONS

Design approach. The details of an engineered design.

NOTE: Manufacturer names and part numbers do not directly provide design information and are not considered to be part of the design approach. The drawings or specifications associated with manufacturer part numbers specify the design approach. The ratings associated with a pump (e.g., flow and discharge pressure) and the general layout of piping are the type of information that is considered to be part of the design approach.

Design change. A change to the design concept and/or the design approach. A change to a design document, such as a drawing, does not necessarily constitute a design change (e.g., the correction of an obvious typographical error or the removal of manufacturer information from a drawing, would not be design changes).

Desired design input. An input that is not required, but one that is generally utilized in industry to aide in the development of an engineered solution.

Direct revision ECN. An ECN that summarizes the change description and authorizes the engineering document(s)/drawing(s) revision. The attached revised engineering document(s)/drawing(s) provide the details for the change and are issued at the same time the ECN is processed for release. Direct revision individual page changes are allowed.

Document modification. A change to a document or drawing under Tank Operations Contactor (TOC) control that has no facility SSC changes associated with the change.

Engineering Change Notice (ECN). An engineering change control document used to provide changes to engineering drawings, documents, and other design media.

Engineering Change Notice revision. A revision, with a unique numerical identifier, to a previously released ECN or prior ECN revision. ECN revisions can be used to issue the parts of a change assigned to a specific discipline of the field work (e.g., mechanical, electrical, etc.) or to issue discrete parts of a change that can be designed and implemented in phases (e.g., same changes to equipment at multiple locations). In addition, ECN revisions can provide the mechanism for incorporating changes into the original design documents.

Engineering rework. A change that is required to correct a technical error in the original design.

Facility modification. A change to a document or drawing under the Tank Operations Contractor control that has facility SSC changes associated with the design media change.

Field Change Notice. A process used to provide an interim resolution to a field modification installation issue, or an unsatisfactory field condition that is encountered while performing maintenance or normal operating activities. The process allows field work to continue, minimizing schedule impact. There are two types of Field Change Notices (FCN); an ECN/Project FCN and an Operations/Maintenance (Ops/Maint) FCN.

> ECN/Project FCN is a document that is issued to resolve a problem that develops during field implementation of an ECN, ECN revision, or project drawing (which includes minor modifications). An ECN/Project type FCN provides the interim design information, reviews, and approvals necessary to support continuation of the field work while more complete design change documentation is developed.
>
> OPS/Maint FCN is in response to a field condition that requires physical attribute (form and fit) changes. An OPS/Maint type FCN is to resolve an unsatisfactory field condition

that is encountered while performing corrective maintenance, preventive maintenance or normal operating activities.

Revision ECN. The type of ECN that changes a portion of the original ECN or any prior ECN revision(s).

Simple modification. A change that does not impact the safety function of any safety significant Structures, Systems or Component's (SSC) or any DSA identified design features. All changes to General Service SSCs are simple modifications.

Supercedure ECN. A change to an issued ECN (not work completed) that supersedes the engineering change (e.g., ECN) and/or ECN revision(s) in its entirety

Supplemental ECN. An ECN that is used in addition to the affected engineering document(s)/ drawing(s) and delineates the change details. The current engineering document(s)/drawing(s), plus the Supplemental ECNs, represent the total engineering document(s)/drawing(s). Supplemental ECNs are incorporated into the affected engineering document(s)/drawing(s) by subsequent revision. Supplemental ECNs can be issued as an original supplemental ECN (revision 0) or as an ECN revision.

Temporary modification. Temporary minor alterations made to structures, systems, or components that do not conform to approved design configuration and change the design function. The alterations are temporary in that they generally are expected to be installed for a short time period (see TFC-OPS-OPER-C-11).

Void/Cancel ECN. An ECN that voids/cancels a non work-completed engineering change (e.g., ECN, ECN revision), a drawing, or a document.

6.0 RECORDS

The following records are generated during the performance of this procedure:

Record Description	Vital Record Y/N	QA Record Y/N	QA Record Retention L/NP	NARA Retention Schedule	Other Retention Requirements	Records Custodian
Engineering Change Notice	Y	Y	L	ADM-17.32a	N/A	IRM Service Provider
Field Change Notice	Y	Y	L	ADM-17.32a	N/A	IRM Service Provider

The identified record custodian is responsible for record retention in accordance with TFC-BSM-IRM_DC-C-02.

7.0 SOURCES

7.1 Requirements

1. 10 CFR 851, "10 CFR 851, "Worker Safety and Health Program," Section 6(c)."
2. DOE O 5480.19, "Conduct of Operations Requirements for DOE Facilities," Chapter VIII, Section 6.9.
3. DOE-STD-1073-2003, "DOE Standard Configuration Management."
   a. Section 2.3, "Configuration Management Interfaces."

b. Section 3.3, "Identifying and Documenting Design Requirements."
c. Section 3.10, "Grading."
d. Section 3.11, "Managing Design Change and Safety Bases Under Configuration Management."
e. Section 5, "Change Control."
f. Section 6, "Document Control."

4. External Letters from DOE-ORP.
   a. DOE-ORP: 03-TED-109, "Contract No. DE-AC27-99RL14047 – Approval of the Revised Documented Safety Analysis (DSA), Technical Safety Requirements (TSR), and Supporting Documents for Tank Farms Safety Basis for Implementation."
   b. DOE-ORP: 03-TED-111, "Contract No. DE-AC27-99RL14047 – Approval of the Tank Farms Safety Basis (SB) Amendment-001."
   c. DOE-ORP: 04-TED-058, "Contract No. DE-AC27-99RL14047 – Closure of the Justification for Continued Operation for Single-Shell Tank 241-C-106 Oxalic Acid Dissolution Waste Retrieval System, CH2M-0302318.3, dated June 25, 2004."

5. TFC-PLN-02, "Quality Assurance Program Description."

6. TFC-PLN-03, "Engineering Program Management Plan."

7. PER-2007-1327.19 - JON 4.4 - Establish an Engineering Standard on confinement for all tank farm designs.

7.2 References

1. RPP-16922, "Environmental Specification Requirements."

2. RPP-ENV-32855, "National Environmental Policy Act (NEPA) Checklist."

3. RPP-ENV-32857, "Washington State Environmental Policy Act (SEPA) Checklist."

4. RPP-ENV-32858, "Cultural/Ecological Review Checklist."

5. TFC-BSM-CP_CPR-C-17, "Interface Management."

6. TFC-BSM-IRM_DC-C-02, "Records Management."

7. TFC-ENG-DESIGN-C-09, "Engineering Drawings."

8. TFC-ENG-DESIGN-C-21, "Vendor Information."

9. TFC-ENG-DESIGN-C-25, "Technical Document Control."

10. TFC-ENG-DESIGN-C-35, "Process Hazard Analysis."

11. TFC-ENG-DESIGN-P-17, "Design Verification."

12. TFC-ENG-SB-C-01, "Safety Basis Issuance and Maintenance."

13. TFC-ENG-SB-C-03, "Unreviewed Safety Question Process."

14. TFC-ENG-SB-C-08, "Tank Operations Contractor Safety Basis Document List."

15. TFC-ESHQ-Q_C-C-01, "Problem Evaluation Request."

16. TFC-ESHQ-Q_ADM-02, Nonconforming Item Reporting and Control."

17. TFC-OPS-MAINT-C-01, "Tank Operations Contractor Work Control."

18. TFC-OPS-OPER-C-11, "Equipment Temporary Modifications and Bypasses."

19. TFC-PLN-13, "Fire Protection Program."

20. TFC-PLN-26, "Testing Program Plan."

21. TFC-PLN-43, "Tank Operations Contractor Health and Safety Plan."

22. TFC-PLN-48, "ALARA Program Plan."

23. TFC-PLN-55, "Industrial Hygiene Safety Management Program."

24. TFC-PLN-58, "Chemical Management Plan."

25. TFC-PLN-73, "Environmental Program Description."

26. TFC-ENG-STD-03, "Waste Transfer Confinement Configuration."

Figure 1. ECN Process Flowchart.

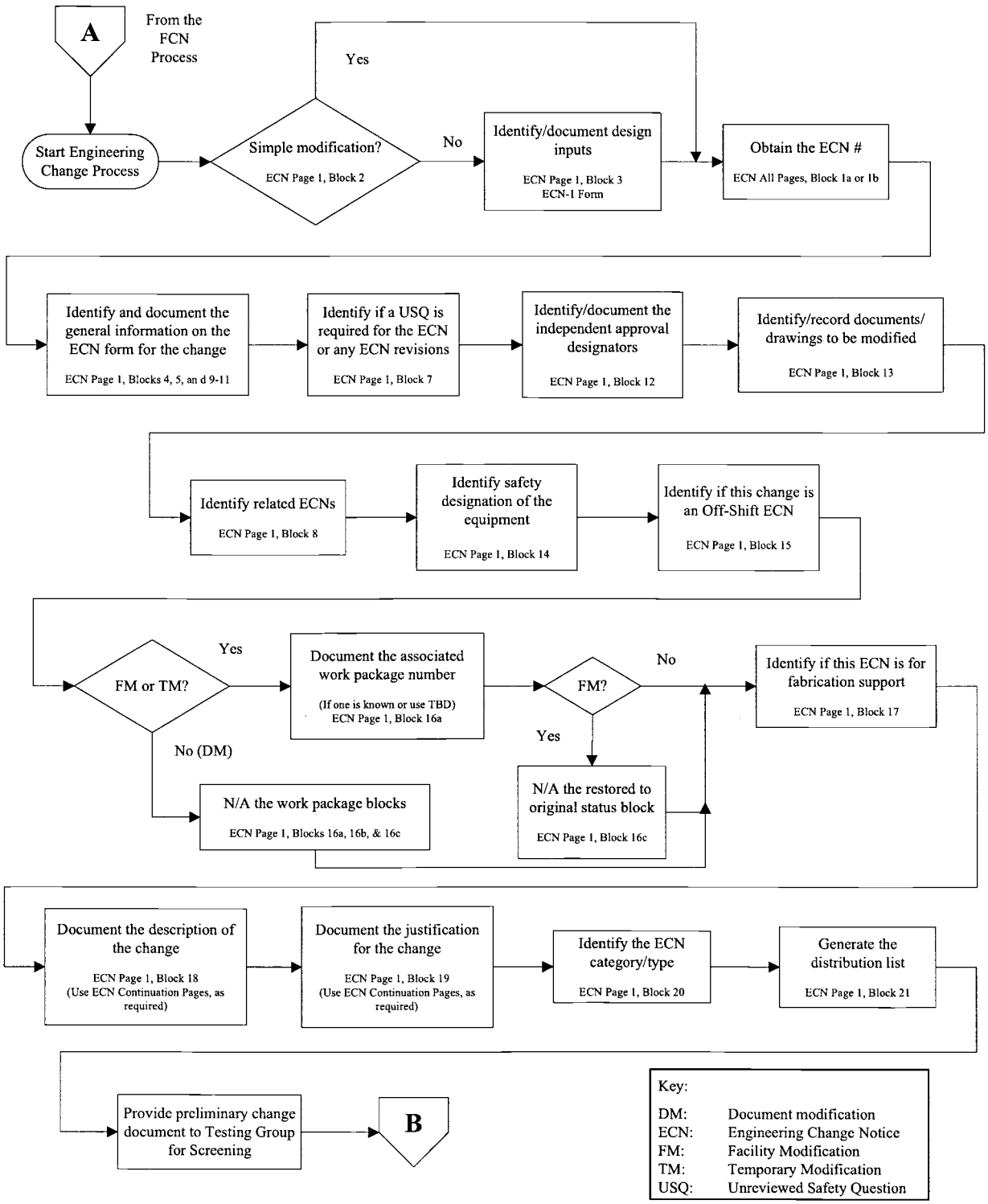

Figure 1. ECN Process Flowchart. (cont.)

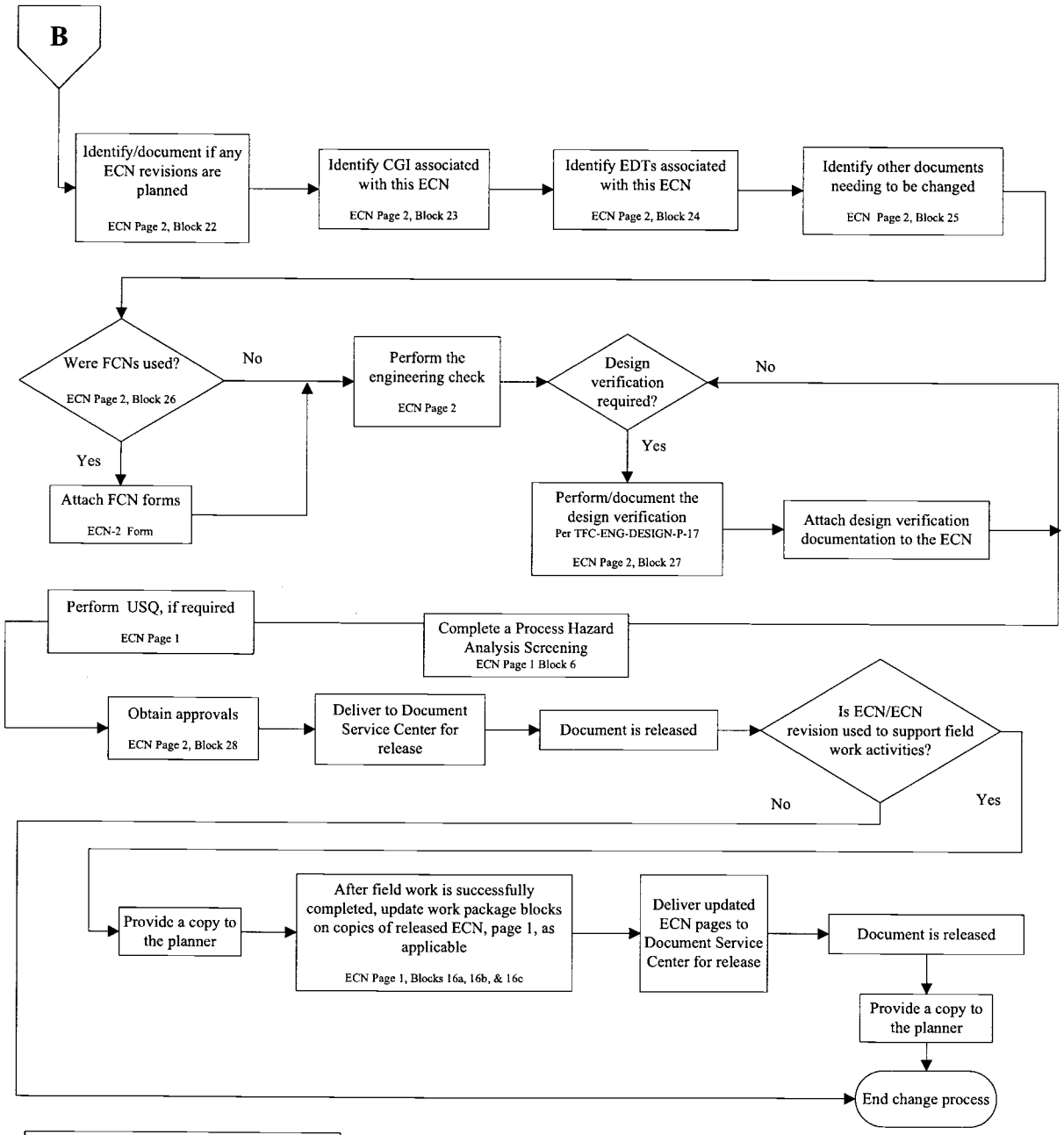

Key:

CGI:	Commercial grade item
ECN:	Engineering Change Notice
EDT:	Engineering Data Transmittal
FCN:	Field Change Notice

Figure 2. FCN Process Flowchart.

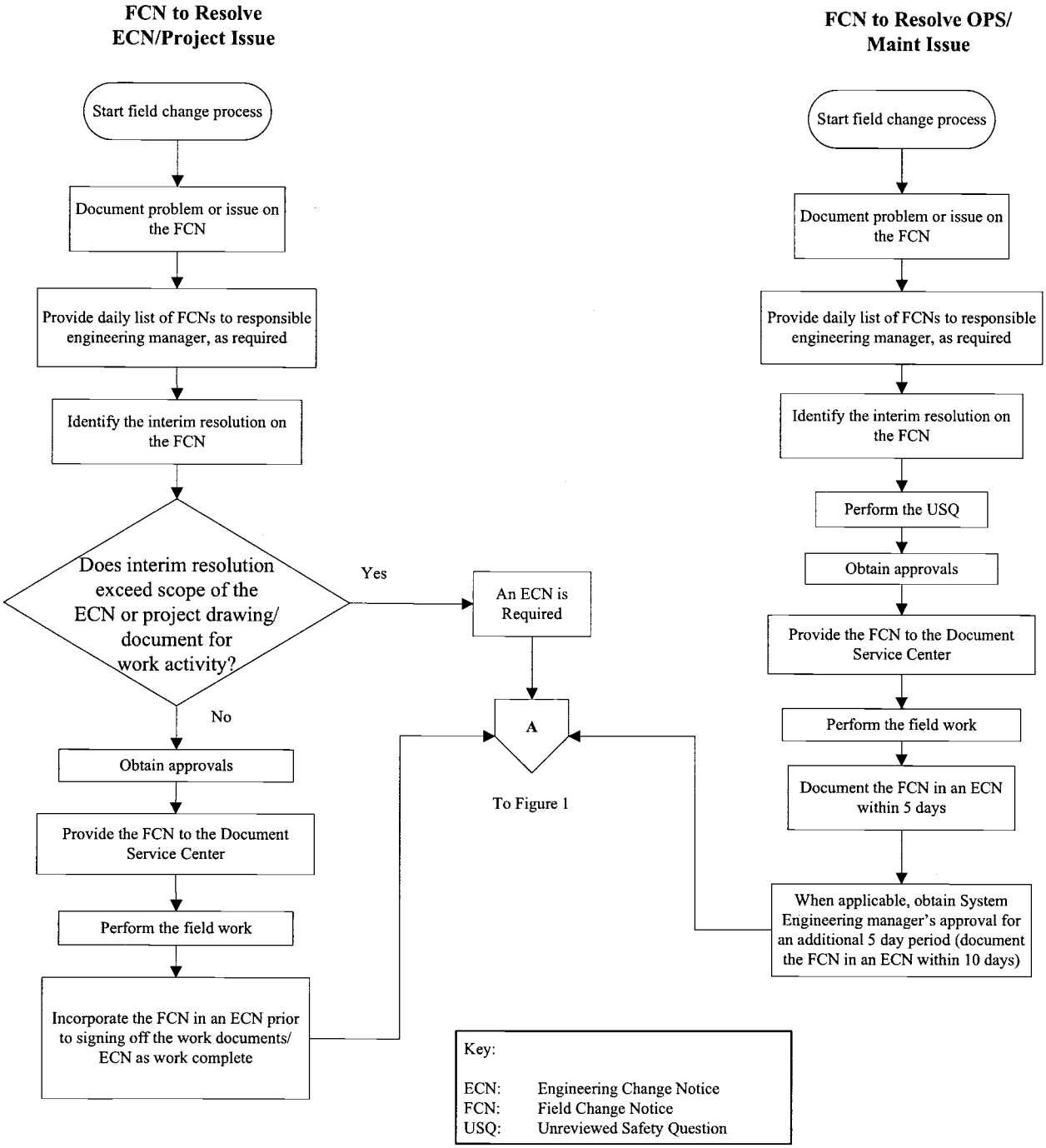

Table 1. Independent Document Review/Approval.

1.	All design documents requiring DOE or other regulatory agency approval and establishing:	
	a. Environmental protection including permits, regulations, and requirements.	E (Approval)
	b. Industrial safety (& fire protection) requirements.	S (Approval)
	c. Radiological monitoring requirements.	R (Approval)
	d. Chemical Management Program requirements	C (Approval)
2.	Documentation that establishes or modifies the following functional criteria or requirements of safety class (SC) or safety significant (SS) structures, systems, or components (SSCs):	
	a. Environmental protection, including environmental and requirements bases of the Environmental Management System and Environmental Specification Requirements.	E (Review)
	b. Radiological control or monitoring.	R (Review)
	c. Industrial Safety (& fire protection).	S (Review)
3.	Documentation that establishes or modifies the following functional criteria or requirements for General Services (GS) SSCs:	
	a. Environmental protection, including environmental and requirements bases of the Environmental Management System and Environmental Specification Requirements.	E (Review)
	b. Industrial Safety (& fire protection).	S (Review)
	c. Chemical Management Program	C (Review)
4.	Safety Basis Documentation requiring DOE/ORP approval	D (Approval)

Key for Designated Approval Organizations:

C = **Environmental Health organization** (Ref. TFC-PLN-58, "Chemical Management Plan")
D = **United States Department of Energy, Office of River Protection** (Ref. TFC-ENG-SB-C-01, "Safety Basis Issuance and Maintenance")
E = **Environmental Strategies and Program organization** (Ref. TFC-PLN-73, "Environmental Program Description" and RPP-16922, "Environmental Specification Requirements")
R = **Radiological Control organization** (Ref. TFC-PLN-48, "ALARA Program Plan")
S = **Industrial Safety organization** (Ref. TFC-PLN-43, "Tank Operations Contractor Health and Safety Plan;" TFC-PLN-13, "Fire Protection Program;" and TFC-PLN-55, "Industrial Hygiene Safety Management Program")

ATTACHMENT A – GENERAL LIST OF ENGINEERING DESIGN BASELINE AND SAFETY BASIS DOCUMENTS

Other documents not in the list below that impact the design baseline or the safety basis must also be changed using the ECN. Documents that do not impact the design baseline or the safety basis can be changed via the Document Release Form in accordance with TFC-ENG-DESIGN-C-25.

List 1 – Engineering Design Baseline Documents to be changed via an ECN

ACCEPTANCE TEST PROCEDURE
ACCEPTANCE TEST REPORT
AUDITABLE SAFETY ASSESSMENT
AUDITABLE SAFETY ANALYSIS REPORT
AUTHORIZATION AGREEMENT
CALCULATIONS
CALCULATION NOTES
CRITICALITY SAFETY EVALUATION REPORT
DESIGN ANALYSIS
DESIGN REQUIREMENTS
DETAILED DESIGN REPORT
DRAWINGS
ENVIRONMENTAL - PERMIT DOCUMENTS
FINAL SAFETY ANALYSIS REPORT
FIRE HAZARDS ANALYSIS ASSESSMENT
FUNCTIONAL DESIGN CRITERIA
FUNCTIONAL REQUIREMENTS
FUNCTIONS AND REQUIREMENTS DOCS (TPA)
HAZARDS ANALYSIS
HAZARD BASELINE DOCUMENT
HAZARD CATEGORIZATION REPORT
INTERFACE CONTROL DOCUMENTS
OPERABILITY PROCEDURE/REPORT
OPERATING SPECIFICATION DOCUMENT
OPERATION AND MAINTENANCE MANUAL
OPERATIONAL READINESS REVIEW
OPERATIONAL TEST PROCEDURE
OPERATIONAL TEST REPORT
PRE-OPERATIONAL TEST PROCEDURES
PRE-OPERATIONAL TEST REPORT
PROCESS CONTROL PLAN
READINESS ASSESSMENT
READINESS REVIEW
SAFETY ANALYSIS REPORT
SAFETY BASIS CRITERIA DOCUMENT
SAFETY MANAGEMENT PROGRAMS
SEISMIC ANALYSIS
SETPOINT CONTROL DOCUMENT
SOFTWARE REQUIREMENTS SPECIFICATION
SOFTWARE VALIDATION AND VERIFICATION
SPECIFICATION, CONSTRUCTION
SPECIFICATION, DESIGN
SPECIFICATION, PROCUREMENT
STANDARD ELECTRONIC FORMAT
SYSTEM DESIGN DESCRIPTION
TANK WASTE RETRIEVAL WORK PLAN (TPA)
TECHNICAL DATA PACKAGE
TECHNICAL SAFETY REQUIREMENTS
WASTE ACCEPTANCE CRITERIA

List 2 - Safety Basis Documents to be changed via an ECN

See TFC-ENG-SB-C-08, "Tank Operations Contractor Safety Basis Document List."

ATTACHMENT B – DESIGN DETAILS/ATTRIBUTES REVIEW LIST

Design Details/Attributes	Design Details/Attributes
Issue/problem statement included	Potential component/system impacts identified and resolved
Safety/commitment/programmatic impacts identified - NEPA documentation completed	Potential software impacts identified and resolved
System/equipment/personnel impacts identified	Potential safety impacts are identified and resolved (e.g., energized electrical equipment)
Technical evaluation included	Modification is constructible and can be implemented
Compliance w/design requirements identified	Design considers operational impacts
Assumptions/sources clearly identified	Contamination controls are planned
Affected documents and databases clearly identified	Pre-installation/mockup/prototype testing planned
Inputs verified	Sketches/drawings for tools/fabricated components included
Required function(s)/changes clearly identified	Hardware design described
Safety Basis/commitments/concerns evaluated	Software/firmware design described
Application of industry standards/codes explained	Inspections (per codes & standards)
Proper analytical techniques employed	Dimensions and tolerances included
Interfaces evaluated and identified	Sketches/drawings for installation included
Material/component compatibility evaluated, including the physical, chemical, radiological environment, and flammable gas/ignition source controls.	Housekeeping/personnel safety requirements identified
ALARA/radiological controls/industrial hygiene/industrial safety/chemical hazards/vapor exposures to workers evaluated	Walkdown(s) performed/labeling correct
Human/machine interface evaluated	Acceptance test generated and acceptance criteria included
Program impacts evaluated	M&TE requirements identified
Calculations updated	Training/qualification of test personnel identified
Alternatives described/evaluated and address resolution of problem	Safety and hazards analysis assessed
Impacts on maintenance and OPS described	Quality checks included
Preventive maintenance changes identified	Potential component/system impacts identified and resolved

ATTACHMENT B – DESIGN DETAILS/ATTRIBUTES REVIEW LIST (cont.)

Criticality safety issues assessed	Impacts to potential waste leak paths and barriers identified, evaluated and resolved
Basis for selected alternative explained, including assumptions	Potential impacts to the process control plan and process hazard analyses identified, evaluated and resolved for all equipment or activities that disturb or transfer waste, including the technical basis
Impacts to approved Operability/Technical Evaluations are identified, evaluated, and resolved	Impacts on training or training required that may be non-standard, unique, hands-on, etc.
Impacts to prior or in-process procurements are identified, evaluated and resolved	

Actionee: Faust, Gary L

Action Due Date: 03/15/2009

ESTARS Num: WRPS-PER-2008-0137.3

Action:

Issue a required reading to qualified system engineers, engineering managers, and quality assurance engineers regarding changes to TFC-ENG-DESIGN-C-06 addressing impacts to procurements.

Deliverable: Copy of required reading and evidence of 100% completion.

Required Reading List Report: (Documents Read By User)

Doc ID	Doc Name	Document Number
Group Name		
3107	TFC-ENG-DESIGN-C-06, Rev G-5	RR-09-004

114 Engineering Technical Staff 03/16/2009

Shultz, Milton V (0002367)
Haq, Mian A (0004610)
Sandgren, Kevin R (0011518)
Bragg, David A (0013790)
Nelson, Eric A (0015138)
Kripps, Larry J (0016744)
Mendoza, Ruben E (0017552)
Carpenter, Greg (0021492)
Field, Jim G (0022161)
Nicholson, Robert s (Bob) (0022499)
Winkelman, Wayne D (0023128)
Everett, Brian K (0024690)
Nguyen, Toan H (0024953)
Parkman, David B (0028449)
Place, David E (0029031)
Bryden, Michael J (0031302)
Ewer, Kenneth L (0033528)
Braun, David J (0036652)
Grigsby, J Mike (0037499)
Tardiff, Gary R (0039579)
Robinson, Randall S (0046024)
Krogsrud, Steve (0046799)
Landon, Matt (0048481)
Erhart, Michael F (0050013)
Leonard, Michael W (0050243)
Harty, William M (0052124)
Allen, Gail K (0055232)
Brey, Steve L (0062556)
Appel, John N (0065074)
Powell, Bill (0068770)
Kirkbride, Randy A (0069915)
Farris, Troy R (0071648)
Brown, Todd M (0071988)
Carothers, Kelly G (0072896)
Barton, Blaine (0074522)
Barnes, David A (0077446)
Lucas, Dan (0080443)
Meacham, Joseph E (0081064)
Hull, Kevin J (0083401)
Baide, Dan (0004403)
Bauer, Roger E (0005830)
Mackey, Tom (0012336)
Zimmerman, Bruce D (0014948)
Harris, John P (0016436)
Gerken, Doug (0017502)
Nelson, Rick E (0018989)
Colosi, Kris (0021934)
Jo, Jaiduk (0022478)
Shuford, Dave (0022934)
Smet, David B (0024460)
Ruelas, Byron H (0024711)
Faust, Gary L (0027818)
Conner, John M (0028870)
Washenfelder, Dennis J (0029049)
Gauck, Gregory J (0031592)
Cockrell, Andy (0034677)
Brown, Mark H (0037236)
Kirch, Nick (0038450)
Certa, Paul J (0041296)
Boomer, Kayle D (0046193)
Heimberger, Darrell T (0047828)
Call, Lynn J (0049641)
Blaak, Todd M (0050198)
Nguyen, Duc M (0051515)
Bellomy, Jim (0053979)
Bailey, John W (0062053)
Sasaki, Leela M (0064981)
Rasmussen, Juergen H (0068401)
Fish, Michael A (0068997)
Smith, Ryan D (0071475)
Coleman, George J (0071950)
Eberlein, Susan J (0072708)
Laney, Terance (Terry) (0074096)
Parsons, Greg (0075614)
Heubach, Ed (0078303)
Banning, Dave (0081005)
Yeh, Timothy P (0082033)
Holm, Melissa J (0083985)

Dale, Rob (0086651)
Sutey, Mike (0089892)
Templeton, Andrew M (0091402)
O'Toole, Steve (0095048)
Higuera, Maurice J (0101630)
Bryan, Wes (0164610)
Goetz, Tom (0309350)
Stam, Erik C (0904262)
Bewick, Joe (1420637)
Rodgers, Matt J (4918479)
Kozlowski, Stephen D (6207615)
Comstock, David C (6567738)
Lytle, Randy L (8323180)
Stickney, Randall G (0088459)
Bingham, James D (0091248)
Hamm, Earnest R (0092509)
May, Tom (0095233)
Boettger, Jeff (0107230)
Roberts, Mark A (0290486)
Johnson, Adlai C (0449800)
Engeman, Jason K (1190823)
Quintana, Michael S (3069769)
Houghton, David J (5985290)
Nguyen, Viet (6407450)
Cato, Diane M (7947708)

Required Reading List Report: (Documents Not-Read Grouped by document)

Doc ID	Doc Name	Document Number
Group Name		
3107	TFC-ENG-DESIGN-C-06, Rev G-5	RR-09-004
114 Engineering Technical Staff		03/16/2009
	Knight, Mark A (0059226)	

Mark Knight has been out on EMERGENCY FAMILY LEAVE since December 2008 and there is not a known scheduled return date.

This required reading is 100% complete.

RR-09-004

TFC-ENG-DESIGN-C-06, Rev G-5

Engineering Change Control

BACKGROUND

PER-2008-0137 identified the following issue:

> "U. S. Department of Energy (DOE), Office of River Protection (ORP) conducted a surveillance of the implementation of Quality Assurance Program (QAP) requirements for testing and storage of HEPA filters. The surveillance identified the following Finding:
>
> S-08-ESQ-TANKFARM-017-F01: Recently installed HEPA filters that are nonconforming to the current procurement specification were not documented as nonconforming and dispositioned for use at the time of installation as required."

The cause of this event was that an ECN was issued to revise the procurement specification for HEPA Filters after the purchase order for these filters was issued, but prior to their receipt and acceptance. These HEPA Filters were not received and accepted against the revised procurement specification.

PER-2008-1301 identified the following areas of potential improvement to identify and track non-engineering affected documents as part of the of the engineering change process:

- "Recommendation: revise the ECN procedure to recognize that projects may track procedure development outside of block 25 on the form and allow this (separate schedule items or checklists)."
- "Recommendation: specifically allow the approach of tracking non-engineering document changes on a "parent" ECN or document and not requiring them to be listed on each subsequent ECN."
- "Recommendation, revise the procedure and form instruction to match to avoid error traps."

SUMMARY OF CHANGES:

- Added a new requirement to evaluate the design change impacts on prior or in-process procurements, and to initiate a Nonconformance Report in accordance with TFC-ESHQ-Q_ADM-02, if impacts are identified.
- Added clarification to allow projects to track procedure development outside of block 25 on the ECN form.
- Added clarification to allow the approach of tracking non-engineering document changes on a "parent" ECN or document and not requiring them to be listed on each subsequent ECN.
- Revise the procedure and ECN form instructions to be consistent.

NOTE: Revised ECN form instructions have been issued in conjunction with this procedure revision, and posted on the FORMS WEB PAGE.

General Instructions: All blocks on the ECN must be filled out. If a block is not applicable to the change being made, then "N/A" or "not applicable" needs to be entered into the block. The exceptions are Blocks 16a, 16b and 16c, which can be left empty until work is completed.

Corrections to hard copy (printed) ECNs shall be made by drawing a single line through the incorrect information and entering the correct information as close as possible to the original information. The initials of the individual making the corrections and the date of the correction shall be made adjacent to the correction.

Title Block: Insert the ECN page number. ECN continuation pages and ECN attachments (ECN-1 and ECN-2 forms, when used) shall be sequentially paginated into the ECN (after the main body of the ECN).

Title Block: Indicate if the change is a document modification (DM), a field modification (FM), or a temporary modification (TM).

Block 1a: Record the ECN number and revision number obtained from the Hanford Document Numbering System (HDNS). The original ECN shall be identified as revision "0." ECN revision "0" shall be issued prior to any other ECN revisions being released. ECN revisions shall use the same ECN number as the original ECN and use the next available revision number (obtained from HDNS). The ECN continuation pages shall clearly reference the applicable ECN and revision numbers. Enter N/A in this block for Project ECNs.

Block 1b: (Project ECNs only) Record the ECN number and revision number obtained from the Project Engineer. Enter N/A in this block if this is not a Project ECN. ECN revisions shall use the same ECN number as the original ECN and use the next available revision number (obtained from HDNS). The ECN continuation pages shall clearly reference the applicable ECN and revision numbers.

Block 2: Identify if the ECN is a Simple Modification (see TFC-ENG-DESIGN-C-06 for definition of "Simple Modification").

Block 3: Complete and attach Design Inputs (ECN-1 form (A-6003-567.1) if Block 2 is marked "No."

Block 4: Identify the date that the ECN was prepared.

Block 5: Identify the originator's name, organization, MSIN (as applicable), and phone number.

Block 6: Ensure a Process Hazard Analysis (PrHA) Screening Form is completed as required by TFC-ENG-DESIGN-C-35. If this is an exempt activity per TFC-ENG-DESIGN-C-35, check N/A and provide a justification for the exemption in Block 19.

Block 7: When a USQ is required, ensure a USQ is generated in accordance with the requirements stated in TFC-ENG-SB-C-03 and record the USQ number. If the document change (DM type ECNs only) is inconsequential per the definition in Figure 3 of TFC-ENG-SB-C-03, then simply record "GCX-2" in accordance with Step 4.4.2.b of TFC-ENG-SB-C-03. If the N/A box is marked, provide the rationale for this selection in the justification (Block 19) of the ECN. If a document change (DM type ECNs only) supports a safety basis amendment that is being submitted to ORP for approval, then specify in Block 19 that a USQ evaluation is not required, and identify the safety basis amendment that the document change supports.

Block 8: Identify any related ECN(s) associated with the generation of this ECN; if none, insert N/A.

Block 9: Identify the title of the ECN. The title should be descriptive of the change being made, and, in general terms, should identify the facility and system being modified (e.g. equipment ID numbers are included elsewhere on the ECN and are not necessary in the title).

Block 10: Identify the building/facility number where the modification will be made.

Block 11: Identify the equipment/component identification number. If multiple entries exist document the information in Block 18.

Block 12: Identify the independent reviews and approvals needed for this ECN (Block 12) in accordance with Table 1 of TFC-ENG-DESIGN-C-06. Enter all approvals required for the ECN.

Block 13: Identify the engineering document(s)/drawing(s) being changed by this ECN. Enter complete information to identify the document; drawing or document number, sheet number and revision number. When canceling or voiding an ECN, list the ECN number and revision number (not the engineering document or drawing number). Should multiple drawings/documents need to be changed, list in the description block of the ECN (ECN continuation pages, as required).

Block 14: Identify the safety designation of the equipment being modified. Only equipment has safety designations associated with it, hence non-equipment changes do not have any safety designation associated with the change. If multiple safety designators are identified for the equipment being modified in the ECN or ECN revision, check the highest safety designation noted.

Block 15: Identify if this ECN is an Expedited/Off-Shift ECN (Block 15) (see TFC-ENG-DESIGN-C-06).

Block 16a: Identify the work package associated with installing the change in the tank farm facility. If a work package number is not known, but field work is required, leave blank (shall be filled in when submitting the work complete signature). If this is a document/drawing only change (no field work associated with the change), insert N/A in the work package number (16a), modification work complete (16b), and restored to original status (16c) blocks on the form.

Block 16b: Enter N/A if this is a DM type ECN. Leave blank for FM and TM ECNs until the field work is completed.

Block 16c: Enter N/A if this is a FM or DM type ECN. Leave blank for TM ECNs until the field work is completed and the facility restored to its original configuration.

Block 17: Identify if this ECN is a Fabrication Support ECN (see TFC-ENG-DESIGN-C-06, Section 4.7). If this is a fabrication support ECN, prepare fabrication instructions (including any special testing), as applicable. Provide instructions on an ECN continuation page labeled at the top as "Fabrication Instructions – Not to be Incorporated." These instructions should provide guidance to the shop to specify techniques, fabrication details, sequence, or special instructions and precautions.

Block 18: Document a description of the change and the assumptions used in the development of the change (use ECN continuation pages, as needed). For an ECN revision or a Project ECN, as applicable, list and summarize the FCNs addressed. The change description shall include, as a minimum: problem identification, solution, and analysis that supports the solution. Assumptions may be used in the absence of specific criteria. When used, assumptions shall be clearly identified and the basis or source information for an assumption shall be documented. Assumptions may be justified based on engineering judgment or operating experience. Where engineering judgment is used to support assumptions, the technical basis for the engineering judgment shall be documented. Equipment limitations or performance requirement may imply an assumption to be considered.

Identify the "WAS" (prior to the change) and "IS" (after the change is implemented) conditions within the ECN (to assist in the installation and design media change implementation). In addition, identify the references and interfaces (e.g., utility tie-ins) used to generate the design change. Include Restoration Instructions for temporary modifications (TMs). Sufficient information must be presented to provide direction to the person updating the document. For example, the drafter or designer (for a drawing) should be able to make the change to the drawing without having to call the ECN originator for more information or requiring rework when the drawing comes back for approval.

Interfaces between two projects or a project and the operating facility shall be clearly defined and identified.

Prepare installation instructions (including any special testing), as applicable. Provide installation instructions on an ECN continuation page labeled at the top as "Installation Instructions – Not to be Incorporated." These instructions should provide guidance to the planner, and to field installation personnel to specify techniques, installation details, sequence, or special instructions and precautions. The level of detail provided should be commensurate with the complexity of the modification and should consider whether installation requires unusual techniques or special sequencing.

Block 19: Document the justification of the change and identify if the change involves engineering rework and if there are any training impacts. If training impacts are identified, include a description of the required training and notify the Manager, Training (e.g., e-mail) of any identified training required for processing in accordance with TFC-BSM-TQ_ADD-C-01. For an ECN revision or a Project ECN, as applicable, provide the justification(s) associated with the FCNs addressed. What is expected is a concise technical justification of why the change is being made and why it is appropriate to make this change. As applicable, identify the PER numbers associated with the ECN.

Block 20: Document the ECN category (either direct revision, supplemental or void/cancel). If this ECN is a supplemental ECN, identify what ECN type the change is (supercedure, revision, or leave blank).

Block 21: Identify the distribution list for the change. Training and Operations should be considered for inclusion in the distribution list. Attach a distribution list to the ECN, as applicable, when the number of individuals to receive the ECN exceeds the area in Block 21.

Block 22: Identify if any future ECN revisions are planned. If none are planned, insert N/A.

Block 23: Identify and document the commercial grade item upgrade dedication (CGI) numbers that are associated with the design change (see TFC-ENG-DESIGN-C-15); insert N/A if there are none.

Block 24: Identify and document the Engineering Data Transmittal (EDT) number(s) associated with release of drawings or documents that are driven by the design change (see TFC ENG DESIGN C-25); insert N/A if there are no EDTs associated with the modification.

Block 25: Identify any other non-engineering (not in HDCS) documents that will need to be changed due to this modification (e.g., preventive maintenance (PM) data sheets, operating procedures, maintenance procedures), and are required to be updated before the ECN can be implemented. A project may track Non-Engineering documents outside of Block 25. If none, insert N/A. Block 25 can be N/A for ECNs that do not include changes to the facility or its operation. If the non-engineering documents are listed in an Operational Acceptance Checklist (OAC) per TFC-PRJ-PM-C-06, identify the OAC. Non-engineering document changes identified on a Parent ECN do not have to be re-listed on subsequent ECNs. Changes to the documents identified in Block 25 must be completed before the ECN can be signed as "Work Complete."

Block 26: Identify if the ECN includes any FCN(s). If yes, include the information generated on the Field Change Notice form(s) (ECN-2 forms) in this FM, TM or Project ECN. Attach the FCNs to this ECN or Project ECN, describe in Block 18 of the ECN and justify the FCNs (whether field implemented or not), and identify/document the permanent design media changes.

Block 27: Identify if design verification is required (see TFC-ENG-DESIGN-P-17).

Block 28: Record all required approvals on the ECN form. For ECNs prepared and checked by an outside architect-engineer (A-E) firm, record the checker's signature in the A-E signatures column of the ECN form by noting in the "Other" line "Checker," followed by a signature of the contractor Engineering Checker. In addition, in the Facility/Project Signatures column in the Engineering Checker line, the text "Checking Completed by A-E" will be written.

Save

Problem Evaluation Request (PER)

WRPS-PER-2008-0149
Closed 11/10/2008 10:45

PER No	Date of Discovery	Time of Discovery (24:00)	Project
WRPS-PER-2008-0149	10/29/2008	13:30	Radcon-BO

Location

S Farm

How Was Problem Discovered

Radiological Surveys

Description of Concern or Problem

High levels of contaminated rabbit feces have been discovered inside and outside of the S-complex with activity levels ranging from 5000 dpm/100cm2 beta gamma and no alpha, up to 110 mrad/hr/100cm2 beta gamma uncorrected (corrected rate of 19.8 rad/hr/100cm2) with 1250dpm/100cm2 alpha. Highest in an unposted area (adjacent to S trailer) was 200,000 dpm/100cm2 beta gamma with <20 dpm/100cm2 alpha. This finding along with other similar contamination events occurring around this same complex are indicative of a serious contamination source somewhere nearby. Failure to seek out this contamination source directly contributes to the buildup and spread of contamination inside and outside the complex which compromises the radiological safety of the personnel at our facility. Also the fact that some of the feces had alpha contamination could indicate the possibility of S-102 waste spill playing some part.

Requirement Not Satisfied	Source Document Number
HNF-5183 too many to list	

Equipment Identification Number	System Identification
241-S complex	Waste Storage Tank

Immediate actions Taken or Planned

1. Cleaned up contamination discovered above 100,000 dpm/100cm2 beta gamma inside the farm.
2. Cleaned up contamination discovered outside of S trailer.
3. Notified Radcon superviser.
4. Notified shift manager.
5. Issued RSR# WTO-012287.
6. Issued PER.

Recommended Corrective actions

Let us seek out the source and dispose of it, if there is one in or around our tank farm, if a source is found then we can stop it from spreading. If no source is found then at least we will know that it is either no longer there, didn't come from the farm but at least we will know we are no longer causing more contamination spreads.

Originator Contact

1. I would like to help define the problem. 2. I would like to help in investigating the cause. 3. I would like to review the the corrective actions at closure to ensure they were effective.

Originators Name	Originators ID	Originators Phone	Date Initiated
Cole, Ross V	H0070822	(509) 373-2526	10/30/2008

SHIFT OPERATIONS REVIEW

Title

High levels of contaminated rabbit feces have been discovered inside and outside of the S-complex

How Discovered	Agency
self-ID prior to event	

Reportability	SSC Operability	Operability Review	Comp Measures Req
Non-Reportable	N/A	N/A	

Describe actions Taken or Recommended

Outside contamination was reported to FH POC for reportability. Recommend assigning to Facility Manager/Radcon for resolution. BO SO.

SO Reviewer Name	SO Reviewer ID	SO Reviewer Phone	SO Review Date
Andrews, Jeffrey E	H0078933	(509) 373-2689	10/30/2008

SCREENING

PER Significance Level	

PIE/CIM			
Independent Assessment Review	**Occurrence Report Number**	**Externally Identified**	
No		No	
Assigned Responsible Manager	**Facilities Rep / SSO**	**Safety Management Rep**	
Ficklin, Jim			
Program		**Safety Management Program**	
• **N/A**		• **N/A**	
PER Screening Comments			
Fluor Hanford will take care of outside contamination. Requested that RSR # WTO 012287 be attached to this PER. (Nancy Brown 11/03/08)			
Causal Code			
MGT/Comm/Train	**Human Performance**	**GEMS**	**Equip/Eng/Other**
Failed Barrier	**ORPS Code**	**Functional Area**	**Work Process**
	Not Applicable	Radiation Protection	• Radiological Contamination Control
ISMS	**Consequence Code**		
Perform work within the controls	• Contam - Legacy - Discovery of contamination from past practices or spills in soil, animal, or vegetation		
PER Screening Chair	**PER Screening Chair ID**	**PER Screening Chair Phone**	**PER Screening Date**
Brown, Nancy L	H0088797	(509) 373-0992	11/03/2008
PAAA REVIEW			
PAAA Screening	**PAAA Codes**	**Function Codes**	
Not subject to PAAA			
NTS Report Number	**NTS Report Date**		
Repetitive / Recurrent	**Programmatic**	**Intentional Violation / Misrepresentation**	
No	No	No	
PAAA Screening Comments			
PAAA Reviewer Name	**PAAA Review Date**		
Anderson, Craig E	11/03/2008		
PAAA Approver Name	**PAAA Approve Date**		
Anderson, Craig E	11/04/2008		
SENIOR MANAGEMENT REVIEW/CONCURRENCE			
TF Operations Morning Leadership Call			
None. 11/4/08			
Instructions for Responsible Manager			
Evaluate suggestion, enter comments and required actions on PIE/CIM tab of the PER. Disposition in accordance with TFC-ESHQ-Q_C-C-01, Problem Evaluation Request.			
Senior Management	**Sr Mgmt ID**	**Sr Mgmt Phone**	**Sr Mgmt Review Date**
Owen, Annette	H0054042	(509) 372-0533	11/04/2008
CAUSE ANALYSIS			

Description of Occurrence

Extent of Condition

Safety Significance

Generic Implications

Remedial Corrective Action

Causal Analysis, Apparent Cause and/or Root Cause Analysis

PIE/CIM

Evaluation of PIE/CIM Initiative

I posed this question to the RadCon Organization regarding this PER, "The link is to a PIE/CIM PER recently assigned to me (among others). I believe it should have been assigned to RadCon. PERs requiring a specific area to be cleaned-up/deconned come to me, but this one requires radiological expertise in determining the source, & a resolution/path forward. Please look at the PER and let me know what we should do with it."

The response is as follows: "We do not have $$ in our contract to track down Biological intrusions outside of the farm as that is outside of our scope. The only thing we can do is pick up what we find inside the fence, and if it's easy enough, what is outside of the fence. That is usually assigned to the farm owner as a TUF. As you know, the biological control issue is one heck of a mess, hopefully the team we have on it will make some headway so that these issues can be firmly addressed by the responsible contractor."
The referenced "Team" was established prior to the issuance of the subject PER and it is tasked with addressing the issues discussed in PER-2008-0149, as well as others. Current status/path forward is as follows:

A team consisting representatives from WRPS, CHPRC and FH has been established to resolve the issue you are faced with. At our first meeting last week each contractor was assigned a task for a path forward to resolve the issues. The following is a brief on what we are doing.
1. Team 1 – Develop, define and map boundaries and barriers
Team Leader:
FH - Kevin Ekstrom
Mr. Ekstrom has confirmed that he is the right party.
Nov. 28, 2008

2. Team 2 – Establish current and future veg. & biol. control needs, prioritize list of areas requiring near term and future cleanup, complete proposed schedule and list of needs from operations (PRC, TOC) to support cleaning up the identified legacy issues
Team Leader:
FH – Ray Johnson
Status at next mtg.

3. Team 3 – Develop consistent rad. survey and posting practices and reach agreement between Contractors, clarify R2A2s
Team Leader:
TOC - Jim Rolph
TBD

4. Integrate near and long-term schedule into Contractor (TOC, PRC) schedules and planning cycles
TOC & PRC Operations
TBD

5. Setup meeting for 2 weeks to status initial actions
TOC IM (Hatcher)
11/4/08 COMPLETE

Mtg. w/ team leads set for 11/18 @ 3 pm

6. Document agreements on AIA – one document for all 3 Contractors
TOC IM will lead (Hatcher); involves TOC, PRC, FH
TBD

No additional corrective actions via PER-2208-0149 are required; the Site RadCon Organizations are already pursuing resolution. This PIE/CIM suggestion will not be adopted & this PER can be closed.

ATTACHMENTS
Link to PER
WRPS-PER-2008-0149 High levels of contaminated rabbit feces have been discovered inside and outside of the S-complex .msg
WRPS-PER-2008-0149 Team Effort.msg

AUDIT HISTORY

Change Date	Auditor	Comments
11/03/2008 15:09	Brown, Nancy L	'Program/Project' was changed from Don't Know to Rad Con BO.
11/04/2008 08:21	Owen, Annette	Responsible Manager Task Launched by Owen, Annette

-- End of Report --
11/10/2008 10:45 AM

Task# WRPS-PER-2008-0149			
E-STARS[R] Report Task Detail Report 11/10/2008 1045			
TASK INFORMATION			
Task#	WRPS-PER-2008-0149		
Subject	PIE; High levels of contaminated rabbit feces have been discovered inside and outside of the S-complex		
Parent Task#		Status	CLOSED 11/10/2008
Reference		Due	12/29/2008
Originator	^PER Coordinator	Priority	Medium
Originator Phone		Category	PER
Origination Date	10/30/2008 1033	Generic1	None
Remote Task#		Generic2	None
Deliverable	PER Review	Generic3	None
Class	None	View Permissions	Global
Instructions	*No Instructions*		
ROUTING LISTS			
1	Responsible Manager		Inactive
	Evaluate suggestion, enter comments and required actions on PIE/CIM tab of the PER. Disposition in accordance with TFC-ESHQ-Q_C-C-01, Problem Evaluation Request.		
	• Ficklin, Jim - Assign - Completed with comments - 11/10/2008 0811 *Instructions:*		
	• Ficklin, Jim - Assign - Completed - 11/10/2008 0811 *Instructions:* Did you contact the originator about the PER? Document your contact in the response window.		
2	Review Initial PER		Inactive
	Review New PER		
	• ^SO(Andrews, Jeffrey E) - Review - Concur - 10/30/2008 1045 *Instructions:*		
	• ^PER Screening(Brown, Nancy L) - Review - Concur - 11/03/2008 1513 *Instructions:*		
	• ^Mgr Review(Owen, Annette) - Review - Concur - 11/04/2008 0821 *Instructions:*		
ATTACHMENTS			

Task# WRPS-PER-2008-0149			
Attachments	1. Link to PER 2. WRPS-PER-2008-0149 High levels of contaminated rabbit feces have been discovered inside and outside of the S-complex .msg 3. WRPS-PER-2008-0149 Team Effort.msg		
COLLABORATION			
COMMENTS			
Poster	Ficklin, Jim - 11/10/2008 0811		
	Completed		
	PIE/CIM evaluation complete. This recommendation will not be adopted due to the fact that there is already an ongoing team effort to address the burgeoning contamination issues in/around S Complex, among other Site legacy contamination issues. An e-mail describing the multi-contractor team effort, points-of-contact, and current status has been attached to the associated TDR. A feedback e-mail to the PER originator has also been attached. This PER can be closed.		
Poster	^PER Coordinator (Glaman, Linda R) - 11/10/2008 1011		
	CLOSED		
	Originator Contact confirmation was included in the 1st completion statement and documented with attached evidence. PER complete. L Glaman		
TASK DUE DATE HISTORY			
Modified	11/04/2008 0821 - ^PER Coordinator	New Due Date	12/29/2008 1630
Modified	11/04/2008 0821 - ^PER Coordinator	New Due Date	12/29/2008 1630
Modified	10/30/2008 1033 - ^PER Coordinator	New Due Date	11/01/2008 1630
SUB TASK HISTORY			
No Subtasks			
-- end of report --			

Message

From: Welch, Jerry L

Sent: Friday, November 07, 2008 3:03 PM

To: Ficklin, James W (Jim); Brannan, Patrick B (Brad)

Subject: RE: S Farm Contamination PER

Jim,
A team consisting representatives from WRPS, CHPRC and FH has been established to resolve the issue you are faced with. At our first meeting last week each contractor was assigned a task for a path forward to resolve the issues. The following is a brief on what we are doing.

1. Team 1 – Develop, define and map boundaries and barriers	Team Leader: FH - Kevin Ekstrom ***Mr. Ekstrom has confirmed that he is the right party.***	Nov. 28, 2008
2. Team 2 – Establish current and future veg. & biol. control needs, prioritize list of areas requiring near term and future cleanup, complete proposed schedule and list of needs from operations (PRC, TOC) to support cleaning up the identified legacy issues	Team Leader: FH – Ray Johnson	Status at next mtg.
3. Team 3 – Develop consistent rad. survey and posting practices and reach agreement between Contractors, clarify R2A2s	Team Leader: TOC - Jim Rolph	TBD
4. Integrate near and long-term schedule into Contractor (TOC, PRC) schedules and planning cycles	TOC & PRC Operations	TBD
5. Setup meeting for 2 weeks to status initial actions	TOC IM (Hatcher)	11/4/08 **COMPLETE** Mtg. w/ team leads set for 11/18 @ 3 pm
6. Document agreements on AIA – one document for all 3 Contractors	TOC IM will lead (Hatcher); involves TOC, PRC, FH	TBD

Jerry Welch
Base Operations
RadCon
372-1819
Cell 539-2790

From: Ficklin, James W (Jim)

Sent: Friday, November 07, 2008 1:37 PM
To: Brannan, Patrick B (Brad); Welch, Jerry L
Subject: RE: S Farm Contamination PER

thanks!

From: Brannan, Patrick B (Brad)
Sent: November 07, 2008 1:19 PM
To: Welch, Jerry L
Cc: Ficklin, James W (Jim)
Subject: FW: S Farm Contamination PER

Jerry,

Please get this info to Jim.

Thanks,

Brad

From: Ficklin, James W (Jim)
Sent: Friday, November 07, 2008 1:19 PM
To: Brannan, Patrick B (Brad)
Cc: Tucker, Ronald P; 'Welch, Jerry L'
Subject: RE: S Farm Contamination PER

Can you send me some information regarding that "team" . . . I can use that to close this PIE/CIM, since that effort is already in progress.

From: Brannan, Patrick B (Brad)
Sent: November 07, 2008 1:17 PM
To: Ficklin, James W (Jim)
Cc: Tucker, Ronald P; Welch, Jerry L
Subject: RE: S Farm Contamination PER

Jim,

We do not have $$ in our contract to track down Biological intrusions outside of the farm as that is outside of our scope. The only thing we can do is pick up what we find inside the fence, and if it's easy enough, what is outside of the fence. That is usually assigned to the farm owner as a TUF. As you know, the biological control issue is one heck of a mess, hopefully the team we have on it will make some headway so that these issues can be firmly addressed by the responsible contractor.

I know I'm stating the obvious. Sorry.

Brad

From: Ficklin, James W (Jim)
Sent: Friday, November 07, 2008 11:18 AM
To: Brannan, Patrick B (Brad)
Cc: Tucker, Ronald P
Subject: S Farm Contamination PER

Importance: High

Brad,

The link is to a PIE/CIM PER recently assigned to me (among others). I believe it should have been assigned to RadCon. PERs requiring a specific area to be cleaned-up/deconned come to me, but this one requires radiological expertise in determining the resolution/path forward. Please look at the PER and let me know what we should do with it.

http://tfc.rl.gov/per/index.cfm?page=main.cfm&perid=28949

Thanks.

j.

Ross,

Please see my update to the referenced PER and the e-mail attached to the associated TDR. A joint effort between FH, the PRC, and WRPS is already in progress and is intended to find resolution to the issue you have identified as well as other radiological concerns throughout the 200 Areas plateau.

Thank you for your input.

j.

Save

Problem Evaluation Request (PER)

WRPS-PER-2008-0189
In Process/Work

PER No	Date of Discovery	Time of Discovery (24:00)	Project
WRPS-PER-2008-0189	11/04/2008	13:30	Other

Location

All Tank Farms

How Was Problem Discovered

General Observation

Description of Concern or Problem

A potential adverse trend is crane operations has been observed. Specific examples include PERs 2008-0835, 2008-0723, 2008-1091, 2008-1295, and 2008-1891.

Requirement Not Satisfied	Source Document Number

Equipment Identification Number	System Identification
	Not Applicable

Immediate actions Taken or Planned

In addition to the specific corrective actions for the PERs a Root/Common Cause analysis team was chartered to evaluate the issues.

Recommended Corrective actions

Route PER to W. L. Gaydosh for further evaluation.

Originator Contact

I would like to review the the corrective actions at closure to ensure they were effective

Originators Name	Originators ID	Originators Phone	Date Initiated
Brown, Robert L	H0000967	(509) 372-2932	11/05/2008

SHIFT OPERATIONS REVIEW

Title

A potential adverse trend is crane operations has been observed.

How Discovered		Agency	
self-ID prior to event			
Reportability	**SSC Operability**	**Operability Review**	**Comp Measures Req**
Non-Reportable	N/A	N/A	

Describe actions Taken or Recommended

Red Arrow entered into Base Ops Shift log Reading "All work involving crane operations require approval from Base Ops HRB or SST Retrieval HRB prior to release". No further actions.

SO Reviewer Name	SO Reviewer ID	SO Reviewer Phone	SO Review Date
Strasser, David W	H0075556	(509) 373-2689	11/06/2008

SCREENING

PER Significance Level			
Significant			
Independent Assessment Review	**Occurrence Report Number**	**Externally Identified**	
No		No	
Assigned Responsible Manager	**Facilities Rep / SSO**	**Safety Management Rep**	
Gaydosh, William L			
Program		**Safety Management Program**	

- ^N/A^
- Hoisting & Rigging

PER Screening Comments

PER w/ Res -- complete root cause analysis and iniate appropriate actions (see attached Charter).
PER assignment pending Team Lead's (WL Gaydosh) completion of required Corrective Action Management training.
cc: WL Gaydosh, Tim Kramer, Tom Mackey

DECLINE PER w/ Res: Request re-screening to Significant PER. (Bill Gaydosh 01/19/09)

RE-SCREENING COMMENTS: Change from PER w/ Res to Significant. Remains assigned to Bill Gaydosh. Craig Anderson will be generating an NTS report on this adverse trend.
(Nancy Brown 01/19/09)

Causal Code

A2B2C01	Equipment/Material Problem Periodic/Corrective Maintenance LTA Preventive maintenance for equipment
A2B2C03	Equipment/Material Problem Periodic/Corrective Maintenance LTA Corrective maintenance
A3B2C02	Human Performance LTA Rule Based Error Signs to stop were ignored and step performed incorrectly
A4B1C05	Management Problem Management Methods LTA Management assessment did not determine causes of previous event or known problem
A4B4C05	Management Problem Supervisory Methods LTA Emphasis on schedule exceeded emphasis on methods/doing a good job
A5B2C08	Communications LTA Written Communications Content LTA Incomplete/situation not covered
A6B1C02	Training Deficiency No Training Provided Training requirement not identified

MGT/Comm/Train	**Human Performance**	**GEMS**	**Equip/Eng/Other**
Failed Barrier	**ORPS Code**	**Functional Area**	**Work Process**
	Not Applicable	Occupational Safety and Health	• Corrective Action Management • Hoisting and Rigging • Safety Inspections
ISMS	**Consequence Code**		
Perform work within the controls	• Hoisting/Rigging - Unsafe or LTA hoisting and rigging • Safety Concerns - Safety concerns, suggestions, and potential safety issues		
PER Screening Chair	**PER Screening Chair ID**	**PER Screening Chair Phone**	**PER Screening Date**
Brown, Nancy L	H0088797	(509) 373-0992	11/07/2008

PAAA REVIEW

PAAA Screening	**PAAA Codes**	**Function Codes**
Potential PAAA Reportable	• 10 CFR 830.121 (c)(1) • 10 CFR 830.121 (c)(3) • 10 CFR 830.122 (d)(1) • 10 CFR 830.122 (g)(3) • 10 CFR 851.23 (a)(3)	• Corrective Action Program • Procedure Quality • Subcontractor Noncompliance • Construction Safety
NTS Report Number	**NTS Report Date**	

Repetitive / Recurrent	Programmatic	Intentional Violation / Misrepresentation
No	No	No

PAAA Screening Comments

Hoisting and rigging programmatic issues pointed out in common cause analysis of 2008 events.

PAAA Reviewer Name	PAAA Review Date
Anderson, Craig E	01/19/2009
PAAA Approver Name	**PAAA Approve Date**
Anderson, Craig E	01/19/2009

SENIOR MANAGEMENT REVIEW/CONCURRENCE

TF Operations Morning Leadership Call

None. 11/10/08

TF Operations Morning Leadership Call is no longer required.

Instructions for Responsible Manager

Perform RCA & CAP with End Point Assessment Criteria in accordance with TFC-ESHQ-Q_C-C-01, PER & TFC-ESHQ-Q_ADM-C-11, Root & Common Cause Analysis & Corrective Action Planning. 'Save' Causal tab on PER. Ensure PER is on ESRB agenda.

Senior Management	Sr Mgmt ID	Sr Mgmt Phone	Sr Mgmt Review Date
Owen, Annette	H0054042	(509) 372-0533	01/20/2009

CAUSE ANALYSIS

Description of Occurrence

The following is a summary of the primary events evaluated to develop this causal analysis report

CH2M-PER-2008-0723 and Fact Finding EIR-08-0006
April 6 (110 ton crane)

A wire rope spooling problem occurred April 6, 2008 while making a special lift in C Farm causing the load to suddenly lower approximately 18 inches while suspended from the crane. The cause of the problem was misdiagnosed and the crane was returned to without the problem being corrected.

Additionally, this lift was attempted with an incorrectly configured crane, in that; the wire rope was incorrectly reeved during a special lift evolution. This did not affect the load lowing suddenly, but reflects an independent issue.

CH2M-PER-2008-0835
April 16 (90 ton crane)
While preparing to install a transfer pump jumper in AZ Farm the crane experienced an error code which deactivated its control system. The ensuing investigation revealed this had been an ongoing problem with this particular crane. FH Fleet maintenance personnel had made several attempts to address the issue but only temporary fixes had been achieved. Further investigation identified an electrical short in the wiring of the swing proximity switch. Crane mechanics had been aware of this short but did not take action to obtain a replacement part. Further it was discovered that a manufacturer's modification had been made to this particular part several years ago making it less susceptible to the condition.

CH2M-PER-2008-1091
May 16 (Jib hoist in ATCO shop)
This PER identifies a problem in the ATCO shop where sparks were observed between a non-electric lifting magnet and a metal fabrication table. The magnetic lifting device was suspended from an electric hoist on a jib crane. During a fact finding meeting, mechanics performing the work also reported hearing unusual noises coming from the electric hoist after observing the sparks. This event was classified as a management concern and Occurrence Report CHG TANKFARM-2008-0005 was initiated.

At the request of the Safety SME for hoisting and rigging, the lead equipment custodian followed up and requested an inspection and load test by qualified FH crane and rigging personnel. The hoist failed load test with just over 50 percent capacity applied. It was removed from service and must be repaired in accordance with manufacturer specifications or replaced.

CH2M-PER-2008-1891
Sept 20 (90 ton crane)

A load dropped approximately 8 inches and moved horizontally 18 inches when attempting to place the cover plate on POR104. During the lifting operation, the LMI restricted crane functions as a protective measure. Work continued with the crane to put the load on the ground. The crane was returned to service the next day, but removed from service when subsequent testing found that "...the boom retracted freely a few feet."

Extent of Condition

Extend to condition reviews were performed for each individual event:
3.1.6 Extent of Condition CH2M-PER-2008-0723.1

The direct cause of the event was the incorrect reeving of the auxiliary hoist load line during the swing-away jib installation. There are very few mobile cranes in use that have the elevated sheave that requires the modified reeving for jib installation. The FH representative on the root cause analysis team reported that FH had inspected all other cranes and had not found a similar issue.
Extent of Condition CH2M-PER-2008-0723.2

The direct cause of the event, that the first layer of wire rope was not spooled correctly is limited to cranes. All cranes have been inspected and full length wire rope inspections performed.

Extent of Condition CH2M-PER-2008-0835

For this event direct cause the extent of condition is limited. The causal analysis team does not have access to crane maintenance bulletins to determine if other similar conditions exist. However, during the assessment it was noted that the FH Fleet Maintenance organization had, in at least two cases, not maintained a crane in accordance with manufacturer's specifications. These situations were an incorrect frequency of lubrication for the booms on both the 75 and 90 ton cranes and missing approximately a dozen lubrication points on both cranes. This cannot be attributed solely to a lack of training by mechanics, but a lack of review of the information provided by the manufacturer for recommended maintenance frequencies.

Extent of Condition CH2M-PER-2008-1091

The direct cause of the event, the broken foot peddle, is relatively limited in scope. The root cause of the event, an inadequate investigation of the event has broader implications. Inadequate investigation processes by the TOC were noted in CH2M-PER-2008-0723 and CH2M-PER-2008-1891 as well. Corrective actions are included in the report to address this issue.

Extent of Condition CH2M-PER-2008-1891

Although the manufacturer indicated that boom retraction due to thermal contraction of the hydraulic fluid is possible in all hydraulic cranes, the boom design of the 90 ton and 75 ton Grove cranes is more susceptible to this phenomenon.

The facts that the specified lubrication for the boom segments was incorrectly too infrequent, the design of the boom segment friction pads and that the boom was left extended for several hours contributed to the severity of the event.

Maintenance records were reviewed for both the 75 and 90 ton crane to ensure the lubrication frequencies were modified. This review was performed by FH at the request of the causal analysis team.

Safety Significance

Safety Implications CH2M-PER-2008-0723.1

The condition, as related to the loss of control of the load, reflects a significant safety concern that could cause harm to personnel and equipment.

Safety Implications CH2M-PER-2008-0723.2

The condition reflects a significant safety concern in that required inspections were not performed nor clearly delineated in procedure.

Safety Implications CH2M-PER-2008-0835

The safety implications are clear. Some cranes have functions disabled by the LMI system during work activities due to error codes received. Bypassing, ignoring or improperly responding to these conditions can result in potentially life threatening events, such as observed on PERs 2008-0723 or 2008-1891.

When this happens, workers, including the crane operator, designated lead, FWS, or any person recognizing the hazard must take action as trained and stop the work until the hazard is understood and mitigated.

Safety Implications CH2M-PER-2008-1091

The craft did not recognize the hazard that existed when they saw the first spark. This should have been an indication that the potential of an electrical short was present. This is a condition where someone could have been shocked, but the work continued.

The failure to test the hoist prior to returning to service also has safety implications. The failure mode in this case did not result in a catastrophic failure that was not due to TOC diligence rather by circumstance. Hoisting device failure has the

potential to cause serious injury.

Safety Implications CH2M-PER-2008-1891

The safety implications are significant. Workers re-entered the work area to manipulate a suspended load on a malfunctioning crane without knowing what the malfunction was. Continuing work with hoisting and rigging equipment without fully understanding the malfunction can result in injury or death.

The crane was placed back in service without diagnosis or correction of the problem. As such, the event could have occurred again with serious consequences.

Generic Implications

Generic Implications CH2M-PER-2008-0723.1

The major reconfiguration of cranes in the field represents work that should have oversight by a designated representative of the equipment custodial company/organization. This issue was addressed by modifications to TFC-ENG-FACSUP-C-25, CH2M HILL hoisting and Rigging.

Generic Implications CH2M-PER-2008-0723.2

Relative to crane activities, this event brings into question the implementation of the inspection criteria of DOE-RL-92-36, Hanford Hoisting and Rigging Manual. Recommendations to FH will include a review of crane inspection procedures in use against the criteria of DOE-RL-92-36, Hanford Hoisting and Rigging Manual.

Generic Implications CH2M-PER-2008-0835

The generic implications of this event are two fold. First the awareness that, as noted in the Fluor HPI assessment, the FH maintenance craft was poorly trained on the newer LMI computer dependent systems. This combined with the causal analysis team determination that training of the crane operators does not take into account response to error codes nor is it based on a systematic approach to training, in that a training analysis is not performed when new equipment with different or more complex systems are obtained.

The second generic implication is that the condition had existed for months and had manifested itself on several work activities at tank farms and had gone uncorrected. In this event the FWS, crane operator, and mechanic were ready to proceed but the SSW stopped the work activity and as a result, the actual issue was identified and corrected in a manner that would prevent recurrence.

The past failures to resolve the issue not withstanding, the responsibilities to stop work when equipment is malfunctioning is not standard practice where cranes are concerned and this is a significant potential hazard to workers.

Generic Implications CH2M-PER-2008-1091

The bulk of work at the TOC is performed using subcontractors in one form or another. Personnel issues aside, this event is clearly the result of poorly defined lines of responsibility for facility ownership and effective sub contractor oversight. The implications of this event are twofold. First, subcontractor personnel must be able to implement the stop work protocols expected of them, and second, the subcontractor oversight process must be robust. Corrective actions to implement these determinations are included in the report.

Generic Implications CH2M-PER-2008-1891

One of the more significant implications of CH2M-PER-2008-1891 is that the work was not suspended when TF-AOP-020 conditions were met, and that the significance of the event was not recognized either at the time of the event or immediately following the event.

As discussed throughout this report the willingness to suspend active work when new hazards are encountered is generally lacking. Personnel have demonstrated a tendency to work through the issue, failing to recognize the significance.

The fact that the crane was left in the tank farm without being tagged out of service means that by all measures used to date, the crane was available for use. Configuration control of equipment in the tank farms is critical.

Corrective actions being taken by FH address this issue.

Remedial Corrective Action

No specific remedial actions were initiated as a result of this PER. Actions taken during the causal analysis phase are attached in the causal analysis report.

Causal Analysis, Apparent Cause and/or Root Cause Analysis

Individual root cause analysis were performed for each event and are attached in the causal analysis report.

CORRECTIVE ACTIONS

Actionee	Action Due Date	E-STARS Number
Kramer, Tim F	02/27/2009	WRPS-PER-2008-0189.2

Action

CC-CA-01: Modify TFC-PLN-40, Hoisting and Rigging Safety Management Program Plan, and appropriate flow down procedures to address responsibility within WRPS to review the FH analysis resulting from a crane taken out of service due to a TOC event or identified problem requiring maintenance.

Deliverable: A modification to TFC-PLN-40, Hoisting and Rigging Safety Management Program Plan, and appropriate flow down procedures to address responsibility within WRPS to review FH analysis resulting from the crane taken out of service due to a TOC event or identified problem requiring maintenance.

Corrective Action Attachments

- 2008-0189.5-AEI-22337-OC-08-011 (HR Requirements) 12-18-08.pdf
- 2008-0189.5-AEI-22337-OC-08-011 Response.pdf
- 2008-0189.6-ADCA TFC-OPS-OPER-C-14.pdf
- ADCA-CC-CA-01.xdf
- Causal Team Charter WRPS-0800028-0810100014[1].pdf
- Link to PER
- PER 2008-0189 CCA Final.doc
- PLN-40-REV-C-2change notice.doc
- TFC-PLN-40,_REV C-2.doc

Actionee	Action Due Date	E-STARS Number
Gaydosh, William L	03/01/2009	WRPS-PER-2008-0189.3

Action

CC-CA-02: Perform a documented review of all current contracts for subcontractors performing field work (beyond walk downs and inspections) for Subcontractor Oversight Plan (A-6003-991) and verify determinations are made in accordance with TFC-ESHQ-S_SAF-C-07, Subcontractor Oversight.

Deliverable: Internal Memo to Manager, Safety Programs, citing reviews performed and results of review.

Corrective Action Attachments

- 2008-0189.5-AEI-22337-OC-08-011 (HR Requirements) 12-18-08.pdf
- 2008-0189.5-AEI-22337-OC-08-011 Response.pdf
- 2008-0189.6-ADCA TFC-OPS-OPER-C-14.pdf
- Causal Team Charter WRPS-0800028-0810100014[1].pdf
- Link to PER
- PER 2008-0189 CCA Final.doc
- PER 2009 0189(2).doc

Actionee	Action Due Date	E-STARS Number
Kramer, Tim F	12/18/2009	WRPS-PER-2008-0189.4

Action

CC-CA-03: Revise TFC-BSM-TQ-STD-18, Hoisting and Rigging Training Program Description, to ensure subcontractor crane operator training is commensurate with FH crane operator training requirements developed as a result of the training assessment.

Deliverable: Modified procedure.
*****
Approved due date extension to 5/28/09. tls 3/24/09
Approved due date extension to 12/18/09. tls 5/22/09

Corrective Action Attachments

- 2008-0189.5-AEI-22337-OC-08-011 (HR Requirements) 12-18-08.pdf
- 2008-0189.5-AEI-22337-OC-08-011 Response.pdf
- 2008-0189.6-ADCA TFC-OPS-OPER-C-14.pdf
- Causal Team Charter WRPS-0800028-0810100014[1].pdf
- Crane Operator Training Brief.htm
- Crane_Specific_OJE.xdf
- Link to PER
- NIOSH Alert-Preventing Electrocutions of Crane Operators and Crew Members Working Near Overhead Power Lines 95-108.mht
- PER 2008-0189 CCA Final.doc
- Re Crane Operator Training Brief.msg

Actionee	Action Due Date	E-STARS Number
Lesko, Karen F	02/19/2009	WRPS-PER-2008-0189.5

Action

CC-CA-04: Formally communicate to all subcontractors with existing contracts for performing crane operations in tank farms of the changes to TFC-ENG-FACSUP-C-25, CH2M HILL Hoisting and Rigging, generated as a result of corrective actions in this report.

Deliverable: Copies of communications to subcontractors.

Corrective Action Attachments

- 2008-0189.5-AEI-22337-OC-08-011 (HR Requirements) 12-18-08.pdf
- 2008-0189.5-AEI-22337-OC-08-011 Response.pdf
- 2008-0189.6-ADCA TFC-OPS-OPER-C-14.pdf
- Causal Team Charter WRPS-0800028-0810100014[1].pdf
- Link to PER
- PER 2008-0189 CCA Final.doc
- Formal communication to subcontractor

Actionee	Action Due Date	E-STARS Number
Tackett, Liz A	03/15/2009	WRPS-PER-2008-0189.6

Action

CC-CA-05: Modify TFC-OPS-OPER-C-14, Event Investigation Process, section 4.2, Conduct a Fact-Finding, to include involvement of subject matter experts and address protocol for the use of group meetings in the fact finding process.

Deliverable: Modification to TFC-OPS-OPER-C-14, Event Investigation Process, section 4.2, Conduct a Fact-Finding, to include involvement of subject matter experts and address protocol for the use of group meetings in the fact finding process.

Corrective Action Attachments

- 2008-0189.5-AEI-22337-OC-08-011 (HR Requirements) 12-18-08.pdf
- 2008-0189.5-AEI-22337-OC-08-011 Response.pdf
- 2008-0189.6-ADCA TFC-OPS-OPER-C-14.pdf
- Causal Team Charter WRPS-0800028-0810100014[1].pdf
- Link to PER
- PER 2008-0189 CCA Final.doc
- RE Event Investigation Procedure Revision for ESTARS 2008-0189.6.htm
- TFC-OPS-OPER-C-14 Rev D-1 to next.doc

Actionee	Action Due Date	E-STARS Number
Reynolds, Tammy R	03/15/2009	WRPS-PER-2008-0189.7

Action

CC-CA-06: Revise TF-AOP-020, Response for Placing Personnel and Equipment in a Safe Condition, section 2.0 to clearly address entry criteria and subsequent sections based on any modifications to entry criteria.

Deliverable: Revisions to TF-AOP-020, Response for Placing Personnel and Equipment in a Safe Condition, section 2.0 to clearly address entry criteria and subsequent sections based on any modifications to entry criteria.

NOTE: This revision need not be issued until April 15, 2009, to accommodate the training and briefings contained in CC-CA-07 and CC-CA-08.

Corrective Action Attachments

- 2008-0189.5-AEI-22337-OC-08-011 (HR Requirements) 12-18-08.pdf
- 2008-0189.5-AEI-22337-OC-08-011 Response.pdf
- 2008-0189.6-ADCA TFC-OPS-OPER-C-14.pdf
- 2008-0189.7 and 8-E-Mail Re AOP 20 Revision.htm
- add.pdf
- Causal Team Charter WRPS-0800028-0810100014[1].pdf
- Link to PER
- PER 2008-0189 CCA Final.doc
- Response to PER 2008-189.7.msg
- Tank Farms Orientation 350761 (2).pdf

Actionee	Action Due Date	E-STARS Number
Keith, Lloyd J	03/15/2009	WRPS-PER-2008-0189.8

Action

CC-CA-07: Update Tank Farms Orientation, course number 350761, to reflect modifications to TF-AOP-020.

Deliverable: Changes to the training that reflects changes to TF-AOP-020 as contained in CC-CA-06.

Corrective Action Attachments

- 2008-0189.5-AEI-22337-OC-08-011 (HR Requirements) 12-18-08.pdf

- 2008-0189.5-AEI-22337-OC-08-011 Response.pdf
- 2008-0189.6-ADCA TFC-OPS-OPER-C-14.pdf
- 2008-0189.7 and 8-E-Mail Re AOP 20 Revision.htm
- Causal Team Charter WRPS-0800028-0810100014[1].pdf
- Link to PER
- PER 2008-0189 CCA Final.doc
- WRPS-PER-2008-0189.8.pdf

Actionee	Action Due Date	E-STARS Number
Reynolds, Tammy R	04/15/2009	WRPS-PER-2008-0189.9

Action

CC-CA-08: Provide and document briefings for FWS, SSW, and Shift Manager qualified staff on changes made to TF-AOP-020, Response for Placing Personnel and Equipment in a Safe Condition.

Deliverable: Rosters showing completion of briefings for affected workers.

Corrective Action Attachments

- 2008-0189.5-AEI-22337-OC-08-011 (HR Requirements) 12-18-08.pdf
- 2008-0189.5-AEI-22337-OC-08-011 Response.pdf
- 2008-0189.6-ADCA TFC-OPS-OPER-C-14.pdf
- Causal Team Charter WRPS-0800028-0810100014[1].pdf
- Link to PER
- PER 2008-0189 CCA Final.doc

Actionee	Action Due Date	E-STARS Number
Maciuca, Tino	04/10/2009	WRPS-PER-2008-0189.10

Action

CC-CA-09: Modify TFC-ESHQ-Q_C-C-01, Problem Evaluation Request, section 4.3, Screen PERs to include identifying a SMPS owner ad identified in TFC-PLN-32, Tank Operations Contractor Safety Management Programs. For PERs with Resolution and Significant PERs, include the SMP owner or other staff identifed by SMP owner in the routing of the PER.

Deliverable: A modification to TFC-ESHQ-Q_C-C-01, Problem Evaluation Request, section 4.3, Screen PERs to inlcude identifying a SMP owner as identified in TFC-PLN-32, Tank Operations Contractor Safety Management Programs. For PERs with Resolution and Signficant PERs include the SMP owner or other staff identified by SMP owner in the routing of the PER.
*****
Approved due date extension to 4/10/09. tls 3/10/09

Corrective Action Attachments

- 2008-0189.5-AEI-22337-OC-08-011 (HR Requirements) 12-18-08.pdf
- 2008-0189.5-AEI-22337-OC-08-011 Response.pdf
- 2008-0189.6-ADCA TFC-OPS-OPER-C-14.pdf
- Causal Team Charter WRPS-0800028-0810100014[1].pdf
- Link to PER
- PER 2008-0189 CCA Final.doc
- TFC-ESHQ-Q_C-C-01,_Problem_Evaluation_Request.doc

Actionee	Action Due Date	E-STARS Number
Kramer, Tim F	07/31/2009	WRPS-PER-2008-0189.11

Action

CC-CA-10: SMP SME for hoisting and rigging review FH managment assessment of Fleet Maintenance for potential impacts to TOC and document review to the Manager, Safety and Health.

Deliverable: Internal memorandum documenting the review of the FH managment assessment of FH Fleet Maintenance.

NOTE: Dependent on FH completion of action.
*****
Approved due date extension to 7/31/09. tls 3/13/09

Corrective Action Attachments

- 2008-0189.5-AEI-22337-OC-08-011 (HR Requirements) 12-18-08.pdf
- 2008-0189.5-AEI-22337-OC-08-011 Response.pdf
- 2008-0189.6-ADCA TFC-OPS-OPER-C-14.pdf
- Causal Team Charter WRPS-0800028-0810100014[1].pdf
- Link to PER
- WRPS Compensatory Measure
- PER 2008-0189 CCA Final.doc

Actionee	Action Due Date	E-STARS Number
Maciuca, Tino	03/27/2010	WRPS-PER-2008-0189.12

Action

EPA-01: Perform and end point assessment of the corrective actions identified in this report that address the completion and effectiveness of corrective actions identified for both FH and WRPS.

Deliverable: An independent assessment of the corrective actions identified in this report that address the completion and effectiveness of corrective actions identified for both FH and WRPS.
*****
Approved due date extension to 3/27/10. tls 6/19/09

Corrective Action Attachments

- 2008-0189.5-AEI-22337-OC-08-011 (HR Requirements) 12-18-08.pdf
- 2008-0189.5-AEI-22337-OC-08-011 Response.pdf
- 2008-0189.6-ADCA TFC-OPS-OPER-C-14.pdf
- Causal Team Charter WRPS-0800028-0810100014[1].pdf
- Link to PER
- PER 2008-0189 CCA Final.doc

Actionee	Action Due Date	E-STARS Number
Brown, Robert L	01/27/2009	WRPS-PER-2008-0189.13

Action

Provide objective evidence that Lessons Learned IB-08-048, Clarification of Expectation for Crane Functional Check, was issued. (NOTE: This action is complete but is launched to gather objective evidence documentation).

Deliverable: A copy of Lessons Learned IB-08-048, Clarification of Expectation for Crane Functional Check.

Corrective Action Attachments

- 2008-0189.5-AEI-22337-OC-08-011 (HR Requirements) 12-18-08.pdf
- 2008-0189.5-AEI-22337-OC-08-011 Response.pdf
- 2008-0189.6-ADCA TFC-OPS-OPER-C-14.pdf
- Causal Team Charter WRPS-0800028-0810100014[1].pdf
- Link to PER
- lessons learned for crane event.htm
- PER 2008-0189 CCA Final.doc

Actionee	Action Due Date	E-STARS Number
Kramer, Tim F	01/27/2009	WRPS-PER-2008-0189.14

Action

Provide objective evidence that TFC-ENG-FACSUP-C-25, CH2M HILL Hoisting and Rigging, has been modified to reflect functional check criteria contained in Lessons Learned IB-08-048. (NOTE: This action is complete but is launched to gather objective evidence documentation).

Deliverable: A copy of TFC-ENG-FACSUP-C-25, CH2M HILL Hoisting and Rigging, modified to reflect functional check criteria contained in Lessons Learned IB-08-048.

Corrective Action Attachments

- 2008-0189.5-AEI-22337-OC-08-011 (HR Requirements) 12-18-08.pdf
- 2008-0189.5-AEI-22337-OC-08-011 Response.pdf
- 2008-0189.6-ADCA TFC-OPS-OPER-C-14.pdf
- Causal Team Charter WRPS-0800028-0810100014[1].pdf
- Link to PER
- PER 2008-0189 CCA Final.doc
- TFC-ENG-FACSUP-C-25,_Hoisting_and_Rigging.doc

Actionee	Action Due Date	E-STARS Number
Kramer, Tim F	01/27/2009	WRPS-PER-2008-0189.15

Action

Provide objective evidence that TFC-ENG-FACSUP-C-25 has been modified to require critical lift designations for lifts at or above 90% of crane load chart rating. (NOTE: This action is complete but is launched to gather objective evidence documentation).

Deliverable: A copy of TFC-ENG-FACSUP-C-25 modified to require critical lift designations for lifts at or above 90% of a crane load chart rating.

Corrective Action Attachments

- 2008-0189.5-AEI-22337-OC-08-011 (HR Requirements) 12-18-08.pdf
- 2008-0189.5-AEI-22337-OC-08-011 Response.pdf
- 2008-0189.6-ADCA TFC-OPS-OPER-C-14.pdf
- Causal Team Charter WRPS-0800028-0810100014[1].pdf
- Link to PER

- PER 2008-0189 CCA Final.doc
- TFC-ENG-FACSUP-C-25,_Hoisting_and_Rigging.doc

Actionee	Action Due Date	E-STARS Number
Kramer, Tim F	01/27/2009	WRPS-PER-2008-0189.16

Action

Provide objective evidence of the review of WRPS construction crane operator qualifications to assure compliance with provisions of DOE-RL-92-036, Hanford Site Hoisting and Rigging Manual. (NOTE: This action is complete but is launched to gather objective evidence documentation).

Deliverable: A copy of the completed review of crane operator qualifications.

Corrective Action Attachments

- 2008-0189.5-AEI-22337-OC-08-011 (HR Requirements) 12-18-08.pdf
- 2008-0189.5-AEI-22337-OC-08-011 Response.pdf
- 2008-0189.6-ADCA TFC-OPS-OPER-C-14.pdf
- Causal Team Charter WRPS-0800028-0810100014[1].pdf
- FW Mobile Crane Operator qualifications..rtf
- Link to PER
- PER 2008-0189 CCA Final.doc

Actionee	Action Due Date	E-STARS Number
Kramer, Tim F	01/27/2009	WRPS-PER-2008-0189.17

Action

Provide objective evidence that subcontractor crane operators have been briefed on Load Moment Indicator (LMI) error codes and expected responses. (NOTE: This action is complete but is launched to gather objective evidence documentation).

Deliverable: A copy of the briefing materials and rosters of personnel.

Corrective Action Attachments

- 2008-0189.5-AEI-22337-OC-08-011 (HR Requirements) 12-18-08.pdf
- 2008-0189.5-AEI-22337-OC-08-011 Response.pdf
- 2008-0189.6-ADCA TFC-OPS-OPER-C-14.pdf
- Causal Team Charter WRPS-0800028-0810100014[1].pdf
- CCR-LMI Codes Limits.pdf
- Link to PER
- Operating Errors.pdf
- PER 2008-0189 CCA Final.doc

Actionee	Action Due Date	E-STARS Number
Kramer, Tim F	01/27/2009	WRPS-PER-2008-0189.18

Action

Provide objective evidence that TFC-ENG-FACSUP-C-25, CH2M HILL Hoisting and Rigging, was modified to require that any reconfiguration of a crane (e.g., installation or removal of a jib, re-reeving wire rope, removing load block/hook or headache ball, etc.) be overseen be a designated representative of the equipment custodial company/organization. (NOTE: This action is complete but is launched to gather objective evidence documentation).

Deliverable: A copy of TFC-ENG-FACSUP-C-25, CH2M HILL Hoisting and Rigging, modified to require that any reconfiguraiton of a crane (e.g., installation or removal of a jib, re-reeving wire rope, removing load block/hook or headache ball, etc.) be overseen by a designated representative of the equipment custodial company/organization.

Corrective Action Attachments

- 2008-0189.5-AEI-22337-OC-08-011 (HR Requirements) 12-18-08.pdf
- 2008-0189.5-AEI-22337-OC-08-011 Response.pdf
- 2008-0189.6-ADCA TFC-OPS-OPER-C-14.pdf
- C-25reconADCA.xdf
- Causal Team Charter WRPS-0800028-0810100014[1].pdf
- Link to PER
- PER 2008-0189 CCA Final.doc
- TFC-ENG-FACSUP-C-25,_Hoisting_and_Rigging.doc

Actionee	Action Due Date	E-STARS Number
Kramer, Tim F	01/27/2009	WRPS-PER-2008-0189.19

Action

Provide objective evidence that a change to TFC-OPS-OPER-C-10, Vehicle and Dome Load Control in Tank Farm Facilities, to define minimum criteria for crane configuration and movement while in tank farm facilities, specifically addressing minimum number of spotters, tie-down length, and crane configuration, was initiated. (NOTE: This action is complete but is launched to gather objective evidence documentation).

Deliverable: A copy of the ADCA to modify TFC-OPS-OPER-C-10, Vehicle and Dome Load Controls in Tank Farm Facilities, to define minimum criteria for crane configuration and movement while in tank farm facilities, specifically addressing minimum number of spotters, tie-down length, and crane configuration.

Corrective Action Attachments

- 2008-0189.5-AEI-22337-OC-08-011 (HR Requirements) 12-18-08.pdf
- 2008-0189.5-AEI-22337-OC-08-011 Response.pdf
- 2008-0189.6-ADCA TFC-OPS-OPER-C-14.pdf
- C-10-ADCA.pdf
- Causal Team Charter WRPS-0800028-0810100014[1].pdf
- Link to PER
- PER 2008-0189 CCA Final.doc

Actionee	Action Due Date	E-STARS Number
Brown, Robert L	01/27/2009	WRPS-PER-2008-0189.20

Action

Provide objective evidence of an authorization basis review of the potential impact on TOC SMPs relative to the slip stick phenomenon. (NOTE: This action is complete but is launched to gather objective evidence documentation).

Deliverable: Documentation of determination by NS&L.

Corrective Action Attachments

- 2008-0189.5-AEI-22337-OC-08-011 (HR Requirements) 12-18-08.pdf
- 2008-0189.5-AEI-22337-OC-08-011 Response.pdf
- 2008-0189.6-ADCA TFC-OPS-OPER-C-14.pdf
- Causal Team Charter WRPS-0800028-0810100014[1].pdf
- FW Grove Crane Presentation.htm
- Link to PER
- PER 2008-0189 CCA Final.doc

ATTACHMENTS

2008-0189.5-AEI-22337-OC-08-011 (HR Requirements) 12-18-08.pdf

2008-0189.5-AEI-22337-OC-08-011 Response.pdf

2008-0189.6-ADCA TFC-OPS-OPER-C-14.pdf

Causal Team Charter WRPS-0800028-0810100014[1].pdf

Link to PER

PER 2008-0189 CCA Final.doc

AUDIT HISTORY

Change Date	Auditor	Comments
11/10/2008 08:48	Owen, Annette	Responsible Manager Task Launched by Owen, Annette
11/25/2008 09:27	Steelman, Tracy L	'Assigned Responsible Manager' was changed.
01/16/2009 11:18	Anderson, Craig E	PAAA Screening Changed PAAA Screening Comments Changed PAAA Codes Changed PAAA Function Codes Changed
01/16/2009 11:37	Anderson, Craig E	PAAA Codes Changed PAAA Function Codes Changed
01/19/2009 13:13	Anderson, Craig E	PAAA Screening Changed
01/19/2009 14:13	Brown, Nancy L	'PER Significance Level' was changed from PER with Resolution to Significant. 'PER Screening Comments' was changed.
01/20/2009 09:03	Owen, Annette	'TF Operations Morning Leadership Call' was changed. 'Instructions for Responsible Manager' was changed.
01/22/2009 11:43	Steelman, Tracy L	Corrective actions Launched by Steelman, Tracy L
03/04/2009 11:46	Owen, Annette	Change to Cause Analysis screen/Corrective Action plan.
03/10/2009 09:05	Steelman, Tracy L	Change to Cause Analysis screen/Corrective Action plan.
03/10/2009 09:05	Steelman, Tracy L	Corrective Action item - modification to synchronize with E-

		STARS.'Action Due Date' was changed.
03/10/2009 09:06	Steelman, Tracy L	Change to Cause Analysis screen/Corrective Action plan.
03/10/2009 09:06	Steelman, Tracy L	Corrective Action item - modification to synchronize with E-STARS.'Action' was changed.
03/13/2009 09:30	Steelman, Tracy L	Change to Cause Analysis screen/Corrective Action plan.
03/13/2009 09:31	Steelman, Tracy L	Corrective Action item - modification to synchronize with E-STARS.'Action Due Date' was changed. Corrective Action item - modification to synchronize with E-STARS.'Action' was changed.
03/24/2009 13:31	Steelman, Tracy L	Change to Cause Analysis screen/Corrective Action plan.
03/24/2009 13:32	Steelman, Tracy L	Corrective Action item - modification to synchronize with E-STARS.'Action Due Date' was changed. Corrective Action item - modification to synchronize with E-STARS.'Action' was changed.
05/22/2009 14:00	Steelman, Tracy L	Change to Cause Analysis screen/Corrective Action plan.
05/22/2009 14:01	Steelman, Tracy L	Corrective Action item - modification to synchronize with E-STARS.'Action Due Date' was changed. Corrective Action item - modification to synchronize with E-STARS.'Action' was changed.
06/19/2009 14:47	Steelman, Tracy L	Change to Cause Analysis screen/Corrective Action plan.
06/19/2009 14:48	Steelman, Tracy L	Corrective Action item - modification to synchronize with E-STARS.'Action Due Date' was changed. Corrective Action item - modification to synchronize with E-STARS.'Action' was changed.

-- End of Report --
07/08/2009 01:16 PM

Task# WRPS-PER-2008-0189

E-STARS[R] Report
Task Detail Report
07/08/2009 1317

TASK INFORMATION			
Task#	WRPS-PER-2008-0189		
Subject	SIG; A potential adverse trend is crane operations has been observed.		
Parent Task#		**Status**	Open
Reference		**Due**	04/07/2010
Originator	^PER Coordinator	**Priority**	Medium
Originator Phone		**Category**	PER
Origination Date	11/05/2008 1819	**Generic1**	None
Remote Task#		**Generic2**	None
Deliverable	PER Review	**Generic3**	None
Class	None	**View Permissions**	Global
Instructions	*No Instructions*		

ROUTING LISTS

1	Corrective actions Routing Lis	Active
	To launch Corrective actions.	
	• ^PER CAs - Assign - Awaiting Response - Due Date - 04/03/2010 0000 *Instructions:*	
2	Responsible Manager	Inactive
	Perform RCA & CAP with End Point Assessment Criteria in accordance with TFC-ESHQ-Q_C-C-01, PER & TFC-ESHQ-Q_ADM-C-11, Root & Common Cause Analysis & Corrective Action Planning. 'Save' Causal tab on PER. Ensure PER is on ESRB agenda.	
	• Calderon, Linda M - Assign - Decline (Withdrawn) - 01/19/2009 0916 *Instructions:*	
	• Calderon, Linda M - Assign - Withdrawn - 01/19/2009 0916 *Instructions:* Did you contact the originator about the PER? Document your contact in the response window.	
	• ^PER Screening(Brown, Nancy L) - Assign - Completed - 01/19/2009 1413 *Instructions:*	
	• ^Mgr Review(Owen, Annette) - Review - Concur - 01/20/2009 0903 *Instructions:*	
	• Gaydosh, William L - Assign - Completed with comments - 01/22/2009 1138 *Instructions:*	
3	Review Initial PER	Inactive
	Review New PER	
	• ^SO(Strasser, David W) - Review - Concur - 11/06/2008 1101 *Instructions:*	
	• ^PER Screening(Brown, Nancy L) - Review - Concur - 11/07/2008 1446 *Instructions:*	
	• ^Mgr Review(Owen, Annette) - Review - Concur - 11/10/2008 0848 *Instructions:*	

ATTACHMENTS

Task# WRPS-PER-2008-0189

Attachments	1. 2008-0189.5-AEI-22337-OC-08-011 (HR Requirements) 12-18-08.pdf 2. 2008-0189.5-AEI-22337-OC-08-011 Response.pdf 3. 2008-0189.6-ADCA TFC-OPS-OPER-C-14.pdf 4. Causal Team Charter WRPS-0800028-0810100014[1].pdf 5. Link to PER 6. PER 2008-0189 CCA Final.doc

COMMENTS

Poster	^PER Coordinator (Owen, Annette) - 12/19/2008 0858
	Extend to 2/23/09 per form A-6003-227.
	Additional time is needed for ESRB review and finalization of report. Tami Bowman for Linda Calderon
Poster	Calderon, Linda M - 01/16/2009 1222
	Rescreen this PER to ASignifican PER and reassign to Bill Gaydosh
Poster	Calderon, Linda M - 01/19/2009 0911
	Decline
	Rescreen to SigPer and assign to Bill gaydosh as instructed by the ESRB
Poster	Gaydosh, William L (Bowman, Tami A) - 01/22/2009 1138
	Completed
	Corrective actions ready for launch. Bowman/Gaydosh 01/22/09
Poster	^PER Coordinator (Steelman, Tracy L) - 05/22/2009 1401
	Due Date Extension
	Corrective Action item - modification to synchronize with E-STARS.'Action Due Date' was changed. Corrective Action item - modification to synchronize with E-STARS.'Action' was changed.
Poster	^PER Coordinator (Steelman, Tracy L) - 06/19/2009 1448
	Due Date Extension
	Corrective Action item - modification to synchronize with E-STARS.'Action Due Date' was changed. Corrective Action item - modification to synchronize with E-STARS.'Action' was changed.

TASK DUE DATE HISTORY

Modified	06/19/2009 1448 - ^PER Coordinator	**New Due Date**	04/07/2010 0000
Modified	05/22/2009 1401 - ^PER Coordinator	**New Due Date**	12/29/2009 0000
Modified	01/22/2009 1143 - ^PER Coordinator	**New Due Date**	10/25/2009 0000
Modified	01/20/2009 0904 - ^PER Coordinator (Owen, Annette)	**New Due Date**	02/19/2009 1630
Modified	12/19/2008 0857 - ^PER Coordinator (Owen, Annette)	**New Due Date**	02/23/2009 1630
Modified	11/10/2008 0848 - ^PER Coordinator	**New Due Date**	12/20/2008 1630
Modified	11/05/2008 1819 - ^PER Coordinator	**New Due Date**	11/07/2008 1630

SUB TASK HISTORY

Subtask#	WRPS-PER-2008-0189.1
Subject	RES; A potential adverse trend is crane operations has been observed.

Task# WRPS-PER-2008-0189

Originator	Calderon, Linda M				
	Routing List	*No Active Routing List*			
Subtask#	WRPS-PER-2008-0189.2				
Subject	WRPS-PER-2008-0189; SIG; CC-CA-01: Modify TFC-PLN-40, Hoisting and Rigging Safety Management Program Plan, and appropriate flow down procedures to ad				
Originator	^PER CAs				
	Routing List	*No Active Routing List*			
Subtask#	WRPS-PER-2008-0189.3				
Subject	WRPS-PER-2008-0189; SIG; CC-CA-02: Perform a documented review of all current contracts for subcontractors performing field work (beyond walk downs a				
Originator	^PER CAs				
	Routing List	*No Active Routing List*			
Subtask#	WRPS-PER-2008-0189.4				
Subject	WRPS-PER-2008-0189; SIG; CC-CA-03: Revise TFC-BSM-TQ-STD-18, Hoisting and Rigging Training Program				
Originator	^PER CAs				
	Routing List	Corrective Action			
		Assignee	Kramer, Tim F	**Response**	
		Assignee	Gaydosh, William L	**Response**	
Subtask#	WRPS-PER-2008-0189.5				
Subject	WRPS-PER-2008-0189; SIG; CC-CA-04: Formally communicate to all subcontractors with existing contracts for performing crane operations in tank farms o				
Originator	^PER CAs				
	Routing List	*No Active Routing List*			
Subtask#	WRPS-PER-2008-0189.6				
Subject	WRPS-PER-2008-0189; SIG; CC-CA-05: Modify TFC-OPS-OPER-C-14, Event Investigation Process, section 4.2, Conduct a Fact-Finding, to include involvement				
Originator	^PER CAs				
	Routing List	*No Active Routing List*			
Subtask#	WRPS-PER-2008-0189.7				
Subject	WRPS-PER-2008-0189; SIG; CC-CA-06: Revise TF-AOP-020, Response for Placing Personnel and Equipment in a Safe Condition, section 2.0 to clearly addres				
Originator	^PER CAs				
	Routing List	*No Active Routing List*			
Subtask#	WRPS-PER-2008-0189.8				
Subject	WRPS-PER-2008-0189; SIG; CC-CA-07: Update Tank Farms Orientation, course number 350761, to reflect modifications to TF-AOP-020. Deliverable: Chan				
Originator	^PER CAs				
	Routing List	*No Active Routing List*			
Subtask#	WRPS-PER-2008-0189.9				
Subject	WRPS-PER-2008-0189; SIG; CC-CA-08: Provide and document briefings for FWS, SSW, and Shift Manager qualified staff on changes made to TF-AOP-020, Resp				

Task# WRPS-PER-2008-0189

Originator	^PER CAs				
	Routing List	*No Active Routing List*			
Subtask#	WRPS-PER-2008-0189.10				
Subject	WRPS-PER-2008-0189; Sig; CC-CA-09: Modify TFC-ESHQ-Q_C-C-01, Problem Evaluation Request, section 4.				
Originator	^PER CAs				
	Routing List	*No Active Routing List*			
Subtask#	WRPS-PER-2008-0189.11				
Subject	WRPS-PER-2008-0189; SIG; CC-CA-10: SMP SME for hoisting and rigging review FH managment assessment				
Originator	^PER CAs				
	Routing List	Corrective Action			
		Assignee	Kramer, Tim F	**Response**	
		Assignee	Gaydosh, William L	**Response**	
Subtask#	WRPS-PER-2008-0189.12				
Subject	WRPS-PER-2008-0189; SIG; EPA-01: Perform and end point assessment of the corrective actions identif				
Originator	^PER CAs				
	Routing List	Corrective Action			
		Assignee	Maciuca, Tino	**Response**	
		Assignee	Gaydosh, William L	**Response**	
Subtask#	WRPS-PER-2008-0189.13				
Subject	WRPS-PER-2008-0189; SIG; Provide objective evidence that Lessons Learned IB-08-048, Clarification of Expectation for Crane Functional Check, was issue				
Originator	^PER CAs				
	Routing List	*No Active Routing List*			
Subtask#	WRPS-PER-2008-0189.14				
Subject	WRPS-PER-2008-0189; SIG; Provide objective evidence that TFC-ENG-FACSUP-C-25, CH2M HILL Hoisting and Rigging, has been modified to reflect functional				
Originator	^PER CAs				
	Routing List	*No Active Routing List*			
Subtask#	WRPS-PER-2008-0189.15				
Subject	WRPS-PER-2008-0189; SIG; Provide objective evidence that TFC-ENG-FACSUP-C-25 has been modified to require critical lift designations for lifts at or a				
Originator	^PER CAs				
	Routing List	*No Active Routing List*			
Subtask#	WRPS-PER-2008-0189.16				
Subject	WRPS-PER-2008-0189; SIG; Provide objective evidence of the review of WRPS construction crane operator qualifications to assure compliance with provisi				
Originator	^PER CAs				
	Routing List	*No Active Routing List*			

Task# WRPS-PER-2008-0189

Subtask#	WRPS-PER-2008-0189.17	
Subject	WRPS-PER-2008-0189; SIG; Provide objective evidence that subcontractor crane operators have been briefed on Load Moment Indicator (LMI) error codes an	
Originator	^PER CAs	
	Routing List	*No Active Routing List*
Subtask#	WRPS-PER-2008-0189.18	
Subject	WRPS-PER-2008-0189; SIG; Provide objective evidence that TFC-ENG-FACSUP-C-25, CH2M HILL Hoisting and Rigging, was modified to require that any reconfi	
Originator	^PER CAs	
	Routing List	*No Active Routing List*
Subtask#	WRPS-PER-2008-0189.19	
Subject	WRPS-PER-2008-0189; SIG; Provide objective evidence that a change to TFC-OPS-OPER-C-10, Vehicle and Dome Load Control in Tank Farm Facilities, to defi	
Originator	^PER CAs	
	Routing List	*No Active Routing List*
Subtask#	WRPS-PER-2008-0189.20	
Subject	WRPS-PER-2008-0189; SIG; Provide objective evidence of an authorization basis review of the potential impact on TOC SMPs relative to the slip stick ph	
Originator	^PER CAs	
	Routing List	*No Active Routing List*

-- end of report --

washington river protection solutions

PO Box 850
Richland, WA 99352

December 18, 2008

AEI-22337-OC-09-011

Mr. Joe Gonzalez
American Electric, Inc.
1999 Butler Loop
Richland, Washington 99352

Dear Mr. Gonzalez:

Washington River Protection Solutions LLC (WRPS) Construction and Commissioning is requiring that the enclosures on hoisting and rigging training materials be discussed and copies given to all crane operators (all subcontracts) performing or supporting WRPS Tank Farms' construction activities.

Also enclosed for review and discussion is the revision to WRPS procedure TFC-ENG-FACSUP-C-25, Rev: B-4, *Hoisting and Rigging*. The summary of changes is as follows:

- Added a step to section 4.0 to help ensure mobile operations are performed safely.
- Deleted a step from section 4.1 that required additional signatures.
- Added a step to section 4.1 to provide direction on revision requirements for special lists.
- Inserted new item 9 to section 4.1 to ensure safe crane operations when the load is 90% or more of the rated crane capacity.
- Deleted section 4.2.b because there are no significant facility worker hazards.
- Added section 4.2.e to ensure safe crane operations when load capacity is 90% or more of crane capacity.
- Removed note from section 4.2 which no longer applies.
- Updated organizational names.

American Electric, Inc. is required to submit electronic documentation to Ms. Barbara Dougherty (Barbara_A_Dougherty@rl.gov) and Ms. Robin Boasen (Robin_L_Boasen@rl.gov) no later than January 9, 2008, that the actions listed above have been completed.

You may contact me at 372-9249 with any questions regarding this matter.

Sincerely,

Karen F. Lesko
Construction and Commissioning Manager

KFL:RLB

Enclosures:
1. 7-GN-068, Crane & Rigging Services Maintenance Procedure *Monthly Mobile Crane Inspections*
2. 7-GN-097, Crane & Rigging Services Maintenance Procedure *Frequent Inspection of Mobile Cranes*
3. 7-GN-179, Crane & Rigging Services Maintenance Procedure *Annual Mobile Crane Inspections*
4. Crane Pool Annual Mobile Crane Inspection
5. Mobile Crane rental Fleet
6. Operating Errors
7. TFC-ENG-FACSUP-C-25, Hoisting and Rigging

cc: B. Dowell, AEI

R. E. Butler, URS
B. Dougherty, URS
M. Farner, URS
L. Fuller, URS
N. Kerr, URS
K. Leliefeld, URS
D. Moore, URS
D. A. Nixie, URS
J. Stredwick, URS

WRPS Construction Document Control
L. B. Atkins
G. R. Beaumier
G. P. Hopkins
T. F. Kramer
J. M. Luchi
M. J. Powers
R. C. Sheehy

Enclosure 1

7-GN-068, CRANE AND RIGGING SERVICES MAINTENANCE PROCEDURE, *MONTHLY MOBILE CRANE INSPECTIONS*

Consisting of 38 pages, including coversheet

CONTINUOUS USE

CRANE & RIGGING SERVICES

MAINTENANCE PROCEDURE

MONTHLY MOBILE CRANE INSPECTIONS

7-GN-068

Revision 10
Change 0

Prepared By:	D. G. Fortune, Sr Technical Writer, CS&I
Validated/Reviewed By:	D. L. Morgan, Operations Specialist, Crane & Rigging Services
Reviewed/Approved By:	R. J. Gillespie, Crane & Rigging Services
Reviewed/Approved By:	R. S. Spaniel, Safety Engineer, CS&I
Reviewed/Approved By:	C. E. Brewer, Operations Specialist, Crane & Rigging Services

Approval By:	Approval Signature Obtained	12/3/08
	C. E. Brewer, Operations Specialist, Crane & Rigging Services	Date
Final Approval By:	Approval Signature Obtained	12/3/08
	S. M. Holloman, Manager, Site Crane and Rigging Services	Date
Released By:	Release Signature Obtained	12/4/08
	D. G. Fortune, Procedure Coordinator, CS&I	Date

Signatures of approval authority are recorded in this procedure's record file.

REVISION STATUS

Rev/Chg Level	Date	Change Document	Page/s	Description
Rev 10 Chg 0	12/3/08	N/A		Renamed procedure to reflect change in scope to monthly inspection of crane.

TABLE OF CONTENTS

1.0 PURPOSE AND SCOPE 4
2.0 REFERENCES 4
3.0 PERSONNEL REQUIREMENTS 4
4.0 PRECAUTIONS AND LIMITATIONS 5
5.0 SPECIAL TOOLS, EQUIPMENT, AND MATERIALS 6
6.0 PREREQUISITES 7
7.0 INSTRUCTIONS 8
7.1 Inspection Site 8
7.2 Conduct Walk-Around Inspection 8
7.3 Conduct Machinery House Inspection 10
7.4 Conduct Operator Cab Inspection 12
7.5 Conduct Operational Inspection 13
7.6 Conduct Vehicle/Truck Inspection 13
7.7 Hook Inspection 14
7.8 Wire Rope Inspection 16
7.9 Wire Rope Replacement 17
8.0 RESTORATION 19
9.0 TESTING AND ACCEPTANCE 19
9.1 Load Tests 19
10.0 DISPOSITION 19
11.0 BIBLIOGRAPHY 20
ATTACHMENT 1 – SAMPLE WARNING TAG 21
ATTACHMENT 2 – SAMPLE DUE DATE STICKER 22
APPENDIX 1 – WIRE ROPE ACCEPTANCE CRITERIA 23
APPENDIX 2 – SHANK HOOK 24
APPENDIX 3 – TORQUE VALUE CHARTS 25
APPENDIX 4 – TORQUE VALUE CHARTS 26
APPENDIX 5 – SAFETY INFORMATION 27
DATA SHEET 31

1.0 PURPOSE AND SCOPE

This procedure will establish a sequence of steps to perform inspections of wire rope, brakes, crane hooks, hydraulic and pneumatic cylinders, hydraulic and pneumatic relief pressure valves, and other inspections required in this procedure.

The inspections are performed on a monthly basis.

Mobile cranes with noted documented deficiencies requiring repairs shall be tagged according to this procedure. Documented deficiency shall be defined as safety significant item(s) the mobile crane inspector considers having an impact and creating an unsafe condition if the crane continues to operate.

Applicable inspection listed shall comply with the requirements of DOE-RL-92-36, *Hanford Site Hoisting and Rigging Manual* and ASME B30.5.

2.0 REFERENCES

None

3.0 PERSONNEL REQUIREMENTS

3.1 Qualified Mobile Crane Inspector

3.2 Supervisor or manager, Hoisting and Rigging Operations

3.3 Equipment Custodian

3.4 Supervisor or manager, Inspection, Maintenance, and Repair

3.5 Designated Leader

3.6 Fleet maintenance shop

3.7 Rigger

3.8 Crane Operator

3.9 Truck driver, as required

3.10 QWRI (Qualified Wire Rope Inspector)

4.0 PRECAUTIONS AND LIMITATIONS

4.1 If during performance of this procedure, any of the following conditions are found, **immediately** stop work, place equipment in a safe condition, and notify Supervision:

- Any equipment malfunction which could prevent fulfillment of its functional requirements.
- Personnel error or procedural inadequacy which could prevent fulfillment of procedural requirements.

4.2 Contact Supervision for additional instructions if changing plant conditions affect work or delays in work extend past end of shift.

4.3 Comply with Company and plant/facility specific lock and tag or over-tagging requirements, as applicable. Refer to Work Package for specific lock and tag instructions.

4.4 If performance of any step(s) in this procedure is not required for procedure completion, steps not performed shall be indicated as such by entering "N/A" in appropriate Data Sheet signoff space.

4.5 Observe safety rules for operators in accordance with DOE-RL-92-36, *Hanford Site Hoisting and Rigging Manual* Section 4.0 "Personnel Qualifications and Training Requirements."

4.6 If the mobile crane is a regulated piece of equipment, contact HPT prior to start of work. A personal survey is required at the completion of work.

5.0 SPECIAL TOOLS, EQUIPMENT, AND MATERIALS

NOTES

Measuring and Test Equipment (M&TE) used to collect qualitative data during performance of this procedure shall meet the following requirements:

- Be within its current calibration cycle as evidenced by an affixed calibration label.
- Be capable of desired range.
- Have an accuracy consistent with state-of-the-art limitations:
  - equal to or greater than input tolerance specified on Data Sheet,
  - **OR**, if device being calibrated is not recall related, at least 4 times greater than specified device tolerance.

- Sheave gauges
- Caliper (for hook inspection). Dial indicating or digital type shall be graduated in .001" increments. Those without dials shall be measured along a rule
- Torque wrench (range capable of required bolt torque)
- Measuring tape (rule), minimum graduations = 1/32"
- Personal Protective Equipment, including leather gloves
- Wire rope lubricant
- Flashlight

6.0 PREREQUISITES

NOTES

- The Equipment Custodian shall provide a careful evaluation and determine the corrective action to be taken. The responsible Site Crane and Rigging Services Manager may place a crane into service that has a noted deficiency, providing it does not constitute a safety hazard or regulatory requirement.
- Completed, documented inspection shall be performed monthly (depending upon crane activity, severity of service, and environment).

6.1 Obtain release from Operations management prior to beginning performance of this instruction.

6.2 Deficiencies found during a monthly inspection shall be reported to your immediate supervisor who shall contact the Equipment Custodian.

6.3 Cranes identified with safety significant item(s) shall be tagged with a "WARNING" tag, by the mobile crane inspector, equipment custodian or supervisor. Reference page 23 for example. The warning tag must have a legibly written description of the item(s) found deficient and be signed and dated by mobile crane inspector, equipment custodian or supervisor. The tag shall be secured to the crane steering wheel located in the operators' crane cab on a rough terrain or the controls on a crawler-mounted crane, and the driver's cab steering wheel of a truck-mounted crane. Immediately report the deficiency to your supervisor, who shall then report it to the Equipment Custodian. The Equipment Custodian shall make all the necessary contacts to the fleet maintenance shop in reporting and tracking repairs. When deficiencies are found that impair the safe operation of the crane, the Equipment Custodian shall contact the Fleet Maintenance shop for determination on the operability of the crane, i.e., "Is it safe to operate or transport the crane under its own power or if it needs transported by tractor and trailer back to the shop, or do the repairs need to be made in the field?" Once a repair is completed all effort shall be made to have the mobile crane inspector remove the "WARNING" tag to assure the deficiency was fixed to his satisfaction. If the mobile crane inspector cannot be contacted the equipment custodian or supervisor may remove the "WARNING tag".

6.4 Copies of monthly inspection procedure shall be made available for use and can be obtained from your immediate supervisor or the Equipment Custodian.

6.5 The Supervisor shall be responsible to ensure all inspections are performed and appropriate documentation is completed.

6.6 Inspection site should be level and free of ice, water, or overhead wires, in a suitable area capable of performing all mechanical functions in a safe manner.

6.7 Copies of PM data sheet(s) shall be obtained by the Equipment Custodian and kept in the crane maintenance files. VFM job cards shall be kept by fleet Maintenance Shop.

7.0 INSTRUCTIONS

NOTES

- A completed, documented inspection shall be performed (reference attached inspection report) by the qualified inspector(s).
- Carrier portion of monthly inspections and other cranes that require a driver to make carrier inspections shall be signed by the driver.
- Monthly inspections shall be filled out as appropriate, signed, dated and returned to the Supervisor. Any maintenance or repair shall be noted on the inspection procedure.
- The responsible Site Crane and Rigging Services Manager can put into service a crane that has a noted deficiency, provided a careful evaluation does not constitute a safety hazard or regulatory requirement.

7.1 Inspection Site

7.1.1 CHOOSE suitable site **AND** PREPARE crane for inspection.

7.2 Conduct Walk-Around Inspection

7.2.1 CHECK proper installation of safety guards and mats.

7.2.2 CHECK carrier frame and rotating base for structural defects, cracks, bent braces, loose bolts, etc.

7.2.3 NOTE condition of installed general hardware for bends, cracks, or loose bolts.

NOTE

Use sheave gauges to check sheaves for excessive wear.

7.2.4 CHECK condition of:

A. Main hook block. RECORD weight and capacity on Data Sheet.

B. Auxiliary hook ball. RECORD weight and capacity on Data Sheet.

C. Hook block and auxiliary hook ball tie-back slings and shackles. Only synthetic or wire rope slings shall be used for this purpose. Each sling shall be marked with similar wording, "Used for hook tie-back only, not to be used for overhead lifting". Inspect these tie-back slings for the out-of-service criteria as defined in the Hanford Site Hoisting and Rigging Manual, Chapter 9.0, "Slings". Also check the shackles used to secure the tie-back slings, reference chapter 10.0 "Rigging Hardware". RECORD condition on Data Sheet.

D. Check the hook tie-back mounting brackets on the crane used as the anchorage points for the hook tie-back slings for the following conditions. RECORD condition on Data Sheet.

1. NOTE any deformed, cracked, or corroded members and welded areas.
2. CHECK for loose, damaged, or missing bolts, rivets, nuts, pins, etc.
3. INSPECT (visually) all load and hook eyes for damage, corrosion, deformation, cracks, excessive wear, and signs of over-stressing.

NOTE

All hook and ball assemblies and load blocks shall be labeled with their rated capacity and weight. (Reference DOE-RL-92-36, Chapter 14.6.4 "Mobile Cranes")

7.2.5 NOTE condition of boom and jib.

7.2.6 CHECK gantry, pendants, boom stops.

7.2.7 NOTE condition of walkways, ladders, handrails.

7.2.8 CHECK tires, wheels, tracks.

7.2.9 NOTE any fuel line, lubricant, hydraulic/pneumatic line/cylinder, water, fittings, pressure relief valve, etc. leaks.

7.2.10 CHECK boom length indicator for proper operation.

7.2.11 CHECK outriggers and locking devices.

7.2.12 CHECK steering control linkage for wear or loose nuts and bolts.

7.2.13 Ensure results of inspection are recorded on Data Sheets.

7.3 Conduct Machinery House Inspection

7.3.1 CHECK cleanliness, housekeeping of interior.

7.3.2 CHECK engine/compressor conditions.

A. NOTE any fuel, lubricant, or oil leaks.

B. CHECK condition of coolant (anti-freeze, water).

7.3.3 CHECK belts for wear and cracks.

7.3.4 MAKE note of Class "A" & Class "B" inspection due dates. When the Due date of the Class "A" expires the crane shall be tagged out of service until the Fleet maintenance shop completes the Class "A" inspection. The Class "B" inspection is lubrication, air filter inspection/change and oil/filter change, and the crane may used beyond the Due date, but should promptly be rescheduled for completion the next appropriate opportunity the Fleet Maintenance shop has open.

7.3.5 CHECK battery condition and cables.

7.3.6 CHECK all lights functional - interior and exterior.

7.3.7 CHECK condition of all glass/windows.

7.3.8 CHECK windshield wiper(s) for proper operation.

7.3.9 CHECK condition of clutch and brake linkages/linings.

7.3.10 NOTE condition of electric motors.

7.3.11 CHECK that all warning/instruction plates are properly installed. ALSO NOTE: Standard hand signals for controlling mobile crane operations shall be conspicuously posted on the crane. Electrical warning signs shall be installed at the Operator's station and on the outside of the crane, warning that electrocution or serious bodily injury may occur unless minimum clearances are maintained between the crane or load being handled and energized power lines as specified below:

TABLE 1: REQUIRED CLEARANCE FOR NORMAL VOLTAGE IN OPERATION NEAR HIGH VOLTAGE POWER LINES AND OPERATION IN TRANSIT WITH NO LOAD AND BOOM OR MAST LOWERED

Normal Voltage, kV (Phase to Phase)	Minimum Required Clearance, ft (m) [Note 1)]
Operation Near High Voltage Power Lines	
To 50	10 (3.05)
Over 50 to 200	15 (4.60)
Over 200 to 350	20 (6.10)
Over 350 to 500	25 (7.62)
Over 500 to 750	35 (10.67)
Over 750 to 1000	45 (13.72)
Operation in Transit With No Load and Boom or Mast Lowered	
To 0.75	4 (1.22)
Over 0.75 to 50	6 (1.83)
Over 50 to 345	10 (3.05)
Over 345 to 750	16 (4.87)
Over 750 to 1000	20 (6.10)

NOTE:

(1) Environmental conditions such as fog, smoke, or precipitation may require increased clearances.

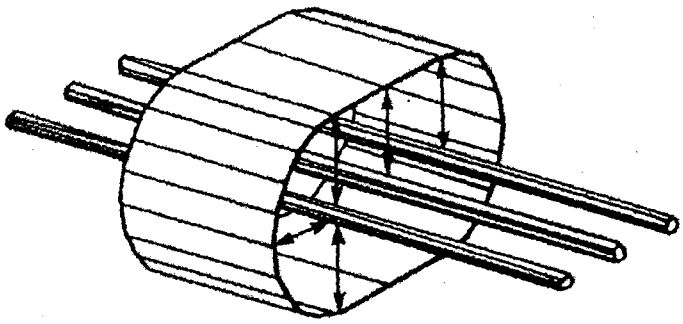

GENERAL NOTE: See Table 1 for minimum radial distance of prohibited zone.

7.3.12 CHECK **AND** ENSURE that fire extinguishers are in good condition, are a 10 BC, usable, and accessible.

7.3.13 Ensure results of inspection are recorded on Data Sheets.

7.4 Conduct Operator Cab Inspection

7.4.1 CHECK condition of all gauges.

7.4.2 CHECK for proper operation of warning/indicator lights.

7.4.3 CHECK condition of operator controls and brakes.

7.4.4 CHECK for adequate operator visibility.

7.4.5 CHECK that load rating charts are posted.

7.4.6 CHECK safety devices / Operator Aids / Load Moment Indicators (LMI) for functioning and accuracy

7.4.7 CHECK emergency stops in place and functioning.

7.4.8 CHECK list and trim indicators in place and functioning.

7.4.9 CHECK boom angle indicator in place and functioning.

7.4.10 CHECK that Operator's manual is in place.

7.4.11 Ensure results of inspection are recorded on Data Sheets.

7.5 Conduct Operational Inspection

7.5.1 NOTE condition of area safety.

7.5.2 START crane engine.

7.5.3 DEPLOY outriggers.

7.5.4 NOTE any unusual equipment noises.

7.5.5 NOTE action/operation of controls.

7.5.6 INSPECT brakes, boom, load handling, and rotating operations.

7.5.7 NOTE crane's stability.

7.5.8 INSPECT operation under no-load condition.

7.5.9 INSPECT floating sheave(s).

7.5.10 CHECK to ensure all limit switches / operator aides function properly.

7.5.11 Ensure results of inspection are recorded on Data Sheets.

7.6 Conduct Vehicle/Truck Inspection

7.6.1 NOTE tire condition (cuts, tread wear, etc.).

7.6.2 Brake operation.

7.6.3 CHECK operation of lights:

A. Headlights

1. High beam

2. Low beam

B. Tail lights

C. Stop lights

D. Turn signal lights

E. Back-up lights/warning beeper

7.6.4 CHECK horn operation.

7.6.5 CHECK windshield wiper operation.

7.6.6 CHECK mirrors are functional and in good condition.

7.6.7 CHECK heater/fan/air conditioner operation.

7.6.8 CHECK glass condition (NOTE all rock pits, cracks, etc.).

7.6.9 CHECK seat belt condition.

7.6.10 CHECK interior condition:

A. Cleanliness

B. Upholstery condition

C. Visors condition

7.6.11 Ensure results of inspection are recorded on Data Sheets.

7.7 Hook Inspection

NOTE

- The following instructions are for the inspection of hooks typically found attached to a crane, hoist or may be used as lift hooks attached to or used with a "Below-the-Hook Lifting Device".
- Cutting, bending, welding, painting, or heating of hooks shall not be permitted. Abrasive cleaning to aid in inspection is permitted in accordance with DOE-RL-92-36, Section 5.5.2.6. Hook repair by grinding may occur **ONLY** within limits specified in DOE-RL-92-36, Attachment 5.1, and be performed in accordance with Procedure 7-GN-137.

7.7.1 INSPECT (crane/hoist type) hook for the following conditions: RECORD results of inspection on Data Sheet.

A. Wear

B. Cracks

C. Corrosion

D. Condition of the hook latch

E. Deformation

7.7.2 RECORD caliper calibration data on Data Sheets pages 4 and 5.

NOTE

Local repair of hooks **SHALL NOT** be attempted.

7.7.3 REMOVE hook(s) from service for destruction or for return to manufacturer (for reworking to original specifications) if any of the following conditions exist. RECORD results of inspection on Hook Identification Record Data Sheet(s).

A. 5% increase in throat opening.

B. 10% wear of the original section dimension of the hook or its load pin or as otherwise directed by the hook manufacturer.

C. Any visible bending or twisting from the plane of the unbent hook.

D. Any visible crack.

E. Inability to lock. Any self-locking hook that does not lock.

F. Inoperative latch. Any latch that does not close the hook's throat.

NOTES

- **HOOKS IN NORMAL SERVICE DO NOT ROUTINELY REQUIRE NDT**. See DOE-RL-92-36, Section 5.0, para 5.5.2.1 and 5.5.2.2.
- Existing crane/hoist hooks with rated load greater than or equal to **10 TONS AND ASSIGNED TO HEAVY OR SEVERE SERVICE** shall receive an NDT by a qualified inspector at the following intervals:
  1. Heavy service – annually
  2. Severe service – semiannually (every 6 months)
- The type of NDE is dependent upon material from which the hook is fabricated. The report of hook inspection shall be recorded in writing on Data Sheet 2 and shall be placed in the equipment history file.

7.7.4 ENSURE hooks are qualified for service by verifying the following is present on the MAXIMO work task order.

A. Record of original hook measurements are used to compare existing hook measurements.

B. Record of previous monthly inspection is in package.

7.7.5 ENSURE discrepancies and actions taken are recorded in Attachments or Data Sheets, as applicable.

7.8 Wire Rope Inspection

NOTES

Only by inspection can the condition of wire rope be determined. Based on experience, and in accordance with wire rope inspection criteria, a Qualified Wire Rope Inspector (QWRI) shall determine the following:

- Does the wire rope's existing condition present the possibility of a failure?
- Is the rate of deterioration of the wire rope such that it will remain in safe condition until the next scheduled inspection?
- A visual inspection: For crawler locomotive and truck cranes, position the boom and load block(s) for good access to length(s) of running wire rope(s) that can reasonably be expected to be used in the existing boom/jib configuration. Hydraulic booms should be fully extended.

7.8.1 Monthly Inspection

A. INSPECT for:

1. Reduction of wire rope diameter as identified in **APPENDIX 1**
2. Loss of core support
3. Internal or external corrosion

B. INSPECT for loss of wire rope strength due to:

1. Number of broken outside wires and the degree of distribution or concentration of such broken wires
2. Worn outside wires
3. Corroded or broken wires at end connections
4. Corroded, cracked, bent, worn, or improperly applied end connections
5. Severe kinking, crushing, cutting, or unstranding

NOTE

Lubricant shall be applied when determined by the QWRI. Wire rope lubricant shall be compatible with the original lubricant or an approved equal by the Crane and Rigging Equipment Custodian.

C. INSPECT for improper or insufficient lubrication.

D. CHECK for evidence of heat damage from any source.

E. INSPECT (closely) the following areas of possible rapid deterioration:

1. Sections in contact with saddles, equalizer sheaves, or other sheaves where wire rope travel is limited.

2. Sections of the wire rope at or near terminal ends where corroded or broken wires may protrude.

7.8.2 REPLACE wire rope when the values in **APPENDIX 1** are reached or exceeded.

NOTE

When replacement of wire rope is performed, those activities required to be documented on the Wire Rope Replacement Checklist.

7.9 Wire Rope Replacement

7.9.1 INSTALL new wire rope (as required) in accordance with manufacturer's instructions and DOE-RL-92-36, Section 8.6 and 7.

7.9.2 LUBRICATE wire rope in accordance with manufacturer's instructions and DOE-RL-92-36, Section 8.5.4.2 and 3.

7.9.3 INSPECT (QWRI) replaced wire rope for the following prior to conducting initial load cycle:

A. The wire rope attachment points to the hoist drum and dead end are properly installed. See Appendix 3, 4 and 5.

B. Wire rope clips are properly torqued. See Appendix 3, 4 and 5.

C. Reeving is in accordance with the manufacturer's recommendations.

D. Replacement wire rope is the proper type in accordance with the manufacturer's recommendations, and the required wire rope manufacturer's certification is retained in the Equipment Maintenance File.

NOTE

After wire rope replacement, and before returning the equipment to service, the hoist unit shall be cycled eight to ten times with 10% to 20% of rated load. Cycle as much usable wire rope as crane configuration will allow.

7.9.4 PERFORM initial load cycle.

NOTES

A completed wire rope replacement checklist, signed and dated by QWRI, shall be placed in Crane Maintenance File. In addition to inspection records in Crane Maintenance File, replacement of wire rope shall have a signed certification from wire rope manufacturer. The manufacturer's certification shall contain:

1. Wire rope diameter.
2. Wire rope classification (number of strands, X wire per strand, e.g., 6X19).
3. Lay.
4. Grade of wire (e.g., Improved Plow Steel, Extra Improved Plow Steel).
5. Type of core.
6. Nominal breaking strength.
7. Wire rope purchase order number.

7.9.5 DOCUMENT wire rope replacement on Data Sheet/Wire Rope Replacement Record.

7.10 ENSURE all inspections and corrections are documented on attached Data Sheets.

Once completed, if the cranes monthly inspection is accepted the mobile crane inspector shall attach to the inside of the operators station an "Inspection Due Date Sticker". The previous month's sticker shall be removed and replaced with new. The mobile crane

inspector shall print the next inspection due date with **month & year** only and print his **name** clearly. This sticker informs the operator that the crane is within certification, or out of certification. The stickers will be issued to the qualified inspector each month and affixed to the preventative maintenance (PM) package. Additional stickers can be obtained from the mobile crane pool coordinator. See attachment 2 "Sample Due Date Sticker" page 24 of 41.

8.0 RESTORATION

Fleet Maintenance will restore the equipment to the original configuration as required.

9.0 TESTING AND ACCEPTANCE

NOTES

- Cranes shall be load tested prior to initial use or after load bearing parts have been altered, replaced, or repaired. **THE REPLACEMENT OF WIRE ROPE (LOAD LINES OR STATIC LINES) IS SPECIFICALLY EXCLUDED FROM THIS REQUIREMENT**. However, a functional test of the crane under a normal operating load shall be made before placing crane back in service.

9.1 Load Tests

9.1.1 Fleet Maintenance shall determine if load-sustaining parts have been altered, replaced, or repaired and a load test is required.

9.1.2 Load testing is required after repairs are made.

10.0 DISPOSITION

10.1 Report deficiencies or cause of early failure to your immediate supervisor who will contact the Equipment Custodian.

10.2 Send copy of completed inspection report to Equipment Custodian to be retained in Crane Maintenance File.

10.3 The documented deficiency data sheet(s) along with the VFM job card copy shall be kept in the Crane Maintenance File.

11.0 BIBLIOGRAPHY

- DOE-RL-92-36, *Hanford Site Hoisting and Rigging Manual*, Section 14.0, "Mobile Cranes."
- ANSI B30.5, *Mobile and Locomotive Cranes*
- 29 CFR 1910.180, *Crawler, Locomotive and Truck Cranes*
- ANSI, B30.10, *Hooks*

ATTACHMENT 1 – SAMPLE WARNING TAG

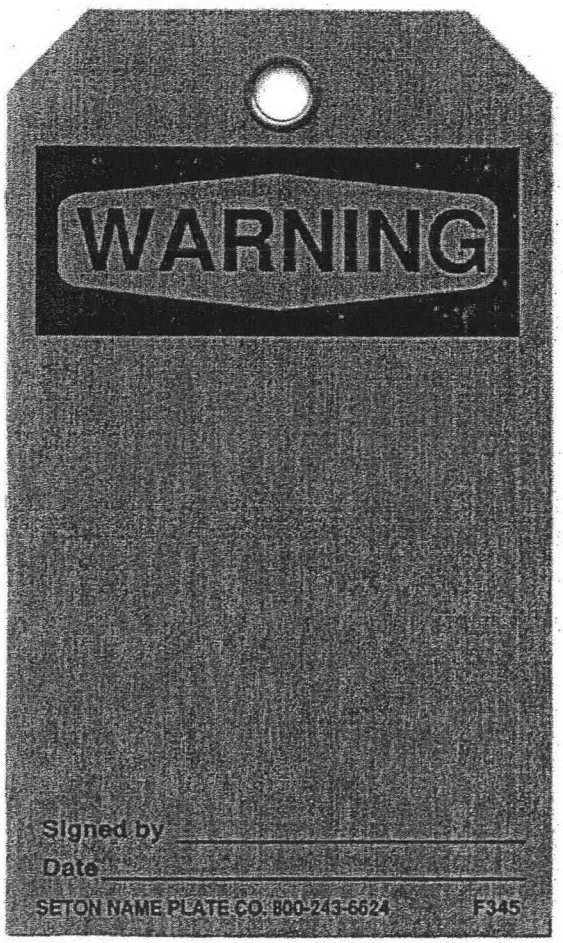

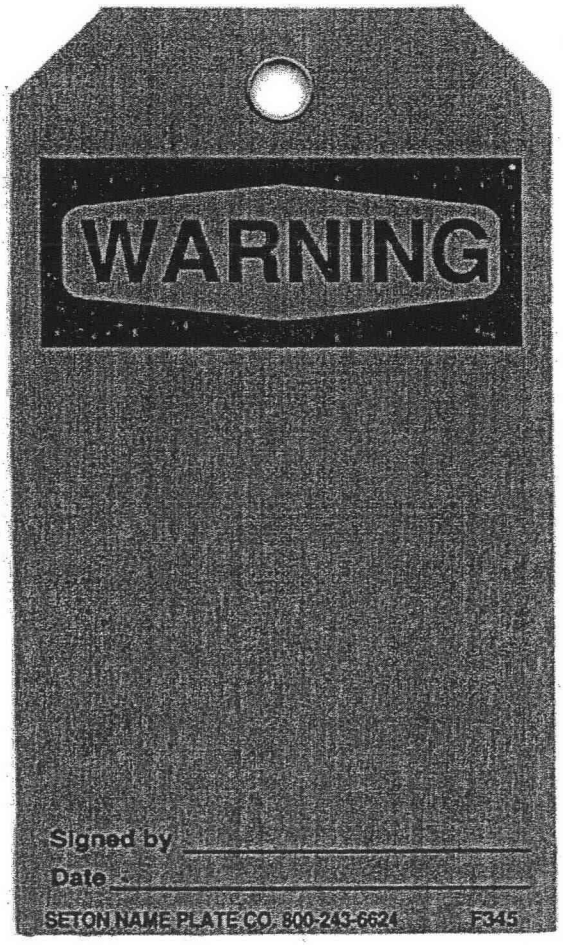

ATTACHMENT 2 – SAMPLE DUE DATE STICKER

Crane Pool

Monthly Mobile Crane Inspection
Procedure 7-GN-068/ASME B30.5

Inspection Due Date: _____/_____
Month Year

Qualified Inspection: _____

APPENDIX 1 – WIRE ROPE ACCEPTANCE CRITERIA

The following criteria determine when a wire rope is no longer acceptable for service:

1. In running wire ropes, six randomly distributed broken wires in one lay or three broken wires in one strand in one lay. In rotation resistant wire ropes, two randomly distributed broken wires in six wire rope diameters or four randomly distributed broken wires in thirty wire rope diameters."

2. One outer wire broken at the point of contact with the core of the wire rope which has worked its way out of the wire rope structure and protrudes or loops out from the wire rope structure. Additional inspection of this section is required.

3. Wear of one-third the original diameter of outside individual wires.

4. Kinking, crushing, birdcaging, or any other damage resulting in distortion of the wire rope structure.

5. Evidence of any heat damage from any cause.

6. Reduction from nominal diameter of more than

   a. 1/64 inch for diameters to and including 5/16 inch

   b. 1/32 inch for diameters 3/8 inch to and including 1/2 inch

   c. 3/64 inch for diameters 9/16 inch to and including 3/4 inch

   d. 1/16 inch for diameters 7/8 inch to and including 1 1/8 inches

   e. 3/32 inch for diameters 1 1/4 inches to an including 1 1/2 inches

7. In standing wire ropes, more than two broken wires in one lay in sections beyond end connections or more than one broken wire at an end connection. (For inspection purposes, consider the area within two wire rope diameters of an end connection to be "at an end connection.")

APPENDIX 2 – SHANK HOOK

Two directions of discontinuities are labeled on drawing below as "P" and "T." Discontinuity P parallels the contour of hook and is considered non-serious in nature and does not require removal. Discontinuity T is transverse to contour of hook and is more serious in nature. Discontinuity T, when occurring in Zones B, C, or D, may reduce longevity of hook.

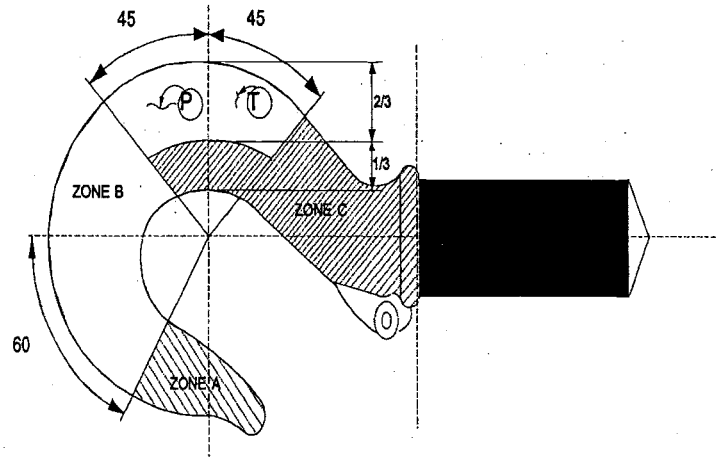

SHANK HOOK

APPENDIX 3 – TORQUE VALUE CHARTS

Wire Rope Clips, Type I

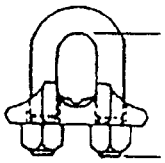

Clip size (inch)	Minimum number of clips	Amount of wire rope to turn back in inches	*Torque in feet (lb)
1/8	2	3-1/4	4.5
3/16	2	3-3/4	7.5
1/4	2	4-3/4	15
5/16	2	5-1/4	30
3/8	2	6-1/2	45
7/16	2	7	65
1/2	3	11-1/2	65
8/16	3	12	95
5/8	3	12	95
3/4	4	18	130
7/8	4	19	225
1	5	26	225
1-1/8	6	34	225
1-1/4	7	44	360
1-3/8	7	44	360
1-1/2	8	4	360
1-5/8	8	58	430
1-3/4	8	61	590
2	8	71	750
2-1/4	8	73	750
2-1/2	9	84	750
2-3/4	10	100	750
3	10	106	1,200
3-1/2	12	149	1,200

NOTES:
1. If a pulley (sheave) is used for turning back the wire rope, add one additional clip.
2. If a greater number of clips are used than shown in the table, the amount of turnback should be increased proportionally.
3. The number of clips shown is based upon using RRL of RLL wire rope 6 x 19 or 6 x 37 Class FC or IWRC; IPS or XIP. If Seale construction or similar large outer wire type construction in the 6 x 19 Class is to be used for sizes 1 inch and larger, add one additional clip. If a pulley (sheave) is used for turning back the wire rope, add one additional clip.
4. The number of clips shown also applies to rotation-resistant RRL wire rope, 8 x 19 Class, IPS, XIP, sizes 1-1/2 inch and smaller; and to rotation-resistant RRL wire rope, 19 x 7 Class, IPS, XIP, sizes 1-3/4 inch smaller.

*The tightening torque values shown are based upon the threads being clean, dry, and free of lubrication.

APPENDIX 4 – TORQUE VALUE CHARTS

Wire Rope Clamp Details, Type III

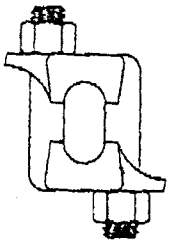

Clip size (inch)	Minimum number of clips	Amount of wire rope to turn back in inches	*Torque in feet (lb)
3/16	2	4	30
1/4	2	4	30
5/16	2	5	30
3/8	2	5-1/4	45
7/16	2	6-1/2	65
1/2	3	11	65
9/16	3	12-3/4	130
5/8	3	13-1/2	130
3/4	3	16	225
7/8	4	26	225
1	5	37	225
1-1/8	5	41	360
1-1/4	6	55	360
1-3/8	6	62	500
1-1/2	7	78	500

NOTES:
1. If a pulley (sheave) is used for turning back the wire rope, add one additional clip.
2. If a greater number of clips are used than shown in the table, the amount of turnback should be increased proportionally.
3. The number of clips shown (see Table 1) is based upon using RRL of RLL wire rope 6 x 19 or 6 x 37 Class FC or IWRC; IPS or XIP. If Seale construction or similar large outer wire type construction in the 6 x 19 Class is to be used for sizes 1 inch and larger, add one additional clip. If a pulley (sheave) is used for turning back the wire rope, add one additional clip.
4. The number of clips shown also applies to rotation resistant RRL wire rope, 8 x 19 Class, IPS, XIP; sizes 1-1/2 inch and smaller; and to rotation-resistant RRL wire rope, 19 x 7 Class, IPS, XIP, sizes 1-1/2 inch smaller.

*The tightening torque values shown are based upon the threads being clean, dry, and free of lubrication.

APPENDIX 5 – SAFETY INFORMATION

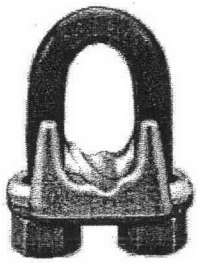

Crosby Clip

Important Safety Information

Read and Follow

Inspection/Maintenance Safety

- Always inspect socket, wedge and pin before using.
- Do not use part showing cracks.
- Do not use modified or substitute parts.
- Repair minor nicks or gouges to socket or pin by lightly grinding until surfaces are smooth. Do not reduce original dimension more than 10%. Do not repair by welding.
- Inspect permanent assemblies annually, or more often in severe operating conditions.
- Do not mix and match wedges or pins between models or sizes.
- Always select the proper wedge and socket for the wire rope size.

Assembly Safety

- Use only with standard 6 to 8 strand wire rope of designated size. For intermediate size wire rope, use next larger size socket. For example: When using 9/16" diameter wire rope use a 5/8" size Wedge Socket Assembly. Welding of the tail on standard wire rope is not recommended. The tail length of the dead end should be a minimum of 6 wire rope diameters but not less than 6".
- Align live end of wire rope, with center line of pin. (See Figure 1)
- Secure dead end section of wire rope. (See Figure 1)
- **DO NOT ATTACH DEAD END TO LIVE END.** (See Figure 2).
- Use a hammer to seat Wedge and Wire Rope as deep into socket as possible before applying first load.
- **To use with Rotation Resistant wire rope** (special wire rope constructions with 8 or more outer strands) ensure that the dead end is welded, brazed or seized before inserting the wire rope into the wedge socket to prevent core slippage or loss of wire rope lay. The tail length of the dead end should be a minimum of 20 wire rope diameters but not less than 6" (See Figure 1).

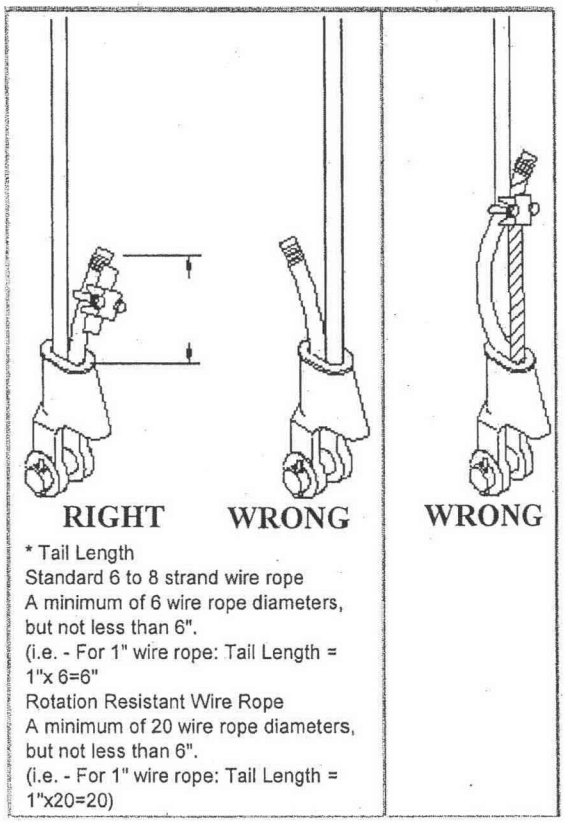

Figure 1 Figure 2

Operating Safety

- Apply first load to fully seat the Wedge and Wire Rope in the socket. This load should be of equal or greater weight than loads expected in use.
- Efficiency rating of the Wedge Socket termination is based upon the catalog breaking strength of Wire Rope. The efficiency of a properly assembled Wedge Socket is 80%.
- During use, do not strike the dead end section with any other elements of the rigging (Called two blocking).

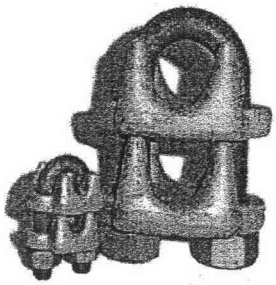

Piggyback Clip

Proper use of CM Big Orange Piggyback Wedge Socket Clips

1. Dead end wire rope tail length should be at least 6 wire rope diameters, but not less than 6 inches beyond the wedge socket.

2. Apply U-bolt and first saddle on dead end wire rope and the second saddle on live end wire rope. Install nuts.

3. Position the dual saddle clip so that 3 to 4 inches of dead end wire rope remain beyond the clip.

4. Tighten nuts evenly. Alternate tightening each nut until reaching the required torque specified.

5. Check that clip does not pinch or clamp the live wire rope. Apply an initial test load equal to the loads expected in regular use. Be certain wire rope is secured properly in the wedge socket prior to any use.

6. Inspect for proper wire rope alignment with wedge socket and retighten the nuts to the specified torque.

WARNING

Improper installation and use of the wedge socket clip can result in bodily injury or property damage.

To avoid injury and damage, use only as a dead end clip in conjunction with a wedge socket as directed. Read and follow instructions.

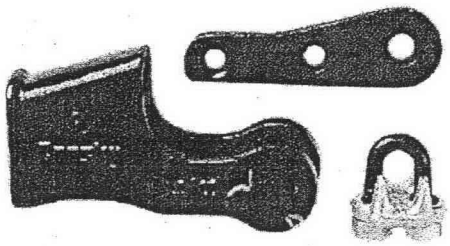

The Terminator™

Crosby's "New & Improved" Wedge Socket

WARNINGS AND APPLICATION INSTRUCTIONS

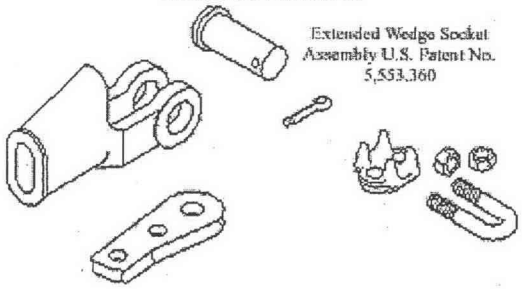

S-421T / US-422T
"TERMINATOR"™

NOTE: Existing Crosby S-421 Wedge Sockets can be retrofitted with the New Terminator Wedge.
New **QUIC CHECK®** "Go" and "No-Go" features cast into wedge. The proper size wire rope is determined when the following criteria are met: 1. The wire rope shall pass thru the "Go" hole in the wedge. 2. The wire rope shall NOT pass thru the "No-Go" hole in the wedge.

Important Safety Information - Read and Follow
Inspection/Maintenance Safety

- Always inspect socket, wedge and pin before using.
- Do not use part showing cracks.
- Do not use modified or substitute parts.
- Repair minor nicks or gouges to socket or pin by lightly grinding until surfaces are smooth. Do not reduce original dimension more than 10%. Do not repair by welding.
- Inspect permanent assemblies annually, or more often in severe operating conditions.
- Do not mix and match wedges or pins between models or sizes.
- Always select the proper wedge and socket for the wire rope size.

WARNING

- Loads may slip or fall if the Wedge Socket is not properly installed.
- A falling load can seriously injure or kill.
- Read and understand these instructions before installing the Wedge Socket.
- Do not side load the Wedge Socket.
- Apply first load to fully seat the Wedge and Wire Rope in the socket. This load should be of equal or greater weight than loads expected in use.
- Do not interchange wedges between S-421Tand US-422T or between sizes.

*Tail Length	
Standard 6 to 8 strand wire rope	**Rotation Resistant Wire Rope**
A minimum of 6 wire rope diameters, but not less than 6"	A minimum of 20 wire rope diameters, but not less than 6".

TABLE 1							
Wire Rope Size	3/8	1/2	5/8	3/4	7/8	1	1 1/8
Clip Size	3/8	1/2	5/8	3/4	7/8	1	1 1/8
*Torque Ft./lbs.	45	65	95	130	225	225	225

* The tightening torque values shown are based upon the threads being clean, dry, and free of lubrication.

Assembly Safety

- Use only with standard 6 to 8 strand wire rope of designated size. For intermediate size wire rope, use next larger size socket. For example: When using 9/16" diameter wire rope use a 5/8" size Wedge Socket Assembly. Welding of the tail on standard wire rope is not recommended. The tail length of the dead end should be a minimum of 6 wire rope diameters but not less than 6" (See Figure 1).

- **To use with Rotation Resistant wire rope** (special wire rope constructions with 8 or more outer strands) ensure that the dead end is welded, brazed or seized before inserting the wire rope into the wedge socket to prevent core slippage or loss of wire rope lay. The tail length of the dead end should be a minimum of 20 wire rope diameters but not less than 6" (See Figure 1).
- Properly match socket, wedge and clip (See Table 1) to wire rope size.
- Align live end of wire rope, with center line of pin.
  (See Figure 1)
- Secure dead end section of wire rope. (See Figure 1)
- Tighten nuts on clip to recommended torque. (Table 1)
- Do not attach dead end to live end or install wedge backwards. (See Figure 2)
- **Use a hammer to seat Wedge and Wire Rope as deep into socket as possible before applying first load.**

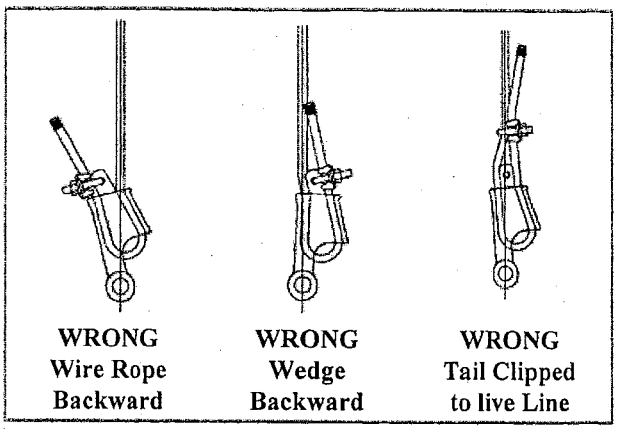

Figure 2

Operating Safety

- Apply first load to fully seat the Wedge and Wire Rope in the socket. This load should be of equal or greater weight than loads expected in use.
- Efficiency rating of the Wedge Socket termination is based upon the catalog breaking strength of Wire Rope. The efficiency of a properly assembled Wedge Socket is 80%.
- During use, do not strike the dead end section with any other elements of the rigging (Called two blocking).

DATA SHEET
(Sheet 1 of 7)

STEP	ITEM	COMMENTS	INIT.	DATE
7.2.1	Safety Guards/Mats			
7.2.2	Carrier Frame/Base			
7.2.3	General Hardware			
7.2.4	Block and Sheaves A. Record the main hook block weight and capacity. Weight: _____ / Capacity: _____ B. Record the auxiliary hook ball weight and capacity. Weight: _____ / Capacity: _____ Verify the above weights and capacities match what's identified in the operators' manual and or the load capacity charts that are in the operator's station. Yes, they do match. _____ No, they do not match. _____ C. Hook block and auxiliary hook ball tie-back slings and shackles. Yes, they are Ok_____ No, reject and replace_____ D. Hook tie-back mounting brackets on the crane used as the anchorage points. Yes, they are OK _____ No, reject and need repaired _____			
7.2.5	Boom and Jib Jib installed and inspected _____ Jib NOT installed, not inspected _____			
7.2.6	Gantry, Pendants, etc.			
7.2.7	Walkways, Ladders			
7.2.8	Tires, Wheels, Tracks			
7.2.9	Fluid Leaks			
7.2.10	Boom Length Indicator			
7.2.11	Outriggers, Devices			
7.2.12	Steering Linkage			
7.3.1	Cleanliness			
7.3.2	Engine/Compressor(s)			
7.3.3	Belt Wear, Cracks			
7.3.4	Class "A" Due Date_____ Class "B" Due Date_____			
7.3.5	Battery Condition			
7.3.6	Lights			
7.3.7	Glass/Windows			
7.3.8	Windshield Wipers			
7.3.9	Clutch/Brake Linkages			
7.3.10	Electric Motors			
7.3.11	Warning/Inst. Plates			
7.3.12	Fire Extinguishers			

Ironworker
Print/signature _____ Date _____

Crane Operator
Print/signature _____ Date _____

Driver
Print/signature _____ Date _____

Qualified Mobile Crane Inspector
Print/signature _____ Date _____

Hanford Operations HO#: _____#_____

DATA SHEET
(Sheet 2 of 7)

STEP	ITEM	COMMENTS	INIT.	DATE
7.4.1	Gauges			
7.4.2	Warning/Indic. Lights			
7.4.3	Oper. Controls/Brakes			
7.4.4	Oper. Visibility			
7.4.5	Load Rating Charts			
7.4.6	Safety Devices/LMI			
7.4.7	Emergency Stops			
7.4.8	List/Trim Indicators			
7.4.9	Boom Angle/Indicator/LMI			
7.4.10	Operators Manual			
7.5.1	Area Safety			
7.5.2	Start Engine			
7.5.3	Deploy Outriggers			
7.5.4	Note Unusual Noises			
7.5.5	Action of Controls			
7.5.6	Brakes, Boom, Load Handlg., Rotate Ops.			
7.5.7	Stability			
7.5.8	No-Load Operation			
7.5.9	Floating Sheave(s)			
7.5.10	Limit Switches			
7.6.1	Tires			
7.6.2	Brake Operation			
7.6.3	Vehicle Lights			
7.6.4	Horn			
7.6.5	Windshield Wipers			
7.6.6	Mirrors			

Ironworker
Print/signature _____ Date _____

Crane Operator
Print/signature _____ Date _____

Driver
Print/signature _____ Date _____

Qualified Mobile Crane Inspector
Print/signature _____ Date _____

Hanford Operations HO#: _____#_____

DATA SHEET
(Sheet 3 of 7)

STEP	ITEM	COMMENTS		INIT.	DATE
7.6.7	Heater, Fan, A/C				
7.6.8	Glass Condition				
7.6.9	Seat Belt(s)				
7.6.10	Interior Condition				
7.7.1	Hook Inspection	MAIN BLOCK	AUX. BALL		
	A. Wear				
	B. Cracks				
	C. Deformation				
	D. Corrosion				
	E. Latch				
7.7.3	Remove? YES_____NO_____ Reason for removal_____				
		Main Line	Auxiliary Line		
7.7.4	Ensure Qualification				
7.8.1.A.1	Core support				
.2	Corrosion				
.3	Wear				
B.1	Broken wires				
.2	Worn wires				
.3	End connections				
.4	Improperly applied				
.5	Severe kinking etc.				
C.	Lubrication				
D.	Heat damage				
E.1	Saddles etc.				
.2	Terminal ends				
7.8.2	Replace Wire Rope?				
7.9	Document Replacement	See Data Sheet 7			

Ironworker
Print/signature _____ Date _____

Crane Operator
Print/signature _____ Date _____

Driver
Print/signature _____ Date _____

Qualified Mobile Crane Inspector
Print/signature _____ Date _____

Hanford Operations HO#: _____#_____

DATA SHEET
(Sheet 4 of 7)
HOOK IDENTIFICATION RECORD
MAIN BLOCK HOOK

Inspection Date _____ Crane Location/Bldg. _____

Crane Hanford Operations HO#: # _____

Hook Dimension "A" _____ Hook Dimension "B" _____

Hook Dimension "C" _____

Caliper Serial No. _____ Cal. Due Date _____

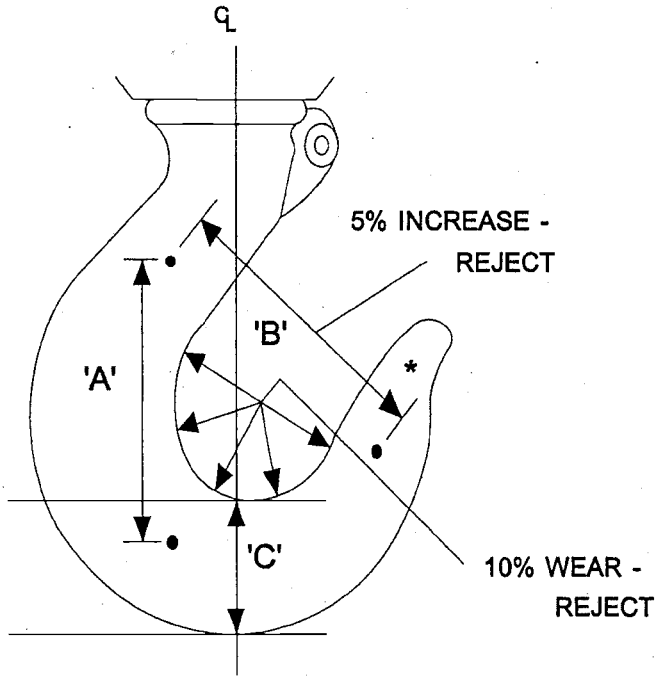

HOOK INSPECTION INFORMATION

1. The measurement between 'A' punchmarks is a reference standard to compare this dimension with. Hooks with manufacture indicators also may be used for quick check measurement of the throat opening.

DATA SHEET
(Sheet 5 of 7)
HOOK IDENTIFICATION RECORD
AUXILIARY BLOCK HOOK

Inspection Date _____ Crane Location/Bldg. _____

Crane Hanford Operations HO#: # _____

Hook Dimension "A" _____ Hook Dimension "B" _____

Hook Dimension "C" _____

Caliper Serial No. _____ Cal. Due Date _____

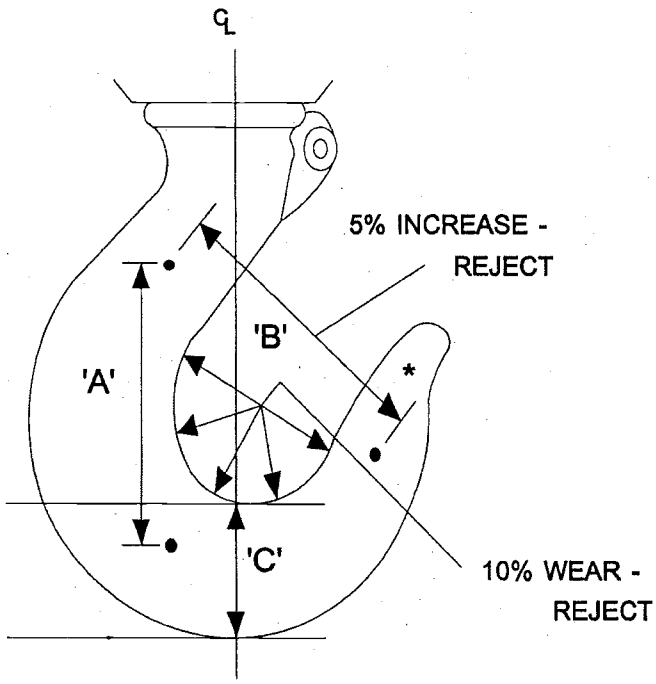

HOOK INSPECTION INFORMATION

1. The measurement between 'A' punchmarks is a reference standard to compare this dimension with. Hooks with manufacture indicators also may be used for quick check measurement of the throat opening.

DATA SHEET
(Sheet 6 of 7)
WIRE ROPE INSPECTION RECORD

Inspection Date	Location of Wire Rope	Measured Dia.	Broken Wires			End Attachments			Wire Rope Damage	Sheave Cond.	Drum Cond.
		Reference Note below	In 1 Wire Rope Lay	In 1 Strand of 1 Lay	Valleys	Broken Wires	Corro-sion of Wire Rope	Fitting Cond.			
	Main Hoist										
	Secondary Hoist										
	Boom Pendants										
	Other:										

COMMENTS: _____

_____

_____

_____

_____

_____

_____

NOTE: Record Dial Caliper Calibration No.: _____#_____ Due Date: _____

Qualified Wire Rope Inspector
Print/signature _____ Date _____

Hanford Operations HO#: _____#_____

DATA SHEET
(Sheet 7 of 7)

7.9 - WIRE ROPE REPLACEMENT CHECKLIST

EQUIPMENT IDENTIFICATION AND LOCATION:

Date of replacement wire rope installation: _____

Wire Rope Manufacturer: _____

Diameter: _____ Strands: _____ Wires/strand: _____ Lay: _____

Wire rope purchase order number: _____

Grade of wire: _____ Type core: _____ Nominal strength: _____

PRIOR TO INITIAL LOAD CYCLE	**INIT.**	**NA**
Wire rope attachment points properly installed		
Fasteners properly torqued Record torque value at dead end: _____ Record torque value at drum attachment: _____ if so required) Record torque wrench Calibration No. _____		
Mobile Crane: Neither the load or the boom shall be lowered below the point where less than two full wraps of wire remain on the drum.		
Reeving in accordance with manufacturer's recommendation		
INITIAL LOAD CYCLE	**INIT.**	**NA**
Initial load cycle performed (maximum down to maximum up position 8 to 10 times with 10 to 20% of rated load)		
AFTER INITIAL LOAD CYCLE, inspect wire rope attachment points (drum and dead end) and retorque		
Wire rope manufacturer's certification placed in equipment history file		

COMMENTS/REMARKS: _____

_____

_____

Qualified Wire Rope Inspector: _____
(Print Name) (Signature) (Date)

- Place completed form in Maintenance History File -

Enclosure 2

7GN-097, CRANE AND RIGGING SERVICES MAINTEANCE PROCEDURE, *FREQUENT INSPECTION OF MOBILE CRANES*

Consisting of 11 pages, including coversheet

CONTINUOUS USE

CRANE & RIGGING SERVICES

MAINTENANCE PROCEDURE

FREQUENT INSPECTION OF MOBILE CRANES

7-GN-097

Revision 7
Change 0

Prepared By:	D. G. Fortune, Sr Technical Writer
Validated By:	D. L. Morgan, Operations Specialist, Crane & Rigging Services
Approved By:	R. D. Silvey, Safety Representative, CS&I
Approved By:	C. E. Brewer, Operations Specialist, Crane & Rigging Services

Final Approval By:	Approval Signature Obtained	11/14/06
	C. E. Brewer, Operations Specialist, Crane & Rigging Services	Date
Released By:	Release Signature Obtained	11/14/06
	D. G. Fortune, Procedure Coordinator	Date

Signatures of approval authority are recorded in this procedure's record file.

REVISION STATUS

Rev/Chg Level	Date	Change Document	Page/s	Description
Rev 2	11/23/93	2U-93-0944	All	This is a complete revision.
[A]	2/17/94	2U-94-0304	All	Fixed typo in title, added step after 7.1.2, added Step G to Data sheet, changed Approval Level from 3S to S, and revised for minor non-administrative changes.
[B]	4/22/94	2U-94-0742	6, 7, 8	Revised Step 7.1.2, deleted NOTE following Step 7.1.4, added new Step 7.1.8, revised Data Sheet, and revised for minor non-administrative changes.
[C]	11/1/94	94-2128	7, 8	Revised Step 7.2, deleted Step 10.2, and revised for minor editorial changes.
Rev 3	5/26/98			2-Year Review.
Rev 4	4/17/01			2-Year Review. Reformatted to current formatting standards. No technical changes.
Rev 5 Chg 0	11/06/01		All	Comprehensive revision to clarify information and definition.
Rev 6 Chg 0	8/9/04	N/A		2-Year Review
Rev 7 Chg 0	11/14/06	N/A	4, 5, 8	2-Year Review. Added document to References and Bibliography. Added Safety Representative to Personnel Requirements. Added Precaution.

TABLE OF CONTENTS

1.0 PURPOSE AND SCOPE 4
2.0 REFERENCES 4
3.0 PERSONNEL REQUIREMENTS 4
4.0 PRECAUTIONS AND LIMITATIONS 4
5.0 SPECIAL TOOLS, EQUIPMENT, AND MATERIALS 5
6.0 PREREQUISITES 5
7.0 INSTRUCTIONS 6
7.1 Conduct Crane Inspection 6
8.0 RESTORATION 8
9.0 TESTING AND ACCEPTANCE 8
10.0 DISPOSITION 8
11.0 BIBLIOGRAPHY 8
ATTACHMENT 1 – SAMPLE WARNING TAG 9
DATA SHEET 1 10

1.0 PURPOSE AND SCOPE

This procedure provides a safe, uniform way of performing frequent inspections of Mobile Cranes. Mobile cranes with noted documented deficiencies requiring repairs shall be tagged in accordance with this procedure. Documented deficiency shall be defined as safety significant item(s) the mobile crane inspector considers having an impact and creating an unsafe condition if the crane continues to operate. Recommended daily when used.

2.0 REFERENCES

- DOE-RL-92-36, Chapter 14, *Mobile Cranes*
- HNF-PRO-29771, *Overhead Crane & Hoist Program*

3.0 PERSONNEL REQUIREMENTS

- Mobile Crane Operator(s)
- Supervisor or Manager, Hoisting and Rigging Operations
- Equipment Custodian
- Supervisor or Manager, Inspection, Maintenance, and Repair
- Designated Leader
- Fleet Maintenance Shop
- Safety Representative (as needed)

4.0 PRECAUTIONS AND LIMITATIONS

4.1 If, during performance of this procedure, any of the following conditions are found, **IMMEDIATELY** stop work, place equipment in a safe condition, and notify Supervision:

- Any equipment malfunction, which could prevent fulfillment of its functional requirements.
- Personnel error or procedural inadequacy, which could prevent fulfillment of procedural requirements.

4.2 Contact Supervision for additional instructions if changing plant conditions affect work or delays in work extend past end of shift.

4.3 If any waste is generated during performance of this instruction consult Facility/Plant/Area Hazardous Waste Coordinator for specific instructions to ensure compliance with Company and DOE environmental standards, as applicable, for disposal.

4.4 Comply with Company and Plant/Facility Specific Lock and Tag or Over-Tagging requirements, as applicable. Refer to Work Package for specific Lock and Tag instructions.

4.5 Observe safety rules for operators in accordance with DOE-RL-92-36, Hanford Site Hoisting and Rigging Manual, Section 14.0, Chapter 14, *"Mobile Cranes"*

4.6 Comply with AJHA or facility specific AJHA for hazard identification specific to the facility where the maintenance is being performed.

5.0 SPECIAL TOOLS, EQUIPMENT, AND MATERIALS

- Flashlight
- Tape measure
- Other items as required by Operator

6.0 PREREQUISITES

NOTE

The Equipment Custodian shall provide a careful evaluation and determine the corrective action to be taken. The Manager may place a crane into service that has a noted deficiency, providing it does not constitute a safety hazard.

6.1 Cranes identified with deficient safety item(s) shall be tagged with a "WARNING" tag by the Operator, reference page 10 for example. The warning tag must have a legibly written description of the item(s) found deficient and be signed and dated by the individual identifying the deficiencies. Deficiencies found during a frequent inspection shall be documented on the Daily Crane Inspection record Data Sheet 1 and reported to your immediate supervisor who shall inform the Equipment Custodian.

The tag shall be secured to the crane steering wheel located in the operators' crane cab on a rough terrain or the controls on a crawler-mounted crane, and the driver's cab steering wheel of a truck-mounted crane. Immediately report the deficiency to your supervisor, who shall then report it to the Equipment Custodian. The Equipment Custodian shall make all the necessary contacts to the Fleet Maintenance shop in reporting and tracking repairs. When deficiencies are found that may impair the safe operation of the crane, the Equipment Custodian shall contact the Fleet Maintenance shop for determination on the operability of the crane, i.e., "Is it safe to operate or transport the crane under its own power or does it need to be transported by tractor and trailer back to the shop, or do the repairs need to be made in the field?" Once a repair is completed all effort shall be made to have the Operator remove the "WARNING" tag to assure the deficiency was fixed to his satisfaction. If the Operator cannot be contacted, the Equipment Custodian may remove the "WARNING tag".

6.3 Copies of frequent inspection procedure shall be made available for use and can be obtained from your immediate supervisor or the Equipment Custodian.

6.4 Copies of PM data sheet(s) and the VFM job card shall be obtained by the Equipment Custodian and kept in the crane history files.

7.0 INSTRUCTIONS

NOTES

- Operators shall perform a frequent inspection of Mobile Cranes prior to use unless a previous inspection on the same day can be verified verbally or by documentation.
- The mobile crane Operator shall ensure inspections are current via inspection sticker, "Crane Pool Periodic Mobile Crane and Wire Rope Inspection Due Date Sticker".
- Frequent inspections are held to determine that crane is safe for use.

7.1 <u>Conduct Crane Inspection</u>

7.1.1 CHECK control mechanisms for improper adjustment that may interfere with correct operation.

7.1.2 CHECK safety devices for proper operation. Anti-two-block, two-block warning, and two-block damage prevention systems shall be checked and inspected by the Operator or other qualified person to ensure the system is functional in accordance with the system's manufacturer's instructions.

7.1.3 Visually INSPECT hydraulic hoses for leaks and cracks.

7.1.4 Hoses that flex during normal operation of crane functions shall be visually inspected.

7.1.5 Visually INSPECT crane hooks and latches for deformation, chemical damage, cracks, and wear.

7.1.6 CHECK hydraulic system for proper oil level.

NOTE

A visual inspection consists of observing the rope that can be reasonably expected to be used during the days' operations. Identifying gross damage or immediate hazards of the following types is of the utmost concern:

- Inspect rope reeving for compliance with crane manufacturer's specifications.
- Rope distortion such as kinking, crushing, unstranding, bird caging, main strand displacement, or core protrusion. Loss of rope diameter in a short rope length and/or uneven outer strands are suspect criteria for rope replacement.
- General corrosion
- Broken or cut strands
- Number and distribution of visible broken wires. See DOE-RL-92-36, *Hanford Site Hoisting and Rigging Manual*, Section 8.0, "Wire Rope," for additional guidance.

7.1.7 Visually INSPECT all running ropes.

7.1.8 EXAMINE electrical apparatus for proper operation, signs of excessive deterioration, dirt, and moisture accumulation.

7.1.9 Check that the LMI system is functioning and operating correctly.

7.1.10 Check the lubricating systems for proper delivery of lubricant.

7.2 A Daily Crane Inspection Record Data Sheet 1 shall be completed when equipment discrepancies are found. Enter "N/A" (Not Applicable) where checklist data points are left blank. This will assure all attributes have been addressed.

8.0 RESTORATION

8.1 Restore equipment to original configuration, as required. Fleet Maintenance will restore the equipment to the original configuration as required. Fleet Maintenance and the Equipment Custodian have the authority to remove Warning tag(s). The Operator who originally tagged the crane for repair shall be contacted to remove the "WARNING" tag. If for some reason the Operator cannot be reached, i.e., sick, vacation, or back shift, the Equipment Custodian may remove the "WARNING" tag. The Equipment Custodian has the authority to remove Warning tag(s) and the crane maybe put back into service.

9.0 TESTING AND ACCEPTANCE

Fleet Maintenance shall determine if load testing is required after repairs are made.

10.0 DISPOSITION

10.1 Report deficiencies or cause of early failure to your immediate supervision who will contact the Equipment Custodian.

NOTE

Record retention is not required in the Crane Maintenance File unless a noted documented deficiency is recorded on the Daily Crane Inspection Data Sheet and repairs are needed. The documented deficiency on the Daily Crane Inspection Data Sheet along with the Vehicle Fleet Maintenance (VFM) job copy shall be kept in the Crane Maintenance File.

11.0 BIBLIOGRAPHY

- HNF-RD-11183, *Personal Protection*
- HNF-RD-17626, *Lock and Tag Requirements*
- DOE-RL-92-36, *Hanford Site Hoisting and Rigging Manual*, Section 14.0, "Mobile Cranes"
- ASME B30.5, *Mobile and Locomotive Cranes*
- 29 CFR 1910.180, *Crawler, Locomotive and Truck Cranes*
- HNF-PRO-29771, *Overhead Crane & Hoist Program*

ATTACHMENT 1 – SAMPLE WARNING TAG

DATA SHEET 1

(Sheet 1 of 1)

~~DAILY~~ CRANE INSPECTION	
Equipment No. _____	Date: _____
Inspected by: Print Name_____	
☐ Verify inspection due date sticker is in place and within certification.	
Operational Check of:	
1. Hoisting Mechanism	2. Carrier Operations
☐ a. Hoist	☐ a. Water Level(s)
☐ b. Swing	☐ b. Oil Level(s)
☐ c. Boom and Extension Hydraulics	☐ c. Lights
☐ d. Brakes	☐ d. Tires/Inflation
☐ e. Hooks	☐ e. Gauges
☐ f. Wire Rope	☐ f. Safety Equipment
☐ g. Hydraulic Hoses/Equipment	☐ g. Two-block damage prevention feature - two-block warning feature
☐ h. Safety Equipment	☐ h. LMI functioning and operating properly
☐ i. Oil, Water, and Gauges	
☐ j. Anti-two-block devices working properly	
Service Due: _____	
Signature: _____	
Comments:	

Enclosure 3

7GN-179, CRANE AND RIGGING SERVICES MAINTEANCE PROCEDURE, *ANNUAL MOBILE CRANE INSPECTIONS*

Consisting of 40 pages, including coversheet

CONTINUOUS USE

CRANE & RIGGING SERVICES

MAINTENANCE PROCEDURE

ANNUAL MOBILE CRANE INSPECTIONS

7-GN-179

Revision 0
Change 0

Prepared By:	D. G. Fortune, Sr Technical Writer, CS&I
Validated/Reviewed By:	D. L. Morgan, Operations Specialist, Crane & Rigging Services
Reviewed/Approved By:	R. J. Gillespie, Crane & Rigging Services
Reviewed/Approved By:	Randy Spaniel, Safety Engineer, CS&I
Reviewed/Approved By:	C. E. Brewer, Operations Specialist, Crane & Rigging Services

Approval By:	Approval Signature Obtained C. E. Brewer, Operations Specialist, Crane & Rigging Services	12/3/08 Date
Final Approval By:	Approval Signature Obtained S. M. Holloman, Manager, Site Crane and Rigging Services	12/3/08 Date
Released By:	Release Signature Obtained D. G. Fortune, Procedure Coordinator, CS&I	12/4/08 Date

Signatures of approval authority are recorded in this procedure's record file.

REVISION STATUS

Rev/Chg Level	Date	Change Document	Page/s	Description
Rev 0 Chg 0	12/3/08	N/A	All	New Document

TABLE OF CONTENTS

1.0 PURPOSE AND SCOPE 4
2.0 REFERENCES 4
3.0 PERSONNEL REQUIREMENTS 4
4.0 PRECAUTIONS AND LIMITATIONS 5
5.0 SPECIAL TOOLS, EQUIPMENT, AND MATERIALS 6
6.0 PREREQUISITES 7
7.0 INSTRUCTIONS 8
7.1 Inspection Site 8
7.2 Conduct Walk-Around Inspection 8
7.3 Conduct Machinery House Inspection 10
7.4 Conduct Operator Cab Inspection 12
7.5 Conduct Operational Inspection 13
7.6 Conduct Vehicle/Truck Inspection 13
7.7 Hook Inspection 14
7.8 Wire Rope Inspection 16
7.9 Wire Rope Replacement 17
8.0 RESTORATION 19
9.0 TESTING AND ACCEPTANCE 20
9.1 Load Tests 20
10.0 DISPOSITION 20
11.0 BIBLIOGRAPHY 20
ATTACHMENT 1 – SAMPLE WARNING TAG 21
ATTACHMENT 2 – SAMPLE DUE DATE STICKER 22
APPENDIX 1 – WIRE ROPE ACCEPTANCE CRITERIA 23
APPENDIX 2 – SHANK HOOK 24
APPENDIX 3 – TORQUE VALUE CHARTS 25
APPENDIX 4 – TORQUE VALUE CHARTS 26
APPENDIX 5 –SAFETY INFORMATION 27
DATA SHEET 31

1.0 PURPOSE AND SCOPE

This procedure will establish a sequence of steps to perform inspection of mobile cranes on an annual basis.

This inspection is in addition to the Class A inspection conducted by Fleet Maintenance personnel.

Mobile cranes with noted documented deficiencies requiring repairs shall be tagged according to this procedure. Documented deficiency shall be defined as safety significant item(s) the mobile crane inspector considers having an impact and creating an unsafe condition if the crane continues to operate.

Applicable inspection listed shall comply with the requirements of DOE-RL-92-36, *Hanford Site Hoisting and Rigging Manual*, and ASME B30.5.

2.0 REFERENCES

None

3.0 PERSONNEL REQUIREMENTS

3.1 Qualified Mobile Crane Inspector

3.2 Supervisor or manager, Hoisting and Rigging Operations

3.3 Equipment Custodian

3.4 Supervisor or manager, Inspection, Maintenance, and Repair

3.5 Designated Leader

3.6 Fleet maintenance Shop

3.7 Rigger

3.8 Crane Operator

3.9 Truck driver, as required

3.10 Qualified Wire Rope Inspector (QWRI)

4.0 PRECAUTIONS AND LIMITATIONS

4.1 If during performance of this procedure, any of the following conditions are found, **immediately** stop work, place equipment in a safe condition, and notify Supervision:

- Any equipment malfunction which could prevent fulfillment of its functional requirements.
- Personnel error or procedural inadequacy which could prevent fulfillment of procedural requirements.

4.2 Contact Supervision for additional instructions if changing plant conditions affect work or delays in work extend past end of shift.

4.3 Comply with Company and plant/facility specific lock and tag or over-tagging requirements, as applicable. Refer to Work Package for specific lock and tag instructions.

4.4 If performance of any step(s) in this procedure is not required for procedure completion, steps not performed shall be indicated as such by entering "N/A" in appropriate Data Sheet signoff space.

4.5 Observe safety rules for operators in accordance with DOE-RL-92-36, *Hanford Site Hoisting and Rigging Manual* Section 4.0 "Personnel Qualifications and Training Requirements."

4.6 If the mobile crane is a regulated piece of equipment, contact HPT prior to start of work. A personal survey is required at the completion of work.

5.0 SPECIAL TOOLS, EQUIPMENT, AND MATERIALS

NOTES

Measuring and Test Equipment (M&TE) used to collect qualitative data during performance of this procedure shall meet the following requirements:

- Be within its current calibration cycle as evidenced by an affixed calibration label.
- Be capable of desired range.
- Have an accuracy consistent with state-of-the-art limitations:
  - equal to or greater than input tolerance specified on Data Sheet,

    OR, if device being calibrated is not recall related,
  - at least 4 times greater than specified device tolerance.

- Sheave gauges
- Caliper (for hook inspection). Dial indicating or digital type shall be graduated in .001" increments. Those without dials shall be measured along a rule
- Torque wrench (range capable of required bolt torque)
- Measuring tape (rule), minimum graduations = 1/32"
- Personal Protective Equipment, including leather gloves
- Wire rope lubricant
- Flashlight

6.0 PREREQUISITES

NOTES

- The Equipment Custodian shall provide a careful evaluation and determine the corrective action to be taken. The Responsible Site Crane and Rigging Services Manager may place a crane into service that has a noted deficiency, providing it does not constitute a safety hazard or regulatory requirement.
- Completed, documented inspection shall be performed at least annually (depending upon crane activity, severity of service, and environment).

6.1 Obtain release from Operations management prior to beginning performance of this instruction.

6.2 Deficiencies found during an annual inspection shall be reported to your immediate supervisor who shall contact the Equipment Custodian.

6.3 Cranes identified with safety significant item(s) shall be tagged with a "WARNING" tag, by the mobile crane inspector, equipment custodian or supervisor. Reference page 23 for example. The warning tag must have a legibly written description of the item(s) found deficient and be signed and dated by the mobile crane inspector, equipment custodian or supervisor. The tag shall be secured to the crane steering wheel located in the operators' crane cab on a rough terrain or the controls on a crawler-mounted crane, and the driver's cab steering wheel of a truck-mounted crane. Immediately report the deficiency to your supervisor, who shall then report it to the Equipment Custodian. The Equipment Custodian shall make all the necessary contacts to the fleet maintenance shop in reporting and tracking repairs. When deficiencies are found that impair the safe operation of the crane, the Equipment Custodian shall contact the Fleet Maintenance shop for determination on the operability of the crane, i.e., is it safe to operate or transport the crane under its own power or if it needs transported by tractor and trailer back to the shop, or do the repairs need to be made in the field?" Once a repair is completed all effort shall be made to have the mobile crane inspector remove the "WARNING" tag to assure the deficiency was fixed to his satisfaction. If the mobile crane inspector cannot be contacted the equipment custodian or supervisor may remove the "WARNING tag".

6.4 Copies of annual inspection procedure shall be made available for use and can be obtained from your immediate supervisor or the Equipment Custodian.

6.5 The Supervisor shall be responsible to ensure all inspections are performed and appropriate documentation is completed.

6.6 Inspection site should be level and free of ice, water, or overhead wires, in a suitable area capable of performing all mechanical functions in a safe manner.

6.7 Copies of PM data sheet(s) shall be obtained by the Equipment Custodian and kept in the crane maintenance files. VFM job cards shall be kept by fleet Maintenance Shop.

7.0 INSTRUCTIONS

NOTES

- A completed, documented inspection shall be performed (reference attached inspection report) by the qualified inspector(s).
- Carrier portion of Annual inspections and other cranes that require a driver to make carrier inspections shall be signed by the driver.
- Annual inspections shall be filled out as appropriate, signed, dated and returned to the Supervisor. Any maintenance or repair shall be noted on the inspection procedure.
- The responsible Site Crane and Rigging Services Manager can put into service a crane that has a noted deficiency, provided a careful evaluation determines the deficiency does not constitute a safety hazard or regulatory requirement.

7.1 Inspection Site

7.1.1 CHOOSE suitable site **AND** PREPARE crane for inspection.

7.2 Conduct Walk-Around Inspection

7.2.1 CHECK proper installation of safety guards and mats.

7.2.2 CHECK carrier frame and rotating base for structural defects, cracks, bent braces, loose bolts, etc.

7.2.3 NOTE condition of installed general hardware for bends, cracks, or loose bolts.

NOTE

Use sheave gauges to check sheaves for excessive wear.

7.2.4 CHECK condition of:

A. Main hook block. RECORD weight and capacity on Data Sheet.

B. Auxiliary hook ball. RECORD weight and capacity on Data Sheet.

C. Hook block and auxiliary hook ball tie-back slings and shackles. Only synthetic or wire rope slings shall be used for this purpose. Each sling shall be marked with similar wording, "Used for hook tie-back only, not to be used for overhead lifting". Inspect these tie-back slings for the out-of-service criteria as defined in the Hanford Site Hoisting and Rigging Manual, Chapter 9.0, "Slings". Also check the shackles used to secure the tie-back slings, reference chapter 10.0 "Rigging Hardware". RECORD condition on Data Sheet.

D. Check the hook tie-back mounting brackets on the crane used as the anchorage points for the hook tie-back slings for the following conditions. RECORD condition on Data Sheet.

1. NOTE any deformed, cracked, or corroded members and welded areas.
2. CHECK for loose, damaged, or missing bolts, rivets, nuts, pins, etc.
3. INSPECT (visually) all load and hook eyes for damage, corrosion, deformation, cracks, excessive wear, and signs of over-stressing.

NOTE

All hook and ball assemblies and load blocks shall be labeled with their rated capacity and weight. (Reference DOE-RL-92-36, Chapter 14.6.4 "Mobile Cranes")

7.2.5 NOTE condition of boom and jib.

7.2.6 CHECK gantry, pendants, boom stops.

7.2.7 NOTE condition of walkways, ladders, handrails.

7.2.8 CHECK tires, wheels, tracks.

7.2.9 NOTE any fuel line, lubricant, hydraulic/pneumatic line/cylinder, water, fittings, pressure relief valve, etc. leaks.

7.2.10 CHECK boom length indicator for proper operation.

7.2.11 CHECK outriggers and locking devices.

7.2.12 CHECK steering control linkage for wear or loose nuts and bolts.

7.2.13 Ensure results of inspection are recorded on Data Sheets.

7.3 Conduct Machinery House Inspection

7.3.1 CHECK cleanliness, housekeeping of interior.

7.3.2 CHECK engine/compressor conditions.

A. NOTE any fuel, lubricant, or oil leaks.

B. CHECK condition of coolant (anti-freeze, water).

7.3.3 CHECK belts for wear and cracks.

7.3.4 MAKE note of Class "A" & Class "B" inspection due dates. When the Due date of the Class "A" expires the crane shall be tagged out of service until the Fleet maintenance shop completes the Class "A" inspection. The Class "B" inspection is lubrication, air filter inspection/change and oil/filter change, and the crane may used beyond the Due date, but should promptly be rescheduled for completion the next appropriate opportunity the Fleet Maintenance shop has open.

7.3.5 CHECK battery condition, and cables.

7.3.6 CHECK all lights functional - interior and exterior.

7.3.7 CHECK condition of all glass/windows.

7.3.8 CHECK windshield wiper(s) for proper operation.

7.3.9 CHECK condition of clutch and brake linkages/linings.

7.3.10 NOTE condition of electric motors.

7.3.11 CHECK that all warning/instruction plates are properly installed. ALSO NOTE: Standard hand signals for controlling mobile crane operations shall be conspicuously posted on the crane. Electrical warning signs shall be installed at the Operator's station and on the outside of the crane, warning that electrocution or serious bodily injury may occur unless minimum clearances are maintained between the crane or load being handled and energized power lines as specified below:

TABLE 1: REQUIRED CLEARANCE FOR NORMAL VOLTAGE IN OPERATION NEAR HIGH VOLTAGE POWER LINES AND OPERATION IN TRANSIT WITH NO LOAD AND BOOM OR MAST LOWERED

Normal Voltage, kV (Phase to Phase)	Minimum Required Clearance, ft (m) [Note 1)]
Operation Near High Voltage Power Lines	
To 50	10 (3.05)
Over 50 to 200	15 (4.60)
Over 200 to 350	20 (6.10)
Over 350 to 500	25 (7.62)
Over 500 to 750	35 (10.67)
Over 750 to 1000	45 (13.72)
Operation in Transit With No Load and Boom or Mast Lowered	
To 0.75	4 (1.22)
Over 0.75 to 50	6 (1.83)
Over 50 to 345	10 (3.05)
Over 345 to 750	16 (4.87)
Over 750 to 1000	20 (6.10)

NOTE:

(1) Environmental conditions such as fog, smoke, or precipitation may require increased clearances.

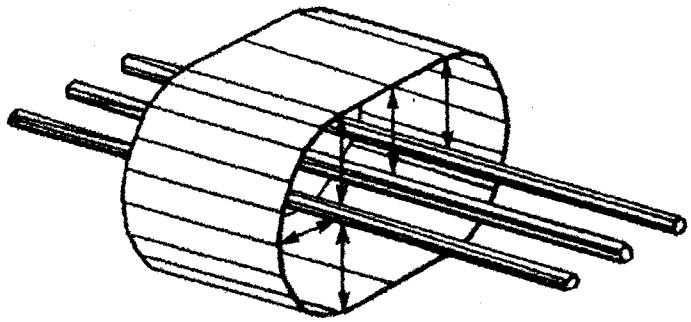

GENERAL NOTE: See Table 1 for minimum radial distance of prohibited zone.

7.3.12 CHECK **AND** ENSURE that fire extinguishers are in good condition, is a 10BC, usable, and accessible.

7.3.13 Ensure results of inspection are recorded on Data Sheets.

7.4 Conduct Operator Cab Inspection

7.4.1 CHECK condition of all gauges.

7.4.2 CHECK for proper operation of warning/indicator lights.

7.4.3 CHECK condition of operator controls and brakes.

7.4.4 CHECK for adequate operator visibility.

7.4.5 CHECK that load rating charts are posted.

7.4.6 CHECK safety devices & operator aids/ Load Moment Indicators (LMI) for functioning and accuracy

7.4.7 CHECK emergency stops in place and functioning.

7.4.8 CHECK list and trim indicators in place and functioning.

7.4.9 CHECK boom angle indicator in place and functioning.

7.4.10 CHECK that Operator's manual is in place.

7.4.11 Ensure results of inspection are recorded on Data Sheets.

7.5 Conduct Operational Inspection

7.5.1 NOTE condition of area safety.

7.5.2 START crane engine.

7.5.3 DEPLOY outriggers.

7.5.4 NOTE any unusual equipment noises.

7.5.5 NOTE action/operation of controls.

7.5.6 INSPECT brakes, boom, load handling, and rotating operations.

7.5.7 NOTE crane's stability.

7.5.8 INSPECT operation under no-load condition.

7.5.9 INSPECT floating sheave(s).

7.5.10 CHECK to ensure all limit switches / operator aids function properly.

7.5.11 Ensure results of inspection are recorded on Data Sheets.

7.6 Conduct Vehicle/Truck Inspection

7.6.1 NOTE tire condition (cuts, tread wear, etc.).

7.6.2 Brake operation.

7.6.3 CHECK operation of lights:

A. Headlights

1. High beam

2. Low beam

B. Tail lights

C. Stop lights

D. Turn signal lights

E. Back-up lights/warning beeper

7.6.4 CHECK horn operation.

7.6.5 CHECK windshield wiper operation.

7.6.6 CHECK mirrors are functional and in good condition.

7.6.7 CHECK heater/fan/air conditioner operation.

7.6.8 CHECK glass condition (NOTE all rock pits, cracks, etc.).

7.6.9 CHECK seat belt condition.

7.6.10 CHECK interior condition:

A. Cleanliness

B. Upholstery condition

C. Visors condition

7.6.11 Ensure results of inspection are recorded on Data Sheets.

7.7 Hook Inspection

NOTE

- The following instructions are for the inspection of hooks typically found attached to a crane, hoist or may be used as lift hooks attached to or used with a "Below-the-Hook Lifting Device".
- Cutting, bending, welding, painting, or heating of hooks shall not be permitted. Abrasive cleaning to aid in inspection is permitted in accordance with DOE-RL-92-36, Section 5.5.2.6. Hook repair by grinding may occur **ONLY** within limits specified in DOE-RL-92-36, Attachment 5.1, and be performed in accordance with Procedure 7-GN-137.

7.7.1 INSPECT (crane/hoist type) hook for the following conditions: RECORD results of inspection on Data Sheet.

A. Wear

B. Cracks

C. Corrosion

D. Condition of the hook latch

E. Deformation

7.7.2 RECORD caliper calibration data on Data Sheets 4 and 5.

NOTE

Local repair of hooks **SHALL NOT** be attempted.

7.7.3 REMOVE hook(s) from service for destruction or for return to manufacturer (for reworking to original specifications) if any of the following conditions exist. RECORD results of inspection on Hook Identification Record Data Sheet(s).

A. 5% increase in throat opening.

B. 10% wear of the original section dimension of the hook or its load pin or as otherwise directed by the hook manufacturer.

C. Any visible bending or twisting from the plane of the unbent hook.

D. Any visible crack.

E. Inability to lock. Any self-locking hook that does not lock.

F. Inoperative latch. Any latch that does not close the hook's throat.

NOTES

- **HOOKS IN NORMAL SERVICE DO NOT ROUTINELY REQUIRE NDT**. See DOE-RL-92-36, Section 5.0, Existing crane/hoist hooks with rated load greater than or equal to **10 TONS AND ASSIGNED TO HEAVY OR SEVERE SERVICE** shall receive an NDT by a qualified inspector at the following intervals:
  1. Heavy service – annually
  2. Severe service – semiannually (every 6 months)
- The type of NDE is dependent upon material from which the hook is fabricated. The report of hook inspection shall be recorded in writing on Data Sheet 2 and shall be placed in the equipment history file.

7.7.4 ENSURE hooks are qualified for service by verifying the following is present on the MAXIMO work task order.

A. Record of original hook measurements are used to compare existing hook measurements. Record of previous periodic inspection is in package.

7.7.5 ENSURE discrepancies and actions taken are recorded in Attachments or Data Sheets, as applicable.

7.8 Wire Rope Inspection

NOTES

Only by inspection can the condition of wire rope be determined. Based on experience, and in accordance with wire rope inspection criteria, a Qualified Wire Rope Inspector (QWRI) shall determine the following:

- Does the wire rope's existing condition present the possibility of a failure?
- Is the rate of deterioration of the wire rope such that it will remain in safe condition until the next scheduled inspection?
- A thorough inspection shall cover the entire length of each wire rope by a QWRI. Leaving the first layer of wire rope on the drum of mobile cranes is acceptable as long as the qualified inspector can determine through visual inspection that there is no apparent condition that would require further removal or meet out of service criteria and end connections are acceptable and secure. An inspection report on supplied data sheets shall be and kept in the Crane maintenance File. The report shall indicate if any of the following deficiencies exist.

7.8.1 Annual Inspection

A. INSPECT for reduction of wire rope diameter due to:

1. Loss of core support or reduction of wire rope diameter below nominal diameter as identified in **APPENDIX 1**, internal or external corrosion, or wear of outside wires.
2. Internal or external corrosion

B. INSPECT for loss of wire rope strength due to:

1. Number of broken outside wires and the degree of distribution or concentration of such broken wires
2. Worn outside wires
3. Corroded or broken wires at end connections
4. Corroded, cracked, bent, worn, or improperly applied end connections
5. Severe kinking, crushing, cutting, or unstranding

NOTE

Lubricant shall be applied when determined by the QWRI. Wire Rope lubricant shall be compatible with the original lubricant or an approved equal by the Crane and Rigging Equipment Custodian.

C. INSPECT for improper or insufficient lubrication.

D. CHECK for evidence of heat damage from any source.

E. INSPECT (closely) the following areas of possible rapid deterioration:

1. Sections in contact with saddles, equalizer sheaves, or other sheaves where wire rope travel is limited.

2. Sections of the wire rope at or near terminal ends where corroded or broken wires may protrude.

7.8.2 REPLACE wire rope when the values in **APPENDIX 1** are reached or exceeded.

NOTE

When replacement of wire rope is performed, those activities required to be documented on the Wire Rope Replacement Checklist.

7.9 Wire Rope Replacement

7.9.1 INSTALL new wire rope (as required) in accordance with manufacturer's instructions and DOE-RL-92-36, Section 8.6 and 7.

7.9.2 LUBRICATE wire rope in accordance with manufacturer's instructions and DOE-RL-92-36, Section 8.5.4.2 and 3.

7.9.3 INSPECT (QWRI) replaced wire rope for the following prior to conducting initial load cycle:

A. The wire rope attachment points to the hoist drum and dead end are properly installed. See Appendix 3, 4 and 5.

B. Wire rope clips are properly torqued. See Appendix 3, 4 and 5.

C. Reeving is in accordance with the manufacturer's recommendations.

D. Replacement wire rope shall be the same size, grade and construction, and have a strength rating equal to the original wire rope furnished or recommended by the crane or hoist manufacturer. Replacement wire ropes shall be manufactured by a member of the Wire Rope Technical Board or acquired from the crane or hoist manufacturer by part number. Replacement wire ropes shall be acquired with signed test certification indicating actual breaking strength and origin of wire rope. Wire rope manufacturer's certification shall be retained in the Maintenance History File.

NOTE

After wire rope replacement, and before returning the equipment to service, the hoist unit shall be cycled eight to ten times with 10% to 20% of rated load. Cycle as much usable wire rope as crane configuration will allow.

7.9.4 PERFORM initial load cycle.

NOTE

After initial load cycle, inspect wire rope attachment points (drum and dead end) and re-torque (if required.)

NOTES

A completed wire rope replacement checklist, signed and dated by QWRI, shall be placed in Crane Maintenance File. In addition to inspection records in Crane Maintenance File, replacement of wire rope shall have a signed certification from wire rope manufacturer. The manufacturer's certification shall contain:

1. Wire rope diameter.
2. Wire rope classification (number of strands, X wire per strand, e.g., 6X19).
3. Lay.
4. Grade of wire (e.g., Improved Plow Steel, Extra Improved Plow Steel).
5. Type of core.
6. Nominal breaking strength.
7. Wire rope purchase order number.

7.9.5 DOCUMENT wire rope replacement on Data Sheet/Wire Rope Replacement Record.

7.10 ENSURE all inspections and corrections are documented on attached Data Sheets.

Once completed, if the cranes Annual mobile crane inspection is accepted the mobile crane inspector shall attach to the inside of the operators station an "Inspection Due Date Sticker". The previous year's sticker shall be removed and replaced with new. The mobile crane inspector shall print the next inspection due date with **month & year** only and print his **name** clearly. This sticker informs the operator that the crane is within certification, or out of certification. The stickers will be issued to the qualified inspector each month and affixed to the preventative maintenance (PM) package. Additional stickers can be obtained from the mobile crane pool coordinator. See attachment 2 "Sample Due Date Sticker" page 24 of 40.

8.0 RESTORATION

Fleet Maintenance will restore the equipment to the original configuration as required.

9.0 TESTING AND ACCEPTANCE

NOTES

- Cranes shall be load tested prior to initial use or after load bearing parts have been altered, replaced, or repaired. **THE REPLACEMENT OF WIRE ROPE (LOAD LINES OR STATIC LINES) IS SPECIFICALLY EXCLUDED FROM THIS REQUIREMENT**. However, a functional test of the crane under a normal operating load shall be made before placing crane back in service.

9.1 Load Tests

9.1.1 Fleet Maintenance shall determine if load-sustaining parts have been altered, replaced, or repaired and a load test is required.

10.0 DISPOSITION

10.1 Report deficiencies or cause of early failure to your immediate supervisor who will contact the Equipment Custodian.

10.2 Send copy of completed inspection report to Equipment Custodian to be retained in Crane Maintenance File.

10.3 The documented deficiency data sheet(s) shall be kept in the Crane Maintenance File.

11.0 BIBLIOGRAPHY

- DOE-RL-92-36, *Hanford Site Hoisting and Rigging Manual*, Section 14.0, "Mobile Cranes."
- ANSI B30.5, *Mobile and Locomotive Cranes*
- 29 CFR 1910.180, *Crawler, Locomotive and Truck Cranes*
- ANSI, B30.10, *Hooks*

ATTACHMENT 1 – SAMPLE WARNING TAG

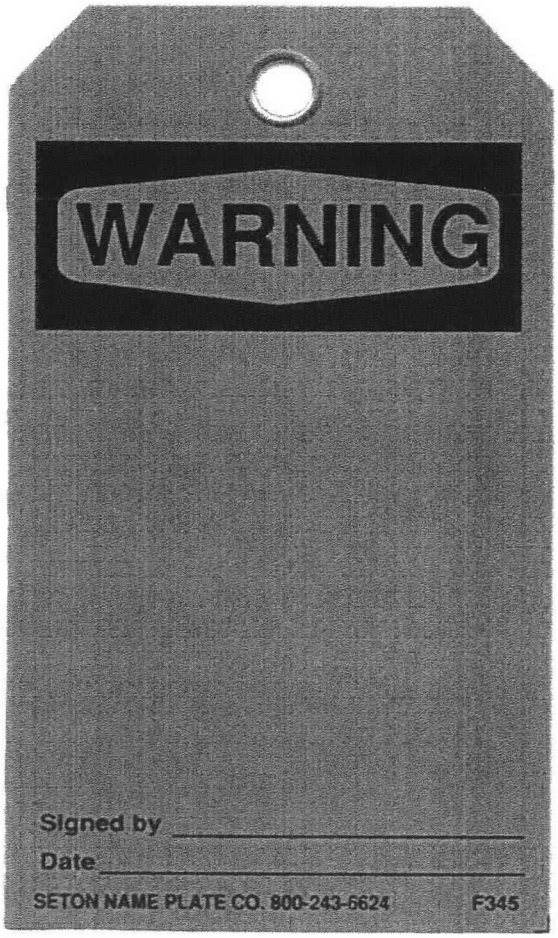

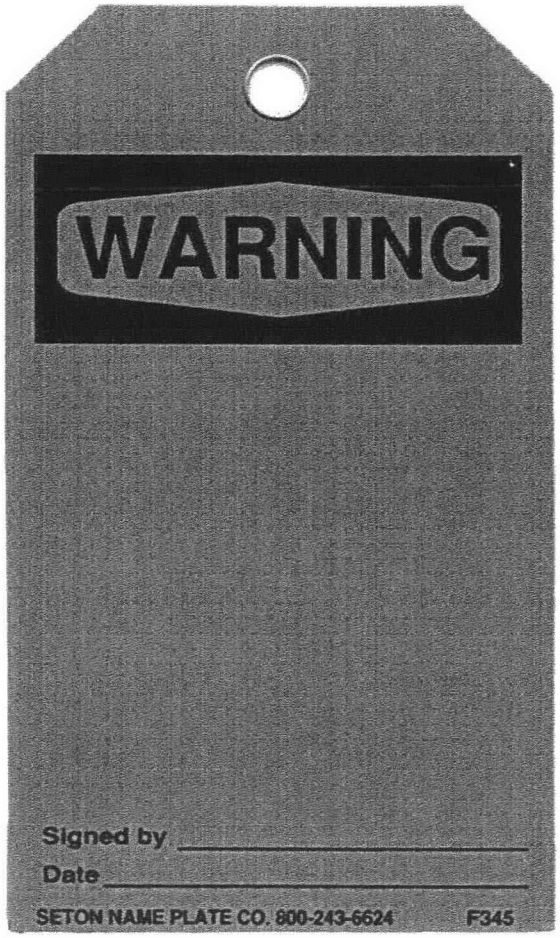

ATTACHMENT 2 – SAMPLE DUE DATE STICKER

Crane Pool

Annual Mobile Crane Inspection
Procedure 7-GN-179/ASME B30.5

Inspection Due Date: _____/_____
Month Year

Qualified Inspection: _____

APPENDIX 1 – WIRE ROPE ACCEPTANCE CRITERIA

The following criteria determine when a wire rope is no longer acceptable for service:

1. In running wire ropes, six randomly distributed broken wires in one lay or three broken wires in one strand in one lay. In rotation resistant wire ropes, two randomly distributed broken wires in six wire rope diameters or four randomly distributed broken wires in thirty wire rope diameters."

2. One outer wire broken at the point of contact with the core of the wire rope which has worked its way out of the wire rope structure and protrudes or loops out from the wire rope structure. Additional inspection of this section is required.

3. Wear of one-third the original diameter of outside individual wires.

4. Kinking, crushing, birdcaging, or any other damage resulting in distortion of the wire rope structure.

5. Evidence of any heat damage from any cause.

6. Reduction from nominal diameter of more than

   a. 1/64 inch for diameters to and including 5/16 inch

   b. 1/32 inch for diameters 3/8 inch to and including 1/2 inch

   c. 3/64 inch for diameters 9/16 inch to and including 3/4 inch

   d. 1/16 inch for diameters 7/8 inch to and including 1 1/8 inches

   e. 3/32 inch for diameters 1 1/4 inches to an including 1 1/2 inches

7. In standing wire ropes, more than two broken wires in one lay in sections beyond end connections or more than one broken wire at an end connection. (For inspection purposes, consider the area within two wire rope diameters of an end connection to be "at an end connection.")

APPENDIX 2 – SHANK HOOK

Two directions of discontinuities are labeled on drawing below as "P" and "T." Discontinuity P parallels the contour of hook and is considered non-serious in nature and does not require removal. Discontinuity T is transverse to contour of hook and is more serious in nature. Discontinuity T, when occurring in Zones B, C, or D, may reduce longevity of hook.

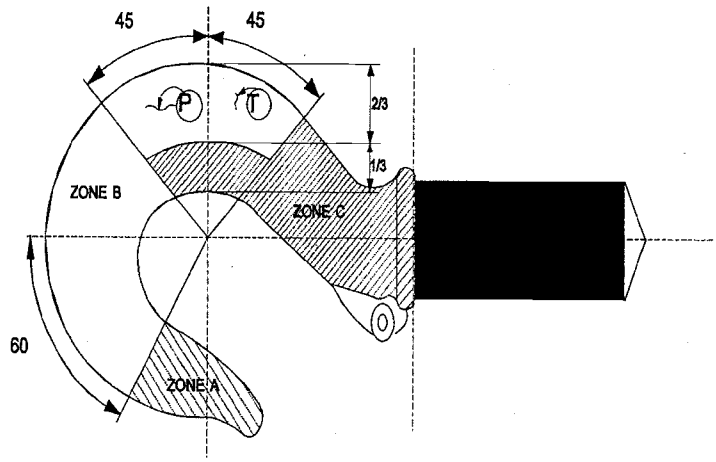

SHANK HOOK

APPENDIX 3 – TORQUE VALUE CHARTS

Wire Rope Clips, Type I

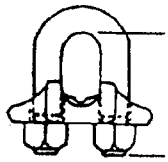

Clip size (inch)	Minimum number of clips	Amount of wire rope to turn back in inches	*Torque in feet (lb)
1/8	2	3-1/4	4.5
3/16	2	3-3/4	7.5
1/4	2	4-3/4	15
5/16	2	5-1/4	30
3/8	2	6-1/2	45
7/16	2	7	65
1/2	3	11-1/2	65
8/16	3	12	95
5/8	3	12	95
3/4	4	18	130
7/8	4	19	225
1	5	26	225
1-1/8	6	34	225
1-1/4	7	44	360
1-3/8	7	44	360
1-1/2	8	4	360
1-5/8	8	58	430
1-3/4	8	61	590
2	8	71	750
2-1/4	8	73	750
2-1/2	9	84	750
2-3/4	10	100	750
3	10	106	1,200
3-1/2	12	149	1,200

NOTES:
1. If a pulley (sheave) is used for turning back the wire rope, add one additional clip.
2. If a greater number of clips are used than shown in the table, the amount of turnback should be increased proportionally.
3. The number of clips shown is based upon using RRL of RLL wire rope 6 x 19 or 6 x 37 Class FC or IWRC; IPS or XIP. If Seale construction or similar large outer wire type construction in the 6 x 19 Class is to be used for sizes 1 inch and larger, add one additional clip. If a pulley (sheave) is used for turning back the wire rope, add one additional clip.
4. The number of clips shown also applies to rotation-resistant RRL wire rope, 8 x 19 Class, IPS, XIP, sizes 1-1/2 inch and smaller; and to rotation-resistant RRL wire rope, 19 x 7 Class, IPS, XIP, sizes 1-3/4 inch smaller.

*The tightening torque values shown are based upon the threads being clean, dry, and free of lubrication.

APPENDIX 4 – TORQUE VALUE CHARTS

Wire Rope Clamp Details, Type III

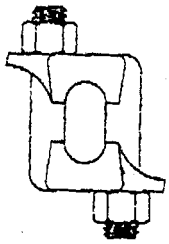

Clip size (inch)	Minimum number of clips	Amount of wire rope to turn back in inches	*Torque in feet (lb)
3/16	2	4	30
1/4	2	4	30
5/16	2	5	30
3/8	2	5-1/4	45
7/16	2	6-1/2	65
1/2	3	11	65
9/16	3	12-3/4	130
5/8	3	13-1/2	130
3/4	3	16	225
7/8	4	26	225
1	5	37	225
1-1/8	5	41	360
1-1/4	6	55	360
1-3/8	6	62	500
1-1/2	7	78	500

NOTES:
1. If a pulley (sheave) is used for turning back the wire rope, add one additional clip.
2. If a greater number of clips are used than shown in the table, the amount of turnback should be increased proportionally.
3. The number of clips shown (see Table 1) is based upon using RRL of RLL wire rope 6 x 19 or 6 x 37 Class FC or IWRC; IPS or XIP. If Seale construction or similar large outer wire type construction in the 6 x 19 Class is to be used for sizes 1 inch and larger, add one additional clip. If a pulley (sheave) is used for turning back the wire rope, add one additional clip.
4. The number of clips shown also applies to rotation resistant RRL wire rope, 8 x 19 Class, IPS, XIP, sizes 1-1/2 inch and smaller; and to rotation-resistant RRL wire rope, 19 x 7 Class, IPS, XIP, sizes 1-1/2 inch smaller.

*The tightening torque values shown are based upon the threads being clean, dry, and free of lubrication.

APPENDIX 5 –SAFETY INFORMATION

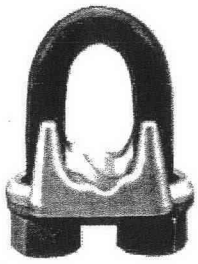

Crosby Clip

Important Safety Information

Read and Follow

Inspection/Maintenance Safety

- Always inspect socket, wedge and pin before using.
- Do not use part showing cracks.
- Do not use modified or substitute parts.
- Repair minor nicks or gouges to socket or pin by lightly grinding until surfaces are smooth. Do not reduce original dimension more than 10%. Do not repair by welding.
- Inspect permanent assemblies annually, or more often in severe operating conditions.
- Do not mix and match wedges or pins between models or sizes.
- Always select the proper wedge and socket for the wire rope size.

Assembly Safety

- Use only with standard 6 to 8 strand wire rope of designated size. For intermediate size wire rope, use next larger size socket. For example: When using 9/16" diameter wire rope use a 5/8" size Wedge Socket Assembly. Welding of the tail on standard wire rope is not recommended. The tail length of the dead end should be a minimum of 6 wire rope diameters but not less than 6".
- Align live end of wire rope, with center line of pin. (See Figure 1)
- Secure dead end section of wire rope. (See Figure 1)
- **DO** NOT **ATTACH DEAD END TO LIVE END.** (See Figure 2).
- Use a hammer to seat Wedge and Wire Rope as deep into socket as possible before applying first load.
- **To use with Rotation Resistant wire rope** (special wire rope constructions with 8 or more outer strands) ensure that the dead end is welded, brazed or seized before inserting the wire rope into the wedge socket to prevent core slippage or loss of wire rope lay. The tail length of the dead end should be a minimum of 20 wire rope diameters but not less than 6" (See Figure 1).

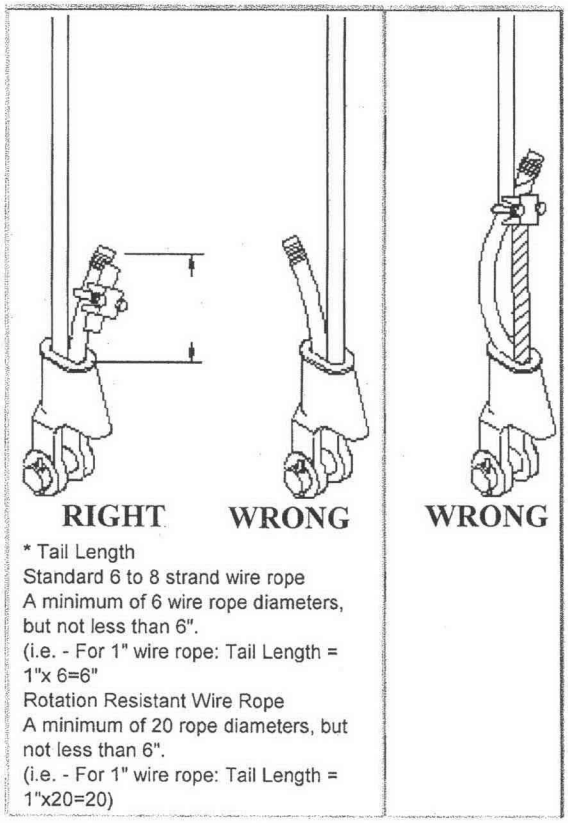

Figure 1 Figure 2

Operating Safety

- Apply first load to fully seat the Wedge and Wire Rope in the socket. This load should be of equal or greater weight than loads expected in use.
- Efficiency rating of the Wedge Socket termination is based upon the catalog breaking strength of Wire Rope. The efficiency of a properly assembled Wedge Socket is 80%.
- During use, do not strike the dead end section with any other elements of the rigging (Called two blocking).

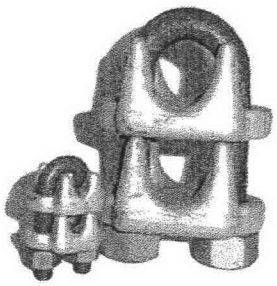

Piggyback Clip

Proper use of CM Big Orange Piggyback Wedge Socket Clips

1. Dead end wire rope tail length should be at least 6 wire rope diameters, but not less than 6 inches beyond the wedge socket.

2. Apply U-bolt and first saddle on dead end wire rope and the second saddle on live end wire rope. Install nuts.

3. Position the dual saddle clip so that 3 to 4 inches of dead end wire rope remain beyond the clip.

4. Tighten nuts evenly. Alternate tightening each nut until reaching the required torque specified.

5. Check that clip does not pinch or clamp the live wire rope. Apply an initial test load equal to the loads expected in regular use. Be certain wire rope is secured properly in the wedge socket prior to any use.

6. Inspect for proper wire rope alignment with wedge socket and retighten the nuts to the specified torque.

WARNING

Improper installation and use of the wedge socket clip can result in bodily injury or property damage.

To avoid injury and damage, use only as a dead end clip in conjunction with a wedge socket as directed. Read and follow instructions.

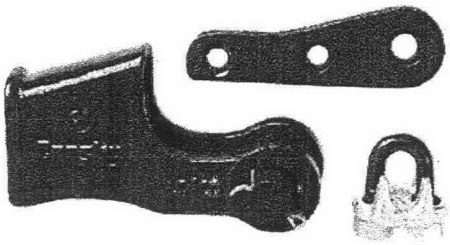

The Terminator™

Crosby's "New & Improved" Wedge Socket

WARNINGS AND APPLICATION INSTRUCTIONS

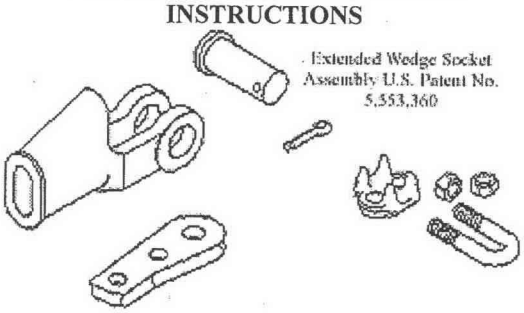

S-421T / US-422T
"TERMINATOR"™

NOTE: Existing Crosby S-421 Wedge Sockets can be retrofitted with the New Terminator Wedge.
New **QUIC CHECK®** "Go" and "No-Go" features cast into wedge. The proper size wire rope is determined when the following criteria are met: 1. The wire rope shall pass thru the "Go" hole in the wedge. 2. The wire rope shall NOT pass thru the "No-Go" hole in the wedge.

Important Safety Information - Read and Follow
Inspection/Maintenance Safety

- Always inspect socket, wedge and pin before using.
- Do not use part showing cracks.
- Do not use modified or substitute parts.
- Repair minor nicks or gouges to socket or pin by lightly grinding until surfaces are smooth. Do not reduce original dimension more than 10%. Do not repair by welding.
- Inspect permanent assemblies annually, or more often in severe operating conditions.
- Do not mix and match wedges or pins between models or sizes.
- Always select the proper wedge and socket for the wire rope size.

WARNING

- Loads may slip or fall if the Wedge Socket is not properly installed.
- A falling load can seriously injure or kill.
- Read and understand these instructions before installing the Wedge Socket.
- Do not side load the Wedge Socket.
- Apply first load to fully seat the Wedge and Wire Rope in the socket. This load should be of equal or greater weight than loads expected in use.
- Do not interchange wedges between S-421Tand US-422T or between sizes.

*Tail Length	
Standard 6 to 8 strand wire rope	**Rotation Resistant Wire Rope**
A minimum of 6 wire rope diameters, but not less than 6"	A minimum of 20 wire rope diameters, but not less than 6".

TABLE 1

Wire Rope Size	3/8	1/2	5/8	3/4	7/8	1	1 1/8
Clip Size	3/8	1/2	5/8	3/4	7/8	1	1 1/8
*Torque Ft./lbs.	45	65	95	130	225	225	225

* The tightening torque values shown are based upon the threads being clean, dry, and free of lubrication.

Assembly Safety

- Use only with standard 6 to 8 strand wire rope of designated size. For intermediate size wire rope, use next larger size socket. For example: When using 9/16" diameter wire rope use a 5/8" size Wedge Socket Assembly. Welding of the tail on standard wire rope is not recommended. The tail length of the dead end should be a minimum of 6 wire rope diameters but not less than 6" (See Figure 1).

- **To use with Rotation Resistant wire rope** (special wire rope constructions with 8 or more outer strands) ensure that the dead end is welded, brazed or seized before inserting the wire rope into the wedge socket to prevent core slippage or loss of wire rope lay. The tail length of the dead end should be a minimum of 20 wire rope diameters but not less than 6" (See Figure 1).
- Properly match socket, wedge and clip (See Table 1) to wire rope size.
- Align live end of wire rope, with center line of pin.
  (See Figure 1)
- Secure dead end section of wire rope. (See Figure 1)
- Tighten nuts on clip to recommended torque. (Table 1)
- Do not attach dead end to live end or install wedge backwards. (See Figure 2)
- **Use a hammer to seat Wedge and Wire Rope as deep into socket as possible before applying first load.**

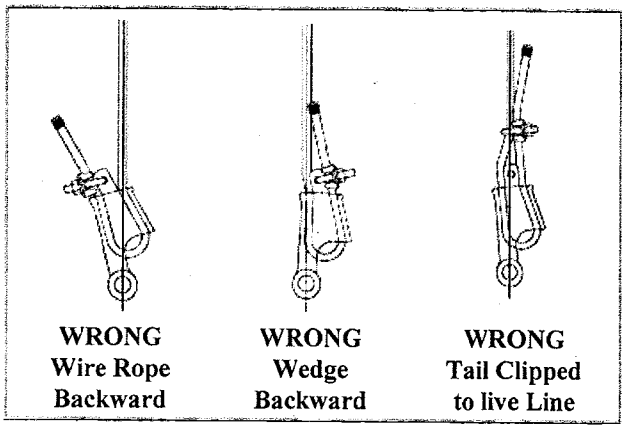

Figure 2

Operating Safety

- Apply first load to fully seat the Wedge and Wire Rope in the socket. This load should be of equal or greater weight than loads expected in use.
- Efficiency rating of the Wedge Socket termination is based upon the catalog breaking strength of Wire Rope. The efficiency of a properly assembled Wedge Socket is 80%.
- During use, do not strike the dead end section with any other elements of the rigging (Called two blocking).

DATA SHEET
(Sheet 1 of 7)

STEP	ITEM	COMMENTS	INIT.	DATE
7.2.1	Safety Guards/Mats			
7.2.2	Carrier Frame/Base			
7.2.3	General Hardware			
7.2.4	Block and Sheaves A. Record the main hook block weight and capacity. Weight: _____ / Capacity: _____ B. Record the auxiliary hook ball weight and capacity. Weight: _____ / Capacity: _____ Verify the above weights and capacities match what's identified in the operators' manual and or the load capacity charts that are in the operator's station. Yes, they do match. _____ No, they do not match. _____ C. Hook block and auxiliary hook ball tie-back slings and shackles. Yes, they are Ok_____ No, reject and replace_____ D. Hook tie-back mounting brackets on the crane used as the anchorage points. Yes, they are OK _____ No, reject and need repaired _____			
7.2.5	Boom and Jib Jib installed and inspected _____ Jib NOT installed, not inspected _____			
7.2.6	Gantry, Pendants, etc.			
7.2.7	Walkways, Ladders			
7.2.8	Tires, Wheels, Tracks			
7.2.9	Fluid Leaks			
7.2.10	Boom Length Indicator			
7.2.11	Outriggers, Devices			
7.2.12	Steering Linkage			
7.3.1	Cleanliness			
7.3.2	Engine/Compressor(s)			
7.3.3	Belt Wear, Cracks			
7.3.4	Class "A" Due Date_____ Class "B" Due Date_____			
7.3.5	Battery Condition			
7.3.6	Lights			
7.3.7	Glass/Windows			
7.3.8	Windshield Wipers			
7.3.9	Clutch/Brake Linkages			
7.3.10	Electric Motors			
7.3.11	Warning/Inst. Plates			
7.3.12	Fire Extinguishers			

Ironworker Print/signature _____ Date _____

Crane Operator Print/signature __ Date ___

Driver Print/signature _____ Date _____

Qualified Mobile Crane Inspector
Print/signature _____ Date _____

Hanford Operations HO#: _____#_____

DATA SHEET
(Sheet 2 of 7)

STEP	ITEM	COMMENTS	INIT.	DATE
7.4.1	Gauges			
7.4.2	Warning/Indic. Lights			
7.4.3	Oper. Controls/Brakes			
7.4.4	Oper. Visibility			
7.4.5	Load Rating Charts			
7.4.6	Safety Devices/LMI			
7.4.7	Emergency Stops			
7.4.8	List/Trim Indicators			
7.4.9	Boom Angle/Indicator/LMI			
7.4.10	Operators Manual			
7.5.1	Area Safety			
7.5.2	Start Engine			
7.5.3	Deploy Outriggers			
7.5.4	Note Unusual Noises			
7.5.5	Action of Controls			
7.5.6	Brakes, Boom, Load Handlg., Rotate Ops.			
7.5.7	Stability			
7.5.8	No-Load Operation			
7.5.9	Floating Sheave(s)			
7.5.10	Limit Switches			
7.6.1	Tires			
7.6.2	Brake Operation			
7.6.3	Vehicle Lights			
7.6.4	Horn			
7.6.5	Windshield Wipers			
7.6.6	Mirrors			

Ironworker
Print/signature _____ Date _____

Crane Operator
Print/signature _____ Date _____

Driver
Print/signature _____ Date _____

Qualified Mobile Crane Inspector
Print/signature _____ Date _____

Hanford Operations HO#: _____#_____

DATA SHEET
(Sheet 3 of 7)

STEP	ITEM	COMMENTS		INIT.	DATE
7.6.7	Heater, Fan, A/C				
7.6.8	Glass Condition				
7.6.9	Seat Belt(s)				
7.6.10	Interior Condition				
7.7.1	Hook Inspection	MAIN BLOCK	AUX. BALL		
	A. Wear				
	B. Cracks				
	C. Corrosion				
	D. Deformation				
	E. Latch				
	Attachment				
7.7.3	Remove YES_____NO_____ Reason for removal_____				
		Main Line	Auxiliary Line		
7.7.5	Ensure Qualification				
7.8.1.A.1	Core support				
.2	Corrosion				
.3	Wear				
B.1	Broken wires				
.2	Worn wires				
.3	End connections				
.4	Improperly applied				
.5	Severe kinking etc.				
C.	Lubrication				
D.	Heat damage				
E.1	Saddles etc.				
.2	Terminal ends				
7.8.2	Replace Wire Rope?				
7.9	Document Replacement	See Data Sheet 7			

Ironworker Print/signature _____ Date _____

Crane Operator Print/signature _____ Date _____

Driver Print/signature _____ Date _____

Qualified Mobile Crane Inspector
Print/signature _____ Date _____

Hanford Operations HO#: _____#_____

DATA SHEET (Sheet 4 of 7)
HOOK IDENTIFICATION RECORD
MAIN BLOCK HOOK

Inspection Date _____ Crane Location/Bldg. _____

Crane Hanford Operations HO#: __#_____

Hook Dimension "A" _____ Hook Dimension "B" _____

Hook Dimension "C" _____

Caliper Serial No. _____ Cal. Due Date _____

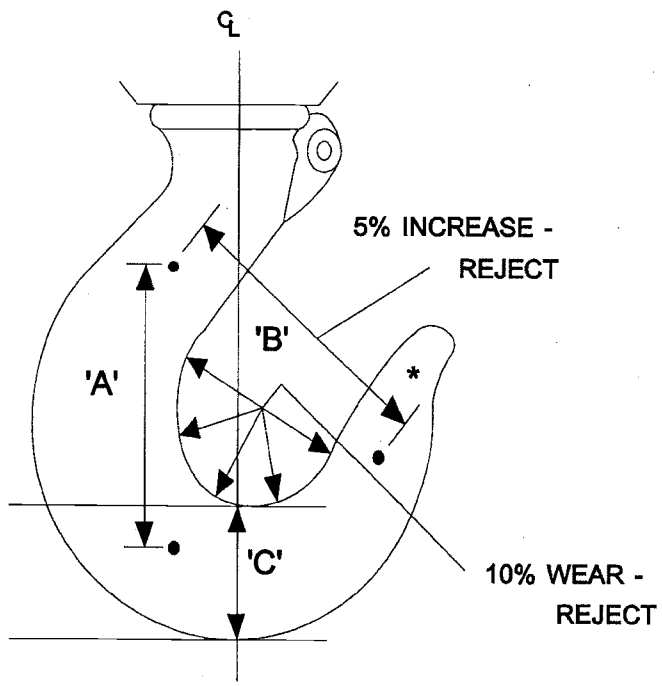

HOOK INSPECTION INFORMATION

1. The measurement between 'A' punchmarks is a reference standard to compare this dimension with. Hooks with manufacture indicators also may be used for quick check measurement of the throat opening.

DATA SHEET (Sheet 5 of 7)
HOOK IDENTIFICATION RECORD
AUXILIARY BLOCK HOOK

Inspection Date _____ Crane Location/Bldg. _____

Crane Hanford Operations HO#: #_____

Hook Dimension "A" _____ Hook Dimension "B" _____

Hook Dimension "C" _____

Caliper Serial No. _____ Cal. Due Date _____

Hook NDE Accept _____ Reject _____ Date _____

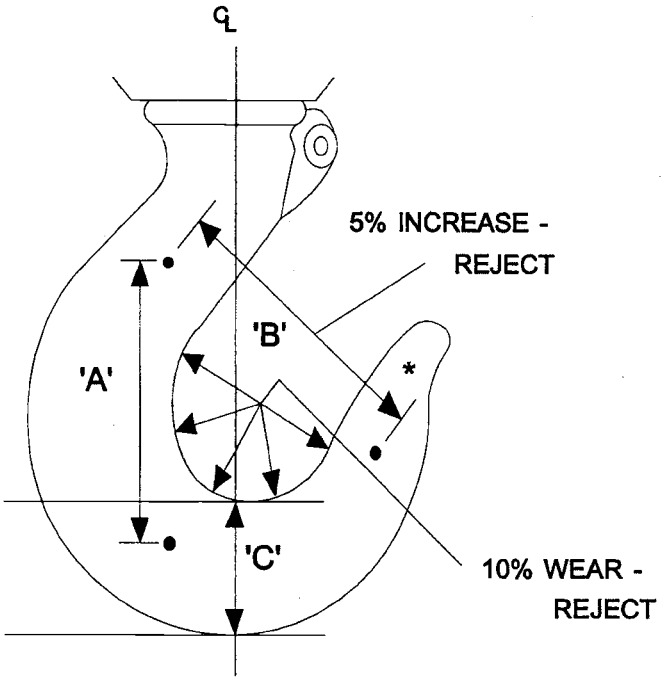

HOOK INSPECTION INFORMATION

1. The measurement between 'A' punchmarks is a reference standard to compare this dimension with. Hooks with manufacture indicators also may be used for quick check measurement of the throat opening.

DATA SHEET (Sheet 6 of 7)
WIRE ROPE INSPECTION RECORD

Inspection Date	Location of Wire Rope	Measured Dia.	Broken Wires			End Attachments			Wire Rope Damage	Sheave Cond.	Drum Cond.
		Reference Note below	In 1 Wire Rope Lay	In 1 Strand of 1 Lay	Valleys	Broken Wires	Corro-sion of Wire Rope	Fitting Cond.			
	Main Hoist										
	Secondary Hoist										
	Boom Pendants										
	Other:										

COMMENTS: _____

_____

_____

_____

_____

_____

_____

NOTE: Record Dial Caliper Calibration No.: _____ # _____ Due Date: _____

Qualified Wire Rope Inspector
Print/signature _____ Date _____

Hanford Operations HO#: _____ # _____

DATA SHEET
(Sheet 7 of 7)

7.9 - WIRE ROPE REPLACEMENT CHECKLIST

EQUIPMENT IDENTIFICATION AND LOCATION:

Date of replacement wire rope installation: _____

Wire Rope Manufacturer: _____

Diameter: _____ Strands: _____ Wires/strand: _____ Lay: _____

Wire rope purchase order number: _____

Grade of wire: _____ Type core: _____ Nominal strength: _____

PRIOR TO INITIAL LOAD CYCLE	**INIT.**	**NA**
Wire rope attachment points properly installed		
Fasteners properly torqued Record torque value at dead end: _____ Record torque value at drum attachment: _____ (If so required) Record torque wrench Calibration No. _____		
Mobile Crane: Neither the load or the boom shall be lowered below the point where less than two full wraps of wire remain on the drum.		
Reeving in accordance with manufacturer's recommendation		
INITIAL LOAD CYCLE	INIT.	NA
Initial load cycle performed (maximum down to maximum up position 8 to 10 times with 10 to 20% of rated load)		
AFTER INITIAL LOAD CYCLE, inspect wire rope attachment points (drum and dead end) and retorque		
Wire rope manufacturer's certification placed in equipment history file		

COMMENTS/REMARKS: _____

_____

_____

Qualified Wire Rope Inspector: _____
(Print Name) (Signature) (Date)

- Place completed form in Maintenance History File -

Enclosure 4

CRANE POOL ANNUAL CRANE INSPECTION

Consisting of 2 pages, including coversheet

Crane Pool

Monthly Mobile Crane & Wire Rope Inspection

Procedure 7-GN-068/ASME B30.5

Inspection Due Date: _____ / _____
Month Year

Qualified Inspector: _____

FH Sign Shop 373-5682 Reorder No. G801401

Crane Pool

Annual Mobile Crane Inspection

Procedure 7-GN-179/ASME B30.5

Inspection Due Date: _____ / _____
Month Year

Qualified Inspector: _____

FH Sign Shop 373-5682 Reorder No. G801401.B

Enclosure 5

MOBILE CRANE RENTAL FLEET

Consisting of 5 pages, including coversheet

Fluor Hanford	DEPARTMENT PROCESS INSTRUCTION	Function Site Crane & Rigging Services	
Performed By: Site Crane & Rigging Services	Approved By: Stan M. Holloman 12/05/08 Manager, Site Crane & Rigging Services Date	Number CRANE-DPI-06	
		Rev. 0	Page 1 of 4
Task **Mobile Crane Rental Fleet**		Effective Date 12/05/08	

MOBILE CRANE RENTAL FLEET

1.0 PURPOSE

This Department Process Instruction (DPI) establishes the requirements and responsibilities for the mobile crane rental fleet and its policy for renting mobile cranes. Mobile cranes will be maintained, serviced and be made available for use through the crane pool coordinator. All efforts will be made to provide the size and type of machine necessary to perform specific crane work.

2.0 REQUIRMENTS

The Site Crane & Rigging Services crane pool coordinator is the single point of contact for all transactions in the renting of mobile cranes. The crane pool coordinator will make every effort to provide cranes when needed. Management may be required to set scheduling priorities due to lack of equipment resource.

Mobile cranes shall be issued and be returned in good working condition. Any costs associated with damage other than normal operating wear (due to proven negligence) shall be the responsibility of the customer.

This information will be provided to mobile crane rental customers.

3.0 PERSONNEL REQUIREMENTS

- Qualified Mobile Crane Operator
- Mobile Crane Equipment Custodian
- Crane and Rigging Management
- Qualified mobile crane Inspector
- Crane and rigging planner

4.0 PRECAUTIONS AND LIMITATIONS

- Contact the mobile crane equipment custodian or the person-in-charge for additional instructions if changing plant conditions affect work or delays in work extend past end of shift or on the weekends.
- Observe safety rules in accordance with DOE-RL-92-36, Hanford Site Hoisting and Rigging Manual. If the mobile crane is a regulated piece of equipment, contact your supervisor for special requirements prior to start of work. A personal survey may be required at the completion of work.
- The mobile crane operator shall ensure all inspections are current before operating the mobile crane. The mobile crane operator must ensure that the periodic mobile crane & wire rope inspection sticker is posted in the operator's station and is current. Reference "Inspection due date sticker" page 4 of 4.

5.0 RESPONSIBILITIES

- The mobile crane pool fleet is managed by Fluor Hanford Site Crane & Rigging Services organization. All mobile crane activities including renting, repair and preventive maintenance must be coordinated through the crane pool coordinator.
- Customers requesting a mobile crane should coordinate with the crane pool coordinator to ensure crane type and size is evaluated against the work to be performed to ensure that the right crane needed to perform the work is used.
- Cranes shall be returned to the 6290 or MO-235 crane yard upon completion of use unless other arrangements are made with the crane pool coordinator. If a crane cannot be brought back or released from a radiological area the customer will be billed until the crane can be released.
- The crane pool coordinator is responsible for the scheduling of maintenance and inspections.
- Cranes identified with safety significant item(s), will be identified on the 7-GN-097 maintenance procedure data sheet which is located in the crane cab. A "WARNING" tag which is also located in the crane cab will be affixed by the mobile crane inspector, equipment custodian or Site Crane & Rigging Services supervisor. The warning tag must have a legibly written description of the item(s) found deficient and be signed and dated by the individual identifying the deficiencies. The tag shall be secured to the crane steering wheel/controls located in the operators cab on a rough terrain or crawler-mounted crane, and the drivers' cab steering wheel of a truck-mounted crane. Any deficiency shall be reported to the crane pool coordinator or Site Crane & Rigging Services management. "WARNING" tags will be removed by authorized personnel only. 7-GN-097
- When the Due date of the Class "A" expires the crane shall be tagged out of service until the maintenance shop completes the Class "A" inspection. The Class "B" inspection is lubrication, air filter inspection/change and oil/filter change, and the crane may used beyond the due date, but should promptly be rescheduled for completion.

- It is the customer's responsibility to ensure the use of a regulated crane is in accordance with HNF-PRO-330, *Radiologically Controlled Vehicles or applicable Tank Operating Contractor procedure.*

6.0 PAYMENT BILLING

The customer is responsible for providing appropriate documentation for billing purposes. Before equipment will be released for use the customer must provide in writing the request for equipment and a current control account charge number (CACN).

7.0 TESTING AND ACCEPTANCE

- Cranes shall be load tested prior to initial use or after load bearing parts have been altered, replaced, or repaired. Fleet Maintenance shall determine if load testing is required after repairs are made. The crane pool coordinator is responsible for scheduling the test and documenting the test results.

8.0 ATTACHMENTS

- "WARNING" Tag
- "Inspection due date sticker"

Warning Tag

Crane Pool

Periodic Mobile Crane
& Wire Rope Inspection
Procedure 7-GN-068/ASME B30.5

Inspection Due Date: _____ / _____
Month **Year**

Qualified Inspector: _____

Inspection Due Date Sticker

Enclosure 6

OPERATING ERRORS – 75 TON – 95 TON CRANES

Consisting of 3 pages, including coversheet

75 TON - 90 TON CRANES

8.3 OPERATING ERRORS

Malfunctions in the system which are caused by range exceeding or operating errors by the crane operator himself are indicated on the display together with an explanation. These error codes are E01, E02, E03, E04, E05, E18 and E83 and they can normally be eliminated by the crane operator himself.

Error Code	Cause	Elimination
E01	Fallen below the minimum radius or above the angle given in the load capacity chart due to luffing up the boom too far.	Boom down to a radius or angle given in the load capacity chart.
E02	The maximum radius or minimum angle given in the load capacity chart was exceeded due to luffing down the boom too far.	Boom up to a radius or angle given in the load capacity chart.
E03	Boom position is out of the permissible working area (over front).	Move boom back to the permissible working area. See lifting diagram in the load capacity charts.
E04	Operating mode switch in the console incorrectly set.	Correctly set operating mode switch to the code assigned to the operating mode of the crane.
	Operating mode is not permissible with the actual crane configuration, boom position or area definition.	Be sure crane is set up according to proper operating configurations.
E05	Boom was telescoped too far or not far enough, you may only operate up to a certain maximum or minimum boom length or with load curves for boom extension where you have to telescope the main boom to a certain length.	Telescope boom to correct length, given in the load capacity chart.
	Length sensor adjustment changed i.e. length sensor cable slid off the length sensor drum.	For elimination refer to service manual.
E18	Front outrigger overloaded	Refer to load capacity charts.
E83	The Center Mid is not on its fully extended position while the OM/Fly is not completely retracted.	▪ Extend the Center Mid ▪ Retract the OM/Fly ▪ Check the OM/Fly switch (dig. input 4)
flashing ...% (tele.)	Telescope is out of the permissible sequence.	▪ Fully retract telescope
ECO	Prohibited area Boom is about to collide with the engine hood, switch off	Move boom to permitted area

Error Code	Cause	Elimination
EC1	Approaching prohibited area Boom is about to collide with the engine hood, prewarning	Move boom to permitted area

Enclosure 7

TFC-ENG-FACSUP-C-25, *HOISTING AND RIGGING*

Consisting of 16 pages, including coversheet

Ownership matrix

TABLE OF CONTENTS

1.0 PURPOSE AND SCOPE 2
2.0 IMPLEMENTATION 2
3.0 RESPONSIBILITIES 2
4.0 PROCEDURE 2
- 4.1 General Instructions 3
- 4.2 Critical and Special Lifts 4
- 4.3 Lifting Point Inspection Preparation for Critical and Special Lifts 7
- 4.4 Field Inspection 7
- 4.5 Structural Analysis 8
- 4.6 Inspection of Existing Permanently Installed Lifting Points 8

5.0 DEFINITIONS 10
6.0 RECORDS 10
7.0 SOURCES 10
- 7.1 Requirements 10
- 7.2 References 10

TABLE OF FIGURES

Figure 1. Verification of Lifting Point Structural Integrity Process. 12
Figure 2. Inspection of Permanent Lifting Points Process. 15

1.0 PURPOSE AND SCOPE

This procedure defines the process for conducting hoisting and rigging activities for WRPS. It also provides instructions for preparing hoisting and rigging instructions (e.g., critical or special lift determination (A-6003-884), critical lift plans, and special lift instructions).

This procedure defines the process to ensure the structural integrity of permanently installed lifting points.

Hoisting and Rigging activities within the scope of this procedure must comply with DOE-RL-92-36, "Hanford Site Hoisting and Rigging Manual."

2.0 IMPLEMENTATION

The procedure is effective on the date shown in the header.

3.0 RESPONSIBILITIES

Responsibilities are contained within Section 4.1- 4.6.

4.0 PROCEDURE

1. Temperature control limits must be applied to lifting operations as follows:

   - No lifts will be performed in temperatures below 10°F (RPP-9551).
   - Rigging hardware used to perform lifts in temperatures below 30°F must have approval from the equipment manufacturer (Hanford Site Hoisting and Rigging Committee Bulletin, March 8, 2004).
   - To obtain specific temperature limitation information contact a qualified Rigging Engineer.

2. Outrigger pads must be used for all WRPS work activities requiring the use of a mobile crane. This provides greater ground stability for the crane and protection of equipment. Minimum requirements for the use of outrigger pads are as follows:

   - Minimum 2 feet square pads for 22-ton and smaller cranes
   - Minimum 3 feet square pads for cranes greater than 22-ton and up to 90-ton
   - Minimum 4 feet square pads for Grove 110-ton crane.

   The Rigging Engineer may waive the outrigger pad requirement based on review of the lift procedure or instruction, crane load charts, and RPP-CALC-25074.

3. For lifts in close tolerance situations where the potential exists for the load to be stuck, hung up, or otherwise come in undesired contact with other components or structures, the use of finer control of the load shall be employed. In such cases, a below-the-hook load indicating device (LID), manually operated chain hoist between the crane hook and the load, and/or use of radios or other means of positive communication are a few suggested methods to help meet this requirement.

4. When a mobile crane is initially set up or reconfigured (e.g., re-reeving wire rope and/or installing the jib) a full range operational check (no load) in the exact configuration, as will be used, shall be performed prior to making the actual lift or series of lifts. (Lesson Learned IB-08-048)

4.1 General Instructions

Field Work Supervisor

1. Coordinate and supervise performance of planned lifts.

2. Verify that the hoisting and rigging contractor has inspected and evaluated all lifting points as required by DOE-RL-92-36 and that all concerns have been adequately addressed and documented in the work package. Contact a qualified Rigging Engineer for any additional lifting point concerns.

3. Verify that required tags have been installed and the information on the tags is correct.

4. Ensure all other lifting bail tags that are not in accordance with this procedure are removed.

5. Ensure pre-job briefings are performed in accordance with TFC-OPS-MAINT-C-02.

6. Ensure all lifts are performed in accordance with applicable procedures, instructions, and DOE-RL-92-36.

7. For all special lifts, ensure that form A-6003-884 is complete and all required signatures are present before performing the lift.

8. Ensure all field revisions to critical lift plans are made in accordance with DOE-RL-92-36. Field revisions to special lift plans require the approval of the Field Work Supervisor and the Rigging Engineer

9. Verify the crane load chart rating and crane capacity in the intended configuration with the DL and crane operator prior to conducting the lift. If the load being lifted is 80% or more of the crane's maximum rated capacity or 90% or more of the crane's load chart capacity then ensure a critical lift plan is used to perform the lift.

Quality Assurance

10. For first time lifts of cover blocks, ensure tags are installed on each cover block listing the following information:

    - Work order number
    - Weight of component in pounds
    - Key block (if applicable)
    - Test date.

    NOTE: Tagging of any other items (cover plates, shield plugs, etc.) is at the discretion of the system/component engineer.

Designated Leader

11. Perform pre-lift and pre-job requirements in accordance with DOE-RL-92-36 and TFC-OPS-MAINT-C-02.

12. Perform all lifts as designed and approved.

13. Ensure Page 3 of A-6003-884, Riggers and Operators Field Verification Checklist, is completed and approved for all special lifts prior to the lift being performed. This checklist is not required for critical lifts.

4.2 Critical and Special Lifts

Facility Manager/ Project Manager

1. Determine facility or project hoisting and rigging needs and scheduled work activities.

   A lift shall be designated critical based on the following criteria. In addition, any lift not subject to the following criteria may be designated critical as determined by the facility or project manager:

   a. Loss of control of the item being lifted would likely result in declaration of a "Site Area Emergency" or "General Emergency" as defined in the facility emergency plan or construction site emergency plan. (If the lift is not specifically addressed in a "Site Area Emergency" or "General Emergency" Emergency Action Level (EAL) and it could impact a facility or equipment containing radiological or toxicological material, consult with Nuclear Safety)

   b. The item being lifted is unique and, if damaged, would be irreplaceable or not repairable and is vital to a system, facility, or project operation.

   c. The cost to replace or repair the item being lifted, or the delay in operations of having the item damaged would have a negative impact on facility, organizational, or DOE budget to the extent that it would effect program commitments.

   d. The item, although non-critical, is to be lifted above or in close proximity to a critical item or component (e.g., a DST primary ventilation system).

   e. The load being lifted is 80% or more of a mobile crane's gross load chart rating (total maximum capacity of the crane) or 90% or more of the crane's load chart rating in any configuration for the maximum radius to be experienced. In this situation the radius shall be verified by actual measurement and not by the LMI alone.

   f. Two mobile cranes are lifting the load and the load share equals more than 70% of one or both crane's chart rating for the maximum radius that will be experienced.

2. If a lift is considered critical or special, complete and sign the Lift Instructions Determination form (A-6003-884).

3. Relay to the area task planner the proposed hoisting and rigging needs and requirements.

Planner

4. Coordinate development of the Critical Lift Plan or Special Lift Instructions in accordance with the guidelines set forth in the Lift Instructions Determination (A-6003-884) and this procedure.

5. As a minimum, ensure critical lift plans contain approval signatures from the following personnel:

   - Technical Approver – Qualified person having technical knowledge of the hoisting and rigging equipment, as designated by the responsible hoisting and rigging contractor
   - Qualified Rigging Engineer
   - Responsible Field Work Supervisor (FWS)
   - Qualified Occupational Safety Representative – normally a field safety representative
   - Responsible manager – normally the facility or project manager.

   Additional signatures may be added as required by the facility or project manager.

6. Include the original Critical Lift Plan as part of the work package as the implementing document for the pre-job briefing and performance of the lift(s).

7. For development of special lift instructions, coordinate completion of the Lift Instructions Determination form (A-6003-884).

Manager responsible for lift/Rigging Engineer/System Engineer

8. Complete the Lift Instructions Determination form (A-6003-884). Once completed, this form, along with any sketches and/or additional information, will serve as the Special Lift Instruction and is inserted into the work package as such.

   NOTE: Special conditions are included in the form, which is used to capture necessary information to be included in the work package, such as removing cover blocks, performing inspection, replacing cover blocks, and use of items such as spacers and spreader beams.

Planner	9.	Ensure that the completed form (A-6003-884) contains the required signatures and is delivered to the hoisting and rigging contractor for development of the critical lift plan or added directly to the work package as the special lift instruction. • Page 3 of A-6003-884, Riggers and Operators Field Verification Checklist, is required for all special lifts and must be included in the work package for those lifts. • The Riggers and Operators Field Verification Checklist is not required for critical lifts and should be discarded prior to entering A-6003-884 into the work package for critical lifts.
Critical Lift Procedure Preparer (Author)	10.	Using the completed and approved A-6003-884 form as guidance and direction, prepare the Critical Lift Plan and return it to the facility/project planner.
Planner	11.	Submit the work package for approval in accordance with TFC-OPS-MAINT-C-01.
	12.	Complete all applicable post-lift documentation. NOTE: Documentation for critical and special lifts is retained in CHAMPS/IDMS as part of the completed work package. This satisfies the applicable requirements in Section 3.7 of DOE-RL-92-36.
Rigging Engineer	13.	Ensure that critical lift plans and special lift instructions include the following statement when applicable: "Engineering has established the Recommended Not-To-Exceed Lifting Pull limit as xxxx lbs." NOTE: This applies to lifting items that may be rusted in place or otherwise potentially stuck.
	14.	For critical and special lifts, if test documentation is not available for permanently installed rigging hardware, ensure that appropriate supporting calculations, design media, inspection requirements, torque requirements, and hoisting and rigging requirements are included prior to approving the critical lift plan/special lift instructions.
	15.	Review the critical lift plan or special lift instruction and determine if it is ready for implementation. a. If it meets conditions for approval, sign and return the plan/instruction to the planner. b. If it does not meet conditions for approval, return the plan/instruction to the planner with recommendations for revision.

Safety & Health	16.	Perform functions as the "responsible Safety organization" in accordance with DOE-RL-92-36.
	17.	Ensure subcontractor's critical lift plans and critical lifts they perform are approved by the subcontractor's internal safety organization prior to approval.
	18.	Review and approve by signing the Critical Lift Plan.

4.3 Lifting Point Inspection Preparation for Critical and Special Lifts

The process for verification of lifting point structural integrity is shown in Figure 1.

Lifting point inspections shall be performed using a graded approach. Cover blocks/cover plates with permanently installed lifting points shall be inspected using Section 4.6, and evaluated using RPP-8360. Shield plugs shall be inspected and evaluated as determined by the system/ component engineer. Non-analyzed shield plugs should be lifted using a spacer. Items to be lifted will be inspected and evaluated in accordance with DOE-RL-92-36 by the hoisting and rigging contractor, including lift points under multiple (stacked) cover blocks or where lifting points are difficult to access. The need for additional inspection and evaluation is at the discretion of the rigging engineer, the system engineer, or the component engineer.

NOTE: Cover blocks/cover plates that will not be lifted over tank farm structures (such as underground storage tanks, catch tanks, double-contained receiver tanks) and are not considered critical or special lifts only require inspection and evaluation by the hoisting and rigging contractor per DOE-RL-92-36.

Field Crane Coordinator	1.	Ensure lift schedule is available to the system/component and hoisting and rigging engineers.
System/Component Engineer	2.	Follow TFC-ENG-DESIGN-D-37; provide supporting documentation to planner, as needed.
Planner	3.	Prepare a field inspection folder, if requested by the system/ component engineer, containing pertinent lifting point drawings, Engineering Change Notices (ECNs), and a blank Lifting Point Field Inspection Report for each lifting point.
	4.	Ensure that the work order supports the field inspection.

4.4 Field Inspection

Quality Assurance	1.	If required by Engineering, perform field inspections in accordance with Section 4.6.
		a. Ensure that traceability is maintained between inspection documents and the inspected lifting point (e.g., tags).
		b. Deliver the Lifting Point Field Inspection Report to the system/component engineer.

System or Component Engineer	2.	Evaluate the field inspection report (in accordance with TFC-ENG-DESIGN-D-37), and based on findings, perform the required actions to ensure that the identified lifting points can be safely used.
Rigging Engineer	3.	Evaluate corrective actions and approve ECNs in accordance with TFC-ENG-DESIGN-D-37.

4.5 Structural Analysis

System or Component Engineer	1.	Perform structural analysis and determine lifting points in accordance with TFC-ENG-DESIGN-D-37 and provide data to planner.
Engineering Discipline Lead - Civil/Structural Discipline	2.	Determine the type of calculation required in accordance with TFC-ENG-DESIGN-C-10. A letter of appointment may be issued to identify approved alternates for this determination.
Analyst	3.	Perform structural evaluation of lifting points in accordance with TFC-ENG-DESIGN-C-10 and RPP-8360.
System or Component Engineer	4.	Based on the structural evaluation, determine if the lifting point(s) is adequate to lift the intended item (e.g., cover block, cover plate, shield plug) and verify tags are in place as applicable (see Section 4.4, step 16). a. If adequate, notify the planner and provide the planner with a copy of the analytical calculations. b. If inadequate, contact the Engineering Discipline Lead - Civil/ Structural, for a resolution (RPP-9514).
Analyst	5.	Record analysis as required by TFC-ENG-DESIGN-C-10. Document computational calculations on A-6003-884, item 9.
	6.	Record inspection report results and analysis into the Integrated Data Management System (IDMS) Lifting Point database per TFC-ENG-DESIGN-D-27.

4.6 Inspection of Existing Permanently Installed Lifting Points

This section ensures that lifting points are inspected and that the inspection findings are correctly provided in the evaluation package (see Figure 2).

NOTE: The Lifting Point Field Report (site form A-6003-764 or A-6003-765) records the observed condition of existing lifting points for comparison to lifting point design documentation and supporting calculations.

System/Component Engineer	1.	Evaluate if Quality Assurance (QA) field inspection is needed.

2. If the decision is made to not use QA field inspection, photograph the lifting point(s).

3. Document observations in Lifting Point Field Report By Engineer (A-6003-764) as well as Field Inspection Document Index (A-6003-766).

4. If a decision is made to use QA field inspection (A-6003-765), prepare inspection folder.

Quality Assurance Technician

5. If measuring and test equipment will be used in the inspection process, record the manufacturer, model, serial number, and calibration status in Section 6.0 of A-6003-765.

6. Using the documents specified by the planner in the Field Inspection Document Index (A-6003-766), perform an inspection of each lifting point e.g., cover block, cover plate, shield plug, identified.

7. To the maximum extent practicable, complete an inspection report for each lifting point.

   a. If any part of the QA inspection (A-6003-765) cannot be completed, record the reason for non-completion on the Lifting Field Inspection Report (A-6003-765) and appropriately annotate the steps that will not be completed.

   b. If corrosion is present, other than superficial surface rust, inform the system engineer.

   c. Submit the completed Lifting Point Field Inspection Report to the system/component engineer.

   NOTE: The lifting point inspection report, by itself, does not determine if a lifting point is safe to use.

System/Component Engineer

8. Review the Lifting Point Field Inspection Report for completeness and accuracy.

9. Determine if additional inspection or Non-Destructive Examination (NDE) is required and specify any additional inspection or NDE in Section 5.0 of the Lifting Point Field Inspection Report form (A-6003-769).

10. Return the Lifting Point Field Inspection Report to Quality Assurance if additional inspection or NDE is required.

    NOTE: All additional inspection and/or NDE results shall be noted and recorded on the Lifting Point Field Inspection Report.

11. Sign the Lifting Point Field Inspection Report when the report is complete, and forward the report to an analyst and put an electronic copy into IDMS.

5.0 DEFINITIONS

First time lift. Any lift performed on a cover block that does not have a weight tag installed in accordance with this procedure.

Outrigger pad. Blocking which is placed under a crane's outrigger floats to provide greater stability for the crane.

Permanently installed lifting point. Any lifting point that is a permanent part of the item to be lifted or a lift point that is left in place on the item to be lifted.

Temporary installed lifting point. Lifting points installed for specific lifts and subsequently removed. These lift points are considered rigging hardware and are addressed by DOE-RL-92-36 (e.g., temporarily installed swivel hoist rings and shouldered eye bolts).

6.0 RECORDS

The following records are generated during the performance of this procedure:

Record Description	Vital Record Y/N	QA Record Y/N	QA Record Retention L/NP	NARA Retention Schedule	Other Retention Requirements	Records Custodian
Work Order	Y	Y	Y	ENV-1.d8a	N/A	Planning
Hoisting and Rigging: Lift Instructions Determination form (A-6003-884)	N	N	N	ENV-1.d8a	N/A	Planning

The identified record custodian is responsible for record retention in accordance with TFC-BSM-IRM_DC-C-02.

7.0 SOURCES

7.1 Requirements

1. HNF-SD-WM-TSR-006, "Tank Farms Technical Safety Requirements," Administrative Control 5.7, "Safety Management Programs."

2. TFC-PLN-40, "Hoisting and Rigging Safety Management Program Plan."

7.2 References

1. DOE-RL-92-36, "Hanford Site Hoisting and Rigging Manual."

2. Hanford Site Hoisting and Rigging Committee Hoisting and Rigging Bulletin, "Eyebolt and Swivel Hoist Ring Temperature Limitations," March 8, 2004.

3. HNF-IP-1266, "Tank Farm Operations Administrative Controls," Section 5.7, "Safety Management Programs, "Section 3.C.2K, "Hoisting and Rigging."

4. RPP-8360, "Lifting Bail Evaluation Process."

5. RPP-9551, "Qualification Test of the Bail Repair Assembly & Bail Load Testing."

6. RPP-16330, "Standard Lifting Point Rated Load Capacities."

7. RPP-CALC-25074, "Crane Outrigger Pad loads over Waste Transfer Lines."

8. TFC-BSM-IRM_DC-C-02, "Records Management."

9. TFC-ENG-DESIGN-C-06, "Engineering Change Control."

10. TFC-ENG-DESIGN-D-27, "Electronic Information Files."

11. TFC-ENG-FACSUP-C-23, "Equipment Identification and Data Management."

12. TFC-OPS-MAINT-C-01, "Tank Operations Contractor Work Control."

13. TFC-OPS-MAINT-C-02, "Pre-Job Briefings."

14. TFC-PLN-40, "Hoisting and Rigging Safety Management Program."

Figure 1. Verification of Lifting Point Structural Integrity Process.

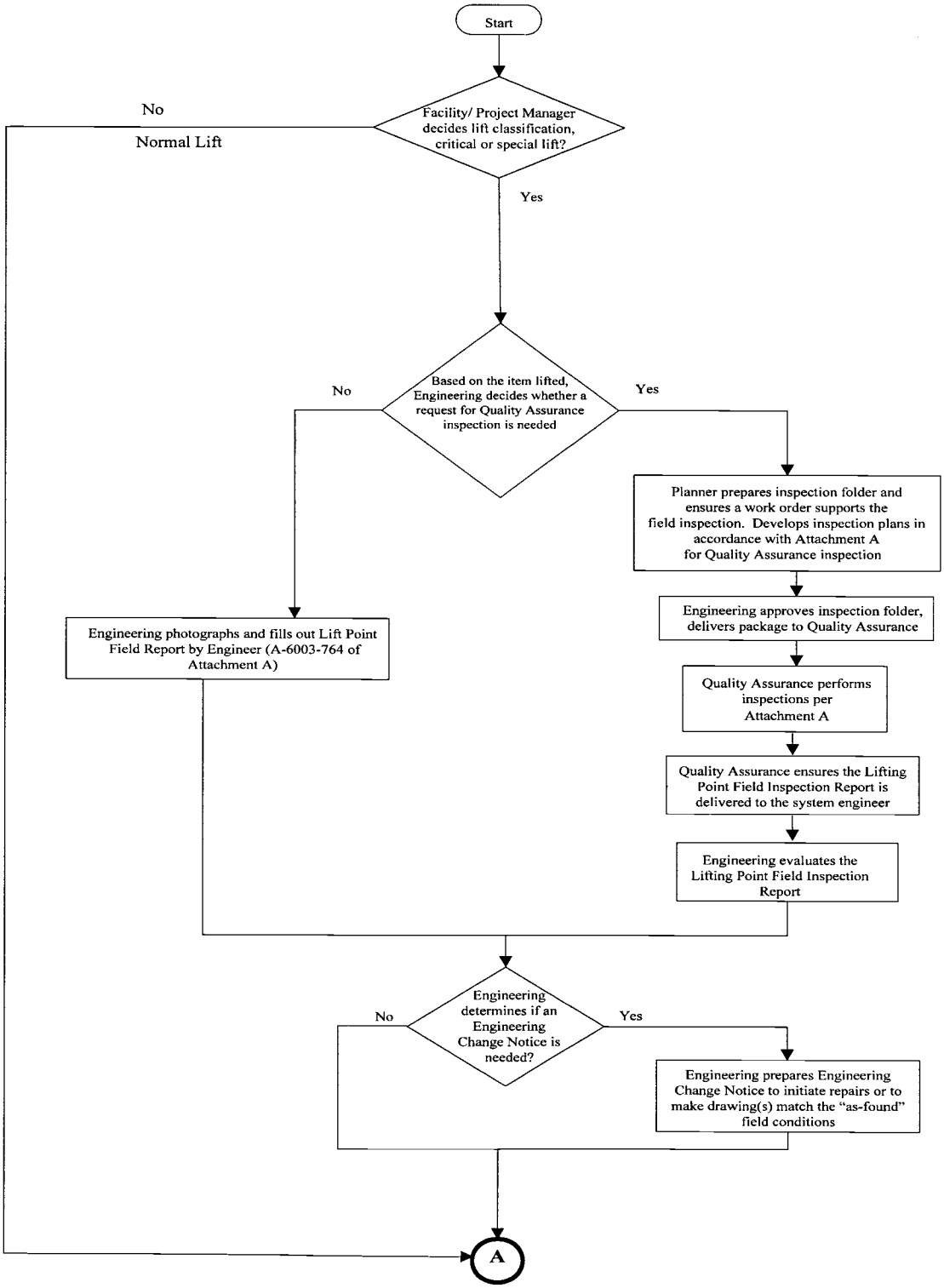

Figure 1. Verification of Lifting Point Structural Integrity Process. (cont.)

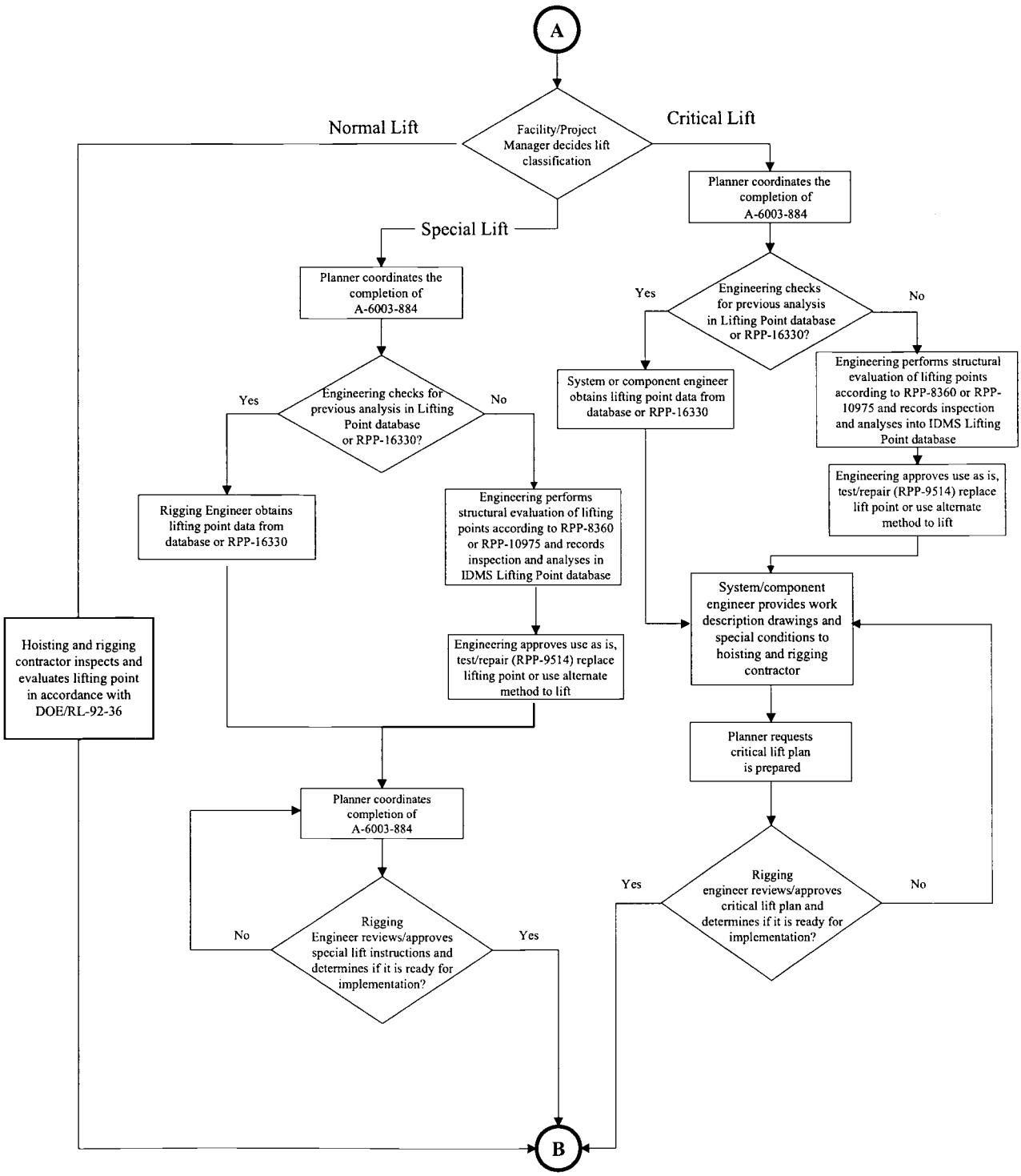

Figure 1. Verification of Lifting Point Structural Integrity Process. (cont.)

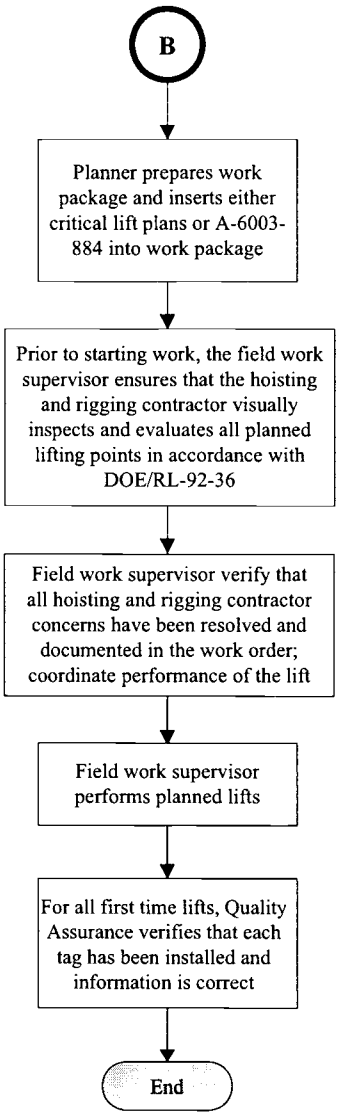

Figure 2. Inspection of Permanent Lifting Points Process.

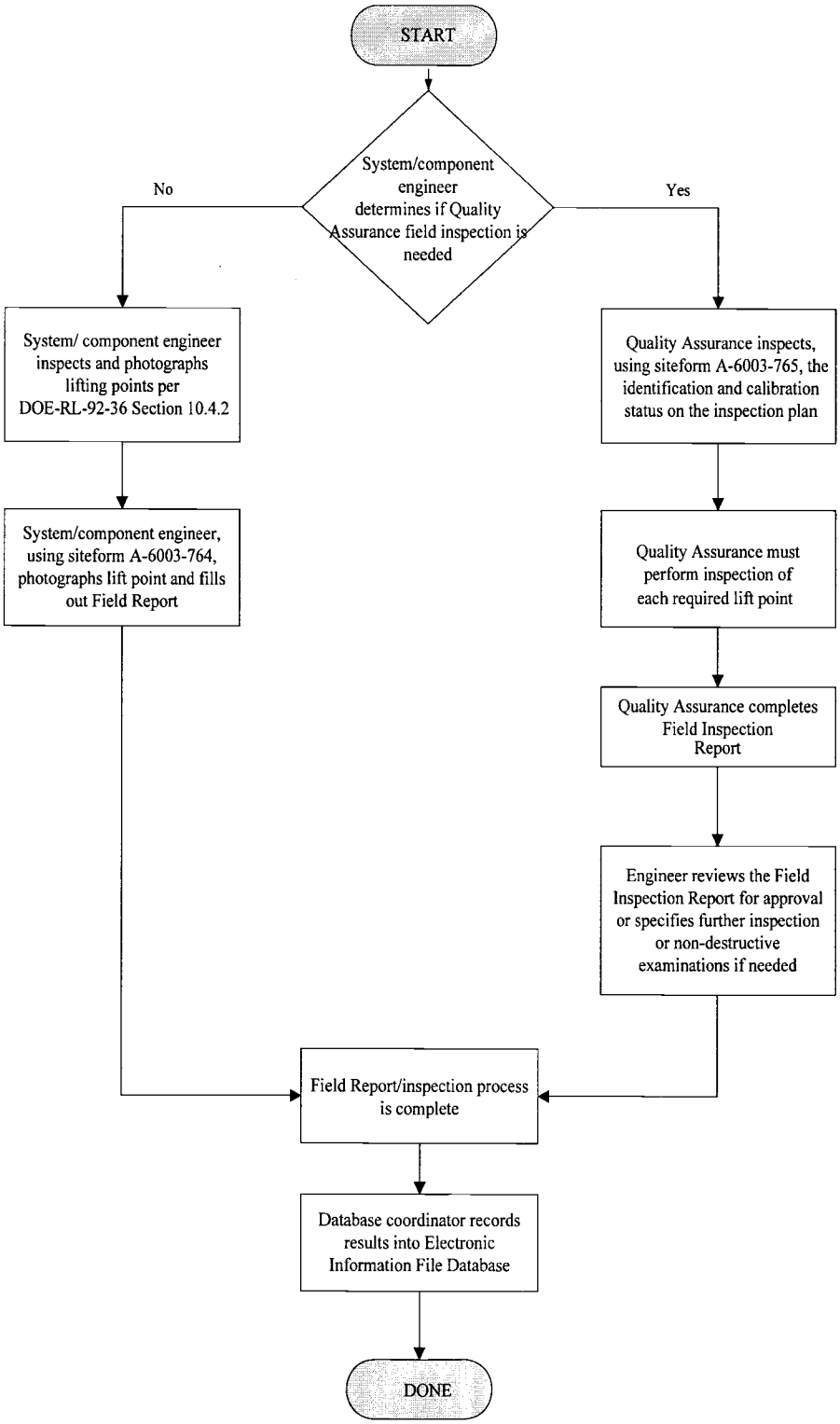

ELECTRICAL CONTRACTOR
AMERICAN ELECTRIC
RICHLAND, WASHINGTON

Pre-Job Briefing Date:1-05-09

Subject: Crane and Rigging Training AEI-22337-OC-08-011

Please have individuals sign and print their name below to verify that they have seen the above mentioned tailgate information.

Print Name	Signature	Position/Title
Lonnie Lohman	Lonnie Lohman	operator
Jeff Otterson	Jeff Otterson	operator

Jeff Badziong
Jeff Badziong, Field Work Supervisor

1/05/09
Date

AMERICAN ELECTRIC
ELECTRICAL CONTRACTOR
RICHLAND, WASHINGTON

Pre-Job Briefing Date:2-23-09

Subject: Crane and Rigging Training AEI-22337-OC-08-011

Please have individuals sign and print their name below to verify that they have seen the above mentioned tailgate information.

Print Name	Signature	Position/Title
BRIAN Lotze	B Lotze	OP

Jeff B. Badziong
Jeff Badziong, Field Work Supervisor

2/23/09
Date

ADMINISTRATIVE DOCUMENT CHANGE AUTHORIZATION

(See page 3 for form completion instructions)

1. Current Document Number/Revision	2. Document Title
TFC-OPS-OPER-C-14, REV D-1	EVENT INVESTIGATION PROCESS

3. Document Type: (●) Procedure ( ) Standard ( ) Guidance Doc. ( ) Mgmt. Directive ( ) Policy ( ) Plan ( ) Charter

4. Type of Change: ( ) New ( ) Major Revision (●) Minor Revision ( ) Administrative ( ) Periodic Review ( ) Cancellation

5. Initiated by	6. Phone	7. Mailstop	8. Date
S. F. Waters	373-3457	S5-70	03/10/09

9. Document Owner	10. Functional Area Manager
S. F. Waters	E. A. Tackett

11. Proposed Changes	12. Reason for Change
Strengthened fact-finding guidance to require solicitation of subject matter experts during the investigation (examples given). Removed all references to SAC meetings and procedure. Deleted Perform Program Evaluation section. Updated the Fact-Finding description found in Attachment A	Fact-Finding changes address E-Stars corrective action WRPS-PER-2008-0189.6. Removal of SAC references address cancellation of SAC meetings. Removal of Perform Program Evaluation section at direction of FAM.

IMPACTED PROCEDURES / DOCUMENTS

13. Document all impacted procedures/documents, procedure/document owners, whether ADCA needs to be completed

Procedure Number	Procedure Title	Document Owner	ADCA (Yes/No)
None			

TRAINING

14. Implementation Period: _____ Start Date _____ End Date ☒ Not applicable

15. Effective Date On Release

ADMINISTRATIVE DOCUMENT CHANGE AUTHORIZATION (continued)

1. Current Document Number/Revision	2. Document Title
TFC-OPS-OPER-C-14, REV D-1	EVENT INVESTIGATION PROCESS

16. Affected Groups/Organizations (Check all that apply)

	Affected	Training Required	Verification Required		Affected	Training Required	Verification Required
All Employees	☐	☐	☐	PAAA	☐	☐	☐
All Managers	☐	☐	☐	Procedures	☐	☐	☐
Assessments	☐	☐	☐	Procurement	☐	☐	☐
Communications	☐	☐	☐	Project Delivery	☐	☐	☐
Contracts	☐	☐	☐	Property	☐	☐	☐
Emergency Management	☐	☐	☐	Quality Assurance	☐	☐	☐
Engineering	☐	☐	☐	Radiological Control	☐	☐	☐
Environmental	☐	☐	☐	Safety & Health	☐	☐	☐
Finance	☐	☐	☐	Strategic Planning	☐	☐	☐
Human Resources	☐	☐	☐	Training	☐	☐	☐
Information Resource Management	☐	☐	☐	Waste Management	☐	☐	☐
ISMS	☐	☐	☐	Work Planning	☐	☐	☐
Legal	☐	☐	☐	222-S Laboratory	☐	☐	☐
Maintenance	☐	☐	☐	Not Applicable	☐		
Operations	☒	☐	☐				

17a. Indicate Method of Training:

- ☐ Required Reading with Verification
- ☐ Tailgate Meetings with Verification
- ☐ Staff Meetings with Verification
- ☐ Classroom Training with Verification
- ☐ Verbal Notification with Verification
- ☐ N/A

17b. Indicate Method of Informational Briefing:

- ☐ Face to Face Communication without Verification
- ☐ Verbal Notification without Verification
- ☐ Tailgate Meetings Without Verification
- ☒ Staff Meetings Without Verification
- ☐ Classroom Training without Verification
- ☐ N/A

18. Additional Training Requirements (Provide justification if training will not be conducted): ☐ N/A

None.

REVIEW

19. Designated Reviewing Organizations:

☐ Assessments	☐ Legal	☐ Radiological Control
☐ Communications	☐ Maintenance	☐ Safety and Health
☐ Contracts	☒ Operations	☐ Strategic Planning
☐ Emergency Management	☐ PAAA	☐ Training
☐ Engineering	☐ Procedures	☐ Waste Management
☐ Environmental	☐ Procurement	☐ Work Planning
☐ Finance	☐ Project Delivery	☐ 222-S Laboratory
☐ Human Resources	☐ Property	☐ Other _____
☐ Information Resource Management	☐ Quality Assurance	☐ Not Applicable
☐ ISMS		

ADMINISTRATIVE DOCUMENT CHANGE AUTHORIZATION (continued)

1. Current Document Number/Revision	2. Document Title
TFC-OPS-OPER-C-14, REV D-1	EVENT INVESTIGATION PROCESS

APPROVALS

20.

S/RID Representative (print and sign)/Date

21. USQ

- (●) USQ — USQ Evaluator (print and sign) & USQ Number/Date
- ( ) USQ-CAT-EX — USQ Evaluator or Individual Designated by NS&L (print and sign) & USQ Number/Date
- ( ) Out of Scope — Print Name and Sign/Date

22.

Document Owner (print and sign)/Date

Functional Area Manager (print and sign)/Date

Procedures (print and sign)/Date

FOR ADMINISTRATIVE CHANGES ONLY:

Procedures Manager (print and sign)/Date

ADMINISTRATIVE DOCUMENT CHANGE AUTHORIZATION INSTRUCTIONS

1) Current Document Number/Revision: The current document number and revision or the new document number and revision provided by the Procedures group.

2) Document Title: The title of the procedure being revised or the title of the new procedure. (Does the title convey the intent of the procedure, not to the owner, but to the user?)

3) Document Type: Indicate document type by marking the appropriate box. (See TFC-PLN-80 for definitions.)

4) Type of Change: New procedure, a major, minor or administrative change (see TFC-BSM-AD-C-01, 5.0 Definitions) to the existing procedure, periodic review, or cancellation?

5) Initiated by: Name of the person initiating the change.

6) Initiator's Phone Number: Enter either a cell phone number or office phone number where the initiator can be reached.

7) Mail Stop: The mail stop of the initiator.

8) Date: The date of submittal for the change. (This is not the implementation date or effective date of the change.)

9) Document Owner: The person assigned by the Functional Area Manager (TFC-BSM-AD-C-01, Section 3.2). See procedure ownership matrix on the procedures web page.

10) Functional Area Manager: The person responsible for implementation of the procedure (TFC-BSM-AD-C-01, Section 3.1.) See procedure ownership matrix on the procedures web page.

11) Proposed Changes: Clearly state changes to be made.

12) Reason for the Change: Explain why the change is necessary (e.g., the process has to be modified due to a new requirement, change in organizational responsibility, etc.

13) Impacted Procedures/Documents: Ask yourself: Does the new procedure or major or minor change affect any other organizations? Does it affect any other procedures (processes) or documents in other organizations? Call the POCs for the other organizations and have them help you make sure. (The POC list hotlink is available in TFC-BSM-AD-D-01.) Perform a search for all references to the procedure being changed and list those impacted by the change. This is the document owner's responsibility to identify other impacted procedures and to fill out the additional ADCAs!

14) Implementation Period: Not applicable for minor changes only. The implementation period is the time needed to complete the training on the changes and "VERIFICATION OF THE TRAINING COMPLETED" prior to the "Effective Date" of the procedure. If no implementation period is required, check "Not applicable."

15) Effective Date: The effective date of the procedure. Both the current procedure and the new procedure are shown on the intranet "Procedure page" until the effective date of the new procedure. The effective date of the procedure should not precede completion of the required training, orientation, briefing and/or socialization necessary to fully inform all affected organizations and personnel.

16) Affected Groups/Organization: Using the block 13 information, indicate the affected groups/organizations. The minimum choices should include the organization that owns the procedure, the organizations with responsibilities in the procedure and organizations/ groups/employees impacted by the change. If no one is affected, check "Not applicable."

17A, 17B) Method of Training/Briefing: Identify the method of training that will be given to affected groups/organizations/individuals. (Major revisions to a process should require (mandate) a more stringent training method that may include documented demonstration of proficiency and/or knowledge of both the process and the changes.) (See TFC-BSM-AD-C-01, Section 4.2, step 6 and Section 4.3, step 2, that discuss the document owner's responsibility to identify the training method and implementation.) Required reading is initiated by the document owner in accordance with TFC-OPS-OPER-C-33. If no training or informal briefing method is required, check "N/A."

18) Additional Training Requirements: Intended to be used to capture training that may be non-standard, unique, hands-on, etc. It is also for the document owner to provide the reason why training is not required in support of a change. (Even a minor change can set up a situation where personnel errors can occur.) If there are no additional training requirements, check "N/A."

19) Designated Reviewing Organizations: List organizations that should review the proposed change. See TFC-BSM-AD-C-01. Identify minimum reviewers. If no reviews are necessary, check "N/A."

20) S/RID Representative/Date: Signature by S/RID IA/SME indicates completion of review. If the S/RID signature is not required (not required for minor changes and guidance documents and typically not required for plans, policies, charters, and management directives), write N/A in the block.

21) USQ: USQ evaluator checks the "USQ" block and signs and dates and enters the USQ number when a USQ screening is performed. If the change is classified as "inconsequential" as defined by TFC-ENG-SB-C-03, the USQ evaluator or individual designated by NS&L checks the "USQ-CAT-EX" block, signs and dates, and enters the USQ number. If the document is listed in RPP-27195, no USQ is required; check the "Out of Scope" block and print, sign, and date.

22) Document Owner/Date: By signing, the document owner has reviewed and agrees with the ADCA and that the decisions/choices made address the change and the training necessary.

Functional Area Manager/Date: By signing this block, the Functional Area Manager is giving approval for the new or changed procedure. (See TFC-BSM-AD-C-01, Section 3.1, for responsibilities of the functional area manager.)

Procedures/Date: Final signature by Procedures prior to issuance of procedure.

Procedures Manager/Date: Final signature by Procedures Manager prior to issuance of procedure for administrative changes only.

Save

Problem Evaluation Request (PER)

WRPS-PER-2008-0167
In Process/Work

PER No	Date of Discovery	Time of Discovery (24:00)	Project
WRPS-PER-2008-0167	09/17/2008	16:00	Engineering

Location

All Tank Farms

How Was Problem Discovered

DOE

Description of Concern or Problem

A DNFSB letter regarding Hanford electrical systems was issued on September 17, 2008. The following issues regarding the tank farm electrical systems were addressed by the letter:

The main issue at the Tank Farms is the existence of several deficient design conditions affecting electrical systems. Examples of these design deficiencies include non-compliance with national codes, improper modifications and settings of circuit breakers, and improper fuses. Some of these deficiencies were identified by electrical calculations and studies conducted years ago, but the deficiencies remain uncorrected.

The electrical studies were performed in 2001, 2005 and 2007 and the deficiencies were identified in PERs that were generated during the release of each electrical study, however many of the deficiencies were not resolved. The deficient conditions are documented in RPP-RPT-38265, are reported in the System Health Report for the East Base Operations Electrical Distribution System, (RPP-RPT-25723).

The Board also noted that power to the safety-significant ventilation system for double-shell tanks in the Tank Farms is not classified as safety-significant. This situation is acceptable as long as the time to reach flammable conditions in the tank head space is on the order of a month or longer. However, waste retrieval and transfer operations can reduce this time. If the time to reach flammable conditions is significantly reduced by these operations, the DOE should reevaluate the functional classification of the electrical power supply and distribution systems.

Requirement Not Satisfied	Source Document Number
NFPA-70 National Electrical Code	
Equipment Identification Number	**System Identification**
NA	Electrical Distribution

Immediate actions Taken or Planned

The deficiencies were reviewed, and verified that conditions do not represent a imminent safety issue and energized electrical system devices and conductors are being used within approved conditions.

Recommended Corrective actions

Schedule and resolve each of the tank farm electrical design deficiencies, during the next scheduled tank farm outage.

Perform a formal apparent cause analysis to determine why the deficiencies were not corrected following release of the electrical load studies, determine the extent of this condition and identify necessary actions to prevent reoccurrence.

Suggest this PER be screened as a PER/RES to Mark Knight.

Originator Contact

No

Originators Name	Originators ID	Originators Phone	Date Initiated
Hamm, Earnest R	H0092509	(509) 372-0310	11/04/2008

SHIFT OPERATIONS REVIEW

Title

DNFSB letter regarding Hanford electrical systems

How Discovered	Agency
FACREP Surveillance	

Reportability	SSC Operability	Operability Review	Comp Measures Req

Non-Reportable	N/A	N/A	
Describe actions Taken or Recommended			
No additional BOSO actions required at this time.			
SO Reviewer Name	**SO Reviewer ID**	**SO Reviewer Phone**	**SO Review Date**
Johnson, Brian A	H0003531	(509) 373-2696	11/04/2008
SCREENING			
PER Significance Level			
PER with Resolution			
Independent Assessment Review	**Occurrence Report Number**	**Externally Identified**	
No		Yes	
Assigned Responsible Manager	**Facilities Rep / SSO**	**Safety Management Rep**	
Knight, Mark A			
Program		**Safety Management Program**	
• N/A		• Engineering Configuration Management	
PER Screening Comments			
PER w/ Res with formal Apparent Cause Analysis. (see attachments) (Nancy Brown 11/05/08) Perform a formal apparent cause analysis to determine why the deficiencies were not corrected following release of the electrical load studies, determine the extent of this condition and identify necessary actions to prevent reoccurrence. (Ernie Hamm, Engineering Discipline Lead, Electrical Engineering 11/5/08)			
Causal Code			
A4B1C03	Management Problem Management Methods LTA Management direction created insufficient awareness of impact of actions on safety/reliability		
A4B1C04	Management Problem Management Methods LTA Management follow-up or monitoring of activities did not identify problems		
A4B1C09	Management Problem Management Methods LTA Corrective action for previously identified problem or event was not adequate to prevent recurrence		
A4B2C05	Management Problem Resource Management LTA Needed resource changes not approved/funded		
A5B2C08	Communications LTA Written Communications Content LTA Incomplete/situation not covered		
A5B4C01	Communications LTA Verbal Communication LTA Communication between work groups		
MGT/Comm/Train	**Human Performance**	**GEMS**	**Equip/Eng/Other**
Failed Barrier	**ORPS Code**	**Functional Area**	**Work Process**
	Not Applicable	Engineering	• Configuration Control • Corrective Action Management • Electrical Safety • Flammable Gases • Safety Inspections

ISMS	Consequence Code		
Perform work within the controls	• Configuration Management - Documentation does not equal field condition • Engineering Requirement - Lack of/not adequately implemented or identified requirement • Flammable Gas - Contained or uncontained flammable gases at or exceeding safe conditions or explosive limits/static build-up/gas release event • Safety Concerns - Safety concerns, suggestions, and potential safety issues • Tank Ventilation - Ventilation system not available, not operable, not operated correctly, or otherwise LTA		
PER Screening Chair	**PER Screening Chair ID**	**PER Screening Chair Phone**	**PER Screening Date**
Brown, Nancy L	H0088797	(509) 373-0992	11/05/2008

PAAA REVIEW

PAAA Screening	PAAA Codes	Function Codes	
PAAA, Non-NTS Reportable	• 10 CFR 830.122 (c)(2) • 10 CFR 830.122 (f)(1) • 10 CFR 830.122 (f)(2)	• Configuration Management • Corrective Action Program • Inadequate Design or Design Verification	
NTS Report Number	**NTS Report Date**		
Repetitive / Recurrent	**Programmatic**	**Intentional Violation / Misrepresentation**	
No	No	No	
PAAA Screening Comments			
PAAA Reviewer Name	**PAAA Review Date**		
Anderson, Craig E	11/05/2008		
PAAA Approver Name	**PAAA Approve Date**		
Anderson, Craig E	11/06/2008		

SENIOR MANAGEMENT REVIEW/CONCURRENCE

TF Operations Morning Leadership Call

None. 11/6/08

Instructions for Responsible Manager

Review the PER Screening Tab and Senior Manager Review for requested data. Complete the task in E-STARS in accordance with TFC-ESHQ-Q_C-C-01, and TFC-ESHQ-Q_ADM-C-12 Apparent Cause Analysis & Corrective Action Planning.

Senior Management	Sr Mgmt ID	Sr Mgmt Phone	Sr Mgmt Review Date
Owen, Annette	H0054042	(509) 372-0533	11/06/2008

CAUSE ANALYSIS

Description of Occurrence

A DNFSB letter regarding Hanford electrical systems was issued on September 17, 2008. The following issues regarding the tank farm electrical systems were addressed by the letter:

The main issue at the Tank Farms is the existence of several deficient design conditions affecting electrical systems. Examples of these design deficiencies include non-compliance with national codes, improper modifications and settings of circuit breakers, and improper fuses. Some of these deficiencies were identified by electrical calculations and studies

conducted years ago, but the deficiencies remain uncorrected.

The electrical studies were performed in 2001, 2005 and 2007 and the deficiencies were identified in PERs that were generated during the release of each electrical study, however many of the deficiencies were not resolved. The deficient conditions are documented in RPP-RPT-38265, are reported in the System Health Report for the East Base Operations Electrical Distribution System, (RPP-RPT-25723).

The Board also noted that power to the safety-significant ventilation system for double-shell tanks in the Tank Farms is not classified as safety-significant. This situation is acceptable as long as the time to reach flammable conditions in the tank head space is on the order of a month or longer. However, waste retrieval and transfer operations can reduce this time. If the time to reach flammable conditions is significantly reduced by these operations, the DOE should reevaluate the functional classification of the electrical power supply and distribution systems.

Extent of Condition

RPP-RPT-38265, Rev 0, identifies multiple electrical deficiencies in AN Farm, AW Farm, AP Farm, AY Farm, and SY Farm. In addition, the documentation control system was searched to identify all issued electrical load calculations and studies. Nine more electrical loads studies were identified. Five of the studies contain no issues. Four of the studies contain legacy issues. A corrective action will be launched to review, evaluate, and document these discrepancies in a subsequent revision to RPP-RPT-38265 (Rev 1).

No bonding or grounding issues were identified in the review.

Safety Significance

Although the electrical distribution system at Tank Farms provides power to safety-significant systems (primary ventilation, leak dectection, service water pressure detection switch, etc.) it is classified as a general service system. There are no impacts to any equipment important to safety, or to personnel safety as a result of the issues identified by this PER. The operating load of energized electrical system devices and conductors are currently within their approved ratings.

Generic Implications

Remedial Corrective Action

Remedial corrective actions include the following:

- Wrote WRPS-PER-2008-0167 to document the problem.

- Completed extent of condition review for the issue identified by this PER.

- Performed walkdown on 12/04/08 of AY Farm wire sizing for acceptability per issue 8.1.1. Existing condition is satisfactory.

- Performed walkdown on 12/05/08 of AY Farm Panel DP-105 to verify loading per issue 8.6.2. Existing condition is satisfactory.

- Performed walkdown on 12/08/08 of SY Farm transformer EDS-XFMR-101 per issue 8.1.16. Determined that this issue is a duplicate to issue 8.6.2.3 and will be resolved via a corrective action associated with 8.6.2.3.

- Performed walkdown on 12/08/08 of SY Farm transformer per issue 8.6.2.4. Loading of the transformer has been determined and the existing condition is satisfactory.

Causal Analysis, Apparent Cause and/or Root Cause Analysis

Apparent Cause Analysis was completed via use of a Event and Causal Factor Chart.

Apparent Cause Analysis Summary:

The apparent causes of the issue identified in this PER are: A4B1C09 Management Problem, Management Methods LTA, Corrective action for previously identified problem or event was not adequate to prevent recurrence; A4B2C05 Management Problem, Resource Management LTA, Needed resource changes not approved/funded; and A5B2C08, Communications LTA, Written Communications Content LTA, Incomplete/situation not covered.

Contributing causes included A4B1C03 Management Problem, Management Methods LTA, Management direction created insufficient awareness of impact of actions on safety/reliability; A4B1C04 Management Problem, Management Methods LTA, Management follow-up or monitoring of activities did not identify problem; and A5B4C01 Communications LTA, Verbal Communication LTA, Communication between work groups LTA.

Problem Statement:

Several deficient design conditions affecting electrical systems exist within the Tank Farms. Examples of these design deficiencies include non-compliance with national codes, improper modifications and settings of circuit breakers, and

improper fuses. Some of these deficiencies were identified by electrical calculations and studies conducted years ago, but the deficiencies remain uncorrected.

Discussion:

Electrical equipment was designed, procured and installed in the Tank Farms from 1943 to present. However, design verification of electrical equipment was less than adequate for several installed equipment and systems. Electrical calculations and studies performed in 2001 identified several deficient design conditions affecting electrical systems. Work was initiated to resolve these deficient conditions. However, management tracking of and communication in the resolution of these discrepancies was inadequate. As a result, additional electrical calculations and studies performed in 2005 and 2007 again identified several deficient design conditions affecting electrical systems.

Approximately 50 PERs were written documenting deficient design conditions affecting electrical systems in the Tank Farms. A review of these PERs show that many did not have the block titled "Requirement not satisfied" completed. This made management tracking and follow-up of the discrepancies difficult. Further review also showed that many of the PERs were closed without taking action to resolve the problem by management direction due to a lack of funding.

CORRECTIVE ACTIONS

Actionee	Action Due Date	E-STARS Number
Nelson, Rick E	01/20/2009	WRPS-PER-2008-0167.1

Action

Ensure ECN-725722-R0 is released in support of WFO-WO-07-3103.

Reference: Issue 8.3.4 AN Farm

Deliverable: Electronic Copy of released ECN

Corrective Action Attachments

- DNFSB Electrical Letter Attachment.pdf
- DNFSB Electrical Letter.pdf
- Link to PER
- RE_ WRPS-PER-2008-0167 _RES_.msg
- WRPS-PER-2008-0167 EVENT & CAUSAL FACTORING CHART.pdf
- WRPS-PER-2008-0167.1 CLOSURE ECN-725722-R0.pdf

Actionee	Action Due Date	E-STARS Number
Brooks, Rocky L	07/08/2009	WRPS-PER-2008-0167.2

Action

Perform work package WFO-WO-07-3103.

Deliverable: Copy of work record.

Reference: Issue 8.3.4 AN Farm

Corrective Action Attachments

- DNFSB Electrical Letter Attachment.pdf
- DNFSB Electrical Letter.pdf
- Link to PER
- RE_ WRPS-PER-2008-0167 _RES_.msg
- Request to Extend WRPS-PER-2008-0167_2__4__7__22__31 _RES_.msg
- Request to Extend WRPS-PER-2009-0167_2__4__7.msg
- WRPS-PER-2008-0167 EVENT & CAUSAL FACTORING CHART.pdf
- WRPS-PER-2008-0167.2 Work Record for WFO-WO-07-3103.pdf

Actionee	Action Due Date	E-STARS Number
Nelson, Rick E	01/22/2009	WRPS-PER-2008-0167.3

Action

Ensure ECN in support of Work Package TFC-WO-08-0276 (to install fused disconnect) is released.

Deliverable: Electronic copy of released ECN.

Reference: Issue 8.4.4 AN Farm

Corrective Action Attachments

- DNFSB Electrical Letter Attachment.pdf
- DNFSB Electrical Letter.pdf
- Link to PER

- RE_ WRPS-PER-2008-0167 _RES_.msg
- WRPS-PER-2008-0167 EVENT & CAUSAL FACTORING CHART.pdf
- WRPS-PER-2008-0167.3 CLOSURE ECN-725990-R0.pdf

Actionee	Action Due Date	E-STARS Number
Brooks, Rocky L	07/08/2009	WRPS-PER-2008-0167.4

Action

Perform work package TFC-WO-08-0276.

Deliverable: Copy of work record.

Reference: Issue 8.4.4 AN Farm

Corrective Action Attachments

- DNFSB Electrical Letter Attachment.pdf
- DNFSB Electrical Letter.pdf
- Link to PER
- RE_ WRPS-PER-2008-0167 _RES_.msg
- Request to Extend WRPS-PER-2008-0167_2__4__7__22__31 _RES_.msg
- Request to Extend WRPS-PER-2009-0167_2__4__7.msg
- WRPS-PER-2008-0167 EVENT & CAUSAL FACTORING CHART.pdf
- WRPS-PER-2008-0167.4 Work Record for TFC-WO-08-0276.pdf

Actionee	Action Due Date	E-STARS Number
Nelson, Rick E	01/27/2009	WRPS-PER-2008-0167.5

Action

Ensure ECN in support of Work Package TFC-WO-08-0277 is released.

Deliverable: Electronic copy of released ECN.

Reference: Issue 8.4.5 AN Farm

Corrective Action Attachments

- DNFSB Electrical Letter Attachment.pdf
- DNFSB Electrical Letter.pdf
- Link to PER
- RE_ WRPS-PER-2008-0167 _RES_.msg
- WRPS-PER-2008-0167 EVENT & CAUSAL FACTORING CHART.pdf
- WRPS-PER-2008-0167.5 CLOSURE ECN-725995-R0.pdf

Actionee	Action Due Date	E-STARS Number
Brooks, Rocky L	03/11/2009	WRPS-PER-2008-0167.6

Action

Perform work package TFC-WO-08-0277.

Deliverable: Copy of work record.

Reference: Issue 8.4.5

Corrective Action Attachments

- DNFSB Electrical Letter Attachment.pdf
- DNFSB Electrical Letter.pdf
- Link to PER
- RE_ WRPS-PER-2008-0167 _RES_.msg
- WRPS-PER-2008-0167 EVENT & CAUSAL FACTORING CHART.pdf
- WRPS-PER-2008-0167.6 CLOSURE ECN-725995-R0.pdf
- WRPS-PER-2008-0167.6 Closure Information.doc.msg
- WRPS-PER-2008-0167.6 CLOSURE TFC-WO-08-0277.pdf

Actionee	Action Due Date	E-STARS Number
Brooks, Rocky L	07/08/2009	WRPS-PER-2008-0167.7

Action

Perform work package WDL-110523.

Deliverable: Copy of work record.

Reference: Issue 8.5.3.2 AN Farm

Corrective Action Attachments

- DNFSB Electrical Letter Attachment.pdf
- DNFSB Electrical Letter.pdf
- Link to PER
- RE_ WRPS-PER-2008-0167 _RES_.msg
- Request to Extend WRPS-PER-2008-0167_2__4__7__22__31 _RES_.msg
- Request to Extend WRPS-PER-2009-0167_2__4__7.msg
- WRPS-PER-2008-0167 EVENT & CAUSAL FACTORING CHART.pdf
- WRPS-PER-2008-0167.7 Work Record for WDL110523.pdf

Actionee	Action Due Date	E-STARS Number
Nelson, Rick E	02/18/2009	WRPS-PER-2008-0167.8

Action

Prepare engineering technical evaluation for cable runs identified in Issue 8.5.3.6 (AN Farm).

Deliverable: Electronic copy of technical evaluation.

Reference: Issue 8.5.3.6 AN Farm

Corrective Action Attachments

- CH2M-PER-2008-0167.8 CLOSURE RPP-RPT-38265-R1.pdf
- DNFSB Electrical Letter Attachment.pdf
- DNFSB Electrical Letter.pdf
- Link to PER
- RE_ WRPS-PER-2008-0167 _RES_.msg
- WRPS-PER-2008-0167 EVENT & CAUSAL FACTORING CHART.pdf

Actionee	Action Due Date	E-STARS Number
Ewer, Kenneth L	02/17/2009	WRPS-PER-2008-0167.9

Action

Ensure ECN-726001-R0 in support of Work Package TFC-WO-08-2307 is released.

Deliverable: Electronic copy of released ECN.

Reference: Issue 8.1.2 AP Farm

Corrective Action Attachments

- DNFSB Electrical Letter Attachment.pdf
- DNFSB Electrical Letter.pdf
- Link to PER
- RE_ WRPS-PER-2008-0167 _RES_.msg
- WRPS-PER-2008-0167 EVENT & CAUSAL FACTORING CHART.pdf
- WRPS-PER-2008-0167.9 CLOSURE ECN-726001-R0.pdf

Actionee	Action Due Date	E-STARS Number
Brooks, Rocky L	09/15/2009	WRPS-PER-2008-0167.10

Action

Perform work package TFC-WO-08-2307.

Deliverable: Copy of work record.

Reference: Issue 8.1.2 AP Farm

Corrective Action Attachments

- DNFSB Electrical Letter Attachment.pdf
- DNFSB Electrical Letter.pdf
- Link to PER
- RE_ WRPS-PER-2008-0167 _RES_.msg
- WRPS-PER-2008-0167 EVENT & CAUSAL FACTORING CHART.pdf

Actionee	Action Due Date	E-STARS Number
Nelson, Rick E	05/21/2009	WRPS-PER-2008-0167.11

Action

Ensure ECN-725942-R0 in support of Work Package TFC-WO-08-2309 is released.

Deliverable: Electronic copy of released ECN.

Reference: Issue 8.1.4 AP Farm

Corrective Action Attachments

- DNFSB Electrical Letter Attachment.pdf
- DNFSB Electrical Letter.pdf
- Link to PER
- RE_ WRPS-PER-2008-0167 _RES_.msg
- WRPS-PER-2008-0167 EVENT & CAUSAL FACTORING CHART.pdf
- WRPS-PER-2008-0167.11 CLOSURE ECN-726275-R0.pdf

Actionee	Action Due Date	E-STARS Number
Brooks, Rocky L	09/07/2009	WRPS-PER-2008-0167.12

Action

Perform work package TFC-WO-08-2309.

Deliverable: Copy of work record.

Reference: Issue 8.1.4 AP Farm

Corrective Action Attachments

- DNFSB Electrical Letter Attachment.pdf
- DNFSB Electrical Letter.pdf
- Link to PER
- RE_ WRPS-PER-2008-0167 _RES_.msg
- WRPS-PER-2008-0167 EVENT & CAUSAL FACTORING CHART.pdf

Actionee	Action Due Date	E-STARS Number
Nelson, Rick E	01/21/2009	WRPS-PER-2008-0167.13

Action

Ensure ECN-726031-R0 in support of Work Package TFC-WO-08-2656 is released.

Deliverable: Electronic copy of released ECN.

Reference: Issue 8.1.5 AP Farm

Corrective Action Attachments

- DNFSB Electrical Letter Attachment.pdf
- DNFSB Electrical Letter.pdf
- Link to PER
- RE_ WRPS-PER-2008-0167 _RES_.msg
- WRPS-PER-2008-0167 EVENT & CAUSAL FACTORING CHART.pdf
- WRPS-PER-2008-0167.13 CLOSURE ECN-726031-R0.pdf

Actionee	Action Due Date	E-STARS Number
Brooks, Rocky L	09/30/2009	WRPS-PER-2008-0167.14

Action

Perform work package Work Package TFC-WO-08-2656

Deliverable: Copy of work record.

Reference: Issue 8.1.5 AP Farm

Corrective Action Attachments

- DNFSB Electrical Letter Attachment.pdf
- DNFSB Electrical Letter.pdf
- Link to PER
- RE_ WRPS-PER-2008-0167 _RES_.msg
- WRPS-PER-2008-0167 EVENT & CAUSAL FACTORING CHART.pdf

Actionee	Action Due Date	E-STARS Number
Brooks, Rocky L	08/11/2009	WRPS-PER-2008-0167.15

Action

Perform work package Work Package WDL-111851

Deliverable: Copy of work record.

Reference: Issue 8.5.4 AP Farm

Corrective Action Attachments

- DNFSB Electrical Letter Attachment.pdf
- DNFSB Electrical Letter.pdf

- Link to PER
- RE_ WRPS-PER-2008-0167 _RES_.msg
- WRPS-PER-2008-0167 EVENT & CAUSAL FACTORING CHART.pdf

Actionee	Action Due Date	E-STARS Number
Brooks, Rocky L	07/22/2009	WRPS-PER-2008-0167.16

Action

Perform work package Work Package WDL-110917

Deliverable: Copy of work record.

Reference: Issue 8.5.4 & 8.5.5.2 AW Farm

Corrective Action Attachments

- DNFSB Electrical Letter Attachment.pdf
- DNFSB Electrical Letter.pdf
- Link to PER
- RE_ WRPS-PER-2008-0167 _RES_.msg
- WRPS-PER-2008-0167 EVENT & CAUSAL FACTORING CHART.pdf

Actionee	Action Due Date	E-STARS Number
Brooks, Rocky L	09/30/2009	WRPS-PER-2008-0167.17

Action

Action: Perform work package to replace breaker 101 in AP Farm (reference new work request TFC-WR-08-2310).

Deliverable: Copy of work record.

Reference: Issue 8.7.7 AW Farm

Corrective Action Attachments

- DNFSB Electrical Letter Attachment.pdf
- DNFSB Electrical Letter.pdf
- Link to PER
- RE_ WRPS-PER-2008-0167 _RES_.msg
- WRPS-PER-2008-0167 EVENT & CAUSAL FACTORING CHART.pdf

Actionee	Action Due Date	E-STARS Number
Nelson, Rick E	04/23/2009	WRPS-PER-2008-0167.18

Action

Ensure ECN in support of Work Package associated with new work request TFC-WR-08-2310 is released.

Deliverable: Electronic copy of released ECN.

Reference: Issue 8.7.7 AW Farm

Corrective Action Attachments

- DNFSB Electrical Letter Attachment.pdf
- DNFSB Electrical Letter.pdf
- Link to PER
- RE_ WRPS-PER-2008-0167 _RES_.msg
- WRPS-PER-2008-0167 EVENT & CAUSAL FACTORING CHART.pdf
- WRPS-PER-2008-0167.18 CLOSURE ECN-726325-R0.pdf

Actionee	Action Due Date	E-STARS Number
Nelson, Rick E	03/18/2009	WRPS-PER-2008-0167.19

Action

Ensure ECN in support of Work Package TFC-WO-08-2312 is released.

Deliverable: Electronic copy of released ECN.

Reference: Issue 8.1.2 AY Farm

Corrective Action Attachments

- DNFSB Electrical Letter Attachment.pdf
- DNFSB Electrical Letter.pdf
- Link to PER
- RE_ WRPS-PER-2008-0167 _RES_.msg
- WRPS-PER-2008-0167 EVENT & CAUSAL FACTORING CHART.pdf

- WRPS-PER-2008-0167.19 CLOSURE E-MAIL DISPOSITION.msg

Actionee	Action Due Date	E-STARS Number
Brooks, Rocky L	06/10/2009	WRPS-PER-2008-0167.20

Action

Perform work package TFC-WO-08-2312

Deliverable: Copy of work record.

Reference: Issue 8.1.2 AY Farm

Corrective Action Attachments

- DNFSB Electrical Letter Attachment.pdf
- DNFSB Electrical Letter.pdf
- Link to PER
- RE_ WRPS-PER-2008-0167 _RES_.msg
- WRPS-PER-2008-0167 EVENT & CAUSAL FACTORING CHART.pdf

Actionee	Action Due Date	E-STARS Number
Nelson, Rick E	01/30/2009	WRPS-PER-2008-0167.21

Action

Ensure ECN-726043-R0 in support of work package TFC-WO-08-2313 is released.

Deliverable: Copy of work record.

Reference: Issue 8.1.4 AY Farm

Corrective Action Attachments

- DNFSB Electrical Letter Attachment.pdf
- DNFSB Electrical Letter.pdf
- Link to PER
- RE_ WRPS-PER-2008-0167 _RES_.msg
- WRPS-PER-2008-0167 EVENT & CAUSAL FACTORING CHART.pdf
- WRPS-PER-2008-0167.21 CLOSURE ECN-726043-R0.pdf

Actionee	Action Due Date	E-STARS Number
Brooks, Rocky L	08/18/2009	WRPS-PER-2008-0167.22

Action

Perform work package TFC-WO-08-2313

Deliverable: Copy of work record.

Reference: Issue 8.1.4 AY Farm

Corrective Action Attachments

- DNFSB Electrical Letter Attachment.pdf
- DNFSB Electrical Letter.pdf
- Link to PER
- RE_ WRPS-PER-2008-0167 _RES_.msg
- Request to Extend WRPS-PER-2008-0167_2__4__7__22__31 _RES_.msg
- WRPS-PER-2008-0167 EVENT & CAUSAL FACTORING CHART.pdf

Actionee	Action Due Date	E-STARS Number
Nelson, Rick E	02/11/2009	WRPS-PER-2008-0167.23

Action

Evaluate adequacy of insulation associated with Issue 8.5.4.4 for AY Farm wiring, and provide results to the Electrical Discipline Lead for incorporation into RPP-RPT-38265, Rev 1.

Deliverable: Electronic copy of evaluation or documentation sent to Electrical Discipline Lead.

Corrective Action Attachments

- DNFSB Electrical Letter Attachment.pdf
- DNFSB Electrical Letter.pdf
- Link to PER
- RE_ WRPS-PER-2008-0167 _RES_.msg
- WRPS-PER-2008-0167 EVENT & CAUSAL FACTORING CHART.pdf
- WRPS-PER-2008-0167.23 CLOSURE RPP-RPT-38265-R1.pdf

Actionee	Action Due Date	E-STARS Number
Brooks, Rocky L	08/15/2009	WRPS-PER-2008-0167.24

Action

Perform work package TFC-WO-08-2315

Deliverable: Copy of work record.

Reference: Issue 8.1.2 SY Farm

Corrective Action Attachments

- DNFSB Electrical Letter Attachment.pdf
- DNFSB Electrical Letter.pdf
- Link to PER
- RE_ WRPS-PER-2008-0167 _RES_.msg
- Request to Extend WRPS-PER-2008-0167_24 _RES_ _ CH2M-PER-2008-1300 _TUF_.msg
- WRPS-PER-2008-0167 EVENT & CAUSAL FACTORING CHART.pdf

Actionee	Action Due Date	E-STARS Number
Nguyen, Toan H	05/21/2009	WRPS-PER-2008-0167.25

Action

Prepare ECN to install the correct size fuses at the EC-1-1 Fan Motor.

Deliverable: Electronic copy of released ECN.

Reference: Issue 8.1.3 SY Farm

Corrective Action Attachments

- DNFSB Electrical Letter Attachment.pdf
- DNFSB Electrical Letter.pdf
- Link to PER
- RE_ WRPS-PER-2008-0167 _RES_.msg
- WRPS-PER-2008-0167 EVENT & CAUSAL FACTORING CHART.pdf
- WRPS-PER-2008-0167.25 CLOSURE ECN-726283-R1.pdf
- WRPS-PER-2008-0167.25 Released ECN-726283.pdf

Actionee	Action Due Date	E-STARS Number
Ficklin, Jim	07/25/2009	WRPS-PER-2008-0167.26

Action

Prepare/perform work package to replace fuse in EX-C-1 (EC-1-1 fan motor)

Deliverable: Copy of work record.

Reference: Issue 8.1.3 SY Farm

Corrective Action Attachments

- DNFSB Electrical Letter Attachment.pdf
- DNFSB Electrical Letter.pdf
- Link to PER
- RE_ WRPS-PER-2008-0167 _RES_.msg
- Request to Extend WRPS-PER-2008-0167 Corrective Actions.msg
- WRPS-PER-2008-0167 EVENT & CAUSAL FACTORING CHART.pdf

Actionee	Action Due Date	E-STARS Number
Brooks, Rocky L	07/25/2009	WRPS-PER-2008-0167.27

Action

Perform work package TFC-WO-08-2316

Deliverable: Copy of work record.

Reference: Issue 8.1.4

Corrective Action Attachments

- DNFSB Electrical Letter Attachment.pdf
- DNFSB Electrical Letter.pdf
- Link to PER
- RE_ WRPS-PER-2008-0167 _RES_.msg
- Request to Extend WRPS-PER-2008-0167 Corrective Actions.msg
- WRPS-PER-2008-0167 EVENT & CAUSAL FACTORING CHART.pdf

Actionee	Action Due Date	E-STARS Number
Brooks, Rocky L	07/25/2009	WRPS-PER-2008-0167.28

Action

Perform work package TFC-WO-08-2317.

Deliverable: Copy of work record.

Reference: Issue 8.1.6

Corrective Action Attachments

- DNFSB Electrical Letter Attachment.pdf
- DNFSB Electrical Letter.pdf
- Link to PER
- RE_ WRPS-PER-2008-0167 _RES_.msg
- Request to Extend WRPS-PER-2008-0167 Corrective Actions.msg
- WRPS-PER-2008-0167 EVENT & CAUSAL FACTORING CHART.pdf

Actionee	Action Due Date	E-STARS Number
Brooks, Rocky L	07/25/2009	WRPS-PER-2008-0167.29

Action

Perform work package TFC-WO-08-2318

Deliverable: Copy of work record.

Reference: Issue 8.1.10

Corrective Action Attachments

- DNFSB Electrical Letter Attachment.pdf
- DNFSB Electrical Letter.pdf
- FW_ Request to Extend WRPS-PER-2008-0167 Corrective Actions.msg
- Link to PER
- RE_ WRPS-PER-2008-0167 _RES_.msg
- WRPS-PER-2008-0167 EVENT & CAUSAL FACTORING CHART.pdf

Actionee	Action Due Date	E-STARS Number
Brooks, Rocky L	07/25/2009	WRPS-PER-2008-0167.30

Action

Perform work package WFO-WO-08-0002 to verify lugs on the T-1 transformer are rated for 75C. Document acceptability of breaker in MCC-E-001 or prepare work package to replace it.

Deliverable: Copy of work record documenting verification of lugs and disposition on MCC-E-001.

Reference: Issue 8.1.14

Corrective Action Attachments

- DNFSB Electrical Letter Attachment.pdf
- DNFSB Electrical Letter.pdf
- Link to PER
- RE_ WRPS-PER-2008-0167 _RES_.msg
- Request to Extend WRPS-PER-2008-0167 Corrective Actions.msg
- WRPS-PER-2008-0167 EVENT & CAUSAL FACTORING CHART.pdf

Actionee	Action Due Date	E-STARS Number
Brooks, Rocky L	08/05/2009	WRPS-PER-2008-0167.31

Action

Perform work package TFC-WO-08-2319

Deliverable: Copy of work record.

Reference: Issue 8.1.15 SY Farm

Corrective Action Attachments

- DNFSB Electrical Letter Attachment.pdf
- DNFSB Electrical Letter.pdf
- Link to PER
- RE_ WRPS-PER-2008-0167 _RES_.msg
- Request to Extend WRPS-PER-2008-0167_2__4__7__22__31 _RES_.msg
- WRPS-PER-2008-0167 EVENT & CAUSAL FACTORING CHART.pdf

Actionee	Action Due Date	E-STARS Number
Ficklin, Jim	05/26/2009	WRPS-PER-2008-0167.32

Action

Perform work package (reference new work request TFC-WO-08-0456) to determine the 242-S K-1 fan motor wire size and type.

Deliverable: Copy of work record documenting the 242-S K-1 fan motor wire size and type.

Reference: Issue 8.1.17 SY Farm

Corrective Action Attachments

- DNFSB Electrical Letter Attachment.pdf
- DNFSB Electrical Letter.pdf
- Link to PER
- RE_ WRPS-PER-2008-0167 _RES_.msg
- WRPS-PER-2008-0167 EVENT & CAUSAL FACTORING CHART.pdf
- WRPS-PER-2008-0167.32 DNFSB Item 8.1.17.msg

Actionee	Action Due Date	E-STARS Number
Nguyen, Toan H	07/13/2009	WRPS-PER-2008-0167.33

Action

Prepare ECN to document the 242-S K-1 fan motor wire size and type.

Deliverable: Electronic copy of released ECN.

Reference: Issue 8.1.17 SY Farm

Corrective Action Attachments

- DNFSB Electrical Letter Attachment.pdf
- DNFSB Electrical Letter.pdf
- Link to PER
- RE_ Extension Request for WRPS-PER-2009-0167_33.msg
- RE_ WRPS-PER-2008-0167 _RES_.msg
- WRPS-PER-2008-0167 EVENT & CAUSAL FACTORING CHART.pdf

Actionee	Action Due Date	E-STARS Number
Brooks, Rocky L	07/25/2009	WRPS-PER-2008-0167.34

Action

Perform work package CLO-WO-08-2367

Deliverable: Copy of work record.

Reference: Issue 8.5.5.6 SY Farm

Corrective Action Attachments

- DNFSB Electrical Letter Attachment.pdf
- DNFSB Electrical Letter.pdf
- Link to PER
- RE_ WRPS-PER-2008-0167 _RES_.msg
- Request to Extend WRPS-PER-2008-0167 Corrective Actions.msg
- WRPS-PER-2008-0167 EVENT & CAUSAL FACTORING CHART.pdf

Actionee	Action Due Date	E-STARS Number
Nelson, Rick E	02/18/2009	WRPS-PER-2008-0167.35

Action

Ensure ECN-726036-R0 to document SY Farm transformer loads and nameplate data is released.

Deliverable: Electronic copy of released ECN.

Reference: Issue 8.6.2.3 SY Farm

Corrective Action Attachments

- CH2M-PER-2008-0167.35 CLOSURE ECN-726036-R0.pdf
- DNFSB Electrical Letter Attachment.pdf
- DNFSB Electrical Letter.pdf
- Link to PER
- RE_ WRPS-PER-2008-0167 _RES_.msg

- WRPS-PER-2008-0167 EVENT & CAUSAL FACTORING CHART.pdf

Actionee	Action Due Date	E-STARS Number
Hamm, Earnest R	02/26/2009	WRPS-PER-2008-0167.36

Action

Revise RPP-RPT-38265 Rev 0 to include an evaluation of all 78 identified electrical discrepancies and to document which of these issues require fieldwork to resolve.

Deliverable: Electronic copy of RPP-RPT-38265 Rev 1.

Corrective Action Attachments

- DNFSB Electrical Letter Attachment.pdf
- DNFSB Electrical Letter.pdf
- Link to PER
- RE_ WRPS-PER-2008-0167 _RES_.msg
- WRPS-PER-2008-0167 EVENT & CAUSAL FACTORING CHART.pdf
- WRPS-PER-2008-0167.36 CLOSURE RPP-RPT-38265-R1.pdf

Actionee	Action Due Date	E-STARS Number
Hamm, Earnest R	07/16/2009	WRPS-PER-2008-0167.37

Action

Revise RPP-RPT-38265 Rev 1 to include an evaluation of electrical discrepancies for the four additional electrical load calculations found during the extent of condition review.

Deliverable: Electronic copy of RPP-RPT-38265 Rev 2.

Corrective Action Attachments

- DNFSB Electrical Letter Attachment.pdf
- DNFSB Electrical Letter.pdf
- Link to PER
- RE_ WRPS-PER-2008-0167 _RES_.msg
- WRPS-PER-2008-0167 EVENT & CAUSAL FACTORING CHART.pdf

Actionee	Action Due Date	E-STARS Number
Hamm, Earnest R	09/23/2009	WRPS-PER-2008-0167.38

Action

Revise RPP-RPT-38265 Rev 2 to include an evaluation of all identified electrical discrepancies, to document which of these issues required fieldwork to resolve, and their final disposition.

Deliverable: Electronic copy of RPP-RPT-38265 Rev 3.

Corrective Action Attachments

- DNFSB Electrical Letter Attachment.pdf
- DNFSB Electrical Letter.pdf
- Link to PER
- RE_ WRPS-PER-2008-0167 _RES_.msg
- WRPS-PER-2008-0167 EVENT & CAUSAL FACTORING CHART.pdf

Actionee	Action Due Date	E-STARS Number
Nelson, Rick E	02/12/2009	WRPS-PER-2008-0167.39

Action

Evaluate adequacy of insulation associated with Issue 8.6.2.1 for SY Farm wiring, and provide results to the Electrical Discipline Lead for incorporation into RPP-RPT-38265, Rev 1.

Deliverable: Electronic copy of evaluation or documentation sent to Electrical Discipline Lead.

Corrective Action Attachments

- DNFSB Electrical Letter Attachment.pdf
- DNFSB Electrical Letter.pdf
- Link to PER
- RE_ WRPS-PER-2008-0167 _RES_.msg
- WRPS-PER-2008-0167 EVENT & CAUSAL FACTORING CHART.pdf
- WRPS-PER-2008-0167.39 CLOSURE RPP-RPT-38265.pdf

Actionee	Action Due Date	E-STARS Number
Nelson, Rick E	05/07/2009	WRPS-PER-2008-0167.40

Action

Ensure ECN in support of Work Package TFC-WO-08-2316 (to remove power from DACS Trailer) is released.

Deliverable: Electronic copy of released ECN.
Reference: Issue 8.1.4 SY Farm

Corrective Action Attachments

- DNFSB Electrical Letter Attachment.pdf
- DNFSB Electrical Letter.pdf
- Link to PER
- RE_ WRPS-PER-2008-0167 _RES_.msg
- WRPS-PER-2008-0167 EVENT & CAUSAL FACTORING CHART.pdf
- WRPS-PER-2008-0167.40 CLOSURE ECN-726166-R0.pdf

Actionee	Action Due Date	E-STARS Number
Nelson, Rick E	04/23/2009	WRPS-PER-2008-0167.41

Action

Ensure ECN in support of Work Package TFC-WO-08-2317 (to replace 200A breaker with 150 A breaker) is released.

Deliverable: Electronic copy of released ECN.
Reference: Issue 8.1.6 SY Farm

Corrective Action Attachments

- DNFSB Electrical Letter Attachment.pdf
- DNFSB Electrical Letter.pdf
- Link to PER
- RE_ WRPS-PER-2008-0167 _RES_.msg
- WRPS-PER-2008-0167 EVENT & CAUSAL FACTORING CHART.pdf
- WRPS-PER-2008-0167.41 CLOSURE ECN-726132-R0.pdf

Actionee	Action Due Date	E-STARS Number
Nelson, Rick E	05/07/2009	WRPS-PER-2008-0167.42

Action

Ensure ECN in support of Work Package TFC-WO-08-2318 (to replace 80A breaker EDS-DP-118 with a 40A breaker) is released.

Deliverable: Electronic copy of released ECN.
Reference: Issue 8.1.10 SY Farm

Corrective Action Attachments

- DNFSB Electrical Letter Attachment.pdf
- DNFSB Electrical Letter.pdf
- Link to PER
- RE_ WRPS-PER-2008-0167 _RES_.msg
- WRPS-PER-2008-0167 EVENT & CAUSAL FACTORING CHART.pdf
- WRPS-PER-2008-0167.42 CLOSURE ECN 726117.pdf

Actionee	Action Due Date	E-STARS Number
Nelson, Rick E	04/07/2009	WRPS-PER-2008-0167.43

Action

Ensure ECN in support of MCC-E-001 breaker replacement is released OR provide justification of breaker acceptability.

Deliverable: Electronic copy of released ECN or written justification in comments section of corrective action to document breaker acceptability.
Reference: Issue 8.1.14 SY Farm

Corrective Action Attachments

- DNFSB Electrical Letter Attachment.pdf
- DNFSB Electrical Letter.pdf
- Link to PER
- RE_ WRPS-PER-2008-0167 _RES_.msg
- WRPS-PER-2008-0167 EVENT & CAUSAL FACTORING CHART.pdf
- WRPS-PER-2008-0167.43 CLOSURE E-MAIL DISPOSITION.msg

Actionee	Action Due Date	E-STARS Number
Nelson, Rick E	05/13/2009	WRPS-PER-2008-0167.44

Action

Ensure ECN in support of Work Package TFC-WO-08-2319 (to replace 125A BKR-104 with a 100A breaker) is released.

Deliverable: Electronic copy of released ECN.
Reference: Issue 8.1.15 SY Farm

Corrective Action Attachments

- DNFSB Electrical Letter Attachment.pdf
- DNFSB Electrical Letter.pdf
- Link to PER
- RE_ WRPS-PER-2008-0167 _RES_.msg
- WRPS-PER-2008-0167 EVENT & CAUSAL FACTORING CHART.pdf
- WRPS-PER-2008-0167.44 CLOSURE ECN-726128-R0.pdf

ATTACHMENTS

DNFSB Electrical Letter Attachment.pdf

DNFSB Electrical Letter.pdf

Link to PER

RE_ WRPS-PER-2008-0167 _RES_.msg

WRPS-PER-2008-0167 EVENT & CAUSAL FACTORING CHART.pdf

AUDIT HISTORY

Change Date	Auditor	Comments
11/06/2008 09:14	Owen, Annette	Responsible Manager Task Launched by Owen, Annette
12/30/2008 09:21	Glaman, Linda R	'Screening Program' was changed. 'Screening Safety Managemnt Program' was changed.
12/30/2008 09:29	Glaman, Linda R	Corrective actions Launched by Glaman, Linda R
12/31/2008 11:42	Owen, Annette	Change to Cause Analysis screen/Corrective Action plan.
12/31/2008 11:46	Owen, Annette	Corrective actions Launched by Owen, Annette
01/19/2009 15:51	Owen, Annette	Change to Cause Analysis screen/Corrective Action plan.
01/19/2009 15:51	Owen, Annette	Corrective Action item - modification to synchronize with E-STARS. 'Actionee' was changed.
01/21/2009 08:34	Owen, Annette	Change to Cause Analysis screen/Corrective Action plan.
01/21/2009 08:34	Owen, Annette	Corrective Action item - modification to synchronize with E-STARS.'Action Due Date' was changed.
02/13/2009 15:17	Owen, Annette	Change to Cause Analysis screen/Corrective Action plan.
02/13/2009 15:19	Owen, Annette	1st extension to 5/29/09 per form A-6003-227. An extension is requested due to the schedule changes associate with the annual maintenance outage at AP Farm, which has been moved to May. David Bragg for M Hardy (acting for M Knight) per telecon
04/24/2009 07:05	Owen, Annette	Change to Cause Analysis screen/Corrective Action plan.
04/24/2009 07:06	Owen, Annette	Extend CA 2 to 5/25/09 per e-mail request. Work has begun in AN Farm but has been delayed in part due to issues with the electrical outage and farm ventilation system, and the need to support waste retrieval (C-104 to AN-101). Additional time is therefore required to complete these tasks. David Bragg
04/24/2009 07:07	Owen, Annette	Extend CA 4 to 5/25/09 per e-mail request. Work has begun in AN Farm but has been delayed in part due to issues with the electrical outage and farm ventilation system, and the need to support waste retrieval (C-104 to AN-101). Additional time is therefore required to complete these tasks. David Bragg
04/24/2009 07:08	Owen, Annette	Extend CA 7 to 5/25/09 per e-mail request. Work has begun in AN Farm but has been delayed in part due to issues with the electrical outage and farm ventilation system, and the need to support waste retrieval (C-104 to AN-101). Additional time is therefore required to complete these tasks. David Bragg
05/26/2009 10:59	Owen, Annette	Change to Cause Analysis screen/Corrective Action plan.

05/26/2009 11:00	Owen, Annette	Extend CA .26 to 7/25/09 per e-mail request. The work associated with the corrective actions above will not begin until the next electrical outage at SY Farm, presently scheduled to begin in mid-June. Following completion of the electrical outage, work packages will undergo post work review and paperwork will be closed out. The extension will allow sufficient time to complete the facility modification and to review/closeout the work packages. D Bragg
05/26/2009 11:00	Owen, Annette	Extend CA .26 to 7/25/09 per e-mail request. The work associated with the corrective actions above will not begin until the next electrical outage at SY Farm, presently scheduled to begin in mid-June. Following completion of the electrical outage, work packages will undergo post work review and paperwork will be closed out. The extension will allow sufficient time to complete the facility modification and to review/closeout the work packages. D Bragg
05/26/2009 11:01	Owen, Annette	Extend CA .27 to 7/25/09 per e-mail request. The work associated with the corrective actions above will not begin until the next electrical outage at SY Farm, presently scheduled to begin in mid-June. Following completion of the electrical outage, work packages will undergo post work review and paperwork will be closed out. The extension will allow sufficient time to complete the facility modification and to review/closeout the work packages. D Bragg
05/26/2009 11:01	Owen, Annette	Extend CA .28 to 7/25/09 per e-mail request. The work associated with the corrective actions above will not begin until the next electrical outage at SY Farm, presently scheduled to begin in mid-June. Following completion of the electrical outage, work packages will undergo post work review and paperwork will be closed out. The extension will allow sufficient time to complete the facility modification and to review/closeout the work packages. D Bragg
05/26/2009 11:01	Owen, Annette	Extend CA .30 to 7/25/09 per e-mail request. The work associated with the corrective actions above will not begin until the next electrical outage at SY Farm, presently scheduled to begin in mid-June. Following completion of the electrical outage, work packages will undergo post work review and paperwork will be closed out. The extension will allow sufficient time to complete the facility modification and to review/closeout the work packages. D Bragg
05/26/2009 11:02	Owen, Annette	Extend CA .34 to 7/25/09 per e-mail request. The work associated with the corrective actions above will not begin until the next electrical outage at SY Farm, presently scheduled to begin in mid-June. Following completion of the electrical outage, work packages will undergo post work review and paperwork will be closed out. The extension will allow sufficient time to complete the facility modification and to review/closeout the work packages. D Bragg
05/27/2009 10:53	Glaman, Linda R	Change to Cause Analysis screen/Corrective Action plan.
05/27/2009 10:55	Glaman, Linda R	Extend CA .29 per attached email request. LBG The work associated with the corrective actions above will not begin until the next electrical outage at SY Farm, presently scheduled to begin in mid-June. Following completion of the electrical outage, work packages will undergo post work review and paperwork will be closed out. The extension will allow sufficient time to complete the facility modification and to review/closeout the work packages. D Bragg for M Knight 5-26-09
05/28/2009 15:55	Owen, Annette	Change to Cause Analysis screen/Corrective Action plan.

05/28/2009 15:56	Owen, Annette	Extend WRPS-PER-2008-0167.2 - Please assign a new due date of July 8, 2009. Work has been completed, however additional time is required to finish review and to complete/process paperwork. D Bragg
05/28/2009 15:57	Owen, Annette	Extend WRPS-PER-2008-0167.4 - Please assign a new due date of July 8, 2009. Work has been completed, however additional time is required to finish review and to complete/process paperwork. D Bragg
05/28/2009 15:57	Owen, Annette	Extend WRPS-PER-2008-0167.7 - Please assign a new due date of July 8, 2009. Work has been completed, however additional time is required to finish review and to complete/process paperwork. D Bragg
05/28/2009 15:58	Owen, Annette	Extend WRPS-PER-2008-0167.22 - Please assign a new due date of August 18, 2009. Material (breakers) has been procured but not yet received. Additional time is required for material delivery and to perform fieldwork. D Bragg
05/28/2009 15:58	Owen, Annette	Extend WRPS-PER-2008-0167.31 - Please assign a new due date of August 5, 2009. Work is dependant upon SY Farm outage schedule. D Bragg
06/19/2009 14:13	Glaman, Linda R	Change to Cause Analysis screen/Corrective Action plan.
06/19/2009 14:14	Glaman, Linda R	Extenc CA .24 to 8-15-09 PER attaeched email request. LBG Per direction of Mark Knight please extend the following PERs as described below: WRPS-PER-2008-0167.24 – Please extend to 08/15/09 as work will be performed during the SY Farm outage. David Bragg for M Knight 6/17/09
06/22/2009 08:18	Glaman, Linda R	Change to Cause Analysis screen/Corrective Action plan.
06/22/2009 08:20	Glaman, Linda R	extend CA .33 to 7-13-2009 per attached email request. LBG xtend To: 07/13/2009 Justification: Additional time is required to document 242-S K-1 fan motor wire size and type and to prepare and release ECN. T Jones for Mark Knight 6-18-09
06/30/2009 15:18	Owen, Annette	Change to Cause Analysis screen/Corrective Action plan.
06/30/2009 15:20	Owen, Annette	Extend CA .14 to 9/30/09 per request. The AP Farm outage is not schedule until the middle of August currently, we need more time to complete this action. H Judkins for R Brooks
06/30/2009 15:21	Owen, Annette	Extend CA .17 to 9/30/09 per request. The AP Farm outage is not schedule until the middle of August currently, we need more time to complete this action. H Judkins for R Brooks

-- End of Report --
07/08/2009 08:45 AM

Task# WRPS-PER-2008-0167

E-STARS[R] Report
Task Detail Report
07/08/2009 0846

TASK INFORMATION			
Task#	WRPS-PER-2008-0167		
Subject	RES; DNFSB letter regarding Hanford electrical systems		
Parent Task#		**Status**	Open
Reference		**Due**	10/11/2009
Originator	^PER Coordinator	**Priority**	Medium
Originator Phone		**Category**	PER
Origination Date	11/04/2008 1013	**Generic1**	None
Remote Task#		**Generic2**	None
Deliverable	PER Review	**Generic3**	None
Class	None	**View Permissions**	Global
Instructions	*No Instructions*		

ROUTING LISTS

1	Corrective actions Routing Lis	Active
	To launch Corrective actions.	
	• ^PER CAs - Assign - Awaiting Response - Due Date - 10/07/2009 0000 *Instructions:*	
2	Responsible Manager	Inactive
	Review the PER Screening Tab and Senior Manager Review for requested data. Complete the task in E-STARS in accordance with TFC-ESHQ-Q_C-C-01, and TFC-ESHQ-Q_ADM-C-12 Apparent Cause Analysis & Corrective Action Planning.	
	• Knight, Mark A - Assign - Completed with comments - 12/19/2008 1854 *Instructions:*	
3	Review Initial PER	Inactive
	Review New PER	
	• ^SO(Johnson, Brian A) - Review - Concur - 11/04/2008 1038 *Instructions:*	
	• ^PER Screening(Brown, Nancy L) - Review - Concur - 11/05/2008 1440 *Instructions:*	
	• ^Mgr Review(Owen, Annette) - Review - Concur - 11/06/2008 0914 *Instructions:*	

ATTACHMENTS

Attachments	1. DNFSB Electrical Letter Attachment.pdf 2. DNFSB Electrical Letter.pdf 3. Link to PER 4. RE_ WRPS-PER-2008-0167 _RES_.msg 5. WRPS-PER-2008-0167 EVENT & CAUSAL FACTORING CHART.pdf

COMMENTS

Poster	Knight, Mark A (Bragg, David A) - 12/19/2008 1854
	Completed

Task# WRPS-PER-2008-0167

	This PER has been evaluated and a total of 39 corrective actions will be launched to resolve the problems it identified. The PER originator declined involvement in the disposition of WRPS-PER-2008-0167.
Poster	^PER Coordinator (Owen, Annette) - 12/31/2008 1148
	Add 5 additional Corrective Actions per attached e-mail request.
Poster	^PER Coordinator (Owen, Annette) - 06/30/2009 1520
	Due Date Extension
	Extend CA .14 to 9/30/09 per request. The AP Farm outage is not schedule until the middle of August currently, we need more time to complete this action. H Judkins for R Brooks
Poster	^PER Coordinator (Owen, Annette) - 06/30/2009 1521
	Due Date Extension
	Extend CA .17 to 9/30/09 per request. The AP Farm outage is not schedule until the middle of August currently, we need more time to complete this action. H Judkins for R Brooks

TASK DUE DATE HISTORY

Modified	06/30/2009 1521 - ^PER Coordinator	**New Due Date**	10/11/2009 0000
Modified	06/30/2009 1520 - ^PER Coordinator	**New Due Date**	10/11/2009 0000
Modified	12/30/2008 0929 - ^PER Coordinator	**New Due Date**	10/03/2009 0000
Modified	11/06/2008 0914 - ^PER Coordinator	**New Due Date**	12/19/2008 1630
Modified	11/06/2008 0914 - ^PER Coordinator	**New Due Date**	12/19/2008 1630
Modified	11/04/2008 1013 - ^PER Coordinator	**New Due Date**	11/06/2008 1630

SUB TASK HISTORY

Subtask#	WRPS-PER-2008-0167.1				
Subject	WRPS-PER-2008-0167; RES; Ensure ECN-725722-R0 is released in support of WFO-WO-07-3103. Reference: Issue 8.3.4 AN Farm Deliverable: Electronic				
Originator	^PER CAs				
	Routing List	*No Active Routing List*			
Subtask#	WRPS-PER-2008-0167.2				
Subject	WRPS-PER-2008-0167; RES; Perform work package WFO-WO-07-3103. Deliverable: Copy of work record.				
Originator	^PER CAs				
	Routing List	Corrective Action			
		Assignee	Brooks, Rocky L	**Response**	Completed w/Com
		Assignee	Knight, Mark A	**Response**	
Subtask#	WRPS-PER-2008-0167.3				
Subject	WRPS-PER-2008-0167; RES; Ensure ECN in support of Work Package TFC-WO-08-0276 (to install fused disconnect) is released. Deliverable: Electronic c				
Originator	^PER CAs				
	Routing List	*No Active Routing List*			
Subtask#	WRPS-PER-2008-0167.4				
Subject	WRPS-PER-2008-0167; RES; Perform work package TFC-WO-08-0276. Deliverable: Copy of work record.				

Task# WRPS-PER-2008-0167

Originator	^PER CAs				
	Routing List	Corrective Action			
		Assignee	Brooks, Rocky L	**Response**	Completed w/Com
		Assignee	Knight, Mark A	**Response**	
Subtask#	WRPS-PER-2008-0167.5				
Subject	WRPS-PER-2008-0167; RES; Ensure ECN in support of Work Package TFC-WO-08-0277 is released. Deliverable: Electronic copy of released ECN. Referen				
Originator	^PER CAs				
	Routing List	*No Active Routing List*			
Subtask#	WRPS-PER-2008-0167.6				
Subject	WRPS-PER-2008-0167; RES; Perform work package TFC-WO-08-0277. Deliverable: Copy of work record. Reference: Issue 8.4.5				
Originator	^PER CAs				
	Routing List	*No Active Routing List*			
Subtask#	WRPS-PER-2008-0167.7				
Subject	WRPS-PER-2008-0167; RES; Perform work package WDL-110523. Deliverable: Copy of work record. Re				
Originator	^PER CAs				
	Routing List	Corrective Action			
		Assignee	Brooks, Rocky L	**Response**	Completed w/Com
		Assignee	Knight, Mark A	**Response**	
Subtask#	WRPS-PER-2008-0167.8				
Subject	WRPS-PER-2008-0167; RES; Prepare engineering technical evaluation for cable runs identified in Issue 8.5.3.6 (AN Farm). Deliverable: Electronic cop				
Originator	^PER CAs				
	Routing List	*No Active Routing List*			
Subtask#	WRPS-PER-2008-0167.9				
Subject	WRPS-PER-2008-0167; RES; Ensure ECN-726001-R0 in support of Work Package TFC-WO-08-2307 is released. Deliverable: Electronic copy of released ECN.				
Originator	^PER CAs				
	Routing List	*No Active Routing List*			
Subtask#	WRPS-PER-2008-0167.10				
Subject	WRPS-PER-2008-0167; RES; Perform work package TFC-WO-08-2307. Deliverable: Copy of work record. Reference: Issue 8.1.2 AP Farm				
Originator	^PER CAs				
	Routing List	Corrective Action			
		Assignee	Brooks, Rocky L	**Response**	
		Assignee	Knight, Mark A	**Response**	
Subtask#	WRPS-PER-2008-0167.11				
Subject	WRPS-PER-2008-0167; RES; Ensure ECN-725942-R0 in support of Work Package TFC-WO-08-2309 is released.				

Task# WRPS-PER-2008-0167

Originator	^PER CAs				
	Routing List	*No Active Routing List*			
Subtask#	WRPS-PER-2008-0167.12				
Subject	WRPS-PER-2008-0167; RES; Perform work package TFC-WO-08-2309. Deliverable: Copy of work record. Reference: Issue 8.1.4 AP Farm				
Originator	^PER CAs				
	Routing List	Corrective Action			
		Assignee	Brooks, Rocky L	**Response**	
		Assignee	Knight, Mark A	**Response**	
Subtask#	WRPS-PER-2008-0167.13				
Subject	WRPS-PER-2008-0167; RES; Ensure ECN-726031-R0 in support of Work Package TFC-WO-08-2656 is released. Deliverable: Electronic copy of released ECN.				
Originator	^PER CAs				
	Routing List	*No Active Routing List*			
Subtask#	WRPS-PER-2008-0167.14				
Subject	WRPS-PER-2008-0167; RES; Perform work package Work Package TFC-WO-08-2656 Deliverable: Copy of wo				
Originator	^PER CAs				
	Routing List	Corrective Action			
		Assignee	Brooks, Rocky L	**Response**	
		Assignee	Knight, Mark A	**Response**	
Subtask#	WRPS-PER-2008-0167.15				
Subject	WRPS-PER-2008-0167; RES; Perform work package Work Package WDL-111851 Deliverable: Copy of work record. Reference: Issue 8.5.4 AP Farm				
Originator	^PER CAs				
	Routing List	Corrective Action			
		Assignee	Brooks, Rocky L	**Response**	
		Assignee	Knight, Mark A	**Response**	
Subtask#	WRPS-PER-2008-0167.16				
Subject	WRPS-PER-2008-0167; RES; Perform work package Work Package WDL-110917 Deliverable: Copy of work record. Reference: Issue 8.5.4 & 8.5.5.2 AW Farm				
Originator	^PER CAs				
	Routing List	Corrective Action			
		Assignee	Brooks, Rocky L	**Response**	
		Assignee	Knight, Mark A	**Response**	
Subtask#	WRPS-PER-2008-0167.17				
Subject	WRPS-PER-2008-0167; RES; Action: Perform work package to replace breaker 101 in AP Farm (reference n				
Originator	^PER CAs				
	Routing List	Corrective Action			
		Assignee	Brooks, Rocky L	**Response**	

Task# WRPS-PER-2008-0167

		Assignee	Knight, Mark A	**Response**	
Subtask#	WRPS-PER-2008-0167.18				
Subject	WRPS-PER-2008-0167; RES; Ensure ECN in support of Work Package associated with new work request TFC-WR-08-2310 is released. Deliverable: Electronic				
Originator	^PER CAs				
	Routing List	*No Active Routing List*			
Subtask#	WRPS-PER-2008-0167.19				
Subject	WRPS-PER-2008-0167; RES; Ensure ECN in support of Work Package TFC-WO-08-2312 is released. Deliverable: Electronic copy of released ECN. Referen				
Originator	^PER CAs				
	Routing List	*No Active Routing List*			
Subtask#	WRPS-PER-2008-0167.20				
Subject	WRPS-PER-2008-0167; RES; Perform work package TFC-WO-08-2312 Deliverable: Copy of work record. Reference: Issue 8.1.2 AY Farm				
Originator	^PER CAs				
	Routing List	*No Active Routing List*			
Subtask#	WRPS-PER-2008-0167.21				
Subject	WRPS-PER-2008-0167; PER; Ensure ECN-726043-R0 in support of work package TFC-WO-08-2313 is released.				
Originator	^PER CAs				
	Routing List	*No Active Routing List*			
Subtask#	WRPS-PER-2008-0167.22				
Subject	WRPS-PER-2008-0167; RES; Perform work package TFC-WO-08-2313 Deliverable: Copy of work record.				
Originator	^PER CAs				
	Routing List	Corrective Action			
		Assignee	Brooks, Rocky L	**Response**	
		Assignee	Knight, Mark A	**Response**	
Subtask#	WRPS-PER-2008-0167.23				
Subject	WRPS-PER-2008-0167; RES; Evaluate adequacy of insulation associated with Issue 8.5.4.4 for AY Farm wiring, and provide results to the Electrical Disc				
Originator	^PER CAs				
	Routing List	*No Active Routing List*			
Subtask#	WRPS-PER-2008-0167.24				
Subject	WRPS-PER-2008-0167; RES; Perform work package TFC-WO-08-2315 Deliverable: Copy of work record.				
Originator	^PER CAs				
	Routing List	Corrective Action			
		Assignee	Brooks, Rocky L	**Response**	
		Assignee	Knight, Mark A	**Response**	
Subtask#	WRPS-PER-2008-0167.25				

Task# WRPS-PER-2008-0167

Subject	WRPS-PER-2008-0167; RES; Prepare ECN to install the correct size fuses at the EC-1-1 Fan Motor. Deliverable: Electronic copy of released ECN. Re				
Originator	^PER CAs				
	Routing List	*No Active Routing List*			
Subtask#	WRPS-PER-2008-0167.26				
Subject	WRPS-PER-2008-0167; RES; Prepare/perform work package to replace fuse in EX-C-1 (EC-1-1 fan motor)				
Originator	^PER CAs				
	Routing List	Corrective Action			
		Assignee	Ficklin, Jim	**Response**	
		Assignee	Knight, Mark A	**Response**	
Subtask#	WRPS-PER-2008-0167.27				
Subject	WRPS-PER-2008-0167; RES; Perform work package TFC-WO-08-2316 Deliverable: Copy of work record.				
Originator	^PER CAs				
	Routing List	Corrective Action			
		Assignee	Brooks, Rocky L	**Response**	
		Assignee	Knight, Mark A	**Response**	
Subtask#	WRPS-PER-2008-0167.28				
Subject	WRPS-PER-2008-0167; RES; Perform work package TFC-WO-08-2317. Deliverable: Copy of work record.				
Originator	^PER CAs				
	Routing List	Corrective Action			
		Assignee	Brooks, Rocky L	**Response**	
		Assignee	Knight, Mark A	**Response**	
Subtask#	WRPS-PER-2008-0167.29				
Subject	WRPS-PER-2008-0167; RES; Perform work package TFC-WO-08-2318 Deliverable: Copy of work record.				
Originator	^PER CAs				
	Routing List	Corrective Action			
		Assignee	Brooks, Rocky L	**Response**	
		Assignee	Knight, Mark A	**Response**	
Subtask#	WRPS-PER-2008-0167.30				
Subject	WRPS-PER-2008-0167; RES; Perform work package WFO-WO-08-0002 to verify lugs on the T-1 transformer a				
Originator	^PER CAs				
	Routing List	Corrective Action			
		Assignee	Brooks, Rocky L	**Response**	
		Assignee	Knight, Mark A	**Response**	
Subtask#	WRPS-PER-2008-0167.31				
Subject	WRPS-PER-2008-0167; RES; Perform work package TFC-WO-08-2319 Deliverable: Copy of				

Task# WRPS-PER-2008-0167

	work record.				
Originator	^PER CAs				
	Routing List	Corrective Action			
		Assignee	Brooks, Rocky L	**Response**	
		Assignee	Knight, Mark A	**Response**	
Subtask#	WRPS-PER-2008-0167.32				
Subject	WRPS-PER-2008-0167; RES; Perform work package (reference new work request TFC-WO-08-0456) to determine the 242-S K-1 fan motor wire size and type.				
Originator	^PER CAs				
	Routing List	*No Active Routing List*			
Subtask#	WRPS-PER-2008-0167.33				
Subject	WRPS-PER-2008-0167; RES; Prepare ECN to document the 242-S K-1 fan motor wire size and type. Deli				
Originator	^PER CAs				
	Routing List	Corrective Action			
		Assignee	Nguyen, Toan H	**Response**	
		Assignee	Knight, Mark A	**Response**	
Subtask#	WRPS-PER-2008-0167.34				
Subject	WRPS-PER-2008-0167; RES; Perform work package CLO-WO-08-2367 Deliverable: Copy of work record.				
Originator	^PER CAs				
	Routing List	Corrective Action			
		Assignee	Ficklin, Jim	**Response**	Withdrawn
		Assignee	Knight, Mark A	**Response**	Withdrawn
		Assignee	Brooks, Rocky L	**Response**	
		Assignee	Knight, Mark A	**Response**	
Subtask#	WRPS-PER-2008-0167.35				
Subject	WRPS-PER-2008-0167; RES; Ensure ECN-726036-R0 to document SY Farm transformer loads and nameplate data is released. Deliverable: Electronic copy of				
Originator	^PER CAs				
	Routing List	*No Active Routing List*			
Subtask#	WRPS-PER-2008-0167.36				
Subject	WRPS-PER-2008-0167; RES; Revise RPP-RPT-38265 Rev 0 to include an evaluation of all 78 identified electrical discrepancies and to document which of th				
Originator	^PER CAs				
	Routing List	*No Active Routing List*			
Subtask#	WRPS-PER-2008-0167.37				
Subject	WRPS-PER-2008-0167; RES; Revise RPP-RPT-38265 Rev 1 to include an evaluation of electrical discrepancies for the four additional electrical load calcu				
Originator	^PER CAs				
	Routing List	Corrective Action			

Task# WRPS-PER-2008-0167

		Assignee	Hamm, Earnest R	**Response**	
		Assignee	Knight, Mark A	**Response**	
Subtask#	WRPS-PER-2008-0167.38				
Subject	WRPS-PER-2008-0167; RES; Revise RPP-RPT-38265 Rev 2 to include an evaluation of all identified electrical discrepancies, to document which of these is				
Originator	^PER CAs				
	Routing List	Corrective Action			
		Assignee	Hamm, Earnest R	**Response**	
		Assignee	Knight, Mark A	**Response**	
Subtask#	WRPS-PER-2008-0167.39				
Subject	WRPS-PER-2008-0167; RES; Evaluate adequacy of insulation associated with Issue 8.6.2.1 for SY Farm wiring, and provide results to the Electrical Disci				
Originator	^PER CAs				
	Routing List	*No Active Routing List*			
Subtask#	WRPS-PER-2008-0167.40				
Subject	WRPS-PER-2008-0167; RES; Ensure ECN in support of Work Package TFC-WO-08-2316 (to remove power from DACS Trailer) is released. Deliverable: Electro				
Originator	^PER CAs				
	Routing List	*No Active Routing List*			
Subtask#	WRPS-PER-2008-0167.41				
Subject	WRPS-PER-2008-0167; RES; Ensure ECN in support of Work Package TFC-WO-08-2317 (to replace 200A breaker with 150 A breaker) is released. Deliverable				
Originator	^PER CAs				
	Routing List	*No Active Routing List*			
Subtask#	WRPS-PER-2008-0167.42				
Subject	WRPS-PER-2008-0167; RES; Ensure ECN in support of Work Package TFC-WO-08-2318 (to replace 80A breaker EDS-DP-118 with a 40A breaker) is released. D				
Originator	^PER CAs				
	Routing List	*No Active Routing List*			
Subtask#	WRPS-PER-2008-0167.43				
Subject	WRPS-PER-2008-0167; RES; Ensure ECN in support of MCC-E-001 breaker replacement is released OR provide justification of breaker acceptability. Deli				
Originator	^PER CAs				
	Routing List	*No Active Routing List*			
Subtask#	WRPS-PER-2008-0167.44				
Subject	WRPS-PER-2008-0167; RES; Ensure ECN in support of Work Package TFC-WO-08-2319 (to replace 125A BKR-104 with a 100A breaker) is released. Deliverabl				
Originator	^PER CAs				
	Routing List	*No Active Routing List*			

-- end of report --

DEFENSE NUCLEAR FACILITIES SAFETY BOARD

Staff Issue Report

August 7, 2008

MEMORANDUM FOR: T. J. Dwyer, Technical Director

COPIES: Board Members

FROM: A. Gwal

SUBJECT: Review of Electrical Systems, Plutonium Finishing Plant and Tank Farms, at the Hanford Site

This report documents a review by the staff of the Defense Nuclear Facilities Safety Board (Board) of the electrical systems of the Plutonium Finishing Plant (PFP) and the Tank Farms at the Hanford Site. During June 3–5, 2008, staff members A. Gwal, S. Lewis, D. Eyler, E. Rozek, and R. Quirk (Site Representative) assessed the design and construction of these electrical systems with the participation of representatives of the Department of Energy (DOE) Richland Operations Office (DOE-RL) and its contractor for PFP, and DOE's Office of River Protection (ORP) and its contractor for the Tank Farms. The staff also reviewed documents received in July 2008 that related to electrical calculations and studies.

Plutonium Finishing Plant. Since the shutdown of the PFP complex in 1996, various deactivation and decommissioning activities have been performed. Originally, the buildings in the complex were to be demolished to slab-on-grade by September 2009. Funding constraints delayed this end state to 2016. The contractor evaluated the impact of this delay by conducting life extension studies for facility systems. The plant life extension (PLEX) program may include replacing or upgrading critical operational structures, systems, and components (SSCs). The contractor's evaluations included all critical SSCs except the electrical cables. Some of the electrical equipment is 25–60 years old.

Discussions held by the Board's staff with personnel from DOE-RL and the contractor focused mainly on the PLEX program. The staff also performed a walkdown of the facility to assess the condition of selected safety-related electrical equipment and cables. The following observations resulted from the discussions held and the walkdown of the facility.

Cable Condition Monitoring Program—In early 2007, PFP used various means to extend the life of the safety-related critical electrical equipment of the electrical distribution system. However, the insulated electrical cables were not evaluated as a critical SSC during the PLEX studies because PFP personnel believed the conductors normally do not fail unless they are disturbed. Safety-related cables at PFP vary in age and may be 20–60+ years old; they are approaching or have exceeded their intended service life. The Board's staff disagrees with the

contractor's position regarding the electrical cables. As cables age, their electrical characteristics may degrade to an unacceptable level, thereby decreasing the reliability of both the cables and the systems they support. Because these aged cables provide power for a number of facility safety systems, the staff believes it would be prudent to establish the remaining life of the cables and consider incorporating into the existing PLEX program the capability to monitor their condition. Monitoring the condition of the cables could improve the service life and reliability of electrical equipment by making it possible to detect damaged and deteriorating power, instrumentation, and control cables prior to equipment failure.

In a teleconference with PFP personnel on September 13, 2007, the Board's staff expressed concern that age-related degradation of the cables could lead to the failure of safety-significant systems. The staff suggested the use of industry practices to estimate the remaining life of the safety-related cables and the application of the Institute of Electrical and Electronics Engineers (IEEE) Standard-1205, *IEEE Guide for Assessing, Monitoring and Mitigating Aging Effects on Class 1E Equipment Used in Nuclear Power Generating Stations*, for all of the electrical equipment. The staff also suggested that programs at the Savannah River Site (SRS) could provide a suitable model to follow. Following the September 2007 teleconference, PFP personnel contacted SRS and the Electric Power Research Institute to obtain details on their approaches to the assessment of aging electrical cables and obtained related documentation.

During the staff's recent review, PFP personnel stated they are evaluating the need for a program to monitor the condition of the electrical cables. If funded, the program would probably include testing to determine the remaining life of the cables. The Board's staff believes the approach taken thus far is appropriate.

Unprotected 480-Volt Switchgear—Safety-significant switchgear in Room 266 in Building 234-5Z is relied upon to provide power for safety-significant loads. The switchgear is designed with openings on the tops of the cabinets and vents on the front and back panels for heat dissipation. These openings are located under the sprinkler heads of the fire suppression system. Water spray resulting from an activation of the sprinkler system would likely penetrate the switchgear and could generate a short circuit that could damage the switchgear, create hazardous conditions, and leave safety-significant loads without power. PFP personnel agreed to evaluate this issue.

Additionally, the Board's staff observed that water could have leaked inside the 480-volt switchgear in Room 500 of Building 291Z. PFP personnel agreed to evaluate the switchgear for damage.

Hydrogen Explosion Hazard in the Battery Room—Batteries produce hydrogen gas during normal operation, and proper ventilation in the battery room is needed to ensure that hydrogen does not accumulate in quantities sufficient to create the potential for an explosion. American National Standards Institute C2, *National Electric Safety Code,* requires adequate ventilation in battery rooms to prevent hydrogen explosions. Battery Room 269 in Building 234-5Z has an exhaust duct to remove the hydrogen generated during normal operation. However, the opening of this duct is approximately 2 feet below the ceiling. This configuration

could allow the accumulation of hydrogen within this 2-foot space. This space also includes electrical cables that could serve as an ignition source. The Board's staff suggested that PFP personnel evaluate design modifications that would prevent hydrogen accumulation in the 2-foot space between the duct and the ceiling.

Additionally, the Board's staff noted an open-filament space heater above lead-acid batteries in the diesel generator room (Room 2721). An explosion could result if hydrogen of sufficient concentration produced by the lead-acid batteries were to come in contact with the open filament of the space heater. PFP personnel indicated they will evaluate this issue.

Routine Inspection—Because of aged electrical equipment, the Board's staff suggested the use of thermography devices for routine inspection of electrical switchgear, motor control centers, panel boards, and control panels. These devices can detect hot spots in electrical equipment and support the initiation of timely corrective action to prevent electrical failure, fire, and exposure of workers to possible arc-flash conditions. PFP personnel had considered using such devices but had not done so because of other priorities and funding constraints. They have agreed to reevaluate the use of these devices.

Tank Farms. The staff's review of electrical distribution systems at the Tank Farms was limited to those Tank Farms containing the 28 double-shell tanks (DSTs). Discussions between the staff and personnel from the Tank Farms focused mainly on the design of the electrical distribution systems, including the related calculations and studies. The staff also performed walkdowns of the AP, AY, and AZ Tank Farms to assess the condition of selected electrical equipment and cables. The following observations resulted from these discussions and walkdowns.

Electrical Calculations and Studies—The Board's staff reviewed load flow analyses, short-circuit calculations, and protective device coordination studies for all the DST Tank Farms. These calculations and studies, which were performed by the contractor in 2001, 2005, and 2007, identified many deficient design conditions. Examples of these deficient conditions include non-compliance with National Fire Protection Association (NFPA)-70, *National Electrical Code*, changes in cable size, improper modifications and settings of circuit breakers, an undersized transformer for the SY Tank Farm, and improper fuse changes. If not corrected, some of these deficiencies could create safety issues.

The contractor identified 78 design issues from the calculations and studies for the Tank Farms. According to Tank Farm personnel, 29 issues have been resolved, 39 require field work and verification, and 10 require engineering evaluation. Typically, design deficiencies identified by calculations are resolved soon after the calculations have been completed. However, several outstanding design deficiencies may date back to 2001. The Board's staff suggests that all of the design deficiencies be resolved as soon as possible.

Non-Safety Electrical System Supplying Power to Safety-Significant Loads—The primary ventilation systems for the DSTs are classified as safety-significant SSCs to prevent or mitigate accidents involving flammable gas. Electrical power is necessary to support the operation of the

exhaust fans for the primary ventilation systems, but the plant electrical distribution system supplying these fans is not classified as a safety-significant support SSC. The following DOE directives provide guidance related to the classification of support SSCs:

- DOE Guide 420.1-1, *Nonreactor Nuclear Safety Design Criteria and Explosives Safety Criteria Guide for Use with DOE O 420.1, Facility Safety*, states: "Support SSCs to safety-significant SSCs that mitigate or prevent accidents with the potential for significant onsite consequences should be classified as safety-significant if their failures prevent a safety-significant SSC from performing its safety functions."

- A requirement in DOE Standard 3009-2004, *Preparation Guide for U.S. Department of Energy Nonreactor Nuclear Facility Documented Safety Analyses* (DSA), is: "Identify SSCs whose failure would result in a safety-significant SSC losing the ability to perform its required safety function. These SSCs would also be considered safety-significant SSCs for the specific accident conditions or general rationale for which the safety-significant designation was made originally."

The DSA refers to a calculation that estimates the time required to reach 100 percent of the lower flammability limit (LFL) to be more than 38 days under zero ventilation conditions for the limiting tank. The DSA notes that if the primary ventilation system for a DST is not operating because of an interruption of electrical power, action shall be taken to restore electrical power (e.g., bypass routing or temporary generators) before flammable gas conditions in the tank reach a level of concern.

The Board's staff reviewed the electrical systems of all the DST Tank Farms and observed that the AY/AZ Tank Farms, which have the most limiting generation of flammable gas, have a diesel generator as a backup source for electrical power. The staff noted that this system could be upgraded to safety-significant status with little if any physical modification. However, none of the other DST Tank Farms have backup diesel generators, and they depend on alternative sources for electrical power in the event of a loss of normal electrical power. Although portable generators could be used, no formal procedure exists to ensure that the appropriate number of generators is always available to meet the requirements of all the Tank Farms during a total loss of electrical power for an extended period of time.

The Board's staff concurs with the decision not to require that power to the DST ventilation systems be classified as safety-significant because the time to reach LFL conditions is long. Waste retrieval and transfer activities can reduce this time, however. If the time to reach LFL conditions is significantly reduced by retrieval and transfer activities, the staff believes it would be prudent for ORP to reevaluate the functional classification of the electrical power supply and distribution systems.

A.J. Eggenberger, Chairman
John E. Mansfield, Vice Chairman
Joseph F. Bader
Larry W. Brown
Peter S. Winokur

DEFENSE NUCLEAR FACILITIES SAFETY BOARD

625 Indiana Avenue, NW, Suite 700 Washington, D.C. 20004-2901
(202) 694-7000

September 17, 2008

The Honorable James A. Rispoli
Assistant Secretary for Environmental Management
U.S. Department of Energy
1000 Independence Avenue, SW
Washington, DC 20585-0113

Dear Mr. Rispoli:

The Defense Nuclear Facilities Safety Board (Board) remains focused on the safety of aging electrical systems in nuclear facilities at the Hanford Site. As part of this focus, members of the Board's staff visited the Hanford Site recently to review electrical systems at the high level waste (HLW) Tank Farms and the Plutonium Finishing Plant (PFP). Enclosed is a report containing observations made by the staff—observations which include deficiencies that could compromise safety if not corrected.

The main issue at the Tank Farms is the existence of several deficient design conditions affecting electrical systems. Examples of these design deficiencies include non-compliance with national codes, improper modifications and settings of circuit breakers, and improper fuses. Some of these deficiencies were identified by electrical calculations and studies conducted years ago, but the deficiencies remain uncorrected.

The Board notes that power to the safety-significant ventilation system for double-shell tanks in the Tank Farms is not classified as safety-significant. This situation is acceptable as long as the time to reach flammable conditions in the tank head space is on the order of a month or longer. However, waste retrieval and transfer operations can reduce this time. If the time to reach flammable conditions is significantly reduced by these operations, the Department of Energy (DOE) should reevaluate the functional classification of the electrical power supply and distribution systems.

The Board's staff also reexamined electrical safety at PFP. The main safety concerns at PFP, identified during a walkdown of the electrical systems, are (1) safety-related cables may have exceeded their design life, (2) the potential for short-circuiting safety-significant switchgear, and (3) a potential explosion from hydrogen produced by lead-acid batteries.

The Board believes that the identified safety-related deficiencies in electrical systems at PFP should be resolved in order to ensure reliable operation. Regarding deficient design conditions at the Tank Farms, the Board believes DOE should complete an evaluation of deficient design conditions as soon as possible. For those deficiencies posing electrical safety risks, DOE should implement corrective actions on a priority basis. Pursuant to 42 U.S.C. § 2286b(d), the Board requests that DOE brief the Board within 90 days of receipt of this letter on the status of efforts to correct the deficiencies in electrical safety at PFP and the Tank Farms at Hanford.

Sincerely,

A. J. Eggenberger
Chairman

Enclosure

c: Ms. Shirley J. Olinger
Mr. David A. Brockman
Mr. Mark B. Whitaker, Jr.

WRPS-PER-2008-0167 EVENT AND CAUSAL FACTORING CHART

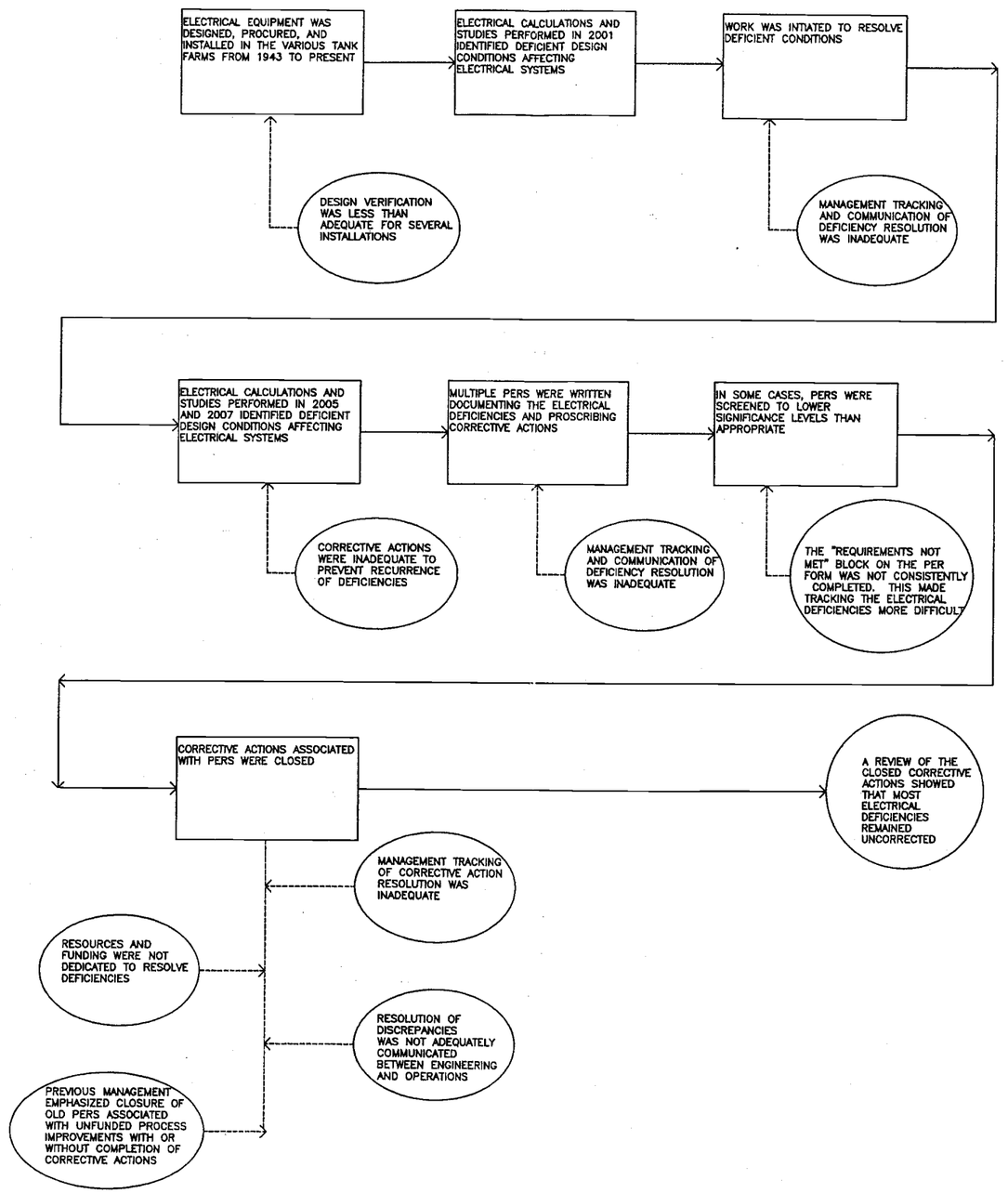

Message

From: Bragg, David A
Sent: Wednesday, December 31, 2008 9:46 AM
To: Owen, Annette
Cc: Nelson, Richard E; Roberts, Mark A
Subject: RE: WRPS-PER-2008-0167 (RES)

Annette,

Please add the following 5 new corrective actions. Thanks for your help.

David

New Corrective Action 1:

Ensure ECN in support of Work Package TFC-WO-08-2316 (to remove power from DACS Trailer) is released.
Deliverable: Electronic copy of released ECN.
Reference: Issue 8.1.4 SY Farm
Assign to Rick Nelson with Due Date of 05/07/09

New Corrective Action 2:

Ensure ECN in support of Work Package TFC-WO-08-2317 (to replace 200A breaker with 150 A breaker) is released.
Deliverable: Electronic copy of released ECN.
Reference: Issue 8.1.6 SY Farm
Assign to Rick Nelson with Due Date of 04/23/09

New Corrective Action 3:

Ensure ECN in support of Work Package TFC-WO-08-2318 (to replace 80A breaker EDS-DP-118 with a 40A breaker) is released.
Deliverable: Electronic copy of released ECN.
Reference: Issue 8.1.10 SY Farm
Assign to Rick Nelson with Due Date of 05/07/09

New Corrective Action 4:

Ensure ECN in support of MCC-E-001 breaker replacement is released OR provide justification of breaker acceptability.
Deliverable: Electronic copy of released ECN or written justification in comments section of corrective action to document breaker acceptability.
Reference: Issue 8.1.14 SY Farm
Assign to Rick Nelson with Due Date of 04/07/09

New Corrective Action 5:

Ensure ECN in support of Work Package TFC-WO-08-2319 (to replace 125A BKR-104 with a 100A breaker) is released.
Deliverable: Electronic copy of released ECN.
Reference: Issue 8.1.15 SY Farm
Assign to Rick Nelson with Due Date of 05/13/09

Task# WRPS-PER-2008-0167.1

E-STARS[R] Report
Task Detail Report
07/08/2009 0918

TASK INFORMATION			
Task#	WRPS-PER-2008-0167.1		
Subject	WRPS-PER-2008-0167; RES; Ensure ECN-725722-R0 is released in support of WFO-WO-07-3103. Reference: Issue 8.3.4 AN Farm Deliverable: Electronic		
Parent Task#	WRPS-PER-2008-0167	**Status**	CLOSED 01/08/2009
Reference	WRPS-PER-2008-0167	**Due**	01/26/2009
Originator	^PER CAs	**Priority**	Medium
Originator Phone		**Category**	PER
Origination Date	12/30/2008 0929	**Generic1**	None
Remote Task#		**Generic2**	None
Deliverable	PER Review	**Generic3**	None
Class	None	**View Permissions**	Global
Instructions	*No Instructions*		

ROUTING LISTS

1	Corrective Action	Inactive
	Ensure ECN-725722-R0 is released in support of WFO-WO-07-3103. Reference: Issue 8.3.4 AN Farm Deliverable: Electronic Copy of released ECN RESPONSIBLE MANAGER: When this corrective action is complete, enter a closure statement in E-STARS and close the E-STARS subtask. Refer to the Problem Evaluation Request procedure TFC-ESHQ-Q-C-C-01, Section 4.4 for closure documentation requirements	
	• Nelson, Rick E - Assign - Completed with comments - 01/08/2009 0957 *Instructions:*	
	• Knight, Mark A - Review - Concur with comments - 01/08/2009 0959 *Instructions:*	

ATTACHMENTS

Attachments	1. DNFSB Electrical Letter Attachment.pdf 2. DNFSB Electrical Letter.pdf 3. Link to PER 4. RE_ WRPS-PER-2008-0167 _RES_.msg 5. WRPS-PER-2008-0167 EVENT & CAUSAL FACTORING CHART.pdf 6. WRPS-PER-2008-0167.1 CLOSURE ECN-725722-R0.pdf

COMMENTS

Poster	Nelson, Rick E (Bragg, David A) - 01/08/2009 0957
	Completed
	REQUIRED ACTION IS COMPLETED. SEE ATTACHMENT OF ECN-725722-R0 FOR OBJECTIVE EVIDENCE. PER ORIGINATOR DECLINED INVOLVEMENT IN THE DISPOSITION OF THIS PER.
Poster	Knight, Mark A (Bragg, David A) - 01/08/2009 0959
Editor	Knight, Mark A (Bragg, David A) - 01/08/2009 1002
	Concur
	REQUIRED ECN-725722-R0 WAS RELEASED AND IS ATTACHED AS OBJECTIVE EVIDENCE. PER

Task# WRPS-PER-2008-0167.1			
	ORIGINATOR DECLINED INVOLVEMENT IN THE DISPOSITION OF THIS PER.		
Poster	^PER CAs (Owen, Annette) - 01/08/2009 1348		
	CLOSED		
	Closure statement and attached documentation are adequate to close this action.		
TASK DUE DATE HISTORY			
Modified	12/30/2008 0929 - ^PER CAs	**New Due Date**	01/26/2009 0000
Modified	12/30/2008 0929 - ^PER CAs	**New Due Date**	10/03/2009 0000
SUB TASK HISTORY			
No Subtasks			

-- end of report --

CH2M HILL ENGINEERING CHANGE NOTICE

☐ DM ☒ FM ☐ TM

1a. ECN 725722 R 0

1b. Proj. ECN N/A - - R

2. Simple Modification	3. Design Inputs – For full ECNs, record information on the ECN-1 Form (not required for Simple Modifications)		4. Date
☒ Yes ☐ No			7/2/2008
5. Originator's Name, Organization, MSIN, & Phone No. Mazen Al-Wazani, East System Engineering, S5-07, 372-3869	6. PrHA Number No. 00380 R - 0 ☐ N/A	7. USQ Number No. TF - 08 - 1146 - D R - 0 ☐ N/A	8. Related ECNs N/A
9. Title Disconnecting Standard Hydrogen Monitoring System	10. Bldg. / Facility No. AN241	11. Equipment / Component ID AN241-EDS-DP-105	12. Approval Designator N/A
13. Engineering Documents/Drawings to be Changed (Incl. Sheet & Rev. Nos.) See block 18		14. Safety Designation ☐ SC ☐ SS ☒ GS ☐ N/A	15. Expedited/Off-Shift ECN? ☐ Yes ☒ No
16a. Work Package Number	16b. Modification Work Completed Responsible Engineer / Date	16c. Restored to Original Status (TM) N/A Responsible Engineer / Date	17. Fabrication Support ECN? ☐ Yes ☒ No

18. Description of the Change (Use ECN Continuation pages as needed)

H-14-030001, sh.1, R.24
H-2-71934, sh.6, Rev.10
H-2-73840, sh.1, Rev.4
H-14-030001, sh.11, Rev.9
H-2-71934, sh.3, Rev.13
H-2-71934, sh.7, Rev.2
H-2-71934, sh.2, Rev.17

Problem: The standard Hydrogen Monitoring (SHM) System is no longer in use but is still connected to the power distribution (EDS). The SHM system no longer required to be in service and will not be used again.

Solution: Physically remove these loads by lifting the leads in the AN241-EDS-DP-105. This will allow the EDS system to operate more efficiently, resolve any overloading issues and allow addition of new future loads. Also, the system not required to be maintained after removal.

Analysis: Since the SHM system is not used, the disconnecting loads causes no loading issues. Other DP-105 loads (Previously disconnected) removed from panelboard schedule as applicable.

19. Justification of the Change (Use ECN Continuation pages as needed)

Engineering Rework ☐ Yes ☒ No
Training Impact ☐ Yes ☒ No

The Standard Hydrogen Monitor System is no longer in use but is still connected at the power distribution system and must be counted in total load and maintained. This will save on maintenance costs and free up space for new loads in the future.

20. ECN Category

☐ Direct Revision
☒ Supplemental
☐ Void/Cancel

ECN Type

☐ Supersedure
☐ Revision

21. Distribution

Name	MSIN	Name	MSIN
MG Al-Wazani	S5-27	Bob Nicholson	S5-25
LA Flowers	S5-12	TP Moberg	R3-26
BH Thacker	S5-07		
Rick Nelson	S5-07		
Lisa Domnoske-Rauch	S5-27		
Ken Ewer	S5-07		
G. Paintner	S5-07		

Release Stamp

DATE: JUL 18 2008
STA: 3
HANFORD RELEASE
ID: 18

CH2M HILL ENGINEERING CHANGE NOTICE	1a. ECN 725722 R 0
Page 2 of 15 ☐ DM ☒ FM ☐ TM	1b. Proj. ECN N/A - - R

22. Revisions Planned (Include a brief description of the contents of each revision)

N/A

Note: All revisions shall have the approvals of the affected organizations as identified in block 12 "Approval Designator," on page 1 of this ECN.

23. Commercial Grade Item Dedication Numbers (associated with this design change)

N/A

24. Engineering Data Transmittal Numbers (associated with this design change, e.g., new drawings, new documents)

N/A

25. Other Non Engineering (not in HDCS) documents that need to be modified due to this change

Type of Document	Document Number	Update Completed On	Responsible Engineer (print/sign and date)
Alarm Response Procedure	N/A		
Operations Procedure	N/A		
Maintenance Procedure	N/A		

26. Field Change Notice(s) Used?

☐ **Yes** ☒ **No**

If Yes, Record Information on the ECN-2 Form, attach form(s), include a description of the interim resolution on ECN Page 1, block 18, and identify permanent changes.

NOTE: ECNs are required to record and approve all FCNs issued. If the FCNs have not changed the original design media then they are just incorporated into the design media via an ECN. If the FCN did change the original design media then the ECN will include the necessary engineering changes to the original design media.

27. Design Verification Required?

☐ **Yes** ☒ **No**

If Yes, as a minimum attach the one page checklist from TFC-ENG-DESIGN-P-17.

28. Approvals

Facility/Project Signatures		Date	A/E Signatures		Date
Resp. Engineer	Mazen Al-Wazani mazen	7/17/08	Originator/Design Agent		
Resp. Manager	Lisa Domnoske-Rauch Lisa Domnoske-Rauch	7/17/08	Professional Engineer		
Quality Assurance			Project Engineer		
IS&H Engineer			Quality Assurance		
NS&L Engineer			Safety		
Environ. Engineer	Kenneth L. Ewer		Designer		
Engineering Checker	KENNETH EWER	7/17/08	Environ. Engineer		
Other	W-314 TRMOBERG TRMoberg	7/18/08	Other		
Other			Other		
Other			DEPARTMENT OF ENERGY / OFFICE OF RIVER PROTECTION		
Other			Signature or a Control Number that tracks the Approval Signature		
Other					
Other			ADDITIONAL SIGNATURES		
Other					
Other					

CH2M HILL ENGINEERING CHANGE NOTICE CONTINUATION SHEET	1a. ECN 725722 R 0
Page 3 of 15 DM☐ FM☒ TM☐	1b. Proj. ECN W- N/A- R

Document/Drawing No. H-2-030001 Sheet 1 Revision 24

(A seperate ECN Continuation page shall be used for each document/drawing to be modified.)

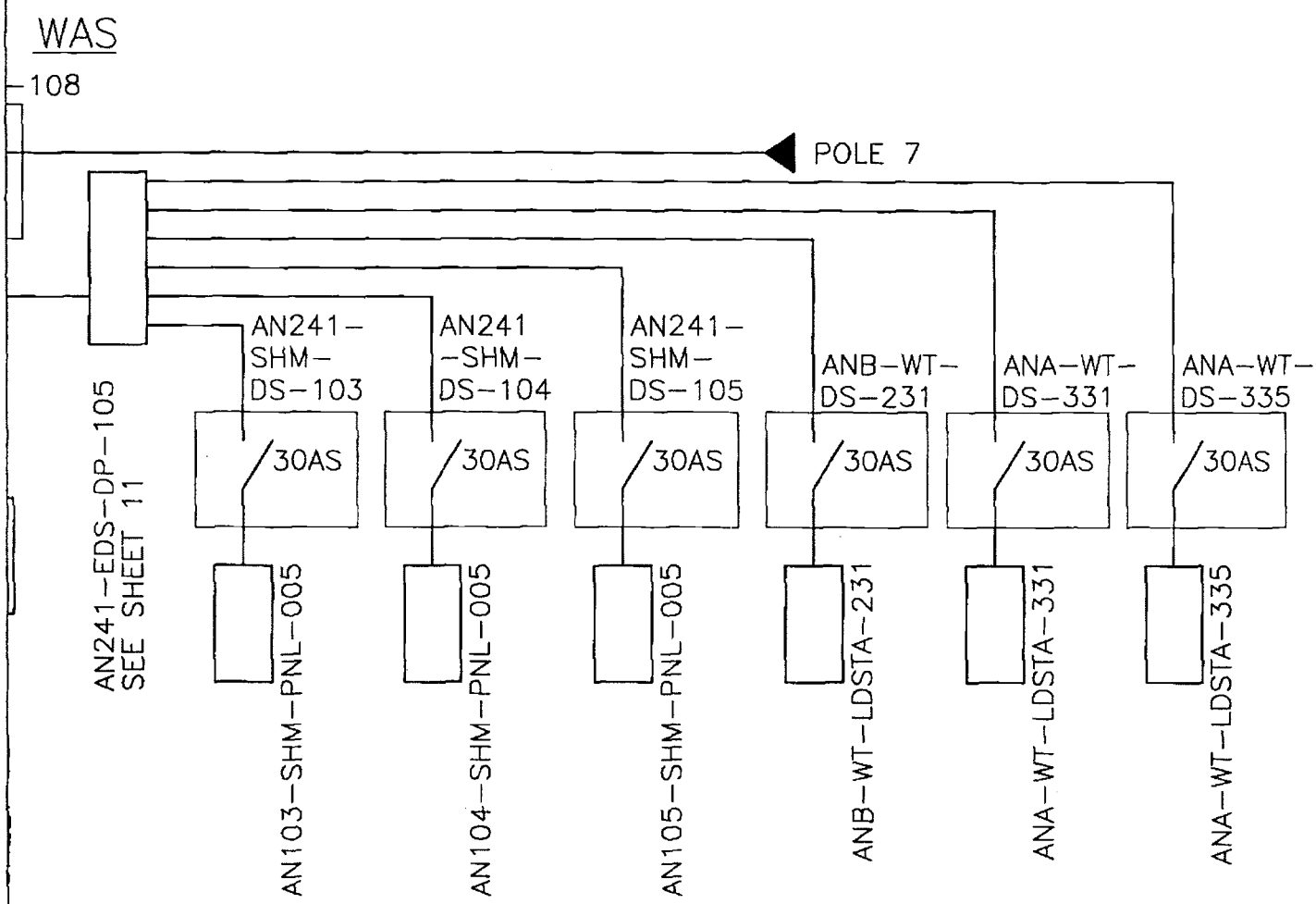

ZONE B-3

CH2M HILL ENGINEERING CHANGE NOTICE CONTINUATION SHEET	1a. ECN 725722 R 0
Page 4 of 15 DM☐ FM☒ TM☐	1b. Proj. ECN W- N/A- R

Document/Drawing No. H-14-030001 Sheet 1 Revision 24

(A seperate ECN Continuation page shall be used for each document/drawing to be modified.)

MODIFY AS SHOWN IN CLOUDED AREA.

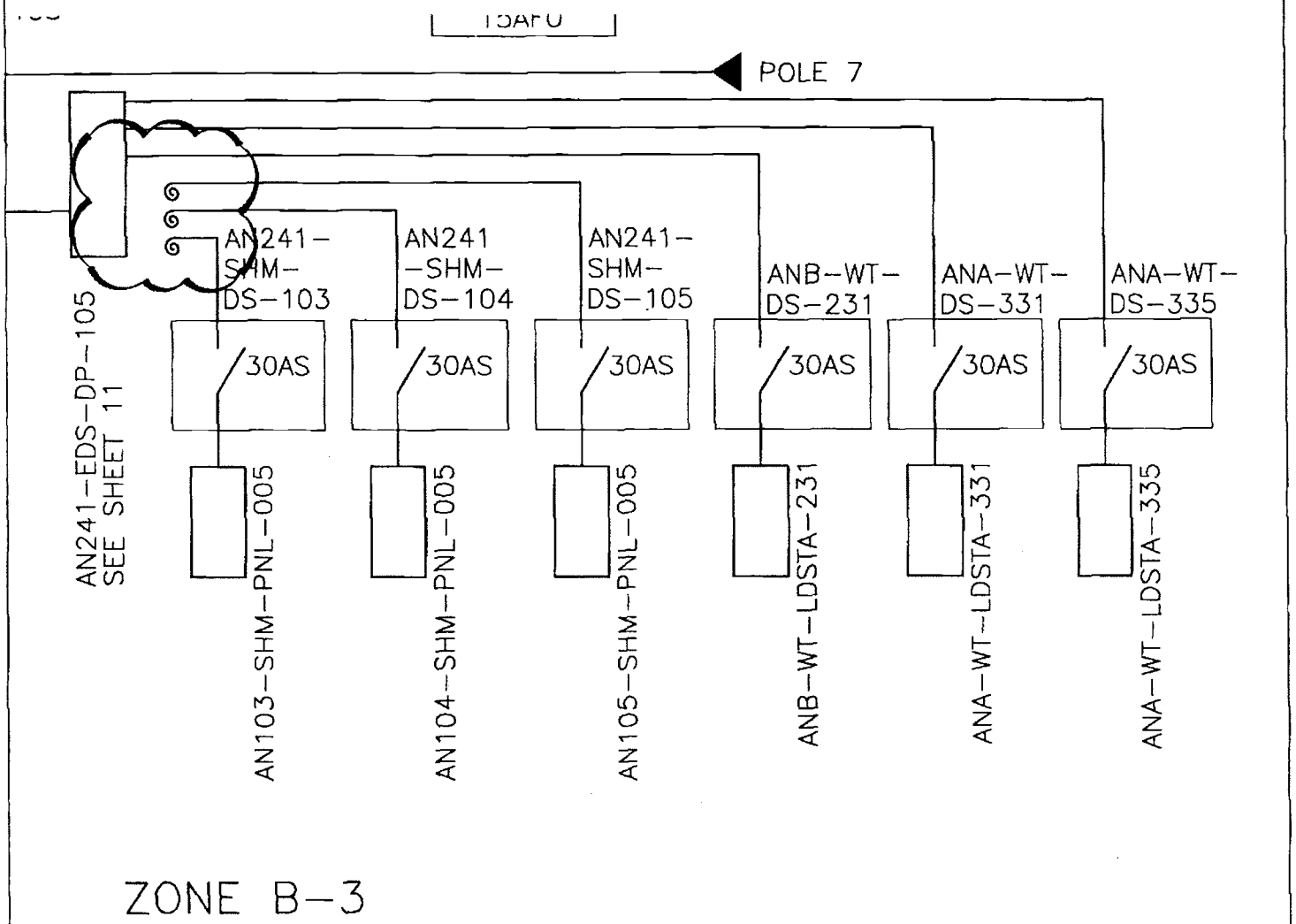

ZONE B-3

CH2M HILL ENGINEERING CHANGE NOTICE CONTINUATION SHEET	1a. ECN 725722 R 0
Page 5 of 15 DM☐ FM☒ TM☐	1b. Proj. ECN W- N/A- R

Document/Drawing No. H-2-71934 Sheet 2 Revision 17

(A seperate ECN Continuation page shall be used for each document/drawing to be modified.)

WAS

159	3/C	#10	5	AN241-EDS-DP-105	F
160	3/C	#10/#12	5/3	AN241-EDS-DP-105	F
161	2	#12	3	AN241-EDS-DP-105	N
162	3/C	#10	5	AN241-EDS-DP-105	F
163	3/C	#10	5	AN03A-WT-CP-107 RCPT	N
164	3/C	#10	5	AN03B-WT-CP-108 RCPT	N
165	3/C	#10	5	AN241-EDS-DP-105	F
166	3/C	#10	5	AN02A-WT-CP-104 RCPT	N
167	3/C	#10	5	AN02B-WT-CP-105 RCPT	N
168	3/C	#10	5	AN241-EDS-DP-105	F
169	3/C	#10	5	AN01A-WT-CP-101 RCPT	N
170	3/C	#10	5	AN01B-WT-CP-102 RCPT	N
171	3/C	#10	5	AN241-EDS-DP-105	F
172	3/C	#10	5	AN06A-WT-CP-116 RCPT	N
173	3/C	#10	5	AN06B-WT-CP-117 RCPT	N

CH2M HILL ENGINEERING CHANGE NOTICE CONTINUATION SHEET	1a. ECN 725722 R 0
Page 6 of 15 DM☐ FM☒ TM☐	1b. Proj. ECN W- N/A- R

Document/Drawing No. H-2-71934 Sheet 2 Revision 17

(A seperate ECN Continuation page shall be used for each document/drawing to be modified.)

MODIFY AS SHOWN IN CLOUDED AREA.

IS

159	3/C	#10	5	AN241-EDS-DP-105	P
160	3/C	#10/#12	5/3	AN241-EDS-DP-105	P
161	2	#12	3	~~AN241-EDS-DP-105~~	N
162	3/C	#10	5	AN241-EDS-DP-105 DISCONNECTED, SEE NOTE ??	P
163	3/C	#10	5	~~AN03A-WT-CP-107 RCPT~~	N
164	3/C	#10	5	~~AN03B-WT-CP-108 RCPT~~	N
165	3/C	#10	5	AN241-EDS-DP-105 DISCONNECTED, SEE NOTE ??	P
166	3/C	#10	5	~~AN02A-WT-CP-104 RCPT~~	N
167	3/C	#10	5	~~AN02B-WT-CP-105 RCPT~~	N
168	3/C	#10	5	AN241-EDS-DP-105 DISCONNECTED, SEE NOTE ??	P
169	3/C	#10	5	~~AN01A-WT-CP-101 RCPT~~	N
170	3/C	#10	5	AN01B-WT-CP-102 RCPT	N
171	3/C	#10	5	AN241-EDS-DP-105	P
172	3/C	#10	5	AN06A-WT-CP-116 RCPT	N
173	3/C	#10	5	AN06B-WT-CP-117 RCPT	N

ADD NOTE: (DRAFTER: USE NEXT NOTE NUMBER.)

??. WIRES WERE LIFTED AND ABANDONED IN PLACE IN PANEL. (IDENTIFY WIRES AS "SPARE")

CH2M HILL ENGINEERING CHANGE NOTICE CONTINUATION SHEET	1a. ECN 725722 R 0
Page 7 of 15 DM☐ FM☒ TM☐	1b. Proj. ECN W-N/A- R

Document/Drawing No. H-2-71934 Sheet 3 Revision 13

(A seperate ECN Continuation page shall be used for each document/drawing to be modified.)

WAS

WIRE RUN NO	NO. OF WIRE	SIZE OF WIRE	TYPE OF WIRE	FROM	
181	3/C	#10	5	AN241-EDS-DP-105	P45
182	3/C	#10	5	AN241-EDS-DP-105	P45
183	3/C	#10	5	AN241-EDS-DP-105	P45
184	3/C	#10	5	AN241-EDS-DP-105	P45
185	3/C	#10	5	AN241-EDS-DP-105	P45
186	3/C	#12	5	AN241-EDS-DP-105	P45
187	—	—	—	POLE NP17 TERM BOX	EXIS
188	28	#12	3	POLE #C8-L5-158-1-10 TERM. BOX	P11
189	3/C	#12	5	POLE #C8-L5-158-1-10 TERM. BOX	P114
190	2/C	#14	7	BLDG 241-AN-271 FIRE ALARM MASTER BOX	P5,
191	4	#8	4	FLOODLIGHT BANK #7	P12
192	3/C	#10	5	AN241-EDS-DP-105	P12
193	3/C	#10/#12	5/3	AN241-EDS-DP-105	P12
194	3/C	#10	5	AN241-EDS-DP-105	P12

CH2M HILL ENGINEERING CHANGE NOTICE CONTINUATION SHEET	1a. ECN 725722 R 0
Page 8 of 15 DM☐ FM☒ TM☐	1b. Proj. ECN W-N/A- R

Document/Drawing No. H-2-71934 Sheet 3 Revision 13

(A seperate ECN Continuation page shall be used for each document/drawing to be modified.)

MODIFY AS SHOWN IN CLOUDED AREA.

IS

WIRE RUN NO	NO. OF WIRE	SIZE OF WIRE	TYPE OF WIRE	FROM	
181	3/C	#10	5	AN241-EDS-DP-105 DISCONNECTED, SEE NOTE ??	P45
182	3/C	#10	5	AN241-EDS-DP-105 DISCONNECTED, SEE NOTE ??	P45
183	3/C	#10	5	AN241-EDS-DP-105 DISCONNECTED, SEE NOTE ??	P45
184	3/C	#10	5	AN241-EDS-DP-105 DISCONNECTED, SEE NOTE ??	P45
185	3/C	#10	5	AN241-EDS-DP-105 DISCONNECTED, SEE NOTE ??	P45
186	3/C	#12	5	AN241-EDS-DP-105 DISCONNECTED, SEE NOTE ??	P45
187	—	—	—	POLE NR17 TERM BOX	EXIS
188	28	#12	3	POLE #C8-L5-158-1-10 TERM. BOX	P11
189	3/C	#12	5	POLE #C8-L5-158-1-10 TERM. BOX	P114
190	2/C	#14	7	BLDG 241-AN-271 FIRE ALARM MASTER BOX	P5,
191	4	#8	4	FLOODLIGHT BANK #7	P12
192	3/C	#10	5	AN241-EDS-DP-105	P12
193	3/C	#10/#12	5/3	AN241-EDS-DP-105	P12
194	3/C	#10	5	AN241-EDS-DP-105	P12

ADD NOTE: (DRAFTER: USE NEXT NOTE NUMBER.)

??. WIRES WERE LIFTED AND ABANDONED IN PLACE IN PANEL. (IDENTIFY WIRES AS "SPARE")

CH2M HILL ENGINEERING CHANGE NOTICE CONTINUATION SHEET	1a. ECN 725722 R 0
Page 9 of 15 DM☐ FM☒ TM☐	1b. Proj. ECN W-N/A- R

Document/Drawing No. H-2-71934 Sheet 6 Revision 10

(A seperate ECN Continuation page shall be used for each document/drawing to be modified.)

WAS

WIRE RUN NO	NO. OF WIRE	SIZE OF WIRE	TYPE OF WIRE	FROM	
460	3/1	#10/#10	3	AN241-EDS-DP-105	P50
461	3/1	#6/#10	3	AN241-SHM-DS-103	P50
462	3/1	#10/#10	3	AN241-EDS-DP-105	P50
463	3/1	#6/#10	3	AN241-SHM-DS-104	NIPP
464	3/1	#10/#10	3	AN241-EDS-DP-105	P50
465	3/1	#6/#10	3	AN241-SHM-DS-105	P50
466				NEAR DISTR RACK	P50
467				HANDHOLE HH-AN-2	P50
468				HANDHOLE HH-AN-2	P50
469				HANDHOLE HH-AN-2	P50
520 (BY OTHERS)	12	#22	10	LAN BOX (NEAR POLE NP17)	LAN WW-
521 (BY OTHERS)	-	-	11	LAN BOX (NEAR POLE NP17)	LAN WW-
525	3/1	#6/#10	3	AN241-EDS-DP-105 (CKT #25)	P52
526	1	#10	9	SHMS-E, AN101-SHM-PNL-005	P52
527	2/1	#8/#10	3	SALW-EDS-DP-H101	P52
528	3/1	#6/#10	3	AN241-EDS-DP-105 (CKT# 40)	P52
529	1	#10	3/9	SHMS-B, AN107-SHM-PNL-005	P52

CH2M HILL ENGINEERING CHANGE NOTICE CONTINUATION SHEET	1a. ECN 725722 R 0
Page 10 of 15 DM☐ FM☒ TM☐	1b. Proj. ECN W-N/A- R

Document/Drawing No. H-2-71934 Sheet 6 Revision 10

(A seperate ECN Continuation page shall be used for each document/drawing to be modified.)

MODIFY AS SHOWN IN CLOUDED AREA.

IS

WIRE RUN NO	NO. OF WIRE	SIZE OF WIRE	TYPE OF WIRE	FROM	
460	3/1	#10/#10	3	AN241-EDS-DP-105 DISCONNECTED, SEE NOTE 1	P50
461	3/1	#6/#10	3	~~AN241-SHM-DS-103~~	P50
462	3/1	#10/#10	3	AN241-EDS-DP-105 DISCONNECTED, SEE NOTE 1	P50
463	3/1	#6/#10	3	~~AN241-SHM-DS-104~~	NIPF
464	3/1	#10/#10	3	AN241-EDS-DP-105 DISCONNECTED, SEE NOTE 1	P50
465	3/1	#6/#10	3	~~AN241-SHM-DS-105~~	P50
466				NEAR DISTR RACK	P50
467				HANDHOLE HH-AN-2	P50
468				HANDHOLE HH-AN-2	P50
469				HANDHOLE HH-AN-2	P50
520 (BY OTHERS)	12	#22	10	LAN BOX (NEAR POLE NP17)	LAN WW-
521 (BY OTHERS)	–	–	11	LAN BOX (NEAR POLE NP17)	LAN WW-
525	3/1	#6/#10	3	AN241-EDS-DP-105 (CKT #25) DISCONNECTED, SEE NOTE 1	P52
526	1	#10	9	~~SHMS-E, AN101-SHM-PNL-005~~	P52
527	2/1	#8/#10	3	~~SALW-EDS-DP-N101~~	P52
528	3/1	#6/#10	3	AN241-EDS-DP-105 (CKT #40) DISCONNECTED, SEE NOTE 1	P52
529	1	#10	3/9	~~SHMS-D, AN107-SHM-PNL-005~~	P52

ADD NOTE:

1. WIRES WERE LIFTED AND ABANDONED IN PLACE IN PANEL. (IDENTIFY WIRES AS "SPARE")

CH2M HILL ENGINEERING CHANGE NOTICE CONTINUATION SHEET	1a. ECN 725722 R 0
Page 11 of 15 DM☐ FM☒ TM☐	1b. Proj. ECN W- N/A- R

Document/Drawing No. H-2-71934 Sheet 7 Revision 2

(A seperate ECN Continuation page shall be used for each document/drawing to be modified.)

WAS

WIRE RUN NO. SEE NOTE 12	NO. OF WIRES OR CABLES	SIZE OF WIRE OR CABLE	TYPE OF WIRE OR CABLE	FROM	VIA	
1	2/1	#12	A	PWR PANEL EDS-DP-105	C1	L
7	4/2	#12	A	PWR PANEL EDS-DP-105	C7 *	J
8	2/1	#12	A	J-BOX #4	C8 *	L
9	2/1	#12	A	J-BOX #4	C9 *	L
10	2/1	#12	EXIST	BLDG 241-AN-271 PANEL BD "A"	C10 (EXST)*	V
11	1	#18	C	AN241-WT-TBX-101	C16	L
12	1	#18	A	WT-TBX-W314-20	NIPPLE , EXST LDSTA-151, NIPPLE *	L
13			EXIST	BLDG 241-AN-271 RELAY PANEL	C10 (EXST)*	V
14			EXIST	EXIST LK DETECTOR STN	C11 (EXST)*	L
15			EXIST	EXIST LK DETECTOR STN	C12 (EXST)*	L
16	2/1	#12	A	WT-TBX-W314-20	NIPPLE	B
17	1	#18	C	AN241-WT-TBX-101	C20, J-BOX #10, C17	L
19	1	#18	C	AN241-WT-TBX-101	C20, J-BOX #10, C19	L
20	1	#18	A	EXIST LDSTA-151	NIPPLE	L
21	1	#18	A	WT-TBX-6314-20	NIPPLE	L
22	1	#18	B	LK DET CAB (WT-LDSTA-335)	C22	V
25	1	#18	B	LK DET CAB (WT-LDSTA-331)	C25, WT-TBX-W314-05P	C
30	1	#18	D	AN241-WT-TBX-101	C30, WT-TBX-W314-07	C

CH2M HILL ENGINEERING CHANGE NOTICE CONTINUATION SHEET	1a. ECN 725722 R 0
Page 12 of 15 DM☐ FM☒ TM☐	1b. Proj. ECN W- N/A- R

Document/Drawing No. H-2-71934 Sheet 7 Revision 2

(A seperate ECN Continuation page shall be used for each document/drawing to be modified.)

MODIFY AS SHOWN IN CLOUDED AREA.

IS

WIRE RUN NO. SEE NOTE 12	NO. OF WIRES OR CABLES	SIZE OF WIRE OR CABLE	TYPE OF WIRE OR CABLE	FROM	VIA
1	2/1	#12	A	PWR PANEL EDS-DP-105 DISCONNECTED, SEE NOTE ??	C1
7	4/2	#12	A	PWR PANEL EDS-DP-105 DISCONNECTED, SEE NOTE ??	C7 *
8	2/1	#12	A	J-BOX #4	C8 *
9	2/1	#12	A	J-BOX #4	C9 *
10	2/1	#12	EXIST	BLDG 241-AN-271 PANEL BD "A"	C10 (EXST)*
11	1	#18	C	AN241-WT-TBX-101	C16
12	1	#18	A	WT-TBX-W314-20	NIPPLE , EXST LDSTA-151, NIPPLE *
13			EXIST	BLDG 241-AN-271 RELAY PANEL	C10 (EXST)*
14			EXIST	EXIST LK DETECTOR STN	C11 (EXST)*
15			EXIST	EXIST LK DETECTOR STN	C12 (EXST)*
16	2/1	#12	A	WT-TBX-W314-20	NIPPLE
17	1	#18	C	AN241-WT-TBX-101	C20, J-BOX #10, C17
19	1	#18	C	AN241-WT-TBX-101	C20, J-BOX #10, C19
20	1	#18	A	EXIST LDSTA-151	NIPPLE
21	1	#18	A	WT-TBX-6314-20	NIPPLE
22	1	#18	B	LK DET CAB (WT-LDSTA-335)	C22
25	1	#18	B	LK DET CAB (WT-LDSTA-331)	C25, WT-TBX-W314-05P
30	1	#18	D	AN241-WT-TBX-101	C30, WT-TBX-W314-07

ADD NOTE: (DRAFTER: USE NEXT NOTE NUMBER.)

??. WIRES WERE LIFTED AND ABANDONED IN PLACE IN PANEL. (IDENTIFY WIRES AS "SPARE")

CH2M HILL ENGINEERING CHANGE NOTICE CONTINUATION SHEET	1a. ECN 725722 R 0
Page 13 of 15 DM☐ FM☒ TM☐	1b. Proj. ECN W- N/A R

Document/Drawing No. H-2-73840 Sheet 1 Revision 4

(A seperate ECN Continuation page shall be used for each document/drawing to be modified.)

WAS

WIRE RUN NO.	NO. OF WIRES	SIZE OF WIRE	TYPE OF WIRE	FROM	
1					
2	1-3/C	12	3	EXST PWR DIST STA, PNLBD C	P1,
3					
4	1-3/C	12	3	LEAK DET STA RECEIVER PIT 01E	P3,
5					
6	1-4/C	12	3	EXST PWR DIST STA, PNLBD B	P2,
7	1-4/C	12	3	EXST PWR DIST STA, PNLBD C	P1,
8					
9	1-8/C	12	3	EXST RELAY CABINET, 241-AN-271 BLDG	ACR
10					
11	1-6/C	12	3	EXST RELAY CABINET, 241-AN-271 BLDG	ACR

MODIFY AS SHOWN IN CLOUDED AREA.

IS

WIRE RUN NO	NO. OF WIRE	SIZE OF WIRE	TYPE OF WIRE	FROM	
1					
2	1-3/C	#12	3	EXST PWR DIST STA, PNLBD C	P1, DB, P3
3					
4	1-3/C	#12	3	LEAK DET STA RECEIVER PIT 01E	PE, DB, P4
5					
6	1-4/C	#12	3	~~EXST PWR DIST STA, PNLBD B~~	P2, DB, P6
7	1-4/C	#12	3	EXST PWR DIST STA, PNLBD C WIRES DISCONNECTED & ABANDON IN PLACE	P1, DB, P6
8					
9	1-8/C	#12	3	EXST RELAY CABINET, 241-AN-271 BLDG	ACRW, DB,
10					
11	1-6/C	#12	3	EXST RELAY CABINET, 241-AN-271 BLDG	ACRW (EXST
12					
13	1-6/C	#12	3	EXST RELAY CABINET, 241-AN-271 BLDG	ACRW (EXST

CH2M HILL ENGINEERING CHANGE NOTICE
CONTINUATION SHEET

DM ☐ FM ☒ TM ☐

1a. ECN 725722 R 0

1b. Proj. ECN W- N/A- R

Document/Drawing No. H-14-030001 Sheet 11 Revision 9

(A seperate ECN Continuation page shall be used for each document/drawing to be modified.)

WAS

PANEL MFG: CUTLER-HAMMER
PANEL TYPE (MODEL): CHB
MAIN BRKR TYPE: CUTLER-HAMMER, CC2200

PANELBOARD: AN241-EDS-DP-105 LOCATION: POWER DISTR STATION
FED FROM: AN241-EDS-DP-103, BKR 32

VOLTAGE: 120/240VAC, 1PH, 3W
ONE LINE DWG NO: H-14-030001 SH 1

NEMA TYPE: 3
■ SURFACE MOUNT
☐ FLUSH MOUNT

■ MAIN BREAKER
☐ LUGS ONLY
☐ TOP ■ BOTTOM FEED

225 AMP BUS
225 AMP NEUT
■ GROUND BUS

☐ PANELBOARD GROUND FAULT PROTECTION
☐ OTHER

FEEDER BRKR TYPE: CUTLER-HAMMER, EHC 2090
MAIN BRKR RATING (AIC): 10,000
FEEDER BRKR RATING (AIC): 14,000

REMARKS	SCHEME NUMBER	WATTS/HP PH A	WATTS/HP PH B	LOAD DESCRIPTION	SYS NO.	CKT NO.	A	B	CKT NO.	SYS NO.	LOAD DESCRIPTION	WATTS/HP PH A	WATTS/HP PH B	SCHEME NUMBER	REMARKS
							200								
		460		INSTR ENCLOSURE 241-AN-901 (WSTA-CAM-102 & 103)		1	20	30	2		STANDARD HYDROGEN MONITOR ENCL	2000			SEE SHEET 1 FOR DISC
			460	INSTR ENCLOSURE 241-AN-902 (WSTA-CAM-101 & 104)		3	20				AN103-SHM-PNL-005		2000		FED FROM THIS BKR
		460		INSTR ENCLOSURE 241-AN-903 (WSTA-CAM-105 & 106)		5	20	20	6		INSTR ENCLOSURE 241-AN-904 (WSTA-CAM-107)	460			
			680	XMTR ENCL AN01C-WSTA-ENCL-001		7	20	20	8		XMTR ENCL AN02C-WSTA-ENCL-002		680		
		680		XMTR ENCL AN03C-WSTA-ENCL-003		9	20	20	10		XMTR ENCL AN04C-WSTA-ENCL-004	680			
			680	XMTR ENCL AN05C-WSTA-ENCL-005		11	20	20	12		XMTR ENCL AN06C-WSTA-ENCL-006		680		
		75		AN101 THRU AN103-WST-LIT-104		13	20	20	14		AN104 THRU AN107-WST-LIT-104	100			
			680	XMTR ENCL AN07C-WSTA-ENCL-007		15	20	20	16		POWER DISTR STATION RCPT		180		GFCI
PIT 01E JUMPER HEAT TRACE CIRCUIT DISCONNECTED		1620		TK-101-103 PUMP CONT STA RCPT		17	20	20	18		TK 104-106 PUMP CONT STA RCPT (9)	1620			AN01D-WT-LDSTA-125 & AN01E-WT-LDSTA-126 HEAT TRACE ALARM CIRCUIT DISCONNECTED
DISCONNECTED - CABINET LOCATED OUTSIDE FENCE OF AX FARM			300	2"SN-247 HT TRACE CONT ENCL HTR		19	20	20	20		PIT 01D AND 01E LEAK DETECTORS AND HEAT TRACE ALARM		350		
		800		RAW WATER FLUSH PIT ANFP-RW-PIT-102 HEATER CONTROL STATION		21	20	30	22		STANDARD HYDROGEN MONITOR ENCL	2000			SEE SHEET 1 FOR DISC
			800	241-AN STEAM TRAP PIT HEATER		23	20				AN104-SHM-PNL-005		2000		SW FED FROM THIS BKR
SEE PROJECT ECN W-369-59		2556		STANDARD HYDROGEN MONITOR ENCL		25	35	30	26		STANDARD HYDROGEN MONITOR ENCL	2000			SEE SHEET 1 FOR DISC
			2556	AN101-SHM-PNL-005			20	20			AN105-SHM-PNL-005		2000		SW FED FROM THIS BKR
				SPARE		29	20	20	30		SPARE				
DISCONNECTED - SAVE FOR POSSIBLE FUTURE RECONNECTION	C31		1200	HEAT TRACE CONTROL PANEL HEATER 2"SL-168 AND 3"SN-268		31	20	20	32		TK 107 PUMP CONT STATION RCPT (3)		540		
DISCONNECTED - SAVE FOR POSSIBLE FUTURE RECONNECTION		500		HEAT TRACE CONTROL CIRCUIT		33	20	20	34		HEAT TRACE CONTROL CIRCUIT	500			DISCONNECTED - SAVE FOR POSSIBLE FUTURE RECONNECTION
DISCONNECTED - SAVE FOR POSSIBLE FUTURE RECONNECTION		1200	1200	HEAT TRACE 2"SL-162 AND 2"SL-163, 2"SL-165 AND 2"SL-166		35	20	20	36		HEAT TRACE 3"SN-262 AND 263	943	943		DISCONNECTED - SAVE FOR POSSIBLE FUTURE RECONNECTION
DISCONNECTED - SAVE FOR POSSIBLE FUTURE RECONNECTION	C39	862	862	HEAT TRACE 3"SN-265 AND 3"SN-266		39	20	30	40		STANDARD HYDROGEN MONITOR ENCL AN107-SHM-PNL-005	2000	2000		
	SUBTOTAL	9213	9418								SUBTOTAL	12,303	11,373		

TOTAL WATTS PHASE A: 21,516
TOTAL WATTS PHASE B: 20,791
TOTAL: 42,307

NOTE:
FOR CIRCUIT 30, SAFETY CLASS QUALIFIED CIRCUIT BREAKER INSTALLED.

CH2M HILL ENGINEERING CHANGE NOTICE
CONTINUATION SHEET

DM☐ FM☒ TM☐

1a. ECN 725722 R 0

1b. Proj. ECN W-N/A- R

Document/Drawing No. H-14-030001 Sheet 11 Revision 9

(A seperate ECN Continuation page shall be used for each document/drawing to be modified.)

MODIFY AS SHOWN

IS

PANEL MFG: CUTLER-HAMMER
PANEL TYPE (MODEL): CHB
MAIN BRKR TYPE: CUTLER-HAMMER, CC2200

PANELBOARD: AN241-EDS-DP-105 LOCATION: POWER DISTR STATION
FED FROM: AN241-EDS-DP-103, BKR 32

VOLTAGE: 120/240VAC, 1PH, 3W
ONE LINE DWG NO: H-14-030001 SH 1

NEMA TYPE: 3
■ SURFACE MOUNT
☐ FLUSH MOUNT

■ MAIN BREAKER
☐ LUGS ONLY
☐ TOP ■ BOTTOM FEED

225 AMP BUS
225 AMP NEUT
■ GROUND BUS

☐ PANELBOARD GROUND FAULT PROTECTION
☐ OTHER

FEEDER BRKR TYPE: CUTLER-HAMMER, EHC 2090
MAIN BRKR RATING (AIC): 10,000
FEEDER BRKR RATING (AIC): 14,000

REMARKS	SCHEME NUMBER	WATTS/HP PH A	WATTS/HP PH B	LOAD DESCRIPTION	SYS NO.	CKT NO.	A	B	CKT NO.	SYS NO.	LOAD DESCRIPTION	WATTS/HP PH A	WATTS/HP PH B	SCHEME NUMBER	REMARKS
		460		INSTR ENCLOSURE 241-AN-901 (WSTA-CAM-102 & 103)		1	20	30	2		SPARE				SEE SHEET 1 FOR DISC
			460	INSTR ENCLOSURE 241-AN-902 (WSTA-CAM-101 & 104)		3	20	20							FED FROM THIS BKR
		460		INSTR ENCLOSURE 241-AN-903 (WSTA-CAM-105 & 106)		5	20	20	6		INSTR ENCLOSURE 241-AN-904 (WSTA-CAM-107)	460			
			680	XMTR ENCL AN01C-WSTA-ENCL-001		7	20	20	8		XMTR ENCL AN02C-WSTA-ENCL-002		680		
		680		XMTR ENCL AN03C-WSTA-ENCL-003		9	20	20	10		XMTR ENCL AN04C-WSTA-ENCL-004	680			
			680	XMTR ENCL AN05C-WSTA-ENCL-005		11	20	20	12		XMTR ENCL AN06C-WSTA-ENCL-006		680		
		75		AN101 THRU AN103-WST-LIT-104		13	20	20	14		AN104 THRU AN107-WST-LIT-104	100			
			680	XMTR ENCL AN07C-WSTA-ENCL-007		15	20	20	16		POWER DISTR STATION RCPT		180		GFCI
				SPARE		17	20	20	18		TK 104-108 PUMP CONT PBX RCPT (9)	1620			
				SPARE		19	20	20	20		PIT 01D AND 01E LEAK DETECTORS		360		AN01D-WT-LDSTA-125 & AN01E-WT-LDSTA-126
		800		RAW WATER FLUSH PIT AREA PW-PR-102 HEATER CONTROL STATION		21	20	30	22		SPARE				
			800	241-AN-STEAM TRAP PIT HEATER		23	20								
				SPARE		25	35	30	26		SPARE				
				SPARE		29	20	20	30		SPARE				
				SPARE		31	20	20	32		TK 104-108 PUMP CONT STATION RCPT (3)		540		
				SPARE		33	20	20	34		SPARE				
				SPARE		35	20	20	36		SPARE				
				SPARE		39	20	30	40		SPARE				
	SUBTOTAL	2475	3300								SUBTOTAL	2860	2430		

TOTAL WATTS PHASE A: 5335
TOTAL WATTS PHASE B: 5730
TOTAL: 11,065

NOTE:
FOR CIRCUIT 30, SAFETY CLASS QUALIFIED CIRCUIT BREAKER INSTALLED.

Task# WRPS-PER-2008-0167.2

E-STARS[R] Report
Task Detail Report
07/08/2009 0851

TASK INFORMATION			
Task#	WRPS-PER-2008-0167.2		
Subject	WRPS-PER-2008-0167; RES; Perform work package WFO-WO-07-3103. Deliverable: Copy of work record.		
Parent Task#	WRPS-PER-2008-0167	**Status**	Open
Reference	WRPS-PER-2008-0167	**Due**	07/15/2009
Originator	^PER CAs	**Priority**	Medium
Originator Phone		**Category**	PER
Origination Date	12/30/2008 0929	**Generic1**	None
Remote Task#		**Generic2**	None
Deliverable	PER Review	**Generic3**	None
Class	None	**View Permissions**	Global
Instructions	*No Instructions*		

ROUTING LISTS

1	Corrective Action	Active
	Perform work package WFO-WO-07-3103. Deliverable: Copy of work record. Reference: Issue 8.3.4 AN Farm RESPONSIBLE MANAGER: When this corrective action is complete, enter a closure statement in E-STARS and close the E-STARS subtask. Refer to the Problem Evaluation Request procedure TFC-ESHQ-Q-C-C-01, Section 4.4 for closure documentation requirements	
	• Brooks, Rocky L - Assign - Completed with comments - 06/30/2009 1510 *Instructions:*	
	• Knight, Mark A - Review - Awaiting Response - Due Date - 07/12/2009 0000 *Instructions:*	

ATTACHMENTS

Attachments	1. DNFSB Electrical Letter Attachment.pdf 2. DNFSB Electrical Letter.pdf 3. Link to PER 4. RE_ WRPS-PER-2008-0167 _RES_.msg 5. Request to Extend WRPS-PER-2008-0167_2__4__7__22__31 _RES_.msg 6. Request to Extend WRPS-PER-2009-0167_2__4__7.msg 7. WRPS-PER-2008-0167 EVENT & CAUSAL FACTORING CHART.pdf 8. WRPS-PER-2008-0167.2 Work Record for WFO-WO-07-3103.pdf

COMMENTS

Poster	^PER Coordinator (Owen, Annette) - 04/24/2009 0706
	Due Date Extension
	Extend CA 2 to 5/25/09 per e-mail request. Work has begun in AN Farm but has been delayed in part due to issues with the electrical outage and farm ventilation system, and the need to support waste retrieval (C-104 to AN-101). Additional time is therefore required to complete these tasks. David Bragg
Poster	^PER Coordinator (Owen, Annette) - 05/28/2009 1556

Task# WRPS-PER-2008-0167.2

	Due Date Extension
	Extend WRPS-PER-2008-0167.2 - Please assign a new due date of July 8, 2009. Work has been completed, however additional time is required to finish review and to complete/process paperwork. D Bragg
Poster	Brooks, Rocky L (Judkins, Heather K) - 06/30/2009 1510
	Corrective Action #2 Complete
	Work package WFO-WO-07-3103 has been completed and a copy of the work record has been attached to the ESTARS task.
Poster	Brooks, Rocky L (Judkins, Heather K) - 06/30/2009 1510
	Completed
	Work package WFO-WO-07-3103 has been completed and a copy of the work record has been attached to the ESTARS task.

TASK DUE DATE HISTORY

Modified	05/28/2009 1556 - ^PER Coordinator	**New Due Date**	07/08/2009 0000
Modified	04/24/2009 0707 - ^PER Coordinator	**New Due Date**	05/25/2009 0000
Modified	12/30/2008 0929 - ^PER CAs	**New Due Date**	03/31/2009 0000
Modified	12/30/2008 0929 - ^PER CAs	**New Due Date**	10/03/2009 0000

SUB TASK HISTORY

No Subtasks

-- end of report --

RPP WORK RECORD	1. Document Number: WFO-WO-07-3103

2. Work Item Title: 241-AN Replace Panelboard AN241-EDS-DP-105

Date	Turnover, Problem Description, Action Taken	Feed Back (X)	Name	Craft/ Resource Type	Hours
12-9-08	Lock + Tag for this work will be				
	TAF - "241-AN-08-013" to be				
	installed 12/10/08 Dayshift.		[illegible]	OE	-
3/17/09	Ref. LOTO 241-AN-09-018		[illegible]	OE	
3/27/09	STARTED Labeling WIRE		Bradly/Cobb		
3/30/09	Determing ALL WIRES AND				
	LABELING to Breakers		[illegible]		
4/15/09	OK TO REMOVE L&T AFTER		B. Wright	FWS	
	NEW L&T IS INSTALLED				
	DOWNSTREAM OF POLE.				
4/23/09	FIELD WORK IS Complete FOR		B Wright	FWS	
	THIS PACKAGE. L&T READY				
	TO BE REMOVED.				

Summary by Craft/Resource Type

Craft/Resource Type	Total Hours	Craft/Resource Type	Total Hours

A-6003-243 (11/04)

Message

From: Bragg, David A

Sent: Thursday, May 28, 2009 3:52 PM

To: ^WRPS Corrective Action Group

Cc: Knight, Mark A; Brooks, Rocky L; Owen, Annette

Subject: Request to Extend WRPS-PER-2008-0167.2/.4/.7/.22/.31 (RES)

Per direction of Mark Knight, please extend the following corrective actions:

WRPS-PER-2008-0167.2 - Please assign a new due date of July 8, 2009. Work has been completed, however additional time is required to finish review and to complete/process paperwork

WRPS-PER-2008-0167.4 - Please assign a new due date of July 8, 2009. Work has been completed, however additional time is required to finish review and to complete/process paperwork

WRPS-PER-2008-0167.7 - Please assign a new due date of July 8, 2009. Work has been completed, however additional time is required to finish review and to complete/process paperwork

WRPS-PER-2008-0167.22 - Please assign a new due date of August 18, 2009. Material (breakers) has been procured but not yet received. Additional time is required for material delivery and to perform fieldwork.

WRPS-PER-2008-0167.31 - Please assign a new due date of August 5, 2009. Work is dependant upon SY Farm outage schedule.

Thank you,

David Bragg
Base Operations Maintenance Engineering

Message

From: Bragg, David A

Sent: Thursday, April 23, 2009 11:43 AM

To: ^WRPS Corrective Action Group

Cc: Roberts, Mark A; Brooks, Rocky L

Subject: Request to Extend WRPS-PER-2009-0167.2/.4/.7

Per direction of Mark Roberts, acting for Mark Knight, please extend the following corrective actions;

WRPS-PER-2008-0167.2 to 05/25/09

WRPS-PER-2008-0167.4 to 05/25/09

WRPS-PER-2008-0167.7 to 05/25/09

Work has begun in AN Farm but has been delayed in part due to issues with the electrical outage and farm ventilation system, and the need to support waste retrieval (C-104 to AN-101). Additional time is therefore required to complete these tasks.

Thank you,

David Bragg
Base Operations Maintenance Engineering

Task# WRPS-PER-2008-0167.3

E-STARS[R] Report
Task Detail Report
07/08/2009 0853

TASK INFORMATION			
Task#	WRPS-PER-2008-0167.3		
Subject	WRPS-PER-2008-0167; RES; Ensure ECN in support of Work Package TFC-WO-08-0276 (to install fused disconnect) is released. Deliverable: Electronic c		
Parent Task#	WRPS-PER-2008-0167	**Status**	CLOSED 01/20/2009
Reference	WRPS-PER-2008-0167	**Due**	01/28/2009
Originator	^PER CAs	**Priority**	Medium
Originator Phone		**Category**	PER
Origination Date	12/30/2008 0929	**Generic1**	None
Remote Task#		**Generic2**	None
Deliverable	PER Review	**Generic3**	None
Class	None	**View Permissions**	Global
Instructions	*No Instructions*		

ROUTING LISTS

1	Corrective Action	Inactive
	Ensure ECN in support of Work Package TFC-WO-08-0276 (to install fused disconnect) is released. Deliverable: Electronic copy of released ECN. Reference: Issue 8.4.4 AN Farm RESPONSIBLE MANAGER: When this corrective action is complete, enter a closure statement in E-STARS and close the E-STARS subtask. Refer to the Problem Evaluation Request procedure TFC-ESHQ-Q-C-C-01, Section 4.4 for closure documentation requirements	
	• Nelson, Rick E - Assign - Completed with comments - 01/20/2009 0844 *Instructions:*	
	• Knight, Mark A - Review - Concur with comments - 01/20/2009 0845 *Instructions:*	

ATTACHMENTS

Attachments	1. DNFSB Electrical Letter Attachment.pdf 2. DNFSB Electrical Letter.pdf 3. Link to PER 4. RE_ WRPS-PER-2008-0167 _RES_.msg 5. WRPS-PER-2008-0167 EVENT & CAUSAL FACTORING CHART.pdf 6. WRPS-PER-2008-0167.3 CLOSURE ECN-725990-R0.pdf

COMMENTS

Poster	Nelson, Rick E (Bragg, David A) - 01/20/2009 0844
	Completed
	ECN-725990-R0 was released in support of work pkg TFC-WO-08-0276. See attachment for objective evidence. The PER originator declined involvement in the PER disposition.
Poster	Knight, Mark A (Bragg, David A) - 01/20/2009 0845
	Concur
	The required ECN has been released and is attached as objective evidence. The PER originator

Task# WRPS-PER-2008-0167.3

	declined involvement with the disposition of this corrective action.		
Poster	^PER CAs (Owen, Annette) - 01/20/2009 0952		
	CLOSED		
	Closure statement and attached documentation are adequate to close this action.		
TASK DUE DATE HISTORY			
Modified	12/30/2008 0929 - ^PER CAs	**New Due Date**	01/28/2009 0000
Modified	12/30/2008 0929 - ^PER CAs	**New Due Date**	10/03/2009 0000
SUB TASK HISTORY			
No Subtasks			

-- end of report --

S

CH2M HILL ENGINEERING CHANGE NOTICE

☐ DM ☒ FM ☐ TM

1a. ECN 725990 R 0

1b. Proj. ECN N/A - - R

2. Simple Modification	3. Design Inputs – For full ECNs, record information on the ECN-1 Form (not required for Simple Modifications)		4. Date
☒ Yes ☐ No			11/4/08
5. Originator's Name, Organization, MSIN, & Phone No.	**6. PrHA Number**	**7. USQ Number**	**8. Related ECNs**
Kenneth Ewer, BO Maint. Eng, S5-07, 373-5090	No. PrHA-00572 R-0 ☐ N/A	No. TF-08-1852-D R-0 ☐ N/A	N/A
9. Title	**10. Bldg. / Facility No.**	**11. Equipment / Component ID**	**12. Approval Designator**
Replace Disconnect Switch with Fused DS, AN273-EDS-DS-112	241AN	AN273-EDS-DS-112	N/A
13. Engineering Documents/Drawings to be Changed (Incl. Sheet & Rev. Nos.)		**14. Safety Designation**	**15. Expedited/Off-Shift ECN?**
See Block 18		☐ SC ☐ SS ☒ GS ☐ N/A	☐ Yes ☒ No
16a. Work Package Number	**16b. Modification Work Completed**	**16c. Restored to Original Status (TM)**	**17. Fabrication Support ECN?**
TFC-WO-08-0276	Responsible Engineer / Date	N/A Responsible Engineer / Date	☐ Yes ☒ No

18. Description of the Change (Use ECN Continuation pages as needed)

Engineering Documents/Drawings to be Changed:

H-14-030001, sh 2, rev 13 H-14-030301, sh 1, rev ~~1~~ 2 BW 11/19/08 H-2-93194, sh 1, rev 1

GENERAL DESCRIPTION:

The main disconnect switch (DS) AN273-EDS-DS-112 for the AN tank farm compressor building is non-fused. Its normal short circuit rating is 10kA, but the calculated available short circuit current at DS location is greater than the equipment rating at approx 15.6kA.

SOLUTION:

Replace the non-fused disconnect switch with a 100A fused disconnect switch that has adequate short circuit rating.

ANALYSIS: RPP-RPT-38265, Tank Farm Electrical Distribution Studies, has identifed that the disconnect switch is rated below the available short circuit current (by analysis). The report recommends changing the DS to a fusible DS with 90A fuses. Type J fuses are specified, which are capable of withstanding 200kAIC, thus protecting the DS. AN farm load calculation (RPP-CALC-24467) will be updated at next review cycle.

19. Justification of the Change (Use ECN Continuation pages as needed)

Engineering Rework ☐ Yes ☒ No

Training Impact ☐ Yes ☒ No

This change is directed by NEC requirement that installed equipment be rated for fault current. Also, RPP-RPT-38265, Tank Farm Electrical Distribution Studies and previous tank farm electrical distribution system studies have concluded that the equipment was not sufficiently rated and needs to be upgraded.

This change will resolve recommendation 8.4.4 of RPP-CALC-24467.

20. ECN Category

☐ Direct Revision
☒ Supplemental
☐ Void/Cancel

ECN Type

☐ Supersedure
☐ Revision

21. Distribution

Name	MSIN	Name	MSIN
MA Roberts	S5-07		
MG Al-Wazani	S5-27		
RE Nelson	S5-07		
RL Brooks	S5-03		
JW Kissel	S5-07		
ER HAMM	R2-58		

Release Stamp

NOV 17 2008

DATE: STA: ID 18

CH2M HILL ENGINEERING CHANGE NOTICE	1a. ECN 725990 R 0
Page 2 of 6 ☐ DM ☒ FM ☐ TM	1b. Proj. ECN N/A - - R

22. Revisions Planned (Include a brief description of the contents of each revision)

N/A

Note: All revisions shall have the approvals of the affected organizations as identified in block 12 "Approval Designator," on page 1 of this ECN.

23. Commercial Grade Item Dedication Numbers (associated with this design change)

N/A

24. Engineering Data Transmittal Numbers (associated with this design change, e.g., new drawings, new documents)

N/A

25. Other Non Engineering (not in HDCS) documents that need to be modified due to this change

Type of Document	Document Number	Update Completed On	Responsible Engineer (print/sign and date)
Alarm Response Procedure	N/A		
Operations Procedure	N/A		
Maintenance Procedure	N/A		

26. Field Change Notice(s) Used?

☐ **Yes** ☒ **No**

If Yes, Record Information on the ECN-2 Form, attach form(s), include a description of the interim resolution on ECN Page 1, block 18, and identify permanent changes.

NOTE: ECNs are required to record and approve all FCNs issued. If the FCNs have not changed the original design media then they are just incorporated into the design media via an ECN. If the FCN did change the original design media then the ECN will include the necessary engineering changes to the original design media.

27. Design Verification Required?

☐ **Yes** ☒ **No**

If Yes, as a minimum attach the one page checklist from TFC-ENG-DESIGN-P-17.

28. Approvals

Facility/Project Signatures		Date	A/E Signatures		Date
Resp. Engineer	KL Ewer Kenneth L. Ewer	11/6/08	Originator/Design Agent		
Resp. Manager	MA Roberts Mark Roberts	11/13/08	Professional Engineer		
Quality Assurance			Project Engineer		
IS&H Engineer			Quality Assurance		
NS&L Engineer			Safety		
Environ. Engineer			Designer		
Engineering Checker	RE Nelson Richard Nelson	11/10/08	Environ. Engineer		
Other			Other		
Other			Other		
Other			DEPARTMENT OF ENERGY / OFFICE OF RIVER PROTECTION		
Other			Signature or a Control Number that tracks the Approval Signature		
Other					
Other			ADDITIONAL SIGNATURES		
Other					
Other					

Document/Drawing No. H-14-030001, Sheet 2 Revision 13

WAS:

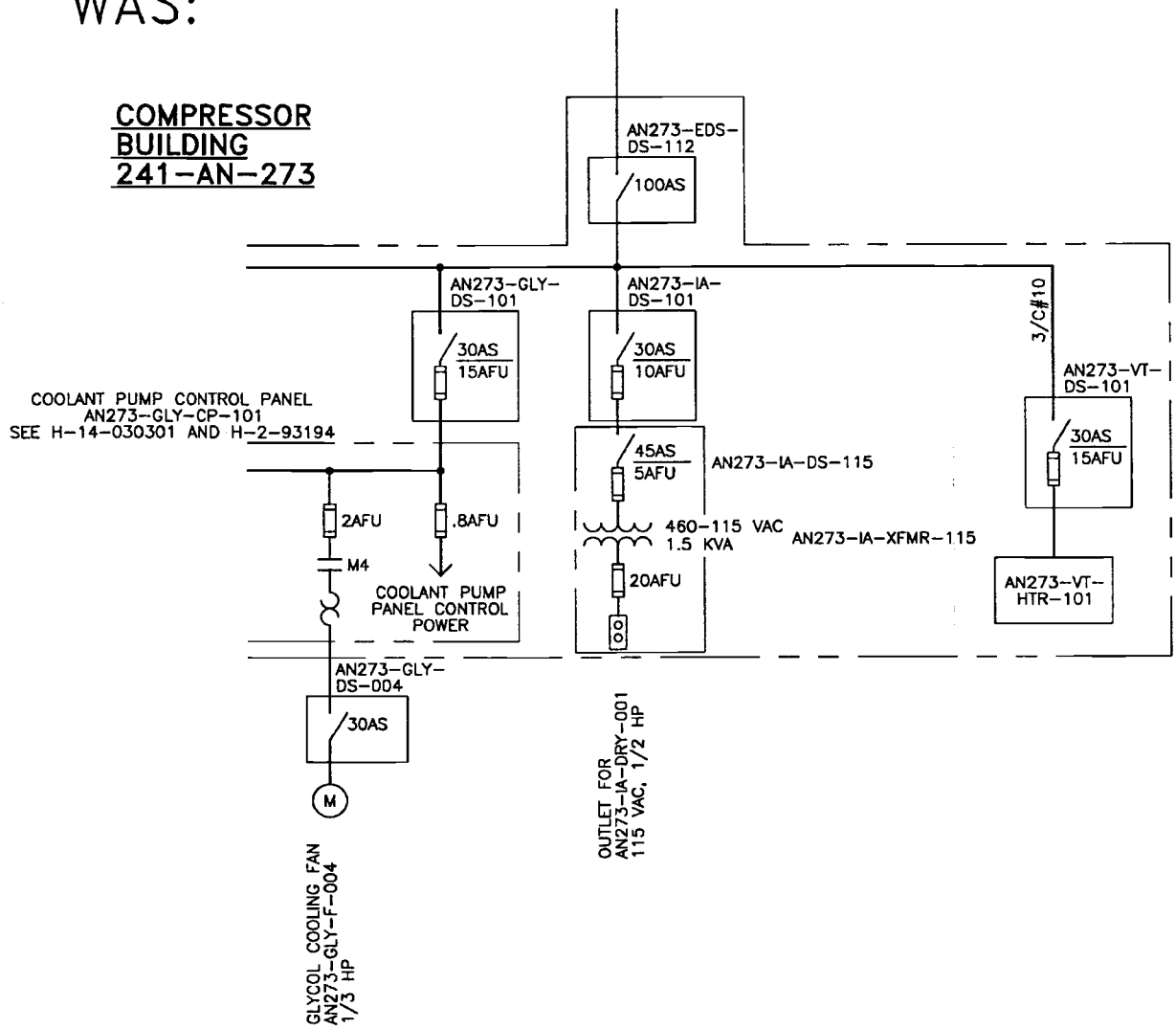

☐ DM ☒ FM ☐ TM	1a. ECN 725990 R0 1b. Proj. ECN N/A

Document/Drawing No. H-14-030001, Sheet 2 Revision 13

IS:

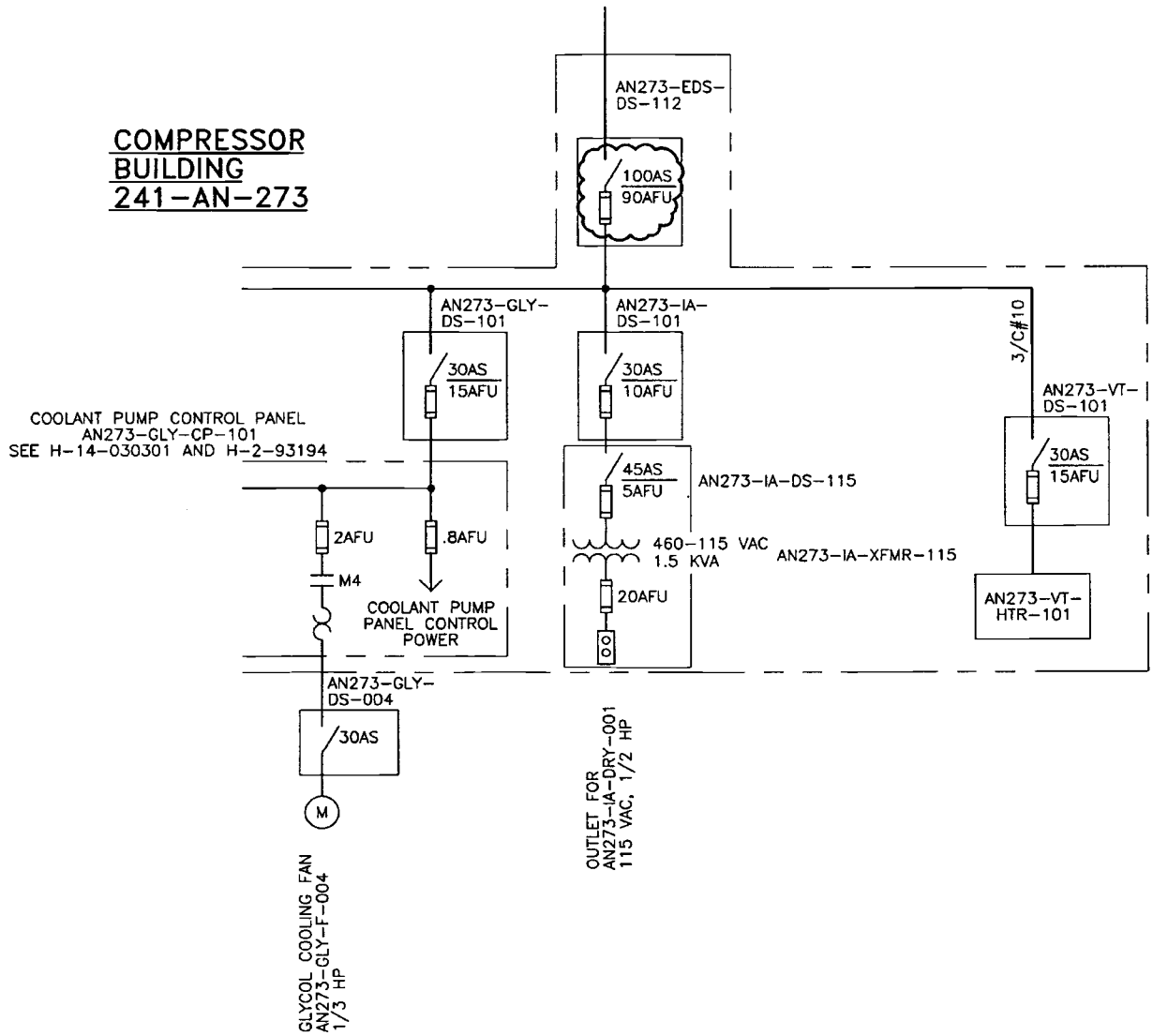

ENGINEERING CHANGE NOTICE CONTINUATION SHEET Page 5 of 6	☐ DM ☒ FM ☐ TM	1a. ECN 725990 R0 1b. Proj. ECN N/A

Document/Drawing No. H-14-030301, Sheet 1 Revision ~~1~~ 2
3w 11/17/08

WAS:

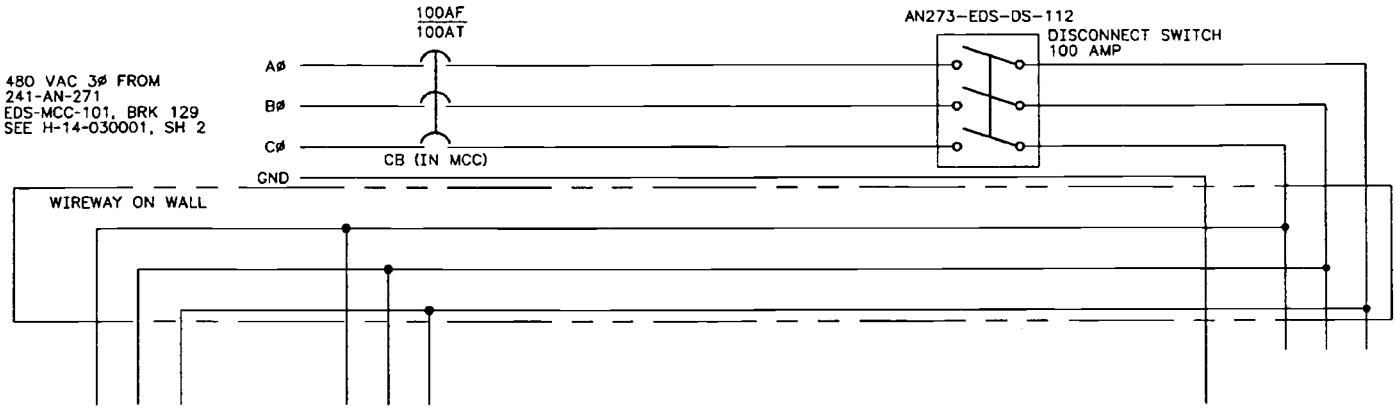

IS:

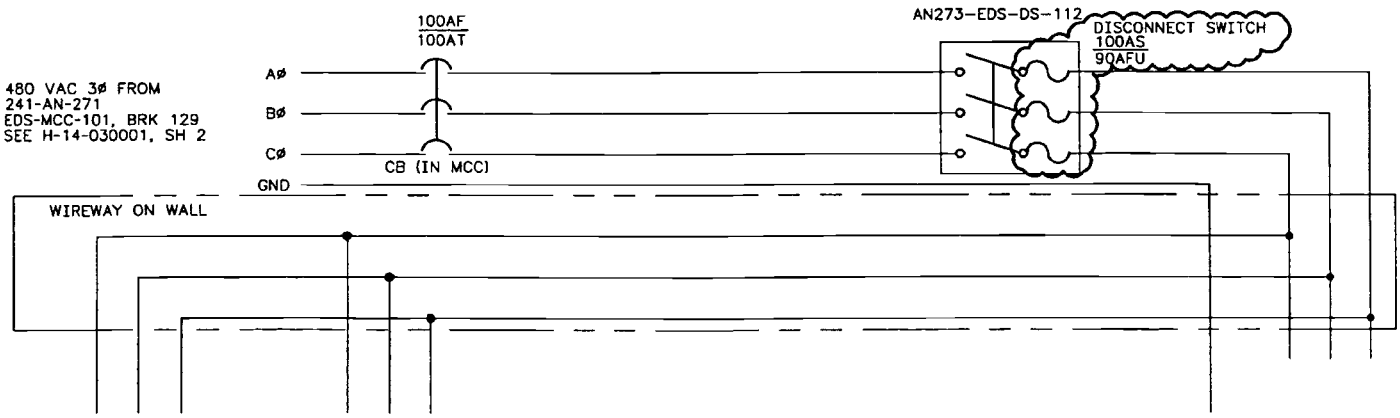

☐ DM ☒ FM ☐ TM	1a. ECN 725990 R0 1b. Proj. ECN N/A

Document/Drawing No. H-2-93194, Sheet 1 Revision 1

WAS:

QTY	PT NO	DESCRIPTION	MATERIAL/REFERENCE	QA LVL
X	1	INSTALLATION		III
1	2	SWITCH, DISCONNECT, 480VAC, 3-POLE, NEMA 1, 100 AMP, NON-FUSIBLE	CUTLER-HAMMER DH363UG	III

IS:

QTY	PT NO	DESCRIPTION	MATERIAL/REFERENCE	QA LVL
X	1	INSTALLATION		III
1	2	SWITCH, DISCONNECT, 480VAC, 3-POLE, HEAVY DUTY, NEMA 1, 100 AMP, FUSIBLE W/ 90A CLASS J FUSES	SQUARE D H363	III

Task# WRPS-PER-2008-0167.4

E-STARS[R] Report
Task Detail Report
07/08/2009 0913

TASK INFORMATION			
Task#	WRPS-PER-2008-0167.4		
Subject	WRPS-PER-2008-0167; RES; Perform work package TFC-WO-08-0276. Deliverable: Copy of work record.		
Parent Task#	WRPS-PER-2008-0167	**Status**	Open
Reference	WRPS-PER-2008-0167	**Due**	07/15/2009
Originator	^PER CAs	**Priority**	Medium
Originator Phone		**Category**	PER
Origination Date	12/30/2008 0929	**Generic1**	None
Remote Task#		**Generic2**	None
Deliverable	PER Review	**Generic3**	None
Class	None	**View Permissions**	Global
Instructions	*No Instructions*		

ROUTING LISTS

1	Corrective Action	Active
	Perform work package TFC-WO-08-0276. Deliverable: Copy of work record. Reference: Issue 8.4.4 AN Farm RESPONSIBLE MANAGER: When this corrective action is complete, enter a closure statement in E-STARS and close the E-STARS subtask. Refer to the Problem Evaluation Request procedure TFC-ESHQ-Q-C-C-01, Section 4.4 for closure documentation requirements	
	• Brooks, Rocky L - Assign - Completed with comments - 06/30/2009 1456 *Instructions:*	
	• Knight, Mark A - Review - Awaiting Response - Due Date - 07/12/2009 0000 *Instructions:*	

ATTACHMENTS

Attachments	1. DNFSB Electrical Letter Attachment.pdf 2. DNFSB Electrical Letter.pdf 3. Link to PER 4. RE_ WRPS-PER-2008-0167 _RES_.msg 5. Request to Extend WRPS-PER-2008-0167_2__4__7__22__31 _RES_.msg 6. Request to Extend WRPS-PER-2009-0167_2__4__7.msg 7. WRPS-PER-2008-0167 EVENT & CAUSAL FACTORING CHART.pdf 8. WRPS-PER-2008-0167.4 Work Record for TFC-WO-08-0276.pdf

COMMENTS

Poster	^PER Coordinator (Owen, Annette) - 04/24/2009 0707
	Due Date Extension
	Extend CA 4 to 5/25/09 per e-mail request. Work has begun in AN Farm but has been delayed in part due to issues with the electrical outage and farm ventilation system, and the need to support waste retrieval (C-104 to AN-101). Additional time is therefore required to complete these tasks. David Bragg
Poster	^PER Coordinator (Owen, Annette) - 05/28/2009 1557

Task# WRPS-PER-2008-0167.4

	Due Date Extension		
	Extend WRPS-PER-2008-0167.4 - Please assign a new due date of July 8, 2009. Work has been completed, however additional time is required to finish review and to complete/process paperwork. D Bragg		
Poster	Brooks, Rocky L (Judkins, Heather K) - 06/30/2009 1456		
	Corrective Action #4 Complete		
	Work package TFC-WO-08-0276 has been completed and a copy of the work record has been attached to the ESTARS task.		
Poster	Brooks, Rocky L (Judkins, Heather K) - 06/30/2009 1456		
	Completed		
	Work package TFC-WO-08-0276 has been completed and a copy of the work record has been attached to the ESTARS task.		
TASK DUE DATE HISTORY			
Modified	05/28/2009 1557 - ^PER Coordinator	**New Due Date**	07/08/2009 0000
Modified	04/24/2009 0708 - ^PER Coordinator	**New Due Date**	05/25/2009 0000
Modified	12/30/2008 0929 - ^PER CAs	**New Due Date**	03/31/2009 0000
Modified	12/30/2008 0929 - ^PER CAs	**New Due Date**	10/03/2009 0000
SUB TASK HISTORY			
No Subtasks			

-- end of report --

RPP WORK RECORD	1. Document Number: TFC-WO-08-0276

2. Work Item Title: AN-241 modify disconnect AN273-EDS-DS-112

Date	Turnover, Problem Description, Action Taken	Feed Back (X)	Name	Craft/ Resource Type	Hours
12/8/08	PLANING PUT THE ORIGINAL BOM IN THE WORK PACKAGE.		[illegible]	PLN.	
3/18/09	REMOVED OLD DISCONNECT & PART OF CONDUIT. INSTALLED NEW CONDUIT, FABRICATED NEW NIPPLES. MOUNTED NEW DISC.		HATFIELD BRADLEY		
3/19/09	RELAND WIRING, INSTALLED EQUIPMENT IDENTIFICATION LABEL. FUSES ARE NOT THE RIGHT ONES.		HATFIELD BRADLEY		
3-24-09	Installed correct fuses and left in open position Ready for post maintenance testing.		BRADLEY		
5-7-09	Work package complete. System energized for comparison with proper electrical operation of compressor.		W A Bruce.		
5/11/09	POST REVIEW COMPLETED BY [illegible]. ACCSAT		[illegible]		

Summary by Craft/Resource Type

Craft/Resource Type	Total Hours	Craft/Resource Type	Total Hours

KDD 5/8/09

A-6003-243 (11/04)

Message

From: Bragg, David A
Sent: Wednesday, December 31, 2008 9:46 AM
To: Owen, Annette
Cc: Nelson, Richard E; Roberts, Mark A
Subject: RE: WRPS-PER-2008-0167 (RES)

Annette,

Please add the following 5 new corrective actions. Thanks for your help.

David

New Corrective Action 1:

Ensure ECN in support of Work Package TFC-WO-08-2316 (to remove power from DACS Trailer) is released.
Deliverable: Electronic copy of released ECN.
Reference: Issue 8.1.4 SY Farm
Assign to Rick Nelson with Due Date of 05/07/09

New Corrective Action 2:

Ensure ECN in support of Work Package TFC-WO-08-2317 (to replace 200A breaker with 150 A breaker) is released.
Deliverable: Electronic copy of released ECN.
Reference: Issue 8.1.6 SY Farm
Assign to Rick Nelson with Due Date of 04/23/09

New Corrective Action 3:

Ensure ECN in support of Work Package TFC-WO-08-2318 (to replace 80A breaker EDS-DP-118 with a 40A breaker) is released.
Deliverable: Electronic copy of released ECN.
Reference: Issue 8.1.10 SY Farm
Assign to Rick Nelson with Due Date of 05/07/09

New Corrective Action 4:

Ensure ECN in support of MCC-E-001 breaker replacement is released OR provide justification of breaker acceptability.
Deliverable: Electronic copy of released ECN or written justification in comments section of corrective action to document breaker acceptability.
Reference: Issue 8.1.14 SY Farm
Assign to Rick Nelson with Due Date of 04/07/09

New Corrective Action 5:

Ensure ECN in support of Work Package TFC-WO-08-2319 (to replace 125A BKR-104 with a 100A breaker) is released.
Deliverable: Electronic copy of released ECN.
Reference: Issue 8.1.15 SY Farm
Assign to Rick Nelson with Due Date of 05/13/09

Message

From: Bragg, David A

Sent: Thursday, May 28, 2009 3:52 PM

To: ^WRPS Corrective Action Group

Cc: Knight, Mark A; Brooks, Rocky L; Owen, Annette

Subject: Request to Extend WRPS-PER-2008-0167.2/.4/.7/.22/.31 (RES)

Per direction of Mark Knight, please extend the following corrective actions:

WRPS-PER-2008-0167.2 - Please assign a new due date of July 8, 2009. Work has been completed, however additional time is required to finish review and to complete/process paperwork

WRPS-PER-2008-0167.4 - Please assign a new due date of July 8, 2009. Work has been completed, however additional time is required to finish review and to complete/process paperwork

WRPS-PER-2008-0167.7 - Please assign a new due date of July 8, 2009. Work has been completed, however additional time is required to finish review and to complete/process paperwork

WRPS-PER-2008-0167.22 - Please assign a new due date of August 18, 2009. Material (breakers) has been procured but not yet received. Additional time is required for material delivery and to perform fieldwork.

WRPS-PER-2008-0167.31 - Please assign a new due date of August 5, 2009. Work is dependant upon SY Farm outage schedule.

Thank you,

David Bragg
Base Operations Maintenance Engineering

Message

From: Bragg, David A

Sent: Thursday, April 23, 2009 11:43 AM

To: ^WRPS Corrective Action Group

Cc: Roberts, Mark A; Brooks, Rocky L

Subject: Request to Extend WRPS-PER-2009-0167.2/.4/.7

Per direction of Mark Roberts, acting for Mark Knight, please extend the following corrective actions;

WRPS-PER-2008-0167.2 to 05/25/09

WRPS-PER-2008-0167.4 to 05/25/09

WRPS-PER-2008-0167.7 to 05/25/09

Work has begun in AN Farm but has been delayed in part due to issues with the electrical outage and farm ventilation system, and the need to support waste retrieval (C-104 to AN-101). Additional time is therefore required to complete these tasks.

Thank you,

David Bragg
Base Operations Maintenance Engineering

Task# WRPS-PER-2008-0167.5

E-STARS[R] Report
Task Detail Report
07/08/2009 0914

TASK INFORMATION			
Task#	WRPS-PER-2008-0167.5		
Subject	WRPS-PER-2008-0167; RES; Ensure ECN in support of Work Package TFC-WO-08-0277 is released. Deliverable: Electronic copy of released ECN. Referen		
Parent Task#	WRPS-PER-2008-0167	**Status**	CLOSED 01/20/2009
Reference	WRPS-PER-2008-0167	**Due**	02/02/2009
Originator	^PER CAs	**Priority**	Medium
Originator Phone		**Category**	PER
Origination Date	12/30/2008 0929	**Generic1**	None
Remote Task#		**Generic2**	None
Deliverable	PER Review	**Generic3**	None
Class	None	**View Permissions**	Global
Instructions	*No Instructions*		

ROUTING LISTS

1	Corrective Action	Inactive
	Ensure ECN in support of Work Package TFC-WO-08-0277 is released. Deliverable: Electronic copy of released ECN. Reference: Issue 8.4.5 AN Farm RESPONSIBLE MANAGER: When this corrective action is complete, enter a closure statement in E-STARS and close the E-STARS subtask. Refer to the Problem Evaluation Request procedure TFC-ESHQ-Q-C-C-01, Section 4.4 for closure documentation requirements	
	• Nelson, Rick E - Assign - Completed with comments - 01/20/2009 0952 *Instructions:*	
	• Knight, Mark A - Review - Concur with comments - 01/20/2009 0952 *Instructions:*	

ATTACHMENTS

Attachments	1. DNFSB Electrical Letter Attachment.pdf 2. DNFSB Electrical Letter.pdf 3. Link to PER 4. RE_ WRPS-PER-2008-0167 _RES_.msg 5. WRPS-PER-2008-0167 EVENT & CAUSAL FACTORING CHART.pdf 6. WRPS-PER-2008-0167.5 CLOSURE ECN-725995-R0.pdf

COMMENTS

Poster	Nelson, Rick E (Bragg, David A) - 01/20/2009 0952
	Completed
	ECN-725995-R0 was released in support of work pkg TFC-WO-08-0277. See attachment for objective evidence. The PER originator has declined involvement in the disposition.
Poster	Knight, Mark A (Bragg, David A) - 01/20/2009 0952
	Concur
	ECN-725995-R0 was released in support of work pkg TFC-WO-08-0277. See attachment for objective evidence. The PER originator has declined involvement in the disposition.

Task# WRPS-PER-2008-0167.5			
Poster	^PER CAs (Owen, Annette) - 01/20/2009 1006		
	CLOSED		
	Closure statement and attached documentation are adequate to close this action.		
TASK DUE DATE HISTORY			
Modified	12/30/2008 0929 - ^PER CAs	**New Due Date**	02/02/2009 0000
Modified	12/30/2008 0929 - ^PER CAs	**New Due Date**	10/03/2009 0000
SUB TASK HISTORY			
No Subtasks			

-- end of report --

S CH2M HILL ENGINEERING CHANGE NOTICE	1a. ECN 725995 R 0
Page 1 of 3 ☐ DM ☒ FM ☐ TM	1b. Proj. ECN N/A - - R

2. Simple Modification ☒ Yes ☐ No	3. Design Inputs – For full ECNs, record information on the ECN-1 Form (not required for Simple Modifications)		4. Date 11/6/08
5. Originator's Name, Organization, MSIN, & Phone No. Rick Nelson, DST Engineering, S5-07 3729706	6. PrHA Number No. 00569 R - 0 ☐ N/A	7. USQ Number No. TF - 08 - 1838 - D R - 0 ☐ N/A	8. Related ECNs N/A
9. Title Replace non-fused disconnect with a fused disconnect	10. Bldg. / Facility No. AN Farm	11. Equipment / Component ID AN241-EDS-DS-120	12. Approval Designator N/A
13. Engineering Documents/Drawings to be Changed (Incl. Sheet & Rev. Nos.) H-14-030001 sheet 2 Rev. 13		14. Safety Designation ☐ SC ☐ SS ☒ GS ☐ N/A	15. Expedited/Off-Shift ECN? ☐ Yes ☒ No
16a. Work Package Number	16b. Modification Work Completed Responsible Engineer / Date	16c. Restored to Original Status (TM) N/A Responsible Engineer / Date	17. Fabrication Support ECN? ☐ Yes ☒ No

18. **Description of the Change** (Use ECN Continuation pages as needed)

PROBLEM STATEMENT: Disconnect switch AN241-EDS-DS-120 is non-fused. The normal short circuit rating for a non-fused disconnect is 10KA. The calculated short circuit current at the switch location is approximately 15.8KA per RPP-Calc 24467 section 8.4.5.

SOLUTION: Change the non-fused disconnect with a Square D fused disconnect (part #H363RB) with Bussman type "J" time delay, current limiting 200 kAIC, 600 volt AC fuses per the Square D catalog.

ANALYSIS: Square D fusible safety switches with type "J" fuses installed has a UL Listed Short Circuit Current Rating of 200,000 amps. Since the circuit is rated for 15.8 KA this application is acceptable, no additional analysis is necessary.

19. **Justification of the Change** (Use ECN Continuation pages as needed)

Engineering Rework ☐ Yes ☒ No
Training Impact ☐ Yes ☒ No

This modification resolves recommendation 8.4.5 of RPP-CALC-24467 which recommended changing the switch out with a fused disconnect to obtain the necessary AIC protection for the circuit. 90 amp fuses were selected to provide protection for the feeder wires which are #2 AWG rated at 95 amps for 60 degrees C per NEC 2005.

20. **ECN Category**

☐ Direct Revision
☒ Supplemental
☐ Void/Cancel

ECN Type

☐ Supersedure
☐ Revision

21. **Distribution**

Name	MSIN	Name	MSIN
Rick Nelson	S5-07		
Jeff Kissel	S5-07		
Ken Ewer	S5-07		
Ernie Hamm	S5-27		
Mazen Al-Wazani	R2-58		

Release Stamp

DATE: NOV 13 2008 HANFORD RELEASE
STA: 4 ID: 8

CH2M HILL ENGINEERING CHANGE NOTICE	1a. ECN 725995 R 0
Page 2 of 3 ☐ DM ☒ FM ☐ TM	1b. Proj. ECN N/A - - R

22. **Revisions Planned** (Include a brief description of the contents of each revision)
N/A

Note: All revisions shall have the approvals of the affected organizations as identified in block 12 "Approval Designator," on page 1 of this ECN.

23. **Commercial Grade Item Dedication Numbers** (associated with this design change)
N/A

24. **Engineering Data Transmittal Numbers** (associated with this design change, e.g., new drawings, new documents)
N/A

25. **Other Non Engineering (not in HDCS) documents that need to be modified due to this change**

Type of Document	Document Number	Update Completed On	Responsible Engineer (print/sign and date)
Alarm Response Procedure	N/A		
Operations Procedure	N/A		
Maintenance Procedure	N/A		

26. **Field Change Notice(s) Used?**
☐ **Yes** ☒ **No**
If Yes, Record Information on the ECN-2 Form, attach form(s), include a description of the interim resolution on ECN Page 1, block 18, and identify permanent changes.

NOTE: ECNs are required to record and approve all FCNs issued. If the FCNs have not changed the original design media then they are just incorporated into the design media via an ECN. If the FCN did change the original design media then the ECN will include the necessary engineering changes to the original design media.

27. **Design Verification Required?**
☐ **Yes** ☒ **No**
If Yes, as a minimum attach the one page checklist from TFC-ENG-DESIGN-P-17.

28. **Approvals**

Facility/Project Signatures		Date	A/E Signatures	Date
Resp. Engineer	Rick Nelson	11/13/08	Originator/Design Agent	
Resp. Manager	Mark Roberts	11/13/08	Professional Engineer	
Quality Assurance			Project Engineer	
IS&H Engineer			Quality Assurance	
NS&L Engineer			Safety	
Environ. Engineer			Designer	
Engineering Checker	Ken Ewer	11/13/08	Environ. Engineer	
Other	Ernie Hamm	11/13/2008	Other	
Other			Other	
Other			DEPARTMENT OF ENERGY / OFFICE OF RIVER PROTECTION	
Other			Signature or a Control Number that tracks the Approval Signature	
Other				
Other			ADDITIONAL SIGNATURES	
Other				
Other				

ENGINEERING CHANGE NOTICE CONTINUATION SHEET Page 3 of 3	☐ DM ☒ FM ☐ TM	1a. ECN 725~~657~~ 935 R0 1b. Proj. ECN W- -

Document/Drawing No. H-14-030001 Sht. ~~11~~ 2 Rev ~~8~~ 13 ~~2D~~ 11/13/08

(Note: A separate ECN Continuation page shall be used for each document/drawing to be modified.)

WAS:

MOTOR CONTROL CENTER
AN271-EDS-MCC-001
LOCATED IN INSTRUMENT BLDG 241-AN-271
SEE NOTE 3

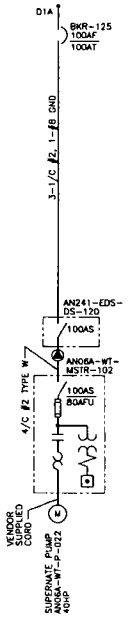

IS:

MOTOR CONTROL CENTER
AN271-EDS-MCC-001
LOCATED IN INSTRUMENT BLDG 241-AN-271
SEE NOTE 3

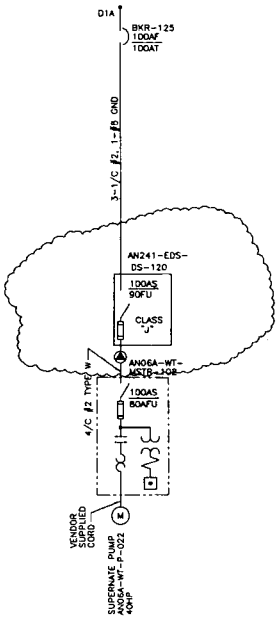

A-6003-565 (01/03)

Task# WRPS-PER-2008-0167.6

E-STARS[R] Report
Task Detail Report
07/08/2009 0925

TASK INFORMATION			
Task#	WRPS-PER-2008-0167.6		
Subject	WRPS-PER-2008-0167; RES; Perform work package TFC-WO-08-0277. Deliverable: Copy of work record. Reference: Issue 8.4.5		
Parent Task#	WRPS-PER-2008-0167	**Status**	CLOSED 03/04/2009
Reference	WRPS-PER-2008-0167	**Due**	03/17/2009
Originator	^PER CAs	**Priority**	Medium
Originator Phone		**Category**	PER
Origination Date	12/30/2008 0929	**Generic1**	None
Remote Task#		**Generic2**	None
Deliverable	PER Review	**Generic3**	None
Class	None	**View Permissions**	Global
Instructions	*No Instructions*		

ROUTING LISTS

1	Corrective Action	Inactive
	Perform work package TFC-WO-08-0277. Deliverable: Copy of work record. Reference: Issue 8.4.5 RESPONSIBLE MANAGER: When this corrective action is complete, enter a closure statement in E-STARS and close the E-STARS subtask. Refer to the Problem Evaluation Request procedure TFC-ESHQ-Q-C-C-01, Section 4.4 for closure documentation requirements	
	• Brooks, Rocky L - Assign - Completed with comments - 03/03/2009 0908 *Instructions:*	
	• Knight, Mark A - Review - Concur with comments - 03/04/2009 1352 *Instructions:*	

ATTACHMENTS

Attachments	1. DNFSB Electrical Letter Attachment.pdf 2. DNFSB Electrical Letter.pdf 3. Link to PER 4. RE_ WRPS-PER-2008-0167 _RES_.msg 5. WRPS-PER-2008-0167 EVENT & CAUSAL FACTORING CHART.pdf 6. WRPS-PER-2008-0167.6 CLOSURE ECN-725995-R0.pdf 7. WRPS-PER-2008-0167.6 Closure Information.doc.msg 8. WRPS-PER-2008-0167.6 CLOSURE TFC-WO-08-0277.pdf

COMMENTS

Poster	Brooks, Rocky L (Skaggs, Kristi) - 03/03/2009 0908
	Completed
	Please Close the subject PER based on the following information. Work order TFC-WO-08-0277 completed the task required by this PER action. See attached.
Poster	Knight, Mark A (Bragg, David A) - 03/04/2009 1352
	Concur

Task# WRPS-PER-2008-0167.6

	Work package TFC-WO-08-0277 was completed as required by the corrective action (see attachment for objective evidence). In addition, ECN-725995-R0 was signed off as work completed and is also attached as objective evidence. The PER originator declined involvement with the resolution of this corrective action.		
Poster	^PER CAs (Owen, Annette) - 03/04/2009 1445		
	CLOSED		
	Closure statement and attached documentation are adequate to close this action.		
TASK DUE DATE HISTORY			
Modified	12/30/2008 0929 - ^PER CAs	**New Due Date**	03/17/2009 0000
Modified	12/30/2008 0929 - ^PER CAs	**New Due Date**	10/03/2009 0000
SUB TASK HISTORY			
No Subtasks			

-- end of report --

S

CH2M HILL ENGINEERING CHANGE NOTICE

Page 1 of 3 ☐ DM ☒ FM ☐ TM

1a. ECN 725995 R 0

1b. Proj. ECN N/A - - R

2. Simple Modification ☒ Yes ☐ No	3. Design Inputs – For full ECNs, record information on the ECN-1 Form (not required for Simple Modifications)		4. Date 11/6/08
5. Originator's Name, Organization, MSIN, & Phone No. Rick Nelson, DST Engineering, S5-07 3729706	6. PrHA Number No. 00569 R - 0 ☐ N/A	7. USQ Number No. TF - 08 - 1838 - D R - 0 ☐ N/A	8. Related ECNs N/A
9. Title Replace non-fused disconnect with a fused disconnect	10. Bldg. / Facility No. AN Farm	11. Equipment / Component ID AN241-EDS-DS-120	12. Approval Designator N/A
13. Engineering Documents/Drawings to be Changed (Incl. Sheet & Rev. Nos.) H-14-030001 sheet 2 Rev. 13 Rick Nelson		14. Safety Designation ☐ SC ☐ SS ☒ GS ☐ N/A	15. Expedited/Off-Shift ECN? ☐ Yes ☒ No
16a. Work Package Number TFC-WO-08-0277	16b. Modification Work Completed JAN 19 2009 8 1/19/09 Responsible Engineer / Date	16c. Restored to Original Status (TM) N/A Responsible Engineer / Date	17. Fabrication Support ECN? ☐ Yes ☒ No

18. Description of the Change (Use ECN Continuation pages as needed)

PROBLEM STATEMENT: Disconnect switch AN241-EDS-DS-120 is non-fused. The normal short circuit rating for a non-fused disconnect is 10KA. The calculated short circuit current at the switch location is approximately 15.8KA per RPP-Calc 24467 section 8.4.5.

SOLUTION: Change the non-fused disconnect with a Square D fused disconnect (part #H363RB) with Bussman type "J" time delay, current limiting 200 kAIC, 600 volt AC fuses per the Square D catalog.

ANALYSIS: Square D fusible safety switches with type "J" fuses installed has a UL Listed Short Circuit Current Rating of 200,000 amps. Since the circuit is rated for 15.8 KA this application is acceptable, no additional analysis is necessary.

19. Justification of the Change (Use ECN Continuation pages as needed)

Engineering Rework ☐ Yes ☒ No
Training Impact ☐ Yes ☒ No

This modification resolves recommendation 8.4.5 of RPP-CALC-24467 which recommended changing the switch out with a fused disconnect to obtain the necessary AIC protection for the circuit. 90 amp fuses were selected to provide protection for the feeder wires which are #2 AWG rated at 95 amps for 60 degrees C per NEC 2005.

20. ECN Category

☐ Direct Revision
☒ Supplemental
☐ Void/Cancel

ECN Type

☐ Supersedure
☐ Revision

21. Distribution

Name	MSIN	Name	MSIN
Rick Nelson	S5-07		
Jeff Kissel	S5-07		
Ken Ewer	S5-07		
Ernie Hamm	S5-27		
Mazen Al-Wazani	R2-58		

Release Stamp

DATE: NOV 13 2008 HANFORD RELEASE STA: 4 ID: 8

JAN 19 2009 8

CH2M HILL ENGINEERING CHANGE NOTICE	1a. ECN 725995 R 0
Page 2 of 3 ☐ DM ☒ FM ☐ TM	1b. Proj. ECN N/A - - R

22. **Revisions Planned** (Include a brief description of the contents of each revision)
N/A

Note: All revisions shall have the approvals of the affected organizations as identified in block 12 "Approval Designator," on page 1 of this ECN.

23. **Commercial Grade Item Dedication Numbers** (associated with this design change)
N/A

24. **Engineering Data Transmittal Numbers** (associated with this design change, e.g., new drawings, new documents)
N/A

25. **Other Non Engineering (not in HDCS) documents that need to be modified due to this change**

Type of Document	Document Number	Update Completed On	Responsible Engineer (print/sign and date)
Alarm Response Procedure	N/A		
Operations Procedure	N/A		
Maintenance Procedure	N/A		

26. **Field Change Notice(s) Used?**
☐ Yes ☒ No
If Yes, Record Information on the ECN-2 Form, attach form(s), include a description of the interim resolution on ECN Page 1, block 18, and identify permanent changes.

NOTE: ECNs are required to record and approve all FCNs issued. If the FCNs have not changed the original design media then they are just incorporated into the design media via an ECN. If the FCN did change the original design media then the ECN will include the necessary engineering changes to the original design media.

27. **Design Verification Required?**
☐ Yes ☒ No
If Yes, as a minimum attach the one page checklist from TFC-ENG-DESIGN-P-17.

28. **Approvals**

Facility/Project Signatures		Date	A/E Signatures		Date
Resp. Engineer	Rick Nelson	11/13/08	Originator/Design Agent		
Resp. Manager	Mark Roberts	11/13/08	Professional Engineer		
Quality Assurance			Project Engineer		
IS&H Engineer			Quality Assurance		
NS&L Engineer			Safety		
Environ. Engineer			Designer		
Engineering Checker	Ken Ewer	11/13/08	Environ. Engineer		
Other	Ernie Hamm	11/13/2008	Other		
Other			Other		
Other			DEPARTMENT OF ENERGY / OFFICE OF RIVER PROTECTION		
Other			Signature or a Control Number that tracks the Approval Signature		
Other					
Other			ADDITIONAL SIGNATURES		
Other					
Other					

Work Order: TFC-WO-08-0277

Title: 241-AN Replace Disconnect Switch AN241-EDS-DS-120

Date Created:	6/18/2008 11:38:15	**Equipment:**	AN241-EDS-DS-120	**SC/I:**	☐
Work Flow:	WO Standard	**Planner:**	Kissel, Jeff	**Job Plan:**	
WO Type:	4 - MODIFICATION	**Assigned:**	Brule, Wayne G	**Farm/Facility:**	241AN
State:	Closed	**Phase Desig:**		**PM Id:**	
Rad Risk:	Low	**Flow Status:**	OK	**Frequency:**	
CACN:	200023	**Project Id:**		**Date Reqd:**	1/1/2000 8:19:00
Priority:	1.2 Non-imminent Safety issues			**Route Id:**	

Description:

As a result of performing the Electrical Distribution System calculation RPP-CALC-24467, R.0 the following issue has been identified:

Disconnect switch AN241-EDS-DS-120 is non-fused. The nominal short circuit rating for a non-fused disconnect switch is 10kA. The calculated short circuit current at the switch location per RPP-CALC-24467, R.0 is approximately 15.8 kA.

Recommendation: Fused disconnect switches assume the short circuit ratings of the installed fuse. Replace DS-120 with a 100A fused disconnect switch with 100A fuses suitable for the available short circuit current.

Strongly recommend to perform this work during upcoming 241-AN outage.

References:

RPP-CALC-24467, R.0
H-14-030001, sh.2, ZoneD-4

Work Order: TFC-WO-08-0277

Title: 241-AN Replace Disconnect Switch AN241-EDS-DS-120

Step 1 **Of** 1 **Step Id:** 001 **State:** Closed **Safety Class:** GS

Sched Start: **Sched Comp:** **Related Step/Link:**

Step Instructions:

See attached Work Instruction.

Assets

Seq	Asset Class	Asset Id	Asset Name	SC/I	Expiration Date
_____	M&TE	N/A	N/A	☐	_____
1	Equipment	AN241-EDS-DS-120	DISCONNECT SWITCH	☐	_____

Trades

Crew	Trade Id	Trade Description	Workers	Act Hrs.	Delay Code
	C020	Electricians	1	40.00	_____
	M010	First Line Supervisors	2	8.00	_____
	T050	Health Physics Technicians	1	16.00	_____

Attachments: There are 5 document(s) attached to this work order

Description	Path/Name
Header Attachment	
TFC-08-277 - SCANNED DOCUMENTS.pdf	TFC-08-277 - SCANNED DOCUMENTS__1001203.pdf
Step Attachment	
RWP TF-001	RWP TF-001
ECN-725995-R0	ECN-725995-R0
USQ TF-08-1838-D R-1 for ECN-725995-R0 and Work Instruction	USQ TF-08-1838-D R-0 for
TFC-WO-08-0277 Work Instructions.docx	TFC-WO-08-0277 Work Instructions__996291.docx

Electronic Approvals:

Date	State	Response	Profile	Name	Role
6/18/2008 11:38:15	Ready For Planning	Approved	ret_&_bo_ops_shift_mgr	Woehle, Christopher	
11/6/2008 9:51:42	In Planning	Approved	ret_&_bo_pm_planner	Kissel, Jeff	
12/3/2008 15:03:50	In Approval	Approved	ret_&_bo_pm_planner	Kissel, Jeff	bo_planner
12/3/2008 15:17:02	In Approval	Approved	ret_&_bo_rad_con	Marks, Jeff	bo_rad_con
12/4/2008 13:02:22	In Approval	Approved	ret_&_bo_fws	Wutzke, Ben	bo_field_work_suprv
12/4/2008 15:22:17	In Approval	Approved	ret_&_bo_pm_planner	Kissel, Jeff	resp. eng-per telecon
12/4/2008 15:22:25	Ready For Work	Approved	ret_&_bo_pm_planner	Kissel, Jeff	
1/15/2009 23:15:58	Working	Approved	ret_&_bo_ops_shift_mgr	Andrews, Jeffrey E	
1/20/2009 6:41:47	Ops Acceptance	Approved	ret_&_bo_ops_shift_mgr	Higham, Dale B	
1/22/2009 8:51:46	Post Review	Approved	ret_&_bo_pm_planner	Kissel, Jeff	bo_planner
1/22/2009 9:06:31	Closed	Approved	ret_&_bo_wcc_clerk	Bowen, Kae D	

FWC

FWS Completed By: Saunders, Clyde H **FWC Date:** 1/16/2009 12:00:00AM **Update Job Plan (Y/N):** _____

Completed Satisfactorily(yes,no): YES **Asset Condition:** _____

Comments: _____

Work Records

Type	Created By:	Created On:
Status Tracking	**Kissel, Jeff**	**12/4/2008 15:22:32**

Engineer Per Telecon Approval from Rick Nelson

WO Id: TFC-WO-08-0277

Waste Planning Checklist

1. Will waste be generated?	Yes
2. Will waste be generated in a radiological buffer area or contamination area?	Yes
3. Will EQ be removed? (TF-cover blocks, 222S-Process EQ)	No
4. Will waste contact process waste, tank waste, or tank waste contaminated material?	No
5. Will work involve soil removal?	No
6. Will there be any aerosol can(s) disposed of?	No
7. Will asbestos waste be disposed of?	No
8. Will HEPA filters be disposed of?	No
9. Will chemical products or paint be used or disposed of?	No
10. The following waste minimization techniques will be used?	source reduction

CHEMICAL/PAINT PRODUCTS

MSDS No	Chemical / Product Name

11. GENERAL DESCRIPTION OF WASTE

Electrical disconnect switch, misc. steel fasteners and copper wire.

11a. Estimate Waste Generated Quantity:	40	LBS	Per:	Day	Job Length	1 Day

WASTE MANAGEMENT CONTROLS		Comments
12. Is Waste Regulated as a Dangerous Waste?	No	

12a. Disposition Instructions:

- Bring into the radioactive contamination area only materials needed for the job.
- Place all of the waste into the nearest low-level waste collection container/shed.
- Package the waste in accordance with TO-100-052 procedure.

		Comments/Name
13. Facility Operations has been notified to take samples? (N/A if not required)	N/A	
14. Is a container already available for each disposition listed in the instructions?	Yes	
15. Does the quantity of the waste exceed capacity of available containers?	No	
16. Identify satellite accumulation area or accumulation area container(s) locations:	241-AN or Nearest LLW Collection	

Prepared By: Mandrake Pascual Date: 12/03/2008 Complete: ☑

RPP WORK RECORD	1. Document Number: TFC-WO-08-0277

2. Work Item Title: 241-AN Replace Disconnect Switch AN241-EDS-DS-120

Date	Turnover, Problem Description, Action Taken	Feed Back (X)	Name	Craft/ Resource Type	Hours
12/3/08	Review of work Scope completed. Ref				
	TC-001 adequate for use.		[illegible]	HP	
1/15/09	Partial Release of steps				
	4.1 and 4.2 only		[illegible]	SSM	
1/16/09	WCN #01 REMOVE WORK STEPS				
	4.2 AND 4.12. ADD TO WORK				
	STEP 4.7 "AND VERIFY WIRE		[illegible]	PLANNER	
	COLOR CODE FROM STEP 4.4"		RICK NELSON PER TPC [illegible]	ENGINEER	
	CHANGE STEP 5.1 TO READ		B. Wutzke	FWS	
	"5.1 WAS PERFORMED BY WORK		[illegible]	SSM	
	STEPS 4.4 AND 4.7 AND 4.9.				
1/16/09	A-Red B-Yel. C-Blue is order				
	of Phasing.				
	INSTALLED New disconnect per 0277		Guy Steen	ELECT	
	Relanded Feed wires Red-AΦ		Chad AGEN		
	yellow-BΦ Blue-CΦ				
1-16-09	field work complete Need				
	eng to sign off ECN		[illegible]		
1-19-09	ECN signed off		[illegible]		

Summary by Craft/Resource Type

Craft/Resource Type	Total Hours	Craft/Resource Type	Total Hours

KDD 1/20/09

A-6003-243 (11/04)

OPERATIONS WORK PACKAGE (WP) ACCEPTANCE CHECKLIST

? Number: TFC-WO-08-0277 Date: 1-20-08

Name of Reviewer: Dale Higham

	WP Review for Operations Acceptance (Do not Ops Accept if any "NO" checked - Return to Work Control to resolve)	YES	NO	N/A
1.	Has the Field Work Supervisor signed the work package field work complete?	●	○	○
	• Did the workers/FWS adequately document the work performed?	●	○	○
	• Has the FWS written work requests for all failed or deficient SSC?	○	○	●
	• Are the documented data, checklists and permits completed as required for the activity to allow it to be returned to Operations (Hold Points, supporting procedures, data sheets, signoffs, etc.)? ○ (Note Post Review signoffs are not required for Operations acceptance)	●	○	○
2.	If the work package involves an ECN, has engineering closed out the ECN (Modification Complete Block signed)?	●	○	○
	• If the work package involves a Temporary Modification ("TM" block is checked on the front page of the ECN), has engineering signed the "Restored To Original Status" block of the ECN? ○ Has the Temporary Modification been removed from the Temporary Modification Logbook? ○ Has the Caution Tag been removed from the Temporary Modification?	○	○	●
3.	Has the Controlling Organization Lockout "work complete" block on the Tag Out Authorization Form been signed for the work package? • If a single point lockout/tag out or Authorized Worker Lockout was used, is the form filled out completely (i.e., work complete and lock removed)?	●	○	○
4.	If a routing board update was required, was the routing board updated? • Were jumper leak check requirements implemented?	○	○	●
5.	Is the current status of the SSC known and acceptable for turnover to Operations (i.e., operable, returned to service, out of service)?	○	○	●

Comments:

WORK RELEASE CHECKLIST FOR OE'S

(For Operations Pre-Release Review)

Work Package No.: TFC-WO-08-0277 Reviewed By: RICH GUTIERREZ Rich Gutierrez Date: 12/5/08

Title: 241-AN REPLACE DISCONNECT SWITCH AN241-EDS-DS-120

Document Check:

N/A	YES	
○	●	Work Instructions
●	○	Data Sheets
○	●	BOM
○	●	CACN listed
●	○	Hold Points
○	●	Waste Planning Checklist
○	●	WHA / JSA
○	●	Pre-Job Safety Meeting form
○	●	Attendance Roster
○	●	RWP
●	○	ALARA Management Worksheet
●	○	OTP (Operational Test Procedure)
●	○	ATP (Acceptance Test Procedure)
○	●	USQ Eval. # (TF-08-1838-D R-1
○	●	ECNs (# 725995)
		(#) (#)
○	●	Reference Drawings
○	●	Lockout / Tagout Authorization or AWT form prepared
●	○	Asbestos Work Permit / Negative Exposure Assessment
●	○	Hot Work Permit (fire watch required)
●	○	Confined Space Entry Permit
●	○	Non-Permit Confined Space monitoring form
●	○	Excavation Permit
●	○	Ground Scan
●	○	EEWP
●	○	Procedures
●	○	Vehicle Route Map
●	○	Critical Lift Procedure
●	○	Hoisting and Rigging Information
●	○	MSDS Sheets
●	○	Glove Bag / Containment Form
●	○	Ignition Source Control Requirements Screening
●	○	Standing Orders

Limiting Conditions for Operation (LCOs):

N/A	YES		
●	○	3.1.1	Transfer Leak Detection Systems
●	○	3.1.2	Backflow Prevention Systems
●	○	3.2.1	DST Primary Ventilation Systems
●	○	3.2.2	SST Flammable Gas Concentration
●	○	3.2.3	SST 241-B-203 and 241-B-204 Passive Ventilation Systems

Administrative Controls (ACs):

N/A	YES		
●	○	5.10	Flammable Gas Controls
●	○	5.11	Transfer Controls
●	○	5.12	Administrative Lock Controls
●	○	5.13	Bulk Chemical Addition Controls
●	○	5.14	Dome Loading Controls
●	○	5.15	Tank Farm Instrumentation
●	○	5.16	Corrosion Mitigation Controls
●	○	5.17	Vacuum Retrieval Controls

242-A Administrative Controls (ACs):

N/A	YES		
●	○	5.6.1.1	Restriction on 242-A Pump Room and Evaporator Room Access
●	○	5.6.1.2	Sample Cubicle Leak Detection
●	○	5.6.1.4	Fire Protection
●	○	5.6.1.11	242-A Evaporator Instrumentation

Comments:

The breaker identified for this work is currently locked out for the 106-AN pit work on going by Construction forces. A Controlling Org Lock and Tag is hanging. R. Gutierrez

Steps 4.1 and 4.2 RG 1-16-09 shall be completed prior to installing LOTO. [illegible] 1/14/09 R Gutierrez 12/5/08

WORK RELEASE CHECKLIST FOR OE'S (continued)

(For Operations Pre-Release Review)

Work Package No.: TFC-WO-08-0277 Reviewed By: RICH GUTIERREZ Rich Gutierrez Date: 12/5/08

Title: 241-AN REPLACE DISCONNECT SWITCH AN241-EDS-DS-120

		YES	N/A
1.	Is configuration of equipment and systems properly identified for safe operation while the work is being performed?	◉	○
2.	Is operability of the equipment and systems properly restored as part of the retesting? (SS/SC must address retest.)	◉	○
3.	Are the Lock and Tag steps required to install and remove included in the work document and are the forms complete and in the WP?	◉	○
4.	Are TSR, LCO, OSD, and AB requirements properly included? (Note for LCO entry/exit.)	○	◉
5.	Are work scope boundaries clear and the forms complete and in the WP?	◉	○
6.	Has the work scope been evaluated to prevent start-up of interconnected equipment even if the equipment presents no hazards to the workers?	◉	○
6.a.	Are caution tags or Administrative locks required to prevent start-up of interconnected equipment?	○	◉

Comments:

17. Lockout/Tagout Number	LOCKOUT/TAGOUT AUTHORIZATION FORM	18. Page 2 of 2
241AN-09-002		

19. Tag No.	20. Component Tagged	21. Location	22. Lock Number	23. Required Position or Condition	24. Authorized By Sign/Date	25. Installed By Sign/Date	26. Independently Verified By Sign/Date	27. Safe Condition Check By Sign/Date	28. Removal Approved Sign/Date	29. Restoration Position/ Condition	30. Removed By Sign/Date
1	AN271-EDS-BKR-125	AN271-EDS-MCC-001	169	OFF	1/16/09	1-16-09	1-16-09	1-16-09			

COPY

31. Tag No(s).	32. Safe Condition Check
1	Perform zero electrical energy check at AN241-EDS-DS-120.

16. Surveillance Record — Required Surveillance Periodicity: Monthly

Initials	Date	Initials	Date	Initials	Date	Initials	Date	Initials	Date	Initials	Date	Initials	Date	Initials	Date	Initials	Date

A-6004-460 (REV 0)

17. Lockout/Tagout Number
241AN-09-002

LOCKOUT/TAGOUT AUTHORIZATION FORM

19. Tag No.	20. Component Tagged	21. Location	22. Lock Number	23. Required Position or Condition	24. Authorized By Sign/Date	25. Installed By Sign/Date	26. Independently Verified By Sign/Date	27. Safe Condition Check By Sign/Date	28. Removal Approved Sign/Date	29. Restoration Position/ Condition	30. Removed By Sign/Date
1	AN271-EDS-BKR-125	AN271-EDS-MCC-001	169	OFF	1/16/09	1-16-09	1-16-09	1-16-09			

COPY

31. Tag No(s).	32. Safe Condition Check
1	Perform zero electrical energy check at AN241-EDS-DS-120.

16. Surveillance Record

Required Surveillance Periodicity: Monthly

Initials	Date	Initials	Date	Initials	Date	Initials	Date	Initials	Date	Initials	Date	Initials	Date	Initials	Date	Initials	Date

SAFETY IS NO ACCIDENT	PRE-JOB BRIEFING

Job Description/Title
241-AN Replace Disconnect Switch AN241-EDS-DS-120

Date: 1-16-09

Work Order No.: TFC-WO-08-0277

Supervisor: [illegible]

Place a check mark in all that apply

* Use as applicable for General Pre-Job Briefings
\# Required for medium or high radiological risk work activities

Define the Work

- [x] #*Work Scope
- [ ] *Purpose and nature of work
- [ ] #*Tasks and Critical Tasks
- [ ] *Tasks assignments
- [ ] *Procedural or Work Instruction Adherence/Use
- [ ] #*Roles and Responsibilities
- [ ] *Special qualifications or training
- [ ] Handoffs
- [ ] Controlling Authority
- [ ] Outside Resources Required
- [ ] _____

Hazards and Controls

- [ ] #*Review the Worksite Hazard Analysis (WHA)
- [ ] #*Discuss the controls and PPE identified in the WHA
- [ ] *Discuss the precautions in the work instructions
- [ ] *Discuss any warnings or cautions listed in the work instruction or procedure
- [ ] *Error Likely situations
- [ ] Discuss contingency plans
- [ ] #*Discuss the permits and their controls
- [ ] #*Discuss any ALARA aspects of the work
- [ ] Discuss Voluntary Use of Respirators
- [ ] Discuss engineered or administrative controls for Radiological Containments
- [ ] _____

Prerequisites

- [ ] #*Review the prerequisites listed in work instructions or procedures
- [ ] Review Communication requirements (What, Who, When) (Three-Way Communications)
- [ ] Tools, Materials, or Equipment required to be staged
- [ ] *Technical Specification Requirements (TSRs)
- [ ] *Limiting Condition for Operations (LCOs)
- [ ] *Valve Manipulation Walkdowns (see Pre-Job Briefing procedure)
- [ ] Oversight Requirements (Senior Supervisory Watch)
- [ ] _____

Special Requirements or Unusual Conditions

- [ ] #*Interface with other organizations
- [ ] *Potential Communication obstacles
- [ ] #*Other Work in the Area
- [ ] Changes in Scope or Work Conditions
- [ ] #*Procedure questions or errors
- [ ] Equipment line-up/configuration
- [ ] #Hold Points, and who is responsible to complete
- [ ] _____

Lockout Tag-out Requirements

- [x] *Review Tagout Authorization and Tags
- [x] Identify affected employees
- [x] *Identify Authorized workers
- [ ] Identify Primary Authorized worker (if used)
- [ ] *Authorized Worker Lock and Tag
- [x] *Personal Locking Devices
- [ ] _____

Abnormal Events

- [x] #*Emergency Response
- [ ] *Alarm Response
- [ ] Location of Nearest:
  - Spill Kit
  - Operable Safety Shower
  - Operable Decontamination facility
  - Event response equipment, supplies, personnel
- [ ] *Roles and Responsibilities for Injury, Spills, etc.
- [ ] *Lessons Learned
- [ ] _____

Post Work Activities

- [ ] #*House Keeping/Final Cleanup
- [ ] *Post Maintenance Testing
- [ ] Post Job Reviews/Debriefs
- [ ] Post Job ALARA review
- [ ] _____

Comments

Supervisor signature and date indicates that all personnel have been briefed on the areas indicated by a check mark.

Supervisor Signature _____ Date 1-16-09

A-6002-893 (REV 1)

CH2M HILL
ATTENDANCE ROSTER

Subject:	Date: 1-16-09
	Leader: [illegible]

NAME (Print)	Signature	Position/Title	Organization
Clyde Spencer	[illegible]	FWS	BO
GUY STEEN	[illegible]	ELECT	BO
Chad Ayon	[illegible]	Elect.	BO
Perry Page	[illegible]	Elect	BO

A-6003-211 (11/05)

Work Order: TFC-WO-08-0277

Title: 241-AN Replace Disconnect Switch AN241-EDS-DS-120

Date Created: 6/18/2008 11:38:15
Equipment: AN241-EDS-DS-120
SC/I: ☐
WorkFlow: WO Standard
Planner: Kissel, Jeff
Job Plan:
WO Type: 4 - MODIFICATION
Assigned: Brule, Wayne G
Farm/Facility: 241AN
State: Ready For Work
Phase Desig:
PM Id:
RAD Risk: Low
Flow Status: OK
Frequency:
CACN: 200023
Project Id:
Date Reqd: 1/1/2000 08:19:00
Priority: 1.2 Non-imminent Safety issues
Route Id:

Description:

As a result of performing the Electrical Distribution System calculation RPP-CALC-24467, R.0 the following issue has been identified:

Disconnect switch AN241-EDS-DS-120 is non-fused. The nominal short circuit rating for a non-fused disconnect switch is 10kA. The calculated short circuit current at the switch location per RPP-CALC-24467, R.0 is approximately 15.8 kA.

Recommendation: Fused disconnect switches assume the short circuit ratings of the installed fuse. Replace DS-120 with a 100A fused disconnect switch with 100A fuses suitable for the available short circuit current.

Strongly recommend to perform this work during upcoming 241-AN outage.

References:

RPP-CALC-24467, R.0
H-14-030001, sh.2, ZoneD-4

KDB 1/20/09

Work Order: TFC-WO-08-0277

Title: 241-AN Replace Disconnect Switch AN241-EDS-DS-120

Step 1 **Of** 1 **Step Id:** 001 **State:** Ready For Work **Safety Class:**

Sched Start: **Sched Comp:** **Related Step/Link:**

Step Instructions:

See attached Work Instruction.

Assets	Seq	Asset Class	Asset Id	Asset Name	SC/I	Expiration Date
	1	Equipment	AN241-EDS-DS-120	DISCONNECT SWITCH	☐	

Trades	Crew	Trade Id:	Trade Description:	Workers	Act Hrs.	Delay Code
		M010	First Line Supervisors	2	[illegible]	
		T050	Health Physics Technicians	1	16	
		C020	Electricians	1	40	

Attachments: There are 4 document(s) attached to this work order

Description	Path/Name
Step Attachment	
TFC-WO-08-0277 Work Instructions.docx	TFC-WO-08-0277 Work Instructions__996291.docx
ECN-725995-R0	ECN-725995-R0
RWP TF-001	RWP TF-001
USQ TF-08-1838-D R-1 for ECN-725995-R0 and Work In:	USQ TF-08-1838-D R-0 for

Electronic Approvals:

Date	State	Response	Profile	Name	Role
6/18/2008 11:38:15	Ready For Planning	Approved	ret_&_bo_ops_shift_mgr	Woehle, Christopher	
11/6/2008 09:51:42	In Planning	Approved	ret_&_bo_pm_planner	Kissel, Jeff	
12/3/2008 15:03:50	In Approval	Approved	ret_&_bo_pm_planner	Kissel, Jeff	bo_planner
12/3/2008 15:17:02	In Approval	Approved	ret_&_bo_rad_con	Marks, Jeff	bo_rad_con
12/4/2008 13:02:22	In Approval	Approved	ret_&_bo_fws	Wutzke, Ben	bo_field_work_suprv
12/4/2008 15:22:17	In Approval	Approved	ret_&_bo_pm_planner	Kissel, Jeff	resp. eng-per telecon
12/4/2008 15:22:25	Ready For Work	Approved	ret_&_bo_pm_planner	Kissel, Jeff	

FWC

FWS Completed By: [signature] **FWC Date:** 1-16-09 **Update Job Plan (Y/N):**

Completed Satisfactorily(yes,no): yes **Asset Condition:**

Comments:

Tank Farm Work Instruction
TFC-WO-08-0277
241-AN Replace Disconnect Switch AN241-EDS-DS-120
Record Copy 12/04/08

1.0 SCOPE

- **The purpose of this work instruction is to replace non fusible disconnect switch AN241-EDS-DS-120 with a fusible disconnect switch per ECN-725995-R0**

2.0 LIMITATIONS/PRECAUTIONS

[ ] 2.1. This work package will utilize radiological limits and controls specified on RWP TF-001

Note: Documented radiological surveys are required when opening potentially contaminated systems, items or when accessing previously unexposed surfaces

3.0 PREREQUISITES

[ ] 3.1. FWS ensure a pre-job briefing has been conducted in accordance with TFC-OPS-MAINT-C-02.

Tank Farm Work Instruction
TFC-WO-08-0277
241-AN Replace Disconnect Switch AN241-EDS-DS-120
Record Copy 12/04/08

4.0 SPECIFIC WORK INSTRUCTIONS

Note: All work steps are per ECN-725995-R0

Note: ~~Admin conditions for this circuit are established at C Farm. This work does not affect the admin condition.~~ N/A JMC 1-16-09

[ ] 4.1. Unplug the power cable at "AN241-EDS-DS-120".

~~[ ] 4.2. Ensure "AN241-EDS-DS-120" is energized and perform a rotation check.~~ WCN #01 1-16-09 JMC

~~Rotation~~ _____

[ ] 4.3. Isolate, Lockout/Tagout "AN241-EDS-DS-120".

[ ] 4.4. Ensure wires in "AN241-EDS-DS-120" are color coded to maintain phase rotation. (Use Lifted/Landed Lead Sheets if needed)

[ ] 4.5. Remove "AN241-EDS-DS-120".

[ ] 4.6. Install new fusible disconnect switch and adjust the mounting rack as needed to accommodate the larger switch.

[ ] 4.7. Rework the conduit and wire into the new switch. AND VERIFY WIRE COLOR CODE FROM STEP 4.4. WCN #01 1-16-09 JMC

[ ] 4.8. Install 90 AMP fuses. (See BOM)

[ ] 4.9. Open and close the switch to verify operation.

[✓] 4.10. Transfer the label from the old disconnect switch to the new switch or fabricate and install a new label.

[ ] 4.11. Remove Lockout/Tagout.

~~[ ] 4.12. Energize "AN241-EDS-DS-120" and perform a rotation check and Ensure the rotation is the same as step 4.5. If rotation is not correct, re-establish Lockout/Tagout and swap two leads and re-perform phase rotation.~~ WCN #01 1-16-09

~~Rotation _____ Should be the same as step 4.2~~

[ ] 4.13. Plug in power cord.

5.0 POST WORK ACTIVITY TESTING

[ ] 5.1. Was performed by work steps ~~4.9~~ 4.4 and ~~4.12~~ 4.7 AND 4.9. WCN #01 1-16-09

6.0 RESTORATION ACTIONS

[ ] 6.1. FWS ensure the job site has been cleaned up and all waste has been placed in the proper containers per Waste Planning Checklist and TO-100-052.

[ ] 6.2. Engineering Closeout review complete, ENSURE ECN-725995-R0 has been closed and a copy of the "MODIFICATION COMPLETE" cover page has been inserted into the Work Package.

_____ 1/19/09

Engineering Signature Date

WO Id: TFC-WO-08-0277

Waste Planning Checklist

1. Will waste be generated?	Yes	CHEMICAL/PAINT PRODUCTS
2. Will waste be generated in a radiological buffer area or contamination area?	Yes	
3. Will EQ be removed? (TF-cover blocks, 222S-Process EQ)	No	
4. Will waste contact process waste, tank waste, or tank waste contaminated material?	No	
5. Will work involve soil removal?	No	
6. Will there be any aerosol can(s) disposed of?	No	
7. Will asbestos waste be disposed of?	No	
8. Will HEPA filters be disposed of?	No	
9. Will chemical products or paint be used or disposed of?	No	
10. The following waste minimization techniques will be used?	source reduction	

11. GENERAL DESCRIPTION OF WASTE

Electrical disconnect switch, misc. steel fasteners and copper wire.

11a. Estimate Waste Generated Quanity:	40	LBS	Per:	Day	Job Length 1 Day

WASTE MANAGEMENT CONTROLS **Comments**

12. Is Waste Regulated as a Dangerous Waste? No

12a. Disposition Instructions:

- Bring into the radioactive contamination area only materials needed for the job.
- Place all of the waste into the nearest low-level waste collection container/shed.
- Package the waste in accordance with TO-100-052 procedure.

13. Facility Operations has been notified to take samples? (N/A if not required)	N/A	
14. Is a container already available for each disposition listed in the instructions?	Yes	
15. Does the quantity of the waste exceed capacity of available containers?	No	
16. Identify satellite accumulation area or accumulation area container(s) locations:	241-AN or Nearest LLW Collection	

Prepared By:Mandrake Pascual Date: 12/03/2008 Complete: ✓

ORIGINAL

CH2M BILL OF MATERIAL

ISSUED

B.O.M. Suppl. 0

End Use: 241-AN Electrical		Wk. Pkg. No.: TFC-WO-08-0277	CACN/COA: 200029/FA60
Date: 11/13/2008	Requestor: Kissel, Jeffrey W	Delivery Location: Kissel	Premium Freight ☐ Priority: 1.2 CGI:

Date Required: 11/21/2008

☐ Mandatory ☒ Desired

Special Instructions/Emergency Justification:

Material Services READY TO SCHEDUL Date 12-3-08 LDN

RELEASED COMPLETE

Line # Released: Released To:

Signature: Dave Wilz

Suggested Vendor:

Stoneway

Kissel, Jeffrey W (372-1571)	11/13/2008	Dunn, Robert B (373-4719)	11/13/2008
Requestor	Date	Manager	Date
Nelson, Rick e. (Chg) (372-9706)	11/20/2008	Deleon, Sosten O (372-8993)	11/20/2008
Engineer	Date	QA Engineer	Date
Not Required per DRA		Not Required per DRA	
RadCon	Date	Environmental	Date
Not Required per DRA		Not Required per DRA	
Industrial Health	Date	Chemical Management	Date
Not Required per DRA		Not Required per DRA	
Safety & Health	Date	Resp. Protection	Date
Not Required per DRA		Duncan, Vella (373-3852)	11/20/2008
Cost Account Manager	Date	Material Coordinator Manager	Date
Haggerty, Mike (373-3616)	11/21/2008		
Material Coordinator	Date		

Item	Quantity	Estimated Cost	Safety Class	HAZMAT	MSDS	NRTL	Approval Desig.	Quality Level	QC Approval	Date/Qty Ordered	Order No.	Catalog No.
1	1	408.00	GS			Y	Q*	3	12-3-08	11/21/2008, 1.00	MOH	0000643708
QAIP	Unit EACH	Delivery Date	Storage Level C - INDOORS (WEATHER TIGHT)							Date/Qty Staged 11/21/2008, 1.00	Storage Bldg/Area 2750/200E	Storage Location E-26

QA Clauses:
B32, B65

Material Description:
SWITCH, SAFETY, HEAVY DUTY, 100AMP 600VAC, 3 POLE FUSIBLE

Additional Description:

Purchasing Description:

Comments:

Part Number	Equipment Type	Manufacturer	Drawing/ECN/Spec Number
H363RB	ELECTRICAL	SQUARE D	ECN-725995-R0

Item	Quantity	Estimated Cost	Safety Class	HAZMAT	MSDS	NRTL	Approval Desig.	Quality Level	QC Approval	Date/Qty Ordered	Order No.	Catalog No.
2	3	75.00	GS			Y	Q*	3	12-3-08	11/21/2008, 3.00	10002027	0000645924
QAIP	Unit EACH	Delivery Date	Storage Level C - INDOORS (WEATHER TIGHT)							Date/Qty Staged 12/03/2008, 3.00	Storage Bldg/Area 2750/200E	Storage Location E-26

QA Clauses:
B32, B65

Material Description:
Fuse, Class J, 90 Amp,

Additional Description:

Purchasing Description:

Comments:

Part Number	Equipment Type	Manufacturer	Drawing/ECN/Spec Number
AJT90	ELECTRICAL	Ferraz Shawmut	ECN-725995-R0

Item	Quantity	Estimated Cost	Safety Class	HAZMAT	MSDS	NRTL	Approval Desig.	Quality Level	QC Approval	Date/Qty Ordered	Order No.	Catalog No.
3	1	25.00	GS				N/A	0		11/21/2008, 1.00	H00534142969	PC00036204
	Unit EACH	Delivery Date	Storage Level C - INDOORS (WEATHER TIGHT)							Date/Qty Staged 11/25/2008, 1.00	Storage Bldg/Area 2750/200E	Storage Location E-26

QA Clauses:

N/A			
Material Description: Hub, Rainproof, Bolt On, 1 1/2"		Additional Description:	
Purchasing Description:		Comments:	
Part Number B150	Equipment Type ELECTRICAL	Manufacturer Square D	Drawing/ECN/Spec Number

S

CH2M HILL ENGINEERING CHANGE NOTICE

Page 1 of 3 ☐ DM ☒ FM ☐ TM

1a. ECN 725995 R 0

1b. Proj. ECN N/A - - R

2. Simple Modification	3. Design Inputs – For full ECNs, record information on the ECN-1 Form (not required for Simple Modifications)		4. Date
☒ Yes ☐ No			11/6/08
5. Originator's Name, Organization, MSIN, & Phone No.	**6. PrHA Number**	**7. USQ Number**	**8. Related ECNs**
Rick Nelson, DST Engineering, S5-07 3729706	No. 00569 R - 0 ☐ N/A	No. TF - 08 - 1838 - D R - 0 ☐ N/A	N/A
9. Title	**10. Bldg. / Facility No.**	**11. Equipment / Component ID**	**12. Approval Designator**
Replace non-fused disconnect with a fused disconnect	AN Farm	AN241-EDS-DS-120	N/A
13. Engineering Documents/Drawings to be Changed (Incl. Sheet & Rev. Nos.)		**14. Safety Designation**	**15. Expedited/Off-Shift ECN?**
H-14-030001 sheet 2 Rev. 13 Rick Nelson		☐ SC ☐ SS ☒ GS ☐ N/A	☐ Yes ☒ No
16a. Work Package Number	**16b. Modification Work Completed**	**16c. Restored to Original Status (TM)**	**17. Fabrication Support ECN?**
TFC-WO-08-0277	JAN 19 2009 8 1/19/09 Responsible Engineer / Date	N/A Responsible Engineer / Date	☐ Yes ☒ No

18. Description of the Change (Use ECN Continuation pages as needed)

PROBLEM STATEMENT: Disconnect switch AN241-EDS-DS-120 is non-fused. The normal short circuit rating for a non-fused disconnect is 10KA. The calculated short circuit current at the switch location is approximately 15.8KA per RPP-Calc 24467 section 8.4.5.

SOLUTION: Change the non-fused disconnect with a Square D fused disconnect (part #H363RB) with Bussman type "J" time delay, current limiting 200 kAIC, 600 volt AC fuses per the Square D catalog.

ANALYSIS: Square D fusible safety switches with type "J" fuses installed has a UL Listed Short Circuit Current Rating of 200,000 amps. Since the circuit is rated for 15.8 KA this application is acceptable, no additional analysis is necessary.

19. Justification of the Change (Use ECN Continuation pages as needed)

Engineering Rework ☐ Yes ☒ No
Training Impact ☐ Yes ☒ No

This modification resolves recommendation 8.4.5 of RPP-CALC-24467 which recommended changing the switch out with a fused disconnect to obtain the necessary AIC protection for the circuit. 90 amp fuses were selected to provide protection for the feeder wires which are #2 AWG rated at 95 amps for 60 degrees C per NEC 2005.

20. ECN Category

☐ Direct Revision
☒ Supplemental
☐ Void/Cancel

ECN Type

☐ Supersedure
☐ Revision

21. Distribution

Name	MSIN	Name	MSIN
Rick Nelson	S5-07		
Jeff Kissel	S5-07		
Ken Ewer	S5-07		
Ernie Hamm	S5-27		
Mazen Al-Wazani	R2-58		

Release Stamp

DATE: NOV 13 2008 HANFORD RELEASE
STA: 4 ID: 8

CH2M HILL ENGINEERING CHANGE NOTICE	1a. ECN 725995 R 0
Page 2 of 3 ☐ DM ☒ FM ☐ TM	1b. Proj. ECN N/A - - R

22. **Revisions Planned** (Include a brief description of the contents of each revision)
N/A

Note: All revisions shall have the approvals of the affected organizations as identified in block 12 "Approval Designator," on page 1 of this ECN.

23. **Commercial Grade Item Dedication Numbers** (associated with this design change)
N/A

24. **Engineering Data Transmittal Numbers** (associated with this design change, e.g., new drawings, new documents)
N/A

25. **Other Non Engineering (not in HDCS) documents that need to be modified due to this change**

Type of Document	Document Number	Update Completed On	Responsible Engineer (print/sign and date)
Alarm Response Procedure	N/A		
Operations Procedure	N/A		
Maintenance Procedure	N/A		

26. **Field Change Notice(s) Used?**
☐ **Yes** ☒ **No**
If Yes, Record Information on the ECN-2 Form, attach form(s), include a description of the interim resolution on ECN Page 1, block 18, and identify permanent changes.

NOTE: ECNs are required to record and approve all FCNs issued. If the FCNs have not changed the original design media then they are just incorporated into the design media via an ECN. If the FCN did change the original design media then the ECN will include the necessary engineering changes to the original design media.

27. **Design Verification Required?**
☐ **Yes** ☒ **No**
If Yes, as a minimum attach the one page checklist from TFC-ENG-DESIGN-P-17.

28. **Approvals**

Facility/Project Signatures		Date	A/E Signatures	Date
Resp. Engineer	Rick Nelson	11/13/08	Originator/Design Agent	
Resp. Manager	Mark Roberts	11/13/08	Professional Engineer	
Quality Assurance			Project Engineer	
IS&H Engineer			Quality Assurance	
NS&L Engineer			Safety	
Environ. Engineer			Designer	
Engineering Checker	Ken Ewer	11/13/08	Environ. Engineer	
Other	Ernie Hamm	11/13/2008	Other	
Other			Other	
Other			DEPARTMENT OF ENERGY / OFFICE OF RIVER PROTECTION	
Other			Signature or a Control Number that tracks the Approval Signature	
Other				
Other			ADDITIONAL SIGNATURES	
Other				
Other				

Tank Farm Work Instruction
TFC-WO-08-0277
241-AN Replace Disconnect Switch AN241-EDS-DS-120
Record Copy 12/04/08

1.0 SCOPE

- **The purpose of this work instruction is to replace non fusible disconnect switch AN241-EDS-DS-120 with a fusible disconnect switch per ECN-725995-R0**

2.0 LIMITATIONS/PRECAUTIONS

[ ] 2.1. This work package will utilize radiological limits and controls specified on RWP TF-001

Note: Documented radiological surveys are required when opening potentially contaminated systems, items or when accessing previously unexposed surfaces

3.0 PREREQUISITES

[ ] 3.1. FWS ensure a pre-job briefing has been conducted in accordance with TFC-OPS-MAINT-C-02.

Tank Farm Work Instruction
TFC-WO-08-0277
241-AN Replace Disconnect Switch AN241-EDS-DS-120
Record Copy 12/04/08

4.0 SPECIFIC WORK INSTRUCTIONS

Note: All work steps are per ECN-725995-R0

Note: Admin conditions for this circuit are established at C Farm. This work does not affect the admin condition.

[ ] 4.1. Unplug the power cable at "AN241-EDS-DS-120".

[ ] 4.2. Ensure "AN241-EDS-DS-120" is energized and perform a rotation check.

Rotation_____

[ ] 4.3. Isolate, Lockout/Tagout "AN241-EDS-DS-120".

[ ] 4.4. Ensure wires in "AN241-EDS-DS-120" are color coded to maintain phase rotation. (Use Lifted/Landed Lead Sheets if needed)

[ ] 4.5. Remove "AN241-EDS-DS-120".

[ ] 4.6. Install new fusible disconnect switch and adjust the mounting rack as needed to accommodate the larger switch.

[ ] 4.7. Rework the conduit and wire into the new switch.

[ ] 4.8. Install 90 AMP fuses. (See BOM)

[ ] 4.9. Open and close the switch to verify operation.

[ ] 4.10. Transfer the label from the old disconnect switch to the new switch or fabricate and install a new label.

[ ] 4.11. Remove Lockout/Tagout.

[ ] 4.12. Energize "AN241-EDS-DS-120" and perform a rotation check and Ensure the rotation is the same as step 4.5. If rotation is not correct, re-establish Lockout/Tagout and swap two leads and re-perform phase rotation.

Rotation_____ Should be the same as step 4.2

[ ] 4.13. Plug in power cord.

5.0 POST WORK ACTIVITY TESTING

[ ] 5.1. Was performed by work steps 4.9 and 4.12.

6.0 RESTORATION ACTIONS

[ ] 6.1. FWS ensure the job site has been cleaned up and all waste has been placed in the proper containers per Waste Planning Checklist and TO-100-052.

[ ] 6.2. Engineering Closeout review complete, ENSURE ECN-725995-R0 has been closed and a copy of the "MODIFICATION COMPLETE" cover page has been inserted into the Work Package.

_____ ___/___/___

Engineering Signature Date

Message

From: Brooks, Rocky L
Sent: Sunday, March 01, 2009 11:38 AM
To: Skaggs, Kristi A
Subject: WRPS-PER-2008-0167.6 Closure Information.doc
Attachments: WRPS-PER-2008-0167.6 Closure Information.doc

3/1/2009

Kristi,

WRPS-PER-2008-167.6

Please Close the subject PER based on the following information. The work order closure information completed the task required by this PER action.

CHAMPS (h0095655) (Tank Farms) (tfchamps)

File Edit Tools Window Help

Edit Work Order Steps

Work Order Id: TFC-WO-08-0277 Work Flow: WO Standard

Description: As a result of performing the Electrical Distribution System calculation RPP-CALC-24467, R.0 the folk

General | Trades | Materials | Assets | Cost | Completion

Step 001 State Closed Post ALARA Review Comp Date 00/00/0000

OPS Acceptance ☑ % Comp: 100 FWS Completed By: Saunders, Clyde H FWC Date: 01/16/2009

Failure Code: Asset Condition: Completed Satisfactorily: Yes

Remarks:

Cause Code	Description

Equip Effect: System Effect: Plant Effect:

Action Code	Action Code Description	Component	Comp?	Comments

Ready

Rocky Lee Brooks

241-AN, AP, SY and Transfer System Facility Manager

Persistence Pays in the End

Ph# 438-9442

Task# WRPS-PER-2008-0167.7

E-STARS[R] Report
Task Detail Report
07/08/2009 0928

TASK INFORMATION			
Task#	WRPS-PER-2008-0167.7		
Subject	WRPS-PER-2008-0167; RES; Perform work package WDL-110523. Deliverable: Copy of work record. Re		
Parent Task#	WRPS-PER-2008-0167	**Status**	Open
Reference	WRPS-PER-2008-0167	**Due**	07/15/2009
Originator	^PER CAs	**Priority**	Medium
Originator Phone		**Category**	PER
Origination Date	12/30/2008 0929	**Generic1**	None
Remote Task#		**Generic2**	None
Deliverable	PER Review	**Generic3**	None
Class	None	**View Permissions**	Global
Instructions	*No Instructions*		

ROUTING LISTS

1	Corrective Action	Active
	Perform work package WDL-110523. Deliverable: Copy of work record. Reference: Issue 8.5.3.2 AN Farm RESPONSIBLE MANAGER: When this corrective action is complete, enter a closure statement in E-STARS and close the E-STARS subtask. Refer to the Problem Evaluation Request procedure TFC-ESHQ-Q-C-C-01, Section 4.4 for closure documentation requirements	
	• Brooks, Rocky L - Assign - Completed with comments - 06/30/2009 1504 *Instructions:*	
	• Knight, Mark A - Review - Awaiting Response - Due Date - 07/12/2009 0000 *Instructions:*	

ATTACHMENTS

Attachments	1. DNFSB Electrical Letter Attachment.pdf 2. DNFSB Electrical Letter.pdf 3. Link to PER 4. RE_ WRPS-PER-2008-0167 _RES_.msg 5. Request to Extend WRPS-PER-2008-0167_2__4__7__22__31 _RES_.msg 6. Request to Extend WRPS-PER-2009-0167_2__4__7.msg 7. WRPS-PER-2008-0167 EVENT & CAUSAL FACTORING CHART.pdf 8. WRPS-PER-2008-0167.7 Work Record for WDL110523.pdf

COMMENTS

Poster	^PER Coordinator (Owen, Annette) - 04/24/2009 0708
	Due Date Extension
	Extend CA 7 to 5/25/09 per e-mail request. Work has begun in AN Farm but has been delayed in part due to issues with the electrical outage and farm ventilation system, and the need to support waste retrieval (C-104 to AN-101). Additional time is therefore required to complete these tasks. David Bragg
Poster	^PER Coordinator (Owen, Annette) - 05/28/2009 1557

Task# WRPS-PER-2008-0167.7

	Due Date Extension		
	Extend WRPS-PER-2008-0167.7 - Please assign a new due date of July 8, 2009. Work has been completed, however additional time is required to finish review and to complete/process paperwork. D Bragg		
Poster	Brooks, Rocky L (Judkins, Heather K) - 06/30/2009 1504		
	Corrective Action #7 Complete		
	Duelist WDL-110523 has been completed and a copy of the work record has been attached to the ESTARS task.		
Poster	Brooks, Rocky L (Judkins, Heather K) - 06/30/2009 1504		
	Completed		
	Duelist WDL-110523 has been completed and a copy of the work record has been attached to the ESTARS task.		
TASK DUE DATE HISTORY			
Modified	05/28/2009 1558 - ^PER Coordinator	**New Due Date**	07/08/2009 0000
Modified	04/24/2009 0709 - ^PER Coordinator	**New Due Date**	05/25/2009 0000
Modified	12/30/2008 0929 - ^PER CAs	**New Due Date**	03/18/2009 0000
Modified	12/30/2008 0929 - ^PER CAs	**New Due Date**	10/03/2009 0000
SUB TASK HISTORY			
No Subtasks			

-- end of report --

RPP WORK RECORD	Document Number: WFO-WO-08-0213

2. Work Item Title: 241-AN EDS-MCC-002 CLEAN & INSPECTION

Date	Turnover, Problem Description, Action Taken	Feed Back (X)	Name	Craft/ Resource Type	Hours
4/1/09	MEGGAR 817-45-45-016				
	DATE 06-JAN-09		STEEN/Hatfield	ELECT	
	DUE 06-JAN-10				
	A2-ON CD-ON				
	A3-ON C1-OFF				
	B1-OFF C3-OFF				
	B2-OFF C4-OFF				
	B3-ON C5-OFF				
	B4-ON C10-OFF				
4/5/09	HEATERS B2-1066, B3-1040,		STEEN		
	B4-1042, C2-1066				
	- C1 BREAKER is a CutterHammer				
	100 Amp				
	- C3 BreaKer is a Westinghouse				
	MARK 75, 15 Amp				
4-5-09	FIELD Work is Complete.		B Whitfield		
4-9-09	Lock & tag for this package				
	can be removed.		WA Brule		
05/11/09	POST-REVIEW COMPLETED SAT.		[illegible]	PLNG.	

Summary by Craft/Resource Type

Craft/Resource Type	Total Hours	Craft/Resource Type	Total Hours

KDB 5/11/09

A-6003-243 (11/04)

Message

From: Bragg, David A
Sent: Wednesday, December 31, 2008 9:46 AM
To: Owen, Annette
Cc: Nelson, Richard E; Roberts, Mark A
Subject: RE: WRPS-PER-2008-0167 (RES)

Annette,

Please add the following 5 new corrective actions. Thanks for your help.

David

New Corrective Action 1:

Ensure ECN in support of Work Package TFC-WO-08-2316 (to remove power from DACS Trailer) is released.
Deliverable: Electronic copy of released ECN.
Reference: Issue 8.1.4 SY Farm
Assign to Rick Nelson with Due Date of 05/07/09

New Corrective Action 2:

Ensure ECN in support of Work Package TFC-WO-08-2317 (to replace 200A breaker with 150 A breaker) is released.
Deliverable: Electronic copy of released ECN.
Reference: Issue 8.1.6 SY Farm
Assign to Rick Nelson with Due Date of 04/23/09

New Corrective Action 3:

Ensure ECN in support of Work Package TFC-WO-08-2318 (to replace 80A breaker EDS-DP-118 with a 40A breaker) is released.
Deliverable: Electronic copy of released ECN.
Reference: Issue 8.1.10 SY Farm
Assign to Rick Nelson with Due Date of 05/07/09

New Corrective Action 4:

Ensure ECN in support of MCC-E-001 breaker replacement is released OR provide justification of breaker acceptability.
Deliverable: Electronic copy of released ECN or written justification in comments section of corrective action to document breaker acceptability.
Reference: Issue 8.1.14 SY Farm
Assign to Rick Nelson with Due Date of 04/07/09

New Corrective Action 5:

Ensure ECN in support of Work Package TFC-WO-08-2319 (to replace 125A BKR-104 with a 100A breaker) is released.
Deliverable: Electronic copy of released ECN.
Reference: Issue 8.1.15 SY Farm
Assign to Rick Nelson with Due Date of 05/13/09

Message

From: Bragg, David A

Sent: Thursday, May 28, 2009 3:52 PM

To: ^WRPS Corrective Action Group

Cc: Knight, Mark A; Brooks, Rocky L; Owen, Annette

Subject: Request to Extend WRPS-PER-2008-0167.2/.4/.7/.22/.31 (RES)

Per direction of Mark Knight, please extend the following corrective actions:

WRPS-PER-2008-0167.2 - Please assign a new due date of July 8, 2009. Work has been completed, however additional time is required to finish review and to complete/process paperwork

WRPS-PER-2008-0167.4 - Please assign a new due date of July 8, 2009. Work has been completed, however additional time is required to finish review and to complete/process paperwork

WRPS-PER-2008-0167.7 - Please assign a new due date of July 8, 2009. Work has been completed, however additional time is required to finish review and to complete/process paperwork

WRPS-PER-2008-0167.22 - Please assign a new due date of August 18, 2009. Material (breakers) has been procured but not yet received. Additional time is required for material delivery and to perform fieldwork.

WRPS-PER-2008-0167.31 - Please assign a new due date of August 5, 2009. Work is dependant upon SY Farm outage schedule.

Thank you,

David Bragg
Base Operations Maintenance Engineering

Message

From: Bragg, David A

Sent: Thursday, April 23, 2009 11:43 AM

To: ^WRPS Corrective Action Group

Cc: Roberts, Mark A; Brooks, Rocky L

Subject: Request to Extend WRPS-PER-2009-0167.2/.4/.7

Per direction of Mark Roberts, acting for Mark Knight, please extend the following corrective actions;

WRPS-PER-2008-0167.2 to 05/25/09

WRPS-PER-2008-0167.4 to 05/25/09

WRPS-PER-2008-0167.7 to 05/25/09

Work has begun in AN Farm but has been delayed in part due to issues with the electrical outage and farm ventilation system, and the need to support waste retrieval (C-104 to AN-101). Additional time is therefore required to complete these tasks.

Thank you,

David Bragg
Base Operations Maintenance Engineering

Task# WRPS-PER-2008-0167.8

E-STARS[R] Report
Task Detail Report
07/08/2009 0932

TASK INFORMATION			
Task#	WRPS-PER-2008-0167.8		
Subject	WRPS-PER-2008-0167; RES; Prepare engineering technical evaluation for cable runs identified in Issue 8.5.3.6 (AN Farm). Deliverable: Electronic cop		
Parent Task#	WRPS-PER-2008-0167	**Status**	CLOSED 02/13/2009
Reference	WRPS-PER-2008-0167	**Due**	02/24/2009
Originator	^PER CAs	**Priority**	Medium
Originator Phone		**Category**	PER
Origination Date	12/30/2008 0929	**Generic1**	None
Remote Task#		**Generic2**	None
Deliverable	PER Review	**Generic3**	None
Class	None	**View Permissions**	Global
Instructions	*No Instructions*		

ROUTING LISTS

1	Corrective Action	Inactive
	Prepare engineering technical evaluation for cable runs identified in Issue 8.5.3.6 (AN Farm). Deliverable: Electronic copy of technical evaluation. Reference: Issue 8.5.3.6 AN Farm RESPONSIBLE MANAGER: When this corrective action is complete, enter a closure statement in E-STARS and close the E-STARS subtask. Refer to the Problem Evaluation Request procedure TFC-ESHQ-Q-C-C-01, Section 4.4 for closure documentation requirements	
	• Nelson, Rick E - Assign - Completed with comments - 02/13/2009 1315 *Instructions:*	
	• Knight, Mark A - Review - Concur with comments - 02/13/2009 1330 *Instructions:*	

ATTACHMENTS

Attachments	1. CH2M-PER-2008-0167.8 CLOSURE RPP-RPT-38265-R1.pdf 2. DNFSB Electrical Letter Attachment.pdf 3. DNFSB Electrical Letter.pdf 4. Link to PER 5. RE_ WRPS-PER-2008-0167 _RES_.msg 6. WRPS-PER-2008-0167 EVENT & CAUSAL FACTORING CHART.pdf

COMMENTS

Poster	Nelson, Rick E (Bragg, David A) - 02/13/2009 1315
Editor	Nelson, Rick E (Bragg, David A) - 02/13/2009 1327
	Completed
	The required technical evaluation is completed with the release of RPP-RPT-38265-R1, which is attached as objective evidence. This document addresses Issue 8.5.3.6 for AN Farm (see pages 8-9) as identified by corrective action CH2M-PER-2008-0167.8. No further action is required. The PER originator, while declining contact in the closure of the PER, was still involved in its final disposition, reviewing and approving the technical evaluation document, RPP-RPT-38265-R1.

Task# WRPS-PER-2008-0167.8			
Poster	Knight, Mark A (Bragg, David A) - 02/13/2009 1330		
	Concur		
	The required action is completed with the release of RPP-RPT-38265-R1. The PER originator was involved in the approval and release of this document. No further actions are needed.		
Poster	^PER CAs (Owen, Annette) - 02/13/2009 1456		
	CLOSED		
	Closure statement and attached documentation are adequate to close this action.		
TASK DUE DATE HISTORY			
Modified	12/30/2008 0929 - ^PER CAs	**New Due Date**	02/24/2009 0000
Modified	12/30/2008 0929 - ^PER CAs	**New Due Date**	10/03/2009 0000
SUB TASK HISTORY			
No Subtasks			

-- end of report --

CH2M HILL DOCUMENT RELEASE FORM

(1) Document Number:	RPP-RPT-38265	(2) Revision Number: 1	(3) Effective Date: 01/16/2009
(4) Document Type:	☐ Digital Image ☒ Hard copy ☐ PDF ☐ Video	(a) Number of pages (including the DRF) or number of digital images 63	
(5) Release Type	☐ New ☐ Cancel	☐ Page Change	☒ Complete Revision
(6) Document Title:	Tank Farm Electrical Distribution Studies Issue Status		
(7) Change/Release Description:	Updated to reflect the current status of resolution of the load studiy issues		
(8) Change Justification:	NA		

(9) Associated Structure, System, and Component (SSC) and Building Number:		
	(a) Structure Location: Double Shell Tank Farms	(c) Building Number: 241-AP, AW, AY, AZ, SY, C
	(b) System Designator: NA	(d) Equipment ID Number (EIN): NA

(10) Impacted Documents:	(a) Document Type	(b) Document Number	(c) Document Revision
	NA		

(11) Approvals:

(a) Author (Print/Sign): E.R. Hamm	ER Hamm	Date: 1/16/2009
(b) Responsible Manager (Print/Sign): M.A. Roberts	Mark Roberts	Date: 01/16/2009
(c) Reviewer (Optional, Print/Sign): R.E. Nelson	By Telephone ER Hamm	Date: 1/16/2009
(d) Reviewer (Optional, Print/Sign):		Date:

(12) Distribution:

(a) Name	(b) MSIN	(a) Name	(b) MSIN
M.J. Bryden	S5-07	G.J. Coleman	S7-24
E.R. Hamm	R2-58	E.A. Nelson	R2-58
R.E. Nelson	S5-07	M.A. Knight	S5-07
M.A. Roberts	S5-07		

Release Stamp

DATE: HANFORD RELEASE ID:
STA: 4
JAN 16 2009
2

(13) Clearance	(a) Cleared for Public Release	(b) Restricted Information?	(c) Restriction Type:
	☒ Yes ☐ No	☐ Yes ☒ No	

(14) Clearance Review (Print/Sign): L Fox GE Fox Date: 1-16-2009

A-6003-881 (05/05)

TANK FARM ELECTRICAL DISTRIBUTION STUDIES Issues Status

ER Hamm / RE Nelson
Washington River Protection Solutions, LLC.
Richland, WA 99352
U.S. Department of Energy Contract DE-AC27-08RV14800

EDT/ECN:	UC:
Cost Center:	Charge Code:
B&R Code:	Total Pages: 63

Key Words: National Electric Code (NEC), Demand Load, Load Flow, Voltage drop, Short Circuit, Protective Device Coordination, Equipment Evaluation, Arc Flash Evaluation, Engineering Evaluation, SKM, PTW

Abstract: This report is the basline eletrical power distribution system studies issues for 241-SY, 241-AW, 241-AP, 241-AY, AZ-701/702, C-109, 241-AZ, and 241-AN.

TRADEMARK DISCLAIMER. Reference herein to any specific commercial product, process, or service by trade name, trademark, manufacturer, or otherwise, does not necessarily constitute or imply its endorsement, recommendation, or favoring by the United States Government or any agency thereof or its contractors or subcontractors.

Release Approval	Date	Release Stamp

DATE: HANFORD RELEASE
STA: 4 ID:
JAN 16 2009

Approved For Public Release

Tank Farm Contractor (TFC) **RECORD OF REVISION**	(1) Document Number: **RPP-RPT-38265**	Page 1

(2) Title:

Tank Farms Electrical Distribution Studies Issues Status

Change Control Record

(3) Revision	(4) Description of Change – Replace, Add, and Delete Pages	Authorized for Release	
		(5) Resp. Engr. (print/sign/date)	(6) Resp. Mgr. (print/sign/date)
1 **RS**	Updated to reflect the current status of resolution of the load study status	ER Hamm ER Hamm 1/16/2009	MA Roberts See DRF ER Hamm 1/16/2009

TABLE OF CONTENTS

1.0 PURPOSE 1
2.0 SCOPE 1
3.0 SUMMARY OF ELECTRICAL LOAD STUDIES ISSUE STATUS 1
4.0 SOFTWARE VERIFICATION AND VALIDATION (V&V) 2
5.0 AN TANK FARM 3
6.0 AP TANK FARM 14
7.0 AW TANK FARM 21
8.0 AY TANK FARM 30
9.0 AZ 701/702 FACILITIES 37
10.0 AZ TANK FARM 39
11.0 C-109 RETRIEVAL PROJECT 41
12.0 SY TANK FARM 43

LIST OF TABLES

Table 1. Summary Status of Distribution Studies Issues 1
Table 2. Software Verification and Validation 2

LIST OF TERMS

FFS	Fluor Federal Services
HP	Horse Power
FLA	Full Load Amperes
NEC	National Electrical Code
PPE	Personal Protective Equipment
PTW	Power*Tools for Windows

1.0 PURPOSE

The purpose of this report is to provide a list of the Tank Farm Electrical Load Studies and track the status and the basis for closure of each issue. The document will be revised as new load studies are performed and issues are closed out.

This document was initiated following a DNFSB review of the Double Shell Tank Farm Electrical System in June 2008.

2.0 SCOPE

Double Shell Tank Farm electrical load study calculations as noted in Table 1. The status and basis for closure for issues identified in electrical load studies for other Tank Farm facilities will be included the next revision of this document.

3.0 SUMMARY OF ELECTRICAL LOAD STUDIES ISSUE STATUS

Table 1. Summary Status of Distribution Studies Issues

	Facility	Calculation Number	Number of Issues	Number Resolved	Number Requiring Field Work	Number Requiring Document Change ECNs
1	AN	RPP-CALC-24467 R.0	12	8	4	0
2	AP	RPP-8182 R. 0	8	2	4	2
3	AW	RPP-8183 R.1	11	7	3	1
4	AY	RPP-CALC-24468 R.0	11	7	4	0
5	701/702	RPP-CALC-24466 R.0	0	0	0	0
6	AZ	RPP-CALC-24465 R.0	0	0	0	0
7	C-109	RPP-CALC-32223 R.0	0	0	0	0
8	SY	RPP-8185 R.0	33	23	10	0
	Totals		75	47	25	3

4.0 SOFTWARE VERIFICATION AND VALIDATION (V&V)

The Software verification and Validation (V&V) table provides the SKM Power Tools for Windows* Software Version and the referenced V&V documentation for each electrical load study.

Table 2. Software Verification and Validation

	Contractor	Calculation Number	Software Used	Software Version Number	V&V Document Number	Comments
1	Fluor Federal Services	RPP-8182 R. 0	SKM Power*Tools	3.8.1.0 Build 2 Version 4.0.0.0 Beta 6	RPP-9886 Rev. 0	RPP-9886 covers PTW Software versions 3.8.1.0 through 4.0.2.3 (build 1)
2	Fluor Federal Services	RPP-8183 R.1	SKM Power*Tools	5.0.2.8 Build 2	HNF-26563 Rev. 0	
3	Fluor Federal Services	RPP-8185 R.0	SKM Power*Tools	3.8.1.0 Build 2 4.0.2.6 Build 1	RPP-9886 Rev. 0	RPP-9886 covers PTW Software versions 3.8.1.0 through 4.0.2.3 (build 1)
4	Fluor Federal Services	RPP-CALC-24465 R.0	SKM Power*Tools	5.0.2.8 Build 2	HNF-19648, Rev.0 RPP-9886, Rev.0 HNF-26563 Rev. 0	RPP-9886 covers PTW Software versions 3.8.1.0 through 4.0.2.3 (build 1)
5	Fluor Federal Services	RPP-CALC-24466 R.0	SKM Power*Tools	5.03.0 Build 1	HNF-19648, Rev.0 RPP-9886, Rev.0 HNF-26563 Rev. 0	RPP-9886 covers PTW Software versions 3.8.1.0 through 4.0.2.3 (build 1)
6	Fluor Federal Services	RPP-CALC-24467 R.0	SKM Power*Tools	5.0.2.8 Build 2	HNF-19648, Rev.0 RPP-9886, Rev.0 HNF-26563 Rev. 0	RPP-9886 covers PTW Software versions 3.8.1.0 through 4.0.2.3 (build 1)
7	Fluor Federal Services	RPP-CALC-24468 R.0	SKM Power*Tools	5.0.2.8 Build 2	HNF-19648, Rev.0 RPP-9886, Rev.0 HNF-26563 Rev. 0	RPP-9886 covers PTW Software versions 3.8.1.0 through 4.0.2.3 (build 1)
8	ARES Corporation	RPP-CALC-32223 R.0	SKM Power*Tools	Version 6.0.2.8	VV-07-07-004	

5.0 AN TANK FARM

Document Number	Release Date	SKM/PTW Version	NEC Code	Contractor
RPP-CALC-24467 Rev 0	06/21/2005	5.0.2.8 Build 2	2002	FFS

	Electrical Study Section	Total Issues	Open Issues Requiring Field Work	Open Issues Requiring a Document Change ECN	Issues Resolved
1	NEC Issues	3	0	0	3
2	Demand Load Study	0	0	0	0
3	Load Flow and Voltage drop Study	1	1	0	0
4	Short Circuit Study	2	2	0	0
5	Protective Device Coordination	4	1	0	3
6	Equipment Evaluation Report	2	0	0	2
7	Arc Flash Evaluation Study	0	0	0	0
	Total	12	4	0	8

AN TANK FARMS

Issue #	National Electric Code (NEC) Issues	Recommendations	Status	Comment
8.1.1	Supernatant pump AN06A-WT-P-016 has a 25 HP motor. The NEC FLA for a 25 HP motor is 34A. The motor branch circuit conductors are shown as #8 AWG. The NEC rated ampacity for #8 conductors is 40A @ 60 deg. C (Table 310.16). NEC article 430.22 requires that the motor conductors be rated at 125% of the motor FLA (34 x 1.25 = 42.5A). The 60 deg. C ampacity of the #8 conductors is inadequate for the 40HP motor.	1) Verify conductor termination and equipment is rated for 75 deg. C (50A ampacity of # 8 conductors); or 2) Replace the #8 motor circuit conductors with #6 AWG conductors (55A).	Resolved	The cabinet is compliant with UL-508A, "Industrial Control Panel" Section 29.6(a), internal wiring sizing. This section use 100% FLA for sizing the wires. The Field wiring from the MCC terminal strip to the load is #6 AWG which is good for 55Amp. The field installation is NEC compliant. No further action required ECN-723859, Rev.0 changed Drawing H-14-030001, sh.2 to show #6AWG connected to AN06A-WT-P-016 Reference: H-14-030001, sh.2, R.13
8.1.2	Annulus exhaust fan AN241-VTA-EF-003 is shown as 10 HP. The NEC FLA for a 10 HP motor is 14A. NEC article table 430.52 requires that the maximum trip rating of a breaker supplying a single motor be 250% of the FLA (14 x 2.5 = 35A), unless that breaker does not permit the motor to start. Therefore, unless there is a historical starting problem, breaker BKR-118 (50A) is in violation of the NEC.	Replace BKR-118 with a breaker rated at 35A, maximum.	Resolved	The field configuration indicated the breaker is 30A breaker. Drawing H-14-030001, sh.3, R.6 have been changed by ECN-723859, R.0 to reflect field configuration Reference: H-14-030001, Sh.3, Rev.6 PER 2005-2613 and ECN: 723859 Rev.0
8.1.3	Building AN273 coolant pump control panel AN273-GLY-CP-101 is supplied from fused disconnect switch AN273-GLY-DS-101. One line diagram H-14-030001 Sh. 2 Rev 10 and elementary diagram H-14-030301 Sh. 1 Rev 1 indicate 30A fuses in the switch. Plan drawing H-2-93194 Sh. 1 Rev 1 indicates #12 conductors on the load side of disconnect switch. The 30A fuses do not provide adequate over current protection (20A) for the #12 conductors in accordance with NEC 240.4.D. And the 30A fuses exceed the over current protection allowed by NEC 430.62.	Verify conductor size. If conductors are #12, replace fuses with 20A units.	Resolved	The field configuration indicated that 15A fuses are installed, the 15A fuses provide adequate over current protection for #12 conductors Reference: H-14-030001. sh.2, Rev.13 PER 2005-2613 ECN: 723859 Rev.0.

AN TANK FARMS

Issue #	Demand Load Issues	Recommendations	Status	Comment
NA	NA	NA	NA	NA

Issue #	Load Flow & Voltage Drop Issues	Recommendations	Status	Comment
8.3.4	The voltage drop calculation indicates the following bus voltage drops exceed the ANSI C84.1 limits (8.3% voltage drop) with 480V maintained at the utility transformer secondary bus: Bus Voltage Drops > 8.3% (480V Assumed at Utility Transformer Secondary Bus) Component Name: High Phase Voltage Drop (%): Comment BUS-DP-105: 9.48: Verify loads on DP-105 XFMR-102-SEC: 9.41:	NA	Field Work Required	Power to the SHIMS cabinets has been removed (Breakers Opened) , thereby reducing the calculated voltage drop from 9.48% to 4.79%. ECN -725722 R.0 has been prepared to lift leads and de-energize DP-105 References: H-14-030001, Sh.1, Rev. 13 H-14-030001, Sh.11, Rev.9 ECN-725722, Rev.0

Issue #	Short Circuit Study Issues	Recommendations	Status	Comment
8.4.4	Disconnect switch AN273-EDS-DS-112 is non-fused. The nominal short circuit rating for a non-fused disconnect switch is 10kA. The calculated short circuit current at the switch location is approximately 15.6 kA.	Fused disconnect switches assume the short circuit ratings of the installed fuse. Replace DS-112 with a 100A fused disconnect switch with 90A fuses suitable for the available short circuit current.	Field Work Required	Change the switch from a non-fused to a fused switch. Work Package TFC-WO-08-0276 ECN ECN-725990-R0 - -Released Work package is Ready To Work Reference: H-14-030001, Sh.2, Rev.13

AN TANK FARMS

<table>
<tr><th>Issue #</th><th>Short Circuit Study Issues</th><th>Recommendations</th><th>Status</th><th>Comment</th></tr>
<tr>
<td>8.4.5</td>
<td>Disconnect switch AN241-EDS-DS-120 is non-fused. The nominal short circuit rating for a non-fused disconnect switch is 10kA. The calculated short circuit current at the switch location is approximately 15.8 kA.
<table>
<tr><th colspan="2">Switch</th><th colspan="2">Fuse</th><th rowspan="2">Calculated Short Circuit Current (kA)</th><th rowspan="2">Comment</th></tr>
<tr><th>PTW Name</th><th>PTW Name</th><th>Rating (kA)</th></tr>
<tr><td>DS-100</td><td>FU-DS-100</td><td>10</td><td>18.5</td><td>Assumed Fuse Type (Bussmann RES). Verify.</td></tr>
<tr><td>DS-113</td><td>FU-DS-113</td><td>10</td><td>15.6</td><td>Assumed Fuse Type (Bussmann RES). Verify.</td></tr>
<tr><td>DS-127</td><td>FU-DS-127</td><td>200</td><td>17.9</td><td>Assumed Fuse Type (Bussmann FRS). Verify.</td></tr>
<tr><td>VT-DS-101</td><td>FU-VT-DS-101</td><td>10</td><td>15.6</td><td>Assumed Fuse Type (Bussmann RES). Verify.</td></tr>
</table>
</td>
<td>Fused disconnect switches assume the short circuit ratings of the installed fuse. Replace DS-120 with a 100A fused disconnect switch with 100A fuses suitable for the available short circuit current.

Numerous other disconnect switches are noted in the PTW Equipment Evaluation report to be applied beyond their short circuit rating. This evaluation is based upon the non-fused rating (10kA) of the switch. However, the short circuit rating of a fused-disconnect switch is that of the fuse, and in some cases, a non-fused disconnect switch may be protected by an upstream fuse. For each of the fused disconnect switches applied at a location with short circuit current greater than 10kA, fuse ratings must evaluated to determine adequacy of the fused switch. All fused switches in this study are adequately protected by their fuses with exception of those in the following table. Lacking specific information for these fuses, assumed fuse types were utilized. Actual installed fuse types should be determined and evaluated for suitability considering the available short circuit current.</td>
<td>Field Work Required</td>
<td>Change the switch from a non-fused to a fused switch.
Work package TFC-WO-08-0277
ECN-725995-R0-- Released
Work package is Ready To Work
Reference:
H-14-030001, Sh.2, Rev.13
H-14-030001, Sh.1, Rev.24</td>
</tr>
</table>

AN TANK FARMS

Issue #	Protective Device Coordination Issues	Recommendations	Status	Comment
8.5.3.1	General – Circuit breakers with instantaneous trip characteristics with no intentional delay may not achieve selective coordination with other nearby instantaneous trip devices. This situation is commonly found at a panel or motor control center with thermal-magnetic main and feeder circuit breakers. Short circuits on the feeders with sufficient available fault current may trip the main breaker. This situation is found in the system of this study at MCC-001, MCC-002, DP-103, for example.	NA	NA	NA
8.5.3.2	MCC-001 feeder fuse FU-DS-127 (400A) does not coordinate with existing settings of MCC-001 main breaker BKR-101 for feeder overcurrents above approximately 2kA (Ref. TCC MCC-001 in Appendix E). Overcurrents greater than 2kA on the feeder supplying DP-130 and the exhauster skids will trip the MCC-001 main breaker. Short circuit current at DP-130 exceeds 9kA.	1) Raise the short time pickup setting of BKR-101 to its maximum setting of 8x (8000A). This will provide improved coordination up to approx 7kA. A STPU setting of 5x (5000A) or greater on BKR-101 will miscoordinate with the existing STPU setting (4800A) of upstream breaker BKR-100, so BKR-100 STPU would have to be raised to at least 8x (9600A)(Ref. TCC DP-130-MAIN(1) in Appendix E); or 2) Replace the 400A fuse with a circuit breaker with characteristics more closely matching the upstream breakers (Ref. TCC DP-130-MAIN (2) in Appendix E).	Field Work Required F5.1	Update the trip settings for BKR 100 and 101. Reference: H-14-030001, Sh.1, Rev.24 PM# WDL-110-523 Work Package is Ready To Work?
8.5.3.3	Panel DP-130 main breaker does not selectively coordinate with upstream fuse FU-DS-127 nor the MCC-001 main breaker BKR-101 for overcurrents greater than approximately 2kA (Ref. TCC DP-130-MAIN in Appendix E). See also 0 above.	Raise the short time pickup setting of BKR-101 to at least 3x (3000A) to provide coordination with the DP-130 main breaker.	Resolved	Same breaker as 8.5.3.2. BKR 101 will be set to 8000 amps which is well above the recommended 3000 amp. See 8.5.3.2 above

AN TANK FARMS

<table>
<tr><th>Issue #</th><th>Protective Device Coordination Issues</th><th>Recommendations</th><th>Status</th><th>Comment</th></tr>
<tr><td>8.5.3.4</td><td>Fuse FU-DS-117 in disconnect switch DS-117 does not selectively coordinate with MCC-001 main breaker BKR-101 for overcurrents greater than approximately 2kA (Ref. TCC DS-117 in Appendix E). The short time pickup setting (2000A) of BKR-101 does not allow coordination with the 200A feeder fuse.</td><td>Raise the short time pickup setting of breaker BKR-101 to at least 4kA. See also 0 above.</td><td>Resolved</td><td>Same breaker as 8.5.3.2.
BKR 101 will be set to 8000 amps which is well above the recommended 3000 amp.
See 8.5.3.2 above</td></tr>
<tr><td>8.5.3.5</td><td>Where identical branch circuits are protected by the same device, a TCC was generated for only one.</td><td>NA</td><td>NA</td><td>NA</td></tr>
<tr><td>8.5.3.6</td><td>Although they meet the NEC requirements for overcurrent protection, comparison of the cable thermal damage curve with the time-current characteristics of the upstream protective device indicates the following cables may not be adequately protected from damage throughout the entire range of overcurrent from overloads to short circuits. Cable damage temperature is assumed to be 150 deg. C with an initial operating temperature of 75 deg. C. Field verification of installed cable insulation type may be warranted.
<table>
<tr><th></th><th>Cable Name</th><th>Reference TCC</th><th>Wire Size</th><th>Protective Device (Upstream)</th><th>Comment</th></tr>
<tr><td>1</td><td>CBL-BKR-105LD</td><td>BKR-105</td><td>10</td><td>BKR-105
C-H HFD 30A</td><td></td></tr>
<tr><td>2</td><td>WR82</td><td>BKR-118</td><td>10</td><td>BKR-118
C-H HFD 50A</td><td>Motor Circuit</td></tr>
<tr><td>3</td><td>WR85</td><td>BKR-121</td><td>12</td><td>BKR-121
C-H HFD 15A</td><td></td></tr>
<tr><td>4</td><td>WR87</td><td>BKR-122</td><td>12</td><td>BKR-122
C-H HFD 20A</td><td></td></tr>
<tr><td>5</td><td>WR228</td><td>BKR-123</td><td>12</td><td>BKR-123
C-H HFD 15A</td><td></td></tr>
<tr><td>6</td><td>WR229</td><td>BKR-124</td><td>12</td><td>BKR-124
C-H HFD 15A</td><td></td></tr>
</table></td><td>NA</td><td>Resolved</td><td>A field walkdown and inspection was performed and determined that conductor insulation in all circuits is rated for 90 deg. C and wire sizing was consistent with recommended ampacities per NEC 2008 table 310.16.
There was no indication of excessive heat or discoloration on the wire insulation or terminations.
Annual preventive maintenance is performed on the Motor Control Center (MCC) that provides power for these branch circuits. This preventive maintenance program performs a check of the tightness of all connection along with a visual inspection of each of the individual conductors for signs of deterioration, heat, discoloration of conductors.
Reference:
SKM System Analysis Inc.</td></tr>
</table>

AN TANK FARMS

Issue #	Protective Device Coordination Issues						Recommendations	Status	Comment
	7	WR572	BKR-130	10	BKR-130 C-H HFD 30A				purpose and guidelines for basic over current protection philosophy for insulated power cables IEEE 242-2001 chapter 9 Cable ProtectionH-14-030001, Sh.1, Rev.24 H-14-030001, Sh.2, Rev.13 H-14-030001, Sh.3, Rev.6
	8	CBL-BKR-351	BKR-350	8	BKR-350 Sq-D FA 100A	Tap Conductor, downstream protection.			
	9	CBL-BKR-451	BKR-450	8	BKR-450 Sq-D FA 100A	Tap Conductor, downstream protection.			
	10	WR138	DP-103-13	12	DP-103-13 C-H FD 20A				
	11	WR139	DP-103-14	12	DP-103-14 C-H FD 20A				
	12	CBL-DS-111	DP-104	12	DP-103-37 C-H FD 15A				
	13	WR93	DP-107-11	12	BKR-DP107-11 C-H HFD 20A				
	14	WR94	DP-107-12	12	BKR-DP107-12 C-H HFD 20A				
	15	WR00-76	DP-112	8	BKR-132 C-H HFD 100A	Not NEC compliant if tap > 25 ft length. Verify tap conductor length.			
	16	WR210-E	DP-129-MAIN	6	DP-130-6 Sq-D FC 40A	Tap conductor, downstream protection.			

AN TANK FARMS

Issue #	Equipment Evaluation Issues	Recommendations	Status	Comment
8.6.1.2	Protective equipment evaluation based upon load flow current indicates the following protective equipment is applied beyond its continuous current rating:	NA	Resolved	The active loads for these devices are well below the calculated values shown in the table, and below the Ampere Interrupt Capability rating for the protective devices. This condition is considered acceptable.

Protective Device Evaluation Continuous Current Ratings Exceeded

	Component Name	Rating Exceeded	Comment
1	BKR-106	365A > 225A rating	DP-103 Feeder Breaker
2	C8X713	1.27A > 1A rating	Utility Transformer Primary Fuse.
3	DP-103-MAIN	365A > 225A rating	Verify DP-103 loads reported on H-14-030001 Sh. 9 rev 4.
4	(Breaker) DP-103-1	21A > 20A rating	Floodlights, poles 1,2,3,7. Loads per panel schedule drawing H-14-030001 Sh. 9 rev 4. Verify reported loads.
5	FU-DS-103	18A > 15A rating	Pole 1-7 Flood Light Circuits. Loads per panel schedule drawing H-14-030001 Sh. 9 rev 4. Verify reported loads.
6	FU-DS-104	18A > 15A rating	
7	FU-DS-105	18A > 15A rating	
8	FU-DS-106	18A > 15A rating	
9	FU-DS-107	18A > 15A rating	
10	FU-DS-108	18A > 15A rating	
11	FU-DS-118	18A > 15A rating	
12	(Breaker) DP-103-13	23A > 20A rating	Impact Wrench Station #1. Load per panel schedule drawing H-14-030001 Sh. 9 rev 4. Verify reported load.
13	FU-DS-109	23A > 15A rating	
14	(Breaker) DP-103-14	23.6A > 20A rating	Impact Wrench Station #2. Load per panel schedule drawing H-14-030001 Sh. 9 rev 4. Verify reported load.
15	FU-DS-110	23.6A > 15A rating	
16	(Breaker) DP-103-8	70.4A > 60A rating	Load per panel schedule drawing H-14-030001 Sh. 9 rev 4. Verify reported load.

AN TANK FARMS

Issue #	Equipment Evaluation Issues	Recommendations	Status	Comment
8.6.2.1	Non-Protective equipment evaluation based upon load flow current indicates the following equipment is applied beyond its continuous current rating:	NA	Resolved	The calculated load values do not consider demand or diversity factors and the measured loads for this distribution system is significantly lower that the calculated values.

Non Protective Device Equipment Evaluation, Continuous Current Ratings Exceeded

	Device	Criteria Failure	Comment
1	CBL-DP-107	55.4A > 55A Ampacity	Verify Panel DP-107 loads.
2	CBL-SA-CMP-001	42.5A > 40A Ampacity	25 HP motor, NEC FLA = 34A, 125% FLA minimum circuit ampacity = 42.5A. #8 @ 60 deg C ampacity of 40A is insufficient for motor.
3	WR137	70A > 55A Ampacity	
4	WR138	23A > 20A Ampacity	Impact Wrench Station #1 feeder. See 8.6.1.2.
5	WR139	23.6A > 20A Ampacity	Impact Wrench Station #2 feeder. See 8.6.1.2.
6	WR8	363A > 230A Ampacity	DP-103 feeder. See 8.6.1.2.
7	XFMR-102	84A > 78A rating	37.5kVA FLA = 78.1A. DP-105 feeder circuit. Verify DP-105 loads.
8	XFMR-105	23.5A > 20.8A rating	10kVA FLA = 20.8A. DP-107 feeder circuit. Verify DP-107 loads.
9	XFMR-351	23A > 20.8A rating	10kVA FLA = 20.8A. VT-DP-351 feeder circuit. Verify VTP-DP-351 loads.
10	XFMR-451	23A > 20.8A rating	10kVA FLA = 20.8A. VT-DP-341 feeder circuit. Verify VTP-DP-341 loads.
11	XFMR-C6032L	1.27A > 0.7A rating	10kVA Utility Transformer
12	DP-103 Ckt. 1	21A > 20A rating	Loads per panel schedule drawing H-14-030001 Sh. 9 rev 4. Verify reported load.
13	DP-103 Ckt. 7	66.7A > 60A rating	
14	DP-103 Ckt. 8	66.7A > 60A rating	
15	DP-103 Ckt. 13	23A > 20A rating	

AN TANK FARMS

Issue #	Equipment Evaluation Issues				Recommendations	Status	Comment
	16	DP-103 Ckt. 14	23.6A > 20A rating				
	17	DP-103 Ckt. 26	66.7A > 60A rating				
	18	DP-111 Ckt. 2	33A > 20A rating	Load per panel schedule drawing H-14-030001 Sh. 21 rev 0. Verify reported load.			
	19	DP-112 Ckt. 2	33A > 20A rating	Load per panel schedule drawing H-14-030001 Sh. 22 rev 0. Verify reported load.			

Issue #	Arc Flash Evaluation Study	Recommendations	Status	Comment
8.7.5	The Arc Flash Evaluation indicates all evaluated fault locations in the distribution system produce arc flash incident energy values below 1.2 cal/cm^2 (PPE Class 0) except for the following:	NA	NA	No Actions Necessary

Arc Flash Incident Energy > 1.2 cal/cm^2			
Bus Fault Location	Incident Energy (cal/cm^2)	PPE Class	Comment
BUS-ENCL-100	44.7	Dangerous!!!	Secondary fault cleared by primary fuse.
BUS-GLY-PS-101	19	Class 3	
BUS-WT-P-010	3.28	Class 1	
EDS-MCC-001	3.25	Class 1	
BUS-WT-P-013	2.19	Class 1	
HH-29	1.96	Class 1	
LINE C8-L6	1.84	Class 1	
BUS-DS-127	1.83	Class 1	
BUS-WT-P-005	1.71	Class 1	

AN TANK FARMS

Issue #	Arc Flash Evaluation Study				Recommendations	Status	Comment
	BUS-WT-P-014	1.71	Class 1				
	BUS-WT-P-001	1.56	Class 1				
	BUS-P-101-1A	1.48	Class 1				
	BUS-DS-124	1.44	Class 1				
	BUS-P-101-1	1.36	Class 1				
	BUS-WT-P-020	1.24	Class 1				
	Line Side Fault Location						
	EDS-MCC-001 (BKR-101)	11.9	Class 3				
	BUS-DP-130 (DP-130-MAIN)	3.3	Class 1				

6.0 AP TANK FARM

Document Number	Release Date	SKM/PTW Version	NEC Code	Contractor
RPP-8182 Rev 0	08/20/2001	3.8.1.0 Build 2 Version 4.0.0.0 Beta 6	1999	FFS

	Electrical Study Section	Total Issues	Open Issues Requiring Field Work	Open Issues Requiring Document Change ECN	Issues Resolved
1	NEC Issues	7	3	2	2
2	Demand Load Study	0	0	0	0
3	Load Flow and Voltage drop Study	0	0	0	0
4	Short Circuit Study	0	0	0	0
5	Protective Device Coordination	1	1	0	0
6	Equipment Evaluation Report	0	0	0	0
7	Arc Flash Evaluation Study	0	0	0	0
	Total	8	4	2	2

AP TANK FARM

Issue #	National Electric Code (NEC) Issues	Recommendations	Status	Comment
8.1.1	Panel EDS-DP-101 has no main breaker, and is supplied by conductors from the secondary of transformer XFMR-101, without intervening overcurrent protection. There is no overcurrent protection for the secondary conductors as required by NEC Article 240-21(c). Note, the transformer primary overcurrent device provides transformer protection in accordance with NEC Article 450-3(6), however, required secondary conductor overcurrent protection does not exist.	Install secondary conductor overcurrent protection (fuses or circuit breaker, 110A maximum) between transformer and panelboard.	Resolved	Breaker has been installed per ECN 724298 Rev.0 Reference: H-14-030003 Sh 2 ECN724298
8.1.2	Primary supply circuit for XFMR-104, fed from MCC-002 circuit breaker BKR-136 is #12 copper conductor, MTW/THW. The ampacity of #12 conductor, is 25A (@ 60 & 75 degrees C) per NEC Table 310-16, but additionally are limited to a maximum 20A overcurrent device per NEC 240-3, The 30A circuit breaker BKR-136 does not provide adequate overcurrent protection for the #12 conductors.	Change existing 30A circuit breaker BKR-136 to be a 20A circuit breaker.	Field Work Required	ECN-726001-R0 is in development. PER-2008-167AP241-EDS-DP-110 has a total load of 8640W per H-14-030003, SH.16. The 8640w load equates to a 18A on the primary conductor. The #12 wire is rated for 20A. There is no immediate hazard but the circuit is not NEC compliant. Replace # 12 wire with #10 Reference: NEC-240-4(d) H-14-030003 Sh. 17, R-2 H-14-030003 Sh. 18, R-2 H-14-030003 Sh. 3, R-11
8.1.3	The feeder circuit breaker BKR-113 in motor control center MCC-001 does not provide adequate overcurrent protection for a portion of the feeders supplying rectifier disconnect switches CATH-DS-100 and CATH-DS-101. Feeders originating from circuit breaker BKR-113 are reported to #10 AWG out to the location of the disconnect switches, but are spliced to #12 AWG conductors prior to terminating	NA	Engineering Document Change (ECN) Required	Tap rules per NEC-240.21(b)(1) apply, the installation is NEC compliance. No further action required. An Engineering Change Notice is required to show this configuration on the drawing Reference NEC-240.21

AP TANK FARM

Issue #	National Electric Code (NEC) Issues	Recommendations	Status	Comment
	at the line side of the disconnect switches. The maximum allowable overcurrent protection of #12 conductors is 20A (NEC 240-3(d)). BKR-113 is has a 30A trip rating. The #12 conductors are not adequately protected. However, considering exception allowed by NEC 240-21(b) (1), (feeder taps are not over 10 ft.) the installation is NEC compliant.			H-14-030003, Sh.2
8.1.4	The calculated load of EDS-DP-1 04, based upon assumed assigned load and diversity for the receptacle branch circuits, exceeds the ampacity of the incoming feeder conductors, as well as the rating of the incoming feeder breaker. However, the incoming feeder is adequately protected against overcurrent by the feeder breaker BKR-1 17. The assumed loads assigned to the panel branch circuits by this study may be unrealistically excessive. Note: Assumption 6.11, indicates that 4 out of 5 welding receptacles are loaded at 40kw each.	Limit allowable and actual panelboard loading to a maximum of 190 kVA and 230A per phase. Calculated and allowable panelboard loads can be reduced by control of Individual loads, and/or limiting simultaneous use of available receptacles in panelboard EDS-DP-104.	Field Work Required	The configuration in NEC compliant, installation of a main breaker in panel 104 is recommended to improve selective breaker coordination. Work Order WO-08-2309 has been prepared. ECN-725942-R0 Is being Developed. Reference: H-14-03003 Sh1
8.1.5	The calculated design load flow current (31A) on the glycol chiller feeder on the load side of disconnect switch AP273-GLY-DS-1 01 exceeds the ampacity (30A) of the #10AWG feeder conductors. However, calculated load flow current was based upon the loads given by the panel schedule drawing for panel AP273-EDS-DP-108. Examination of the loads assigned by the panel schedule, however, indicates actual loads may be less. The one line diagram indicates the chiller load includes a 10 HP compressor motor, and two 3/4 HP fans. NEC full load amps for these motors is: 14, 1.6, and 1 .6 Amps respectively. Considering 125% of the largest motor, this is a 20.7A load, which equates to 17.2 kVA and 13.8 kW at 80% pf. The panel schedule for this load indicates a 20 kW load. The existing conductors are	Conductor ampacity based upon calculated load using motor ratings as given on one line diagrams is in compliance with NEC. Verify load values on panel schedule EDS-DP-1 08 for Glycol Chiller (Ckt. 1).	Field Work Required	Walkdown is complete. Need to lift lead for Glycol system to remove the loading on Panel DP-108 ECN-726031-R0 has been Released Work Package TFC-08-2656 has been prepared. Ref: H-14-030003 Sh. 2, R-13

AP TANK FARM

Issue #	National Electric Code (NEC) Issues	Recommendations	Status	Comment
	adequate for the 20.7A load of the three motors, calculated based upon nominal HP rating indicated on one line diagram, and NEC FLA.			
8.1.6	Size of conductors supplying panel AP271-EDS-DP-105 from circuit 32 of AP271-EDS-DP-104 could not be verified during last field walk down (outage required). Documentation depicting the installation of the feeder conductors (and the panel) could not be located. The walk down did, however, verify the rating of the feeder breaker in panel AP271-EDS-DP-104 to be 100A. A #1/0 AWG minimum size conductor is required to carry the calculated load flow for the existing panel DP-1 05 loads. The feeder in this study is represented by #1/0 conductors. While no specific code violation can be noted, based upon the rating (100A) of the feeder breaker in panel AP271-EDS-DP-104, the minimum size of the feeder conductors allowed by code is #1/0 AWG Copper THHN.	Verify size of conductors supplying panel DP-105 to be at least #1/0 AWG.	Engineering Document Change ECN Required	A walk down was performed on 10/6/2008, the conductors from AP271-EDS-DP-104 to panel AP271-EDS-DP-105 is #1 AWG which has an ampacity of 110 A @ 60 degrees C, no NEC violation exists. A document change ECN is required to show the wire size on the drawing. Ref: H-14-030003, Sh.2, Rev.13
8.1.7	Circuit breakers in panel AP241-EDS-DP-110 are mounted in two rows, and oriented in a vertical position. Half of the breakers are arranged such that the UP position of the handle is the "ON" position of the breaker. This is a violation of NEC article 240-81.	Rearrange / replace panel such that breaker handles are operated in horizontal plane, or, use as is with facility management acceptance and approval.	Resolved	The As-Built drawings for the AP Tank Farm were released between 1982 and 1986. The NEC requirement (article 240.81) was not incorporated until the 1987 NEC. These breakers provide overcurrent protection and are operated during facility operation. The qualified electrical workers are familiar with the configuration. Therefore, this configuration considered acceptable.

AP TANK FARM

Issue #	**Demand Load Study Issues**	**Recommendations**	**Status**	**Comment**
NA	NA	NA	NA	NA

Issue #	**Load Flow & voltage Drop Study Issues**	**Recommendations**	**Status**	**Comment**
NA	NA	NA	NA	NA

Issue #	**Short Circuit Study Issues**	**Recommendations**	**Status**	**Comment**
NA	NA	NA	NA	NA

Issue #	**Protective Device Coordination Issues**	**Recommendations**	**Status**	**Comment**
8.5.4	Where existing protective device coordination could be improved using existing equipment, recommended setting changes are provided and summarized in the following Table.	Update Breaker Trip Settings.	Field Work Required	1) BKR 101 trip unit was changed from Amptector I-A Model LIG to Digitrip 910 LIG. The new trip unit is set to the maximum value on the LTD and to 8X on the INST. The vendor curve was used to set the breaker trip settings comparable with recommended trip settings shown in the table. 2) BKR 103 and BKR 116 need to be adjusted during the performance of the MCC Breaker PM. PM# WDL-110917 Prepared

Circuit Breaker Trip Settings, Summary

Breaker	Existing Setting				Recommended Setting			
	LTPU	LTD	STPU	INST	LTPU	LTD	STPU	INST
BKR-101	0.9	4	NA	10	1	28	NA	10
BKR-103	1	Fixed	8	NA	1	Fixed	5	NA
BKR-116	Fixed	Fixed	NA	Lo	Fixed	Fixed	NA	4

AP TANK FARM

Issue #	Protective Device Coordination Issues	Recommendations	Status	Comment
8.5.41	General — Circuit breakers with instantaneous trip characteristics with no intentional delay may not achieve selective coordination with other nearby instantaneous trip devices. This situation is commonly found at a panel or motor control center with thermal-magnetic main and feeder circuit breakers. Short circuits on the feeders with sufficient available fault current may trip the main breaker. This situation is found in the system of this study at MCC-002, and MCC-003. At MCC-002 for example, a short circuit at the annulus exhaust fans may have sufficient fault energy to trip the MCC-002 main breaker. A potential solution is to raise the instantaneous trip setting of the main breaker. In this example of MOC002, however, even the highest available setting (6000A) is insufficient to provide complete coordination of Instantaneous tripping. At MCC-003, there is sufficient available short circuit current at the location of the end use loads to trip the incoming feeder breaker (BKR-1 16) supplying all of MCC 003.	NA	NA	NA
8.5.4.2	Circuit Breaker BKR-1 01 (feeder breaker to MCC-001) — Miscoordination of existing settings is present between breakers BKR-1 01 and BKR-1 04, Existing settings may allow the upstream breaker BKR-1 01 to trip for an overload, or low level fault on MCC-002. The recommended settings for BKR-1 01 provide increased selectivity with downstream devices. Reference time current curve TCC: MCC-001 in Appendices E and P.	The recommended settings for BKR-101 provide increased selectivity with downstream devices	NA	Breaker trip unit was changed from Amptector I-A Model LIG to Digitrip 910. The new trip unit is set to the maximum value on the LTD and to 8X on the INST. There is no setting on the new trip unit of the breaker for a setting of 10x. See8.5.4 above
8.5.4.3	Circuit Breakers BKR-1 03, -104, -127— There is overlap of the low level short circuit trip characteristics of these three breakers. It is possible that a low level fault at MCC-002 may trip the main breaker (BKR-1 03) of MCC-001, before the MCC-002 feeder breaker (BKR-1 04) or MCC-002 main breaker (BKR-127) can clear the fault. There are no available adjustments on the existing breakers that Will affect this condition. Reference Time Current Curve MCC-002 in Appendices E and P.	NA	NA	NA

AP TANK FARM

Issue #	Protective Device Coordination Issues	Recommendations	Status	Comment
8.5.4.4	Circuit Breaker BKR-1 16 (feeder breaker to MCC-003) — Selective coordination with downstream devices can be improved by increasing the instantaneous setting of BKR-1 16 (See 6.5.4). Reference time current curves TCC: SA-CMP-001 and TCC: EDS-DP-106 in Appendices E and P.	NA	NA	The Instaneous trip setting for the breaker cannot be increased as specified. The impact of unplanned outages caused by mis-coordination of this breaker is minimal. No further action is required.

Issue #	Arc Flash Evaluation Study Issues	Recommendations	Status	Comment
NA	NA	NA	NA	NA

7.0 AW TANK FARM

Document Number	Release Date	SKM/PTW Version	NEC Code	Contractor
RPP-8183 Rev 1	03/31/2005	5.0.2.8 Build 2	2002	FFS

	Electrical Study Section	Total Issues	Open Issues Requiring Field Work	Open Issues Requiring a Document Change ECN	Issues Resolved
1	NEC Issues	5	0	1	4
2	Demand Load Study	0	0	0	0
3	Load Flow and Voltage drop Study	0	0	0	0
4	Short Circuit Study	0	0	0	0
5	Protective Device Coordination	2	2	0	0
6	Equipment Evaluation Report	3	0	0	3
7	Arc Flash Evaluation Study	1	1	0	0
	Total	11	3	1	7

AW TANK FARM

Issue #	National Electric Code (NEC) Issues	Recommendations	Status	Comment
8.1.1	Circuit breakers in panels AW241-EDS-DP-100 and AW241-EDS-DP-201A are mounted in two rows, and oriented in a vertical position. Half of the breakers are arranged such that the UP position of the handle is the "OFF" position of the breaker. This is a violation of NEC article 240-81.	Rearrange / replace panel such that breaker handles are operated in horizontal plane, or, use as is with facility management acceptance and approval.	Resolved	The facility was installed with as built drawing released late 1982, the NEC 240-81 which prohibits horizontal mount of the breaker became effective in the 1987 code, and therefore this is considered to be within the code of record. These breakers are not used for routine operation and can be used by qualified electrical technicians only, therefore this configuration considered satisfactory H-14-030002, Sh.1, Rev.18 H-14-030002, Sh.3, Rev.10 H-14-030002, Sh.5, Rev.1 H-14-030002, Sh.13, Rev.6
8.1.2	Supernatant Pumps AW01A-WT-P-001, AW03A-WT-P-008, AW04A-WT-P-011, AW05A-WT-P-014, and AW06A-WT-P-017 are 30HP. The NEC FLA for 30HP motor is 40A. PTW calculated load flow for the motors (assumed to be operating) is approximately 43A. The motor circuit conductors between the receptacle and the motor are indicated to be #8AWG. The NEC ampacity of a #8 flexible cord or cable is at most 40A per NEC Table 400-5(A) and 48A per NEC Table 400-5(B). The calculated load flow to the 30HP motors exceeds the ampacity of the motor circuit conductors. NEC article 430-22 requires motor circuit conductors to be rated for 125% motor FLA (40 x 1.25 = 50A). The #8 conductors are in violation of the NEC.	Increase size of motor circuit conductors (50A minimum).	Document Change ECN Required	1) Pumps AW01A-WT-P-001, AW03A-WT-P-008, AW04A-WT-P-011 have been disconnected per ECN-724186, R.0 and Drawing H-14-030002, sh.1, Rev.17 2) Pump AW06A-WT-P-017 conductors have been changed by ECN-664744, R.0 to show #6 wire is installed. 3) A walkdown was performed on 10/6/2008 on Pump AW05A-WT-P-014 circuit and verified the cable between MCC compartment down to the MCC terminal strip is #8 (About 4 feet), and the cable between the MCC terminal strip to the field is #6, the SOW cable going to the pump is also # 6 cable. The cabinet is compliant with UL-508A, "Industrial Control Panel" Section 29.6(a), internal wiring sizing. This section use 100% FLA for sizing the wires. The Field wiring from the MCC terminal strip to the load is #6 AWG which is good for 55Amp. The field

AW TANK FARM

Issue #	National Electric Code (NEC) Issues	Recommendations	Status	Comment
				installation is NEC compliant. No further action required ECN-664744, R.0. Changed the wire size to show #6AWG wire connected to AW06A-WT-P-017. ECN Required Reference: H-14-030002
8.1.3	Circuit breaker BKR-102 has a 60A trip rating. The feeder originating at BKR-102 is #8 AWG, with an NEC ampacity of 40A. The feeder conductor is not adequately protected by the feeder breaker. This is a violation of NEC 240-3.	Replace feeder with larger conductors (#6 AWG), or replace BKR-102 with one of lower trip rating (40A).	Resolved	Confirmed that a #6 AWG cable is installed. The conductor was replaced by a #6 AWG conductor by ECN-723356, R.0 Reference: See H-14-03002 Sh.1. ECN-723356, R.0
8.1.4	Motor circuits supplied by circuit breakers BKR-104, BKR-105, and BKR-113 are #8 AWG with an NEC ampacity of 40A. The 30HP motors have an NEC FLA of 40A. NEC article 430-22 requires conductors to be rated for 125% FLA (50A). The #8 conductors are not in compliance with NEC article 430-22.	Replace conductors with larger size (#6 minimum).	Resolved	This item is Duplicate of 8.1.2 No action required.
8.1.5	Secondary conductors of transformer XFMR-108 are #4 AWG with NEC ampacity of 70A. These conductors are inadequately protected by the 80A main breaker in panel AW818-EDS-DP-108C. This is a violation of NEC article 240.21(c) (3).	Reduce trip rating of main breaker in panel EDS-DP-108C (70A maximum) or replace transformer XFMR-108 secondary conductors with larger (#3 minimum) conductors.	Resolved	Breaker was changed to 70A breaker by ECN-723497 Rev 0. Reference: H-14-030002, sh.12, Rev.3

AW TANK FARM

Issue #	Demand Load Issues	Recommendations	Status	Comment
	NA	NA	NA	NA

Issue #	Load Flow & Voltage Drop Issues	Recommendations	Status	Comment
8.3.4	The following bus voltage drops exceed the ANSI C84.1 limits (8.3% voltage drop) with 480V maintained at the utility transformer secondary bus: Bus Voltage Drops > 8.3% (480V Assumed at Utility Transformer Secondary Bus) Component Name: High Phase Voltage Drop None:	NA	NA	No bus voltage drops exceed ANSI C84.1

Issue #	Short circuit Study Issues	Recommendations	Status	Comment
	NA	NA	NA	NA

AW TANK FARM

<table>
<tr><th>Issue #</th><th>Protective Device Coordination Issues</th><th>Recommendations</th><th>Status</th><th>Comment</th></tr>
<tr><td>8.5.4</td><td>Where existing protective device coordination could be improved using existing equipment, recommended setting changes are provided and summarized in the following Table.
<table>
<tr><th colspan="11">Circuit Breaker Trip Settings, Summary</th></tr>
<tr><th></th><th colspan="5">Existing Setting</th><th colspan="5">Recommended Setting</th></tr>
<tr><th>Breaker</th><th>LTPU</th><th>LTD</th><th>STPU</th><th>STD</th><th>INST</th><th>LTPU</th><th>LTD</th><th>STPU</th><th>STD</th><th>INST</th></tr>
<tr><td>BKR-100</td><td>1.0</td><td>20</td><td>4</td><td>0.33</td><td>6</td><td>1</td><td>20</td><td>4</td><td>0.33</td><td>12</td></tr>
</table></td><td>Change the instantaneous to 12 max</td><td>Field Work Required</td><td>Need to set breaker 100 to the recommended settings
WDL-110917
Reference:
H-14-030002, Sh.1, Rev.18</td></tr>
<tr><td>8.5.5.2</td><td>The maximum available instantaneous setting will not provide complete short circuit coordination with close-in, high magnitude faults on the feeders downstream of the following MCC-001 feeder breakers: BKR-102, -103, -104, -105, -106, -107, -108, -109, -111, -112, -113, and -115</td><td>Disable the instantaneous trip, if possible. If the instantaneous cannot be disabled, set at maximum (12X). However, the highest available instantaneous setting is insufficient to provide a trip setting greater than the available short circuit current downstream of the feeder breakers, and selectivity may not be achieved for feeder short circuits near the MCC.</td><td>Field Work Required</td><td>Need to verify the breaker settings are consistent with the recommended settings.
WDL-110917
Reference:
H-14-030001, Sh.1 Rev.18
H-14-030001, Sh.2 Rev.11</td></tr>
<tr><td>8.5.5.3</td><td>Breaker BKR-111 is a feeder breaker in MCC-001 upstream of MCC-002 protecting the approximately 350 foot long feeder. The MCC-002 main breaker has no overcurrent trip functions. The maximum available instantaneous setting of BKR-111 will not provide complete short circuit coordination with MCC-002 feeder circuit breakers for high magnitude short circuits on most feeders downstream of MCC-002</td><td>Accept as is</td><td>NA</td><td>Accept as is</td></tr>
</table>

AW TANK FARM

Issue #	Protective Device Coordination Issues	Recommendations	Status	Comment
8.5.5.4	Panel AW273-EDS-DP-108A Main Breaker – The instantaneous trip on the main breaker in panel AW273-EDS-DP-108A (PTW label DP-108A-Main) miscoordinates with the instantaneous trip of the mini mini-power zone primary main breaker BKR-114, and with the instantaneous trip of the branch breaker in panel DP-108A, for high level short circuits on the conductors supplying panel AW273-EDS-DP-108B in the mini power zone	Accept as is	NA	Accept as is
8.5.5.5	Panel AW273-EDS-DP-108A Main Breaker – The instantaneous trip on the main breaker in panel AW273-EDS-DP-108A (PTW label DP-108A-Main) miscoordinates with the instantaneous trip of the mini mini-power zone primary main breaker BKR-114, and with the instantaneous trip of the branch breaker in panel DP-108A, for high level short circuits on the conductors supplying panel AW273-EDS-DP-108B in the mini power zone	Accept as is	NA	Accept as is

Issue #	Equipment Evaluation Issues	Recommendations	Status	Comment
8.6.1	Equipment evaluation based upon load flow current indicates the following non-passing status:	Verify loads on Panel DP-102A and re-assess main breaker rating. Verify loads on Panel DP-102B and re-assess main breaker rating. Verify loads on Panel DP-201A and re-assess main breaker rating.	Resolved	Connected load without application of demand factors exceeds the over current device settings, but is within the device Ampere Interrupting Capacity (AIC). The over current trip is acceptable to facility operation. No action required. References: H-14-030002, sh.1, Rev.18 H-14-030002, sh.3, Rev.10

Device	Status	Comment
	Fail (Applied at > 100% Current Rating)	
BKR-101	X	673A on 600A rating.
BKR-201	X	25A on 20A rating.
DP-102A-MAIN	X	103A on 70A rating
DP-102B-MAIN	X	31A on 30A rating
DP-201A-MAIN	X	62A on 60A rating

AW TANK FARM

<table>
<tr><th>Issue #</th><th>Equipment Evaluation Issues</th><th>Recommendations</th><th>Status</th><th>Comment</th></tr>
<tr><td>8.6.2</td><td>Design load current (50A) on MCC-001 feeders supplying 30HP supernatant pumps WT-P-008 and WT-P-014 exceeds the ampacity (40A per NEC 310-16 at 60 degrees C) of the #8 conductors. This result would be typical of the other similar supernatant pump motor (WT-P-001, WT-P-017) circuits if they were in service (in this study). NEC FLA for 30 HP motors is 40A. NEC 430-22 requires motor circuit conductors to be rated for 125% FLA = 40 x 1.25 = 50A. Equipment evaluation based upon load flow current indicates the following non-passing status.
<table>
<tr><th>Device</th><th>Status</th><th>Comment</th></tr>
<tr><td></td><td>Fail
(Applied at > 100% Current Rating)</td><td>LF = Load Flow</td></tr>
<tr><td>CBL-DP-102B</td><td>X</td><td>33A on 30A feeder.</td></tr>
<tr><td>CBL-DP-201A</td><td>X</td><td>62A on 55A feeder.</td></tr>
<tr><td>WR19</td><td>X</td><td>50A on 40A feeder
See 8.1.2 and 8.6.2.1</td></tr>
<tr><td>WR20</td><td>X</td><td>50A on 40A feeder
See 8.1.2 and 8.6.2.1</td></tr>
<tr><td>WR24</td><td>X</td><td>50A on 40A feeder
See 8.1.2 and 8.6.2.1</td></tr>
<tr><td>WR66</td><td>X</td><td>47A on 40A feeder</td></tr>
</table></td><td>Compliance with NEC 430-22 requires replacement of the conductors with larger (#6 minimum) conductors. See</td><td>Resolved</td><td>This is a duplicate issues described in items 8.1.2 and 8.1.5. By resolving 8.1.2 and 8.1.5 it will resolve issues identified by this item.
1) Pumps AW01A-WT-P-001, AW03A-WT-P-008, AW04A-WT-P-011 have been disconnected per ECN-724186, R.0 and Drawing H-14-030002, sh.1, Rev.17
2) Pump AW06A-WT-P-017 conductors have been changed by ECN-664744, R.0 to show #6 is installed.
3) A walkdown was performed on 10/6/2008 on Pump AW05A-WT-P-014 circuit verified the cable between MCC compartment down the MCC terminal strip is #8 (About 4 feet), and the cable between the MCC terminal strip to the field is #6, the SOW cable going to the pump is also # 6 cable.</td></tr>
<tr><td>8.6.3</td><td>Drawing H-14-030002 Sheet 1 shows the fuse size of fuses in disconnect AW241-EDS-DS-111 as 15A. The field walk down found the fuse sizes to be 1-20A and 1-30A contrary to the drawing. The conductor size was found to be #12 AWG. The 20A fuses were modeled in the report due to the installed installation. There is not enough data available on the load side components to determine the use of 15A vs. 20A fuses. The 30A fuse does not provide the required over current protection for #12 AWG conductors as required by the NEC</td><td>Replace the existing 20A and 30A fuses with 15A fuses in the field to agree with the design and corresponding floodlight fuse installations off of the same circuit</td><td>Resolved</td><td>An electrician verified that 15A fuses are installed on 09/26/2008.
No further action required
Reference:
H-14-030002, Sh.1, Rev.18</td></tr>
</table>

AW TANK FARM

Issue #	Arc Flash Evaluation Study Issues	Recommendations	Status	Comment
8.7.6	The Arc Flash Evaluation indicates all evaluated fault locations in the 480V-208V systems produce arc flash incident energy values below 1.2 cal/cm^2 (PPE Hazard Class 0) except for the following:	NA	NA	NA

Arc Flash Incident Energy > 1.2 cal/cm^2			
Bus Fault Location	Incident Energy (cal/cm^1.2)	PPE Class	Comment
BUS-BKR-100LD	40.4	Dangerous!!!	2 second max. arc exposure time assumed
BUS-ENCL-100	40.2	Dangerous!!!	2 second max. arc exposure time assumed
BUS-BKR-101	39.8	4	2 second max. arc exposure time assumed
EDS-MCC-001	39.8	4	2 second max. arc exposure time assumed
RCPT-WT-P-017	7.01	2	
BUS-WT-P-017	6.69	2	2 second max. arc exposure time assumed
RCPT-WT-P-001	6.64	2	2 second max. arc exposure time assumed
XFMR-111-SEC	6.61	2	2 second max. arc exposure time assumed
BUS-WT-P-001	6.31	2	2 second max. arc exposure time assumed
BUS-POLE-NP1A	4.43	2	2 second max. arc exposure time assumed
C5662P-PRI	4.41	2	2 second max. arc exposure time assumed
RCPT-WT-P-014	4.27	2	2 second max. arc exposure time assumed
BUS-WT-P-014	4.15	2	2 second max. arc exposure time assumed

AW TANK FARM

Issue #	Arc Flash Evaluation Study Issues	Recommendations	Status	Comment
	BUS-DP-111 | 3.26 | 1 | Line Side Fault Location | | | | DP-111-MAIN | 6.68 | 2 | Note: Assumed maximum arc exposure time is 2 seconds.			
8.7.7	The high arc flash incident energies associated with the first four bus locations in the table above are due to the high long time delay and instantaneous settings of breaker BKR-100. The original trip unit possessed a short time trip function that would allow selective coordination for overloads and low value short circuits as well as reduce trip times and available arc flash energies for high short circuit currents. A replacement trip unit recently installed does not include a short time trip function	Replace trip unit with one possessing short time trip functions	Field Work Required	The currently installed breaker 100, has a trip unit that includes a short timer setting. This setting being set under item 8.5.4. Breaker 101 needs to be replaced with a breaker with a trip unit possessing a short time trip function. Work Package TFC-WO-08-2310 is prepared. An ECN is required. Reference: H-14-030002, Sh.1, Rev.18

8.0 AY TANK FARM

Document Number	Release Date	SKM/PTW Version	NEC Code	Contractor
RPP-CALC-24468 Rev 0	04/21/2005	5.0.2.8 Build 2	2002	FFS

	Electrical Study Section	Total Issues	Open Issues Requiring Field Work	Open Issues Requiring a Document Change ECN	Issues Resolved
1	NEC Issues	6	2	0	4
2	Demand Load Study	1	0	0	1
3	Load Flow and Voltage drop Study	1	0	0	1
4	Short Circuit Study	0	0	0	0
5	Protective Device Coordination	1	1	0	0
6	Equipment Evaluation Report	2	1	0	1
7	Arc Flash Evaluation Study	0	0	0	0
	Total	11	4	0	7

AY TANK FARM

Issue #	National Electric Code (NEC) Issues	Recommendations	Status	Comment
8.1.1	Conductors (PTW CBL-DS-101) between disconnect switch F8X696 and disconnect switch DS-I01 are assumed to be #8 AWG to match adjacent conductor sizes. Ampacity of# 8 AWG at 60 deg C is 40A, however, conductor protection is provided by 200A fuses in F8X696.	Verify conductor and fuse size. Re-conductor or change fuse size as required.	Resolved	This cabinet was updated per ECN-725269-R0. This ECN was released in 2/2008 and worked completed in 6/2008. No issues remain. Reference: ECN-725269-R0 H-14-030006, sh.1, Rev.14
8.1.2	Conductor (PTW CBL-DP-105) between transformerXFMR-105 and panel DP-105 is #4 AWG with 60 deg C ampacity of 70A and 75 deg C ampacity of 85A. Downstream main breaker of DP-105 is 100A. The 100A breaker does not provide adequate overcurrent protection for the #4 transformer secondary tap conductors per NEC 240.21 (C).	Decrease main breaker rating to 90A if rated for 75 deg C, 70A if rated for 60 deg C.	Field Work Required	The secondary conductor size is #4 which is good for 70A at 60 deg according to NEC table 310-16. AY241-EDS-DP-105 main breaker needs to be replaced with 70A max to comply with NEC 240-21 (C) There is no immediate hazard since the total AY241-EDS-DP-105 load of 14660W @240VAC=61A which does not exceed the cable rating of 70A but the main breaker need to be replaced to comply with the NEC code. Work package TFC-WO-08-2312 has been assigned. ECN Required. Reference: H-14-030006, sh.1, R. 14 H-14-030006, sh.7, R. 3
8.1.3	Wire run WR362 is a #8 AWG tap conductor originating at TBX-W314-07 and terminating at disconnect switch DS-202 with a 60 deg C ampacity of 40A and a 75 deg C ampacity of50A. Fuses in DS-202 are 45A and do not provide adequate overcurrent protection for the 60 deg C ampacity of the #8 conductors. (Ref. H-2-64347 Sh. 3 Rev 4, H-2-64348	Verify 60A disconnect switch DS-202 is rated for 75 deg C wiring. If not, increase wire size or decrease fuse rating.	Resolved	Contacted Allen-Bradley Manufacturer on 10/8/2008, been informed that the fuse disconnect switch rated for 14 to 4 AWG IEC 947 60 or 75 deg copper wire. In this case using 75deg of NEC table 310-16 the cable is good for 50A. No further action required

AY TANK FARM

Issue #	National Electric Code (NEC) Issues	Recommendations	Status	Comment
	Sh. 1 Rev 9)			Reference: H-14-030006, Sh.1, Rev.14, H-2-64347 Sh 3, Rev.5 H-2-64348 Sh 1, Rev.10
8.1.4	AY801A-EDS-MCC-001 feeder breaker BKR-152 trip rating is 30A. Downstream conductors (PTW WR319a, WR319b) are #12 AWG with an NEC maximum overcurrent protection limit of 20A. The 30A feeder breaker does not provide adequate overcurrent protection for the #12 conductors. (Ref. H-2-64341 Sh. 1 Rev 8, ECN W314-50·028)	Change BKR-152 to have a 20A trip rating.	Field Work Required	Work package TFC-WO-08-2313 has been submitted to change the breaker. ECN-726043-R0 is being developed. Reference: H-14-030006, Sh.1, Rev.14
8.1.5	AY801A-EDS-MCC-001 feeder breaker BKR-152 trip rating is 30A. Downstream floodlight transformers XFMR-102 and XFMR-103 are 5kVA with primary full load amps (FLAs) of 10.4A. The 30A trip rating ofBKR-152 does not provide adequate transformer primary overcurrent protection per NEC 450.3 (B).	Change BKR-152 to have a 20A trip rating.	Resolved	This is a duplicate of 8.1.4 above. Reference: H-14-030006, Sh.1, Rev.14
8.1.6	Wire run WR363 is a #6 AWG tap conductor originating at TBX-W314-07 and terminating at disconnect switch DS-203 with a 60 deg C ampacity of 55A and a 75 deg C ampacity of 65A. Fuses in DS-203 are 60A and do not provide adequate overcurrent protection for the 60 deg C ampacity of the #6 tap conductors. (Ref. H-2-64347 Sh. 3 Rev 4, H-2-64348 Sh. I Rev 9)	Verify 60A disconnect switch DS-203 is rated for 75 deg C wiring. If not, increase wire size or decrease fuse rating.	Resolved	This is a duplicate of 8.1.3. Contacted Allen-Bradley Manufacturer on 10/8/2008, been informed that the fuse disconnect switch rated for 14 to 4 AWG IEC 947 60 or 75 deg copper wire. In this case using 75deg of NEC table 310-16 the cable is good for 65A No further action required Reference: H-14-030006, Sh.1, Rev.14 H-2-64347 Sh 3, Rev.5 H-2-64348 Sh 1 , Rev.10

AY TANK FARM

Issue #	Demand Load Issues	Recommendations	Status	Comment
8.2.2	The PTW demand load study indicates a calculated connected load of approximately 315 kVA, a demand load of approximately C6528P/C6529P/C6530P based upon the configuration and operating conditions of the PTW model.		Resolved	Unnecessary loads were physically disconnected to resolve the issue.

Issue #	Load Flow Study Issues	Recommendations	Status	Comment
8.3.4	The voltage drop calculation indicates the following bus voltage drops exceed the ANSI C84.1 limits (8.3% voltage drop) with 480V maintained at the utility transformer secondary bus:	NA	Resolved	Actions were taken to reduce the load, Reference: TE-06-020 R.2, ECN-724335 ECN-723341

Bus Voltage Drops > 8.3%	
(480 Assumed at Utility Transformer Secondary Bus)	
Component Name	High Phase Voltage Drop (%)
BUS-HVAC	9.04
BUS-DP-105	8.77
BUS-DP-103	8.55
BUS-DP-102	8.53

Issue #	Short circuit Study Issues	Recommendations	Status	Comment
	NA	NA	NA	NA

AY TANK FARM

<table>
<tr><th>Issue #</th><th>Protective Device Coordination Issues</th><th>Recommendations</th><th>Status</th><th>Comment</th></tr>
<tr><td>8.5.4.4</td><td>Although they meet the NEC requirements for overcurrent protection, comparison of the cable thermal damage curve with the time-current characteristics of the upstream protective device indicates the following cables may not be adequately protected from damage due to overloads or short circuits. Cable damage temperature is assumed to be 150 deg. C with an initial operating temperature of75 deg. C. Field verification of cable insulation may be warranted.
<table>
<tr><th>Cable Name</th><th>Reference TCC</th><th>Wire Size</th><th>Protective Device (Upstream)</th><th>Comment</th><th></th><th></th></tr>
<tr><td>CBL-BKR-152LD</td><td>FL-POLE1</td><td>12</td><td>BKR-152 C-H, HFD,30A</td><td>Not NEC compliant see 8.1.4</td><td>See 8.1.4</td><td>Duplicate</td></tr>
<tr><td>WR319a</td><td>FL-POLE1</td><td>12</td><td>BKR-152 C-H, HFD,30A</td><td>Not NEC compliant see 8.1.4</td><td>See 8.1.4</td><td>Duplicate</td></tr>
<tr><td>WR319b</td><td>FL-POLE2</td><td>12</td><td>BKR-152 C-H, HFD,30A</td><td>Not NEC compliant see 8.1.4</td><td>See 8.1.6</td><td>Duplicate</td></tr>
<tr><td>WR363</td><td>RCPT-203</td><td>6</td><td>BKR-153 C-H, HFD,100A</td><td>see 8.1.6</td><td></td><td>Duplicate</td></tr>
<tr><td>WR323A</td><td>DP-102</td><td>40</td><td>BKR-155 C-H, HFD,250A</td><td>Transformer secondary tap, downstream protection.</td><td>Acceptable</td><td>Resolved</td></tr>
<tr><td>WR322</td><td>RCPT-121</td><td>10</td><td>BKR-157 C-H, HFD,240A</td><td></td><td>New fuse installed 15A</td><td>Resolved</td></tr>
<tr><td>WR361</td><td>RCPT-201</td><td>10</td><td>BKR-160 C-H, HFD,70A</td><td>Tap conductor, downstream protection.</td><td>New 25 Amp Fuse</td><td>Resolved</td></tr>
<tr><td>WR362</td><td>RCPT-202</td><td>8</td><td>BKR-160 C-H, HFD,70A</td><td>Tap conductor, downstream protection.</td><td>New 45 Amp Fuse</td><td>Resolved</td></tr>
</table></td><td>NA</td><td>Resolved</td><td>A field walkdown and inspection was performed and determined that conductor insulation in all circuits is rated for 90 deg. C and wire sizing was consistent with recommended ampacities per NEC 2008 table 310.16.
There was no indication of excessive heat or discoloration on the wire insulation or terminations.
Annual preventive maintenance is performed on the Motor Control Center (MCC) that provides power for these branch circuits. This preventive maintenance program performs a check of the tightness of all connection along with a visual inspection of each of the individual conductors for signs of deterioration, heat, discoloration of conductors.
Reference:
SKM System Analysis Inc. purpose and guidelines for basic over current protection philosophy for insulated power cables
IEEE 242-2001 chapter 9 Cable ProtectionH-14-030006, Sh.1.</td></tr>
</table>

AY TANK FARM

Issue #	Protective Device Coordination Issues							Recommendations	Status	Comment
	WR170	DP-110	4	BKR-163 C-H, HJD, 200A	Tap conductor, downstream protection.	Replace cable with 3/0 or reduce the breaker to 20A	Field Work			
	CBL-CP-202	EF-001	10	BKR-110 C-H, FD, 50A	Motor circuit	Replace breaker to 30A	Field Work			
	CBL-EF-001	EF-001	10	BKR-110 C-H, FD, 50A	Motor circuit		Duplicate			
	CBL-ENCL-201	HTR-003	4	BKR-163 C-H, HJD, 200A	Tap conductor, downstream protection.		Duplicate			
	CBL-ENCL-301	HTR-004	4	BKR-164 C-H, HJD, 200A	Tap conductor, downstream protection.	Replace BKR-164 to 70A trip	Field Work			
	CBL-ENCL-302	EF-002	10	BKR-164 C-H, HJD, 200A	Motor feeder tap.	Duplicate	Duplicate			
	CBL-EF-002	EF-002	10	BKR-113 C-H, FD, 50A	Motor circuit	Change breaker BKR-113 to 30A trip	Field Work			
	WR180	DP-111	4	BKR-164 C-H, HJD, 200A	Tap conductor, downstream protection.	Duplicate	Duplicate			
	CBL-DS-101	DP-105	8	FU-F8X696 BUSS, RES, 200A	See 8.1.1	Duplicate	Duplicate			

AY TANK FARM

<table>
<tr><th>Issue #</th><th>Equipment Evaluation Issues</th><th>Recommendations</th><th>Status</th><th>Comment</th></tr>
<tr><td>8.6.1</td><td>Protective equipment evaluation based upon load flow current indicates the following protective equipment is applied beyond its continuous current rating:
<table>
<tr><th colspan="3">Continuous Current Ratings Exceeded</th></tr>
<tr><th>Component Name</th><th>Rating Exceeded</th><th>Comment</th></tr>
<tr><td>C8X550</td><td>17A on 12A rating</td><td>315 kVA on 225 kVA Transformer Rating</td></tr>
<tr><td>FU-DS-105</td><td>16.6A on 15A rating</td><td>Pole 1 Flood lights</td></tr>
<tr><td>FU-DS-106</td><td>16.8A on 15A rating</td><td>Pole 2 Flood lights</td></tr>
</table></td><td>NA</td><td>Resolved</td><td>This is a duplicate of item 8.1.4
System is lightly loaded according to the meter data (68%) The protective devices will trip (Open) to Protect downstream equipment.
No further action required.</td></tr>
<tr><td>8.6.2</td><td>Non-Protective equipment evaluation based upon load flow current indicates the following equipment is applied beyond its continuous current rating:
<table>
<tr><th colspan="3">Non Protective Device Equipment Evaluation, Load Flow, Failed Equipment</th></tr>
<tr><th>Device</th><th>Criteria Failure</th><th>Comment</th></tr>
<tr><td>CBL-DP-105</td><td>85A > 70A rating</td><td>Review Panel DP-105 loads</td></tr>
<tr><td>C6528-9-30P</td><td>17A > 9.4A rating</td><td>Rating of 225 kVA service transformer exceeded</td></tr>
<tr><td>XFMR-105</td><td>36A > 31.3 rating</td><td>15kVA rating exceeded. Review Panel DP-105 loads</td></tr>
</table></td><td>Verify loads assigned to panel DP-105 as recorded on H-14-030003 Sh. 7 Rev 3. Note that panel schedule loads are given in Watts with no stated power factor. In general, this calculation assumed a power factor of 90%.</td><td>Resolved</td><td>Loads were removed using ECN 722089-R0
Reference
H-14-030006 Sh3</td></tr>
</table>

9.0 AZ 701/702 FACILITIES

Document Number	Release Date	SKM/PTW Version	NEC Code	Contractor
RPP-CALC-24466 Rev 0	12/9/2005	Version 5.0.3.0 Build 1	2005	FFS

	Electrical Study Section	Total Issues	Open Issues Requiring Field Work	Open Issues Requiring Document Change ECN	Issues Resolved
1	NEC Issues	0	0	0	0
2	Demand Load Study	0	0	0	0
3	Load Flow and Voltage drop Study	0	0	0	0
4	Short Circuit Study	0	0	0	0
5	Protective Device Coordination	0	0	0	0
6	Equipment Evaluation Report	0	0	0	0
7	Arc Flash Evaluation Study	0	0	0	0
	Total	0	0	0	0

AZ 701/702 FACILITIES

Issue #	National Electric Code (NEC) Issues	Recommendations	Status	Comment
	NA	NA	NA	No Issues Identified

Issue #	Demand Load Issues	Recommendations	Status	Comment
	NA	NA	NA	No Issues Identified

Issue #	Load Flow & Voltage Drop Issues	Recommendations	Status	Comment
8.2	There were some voltage drop warnings issued by the PTW Load Flow and Voltage Drop Analysis. The Equipment Evaluation Reports did report some failures based upon voltage drop criteria problems and the 80 percent rule for breaker/cable loading, for more specific information, see Section 9.0 and Appendices D & H.	NA	NA	NA

Issue #	Short Circuit Study Issues	Recommendations	Status	Comment
	NA	NA	NA	No Issues Identified

Issue #	Equipment Evaluation Issues	Recommendations	Status	Comment
	NA	NA	NA	No Issues Identified

Issue #	Arc Flash Evaluation Study	Recommendations	Status	Comment
	NA	NA	NA	No Issues Identified

10.0 AZ TANK FARM

Document Number	Release Date	SKM/PTW Version	NEC Code	Contractor
RPP-CALC-24465 Rev 0	4/26/2005	5.0.2.8 Build 2	2005	FFS

	Electrical Study Section	Total Issues	Open Issues Requiring Field Work	Open Issues Requiring a Document Change ECN	Issues Resolved
1	NEC Issues	0	0	0	0
2	Demand Load Study	0	0	0	0
3	Load Flow and Voltage drop Study	0	0	0	0
4	Short Circuit Study	0	0	0	0
5	Protective Device Coordination	0	0	0	0
6	Equipment Evaluation Report	0	0	0	0
7	Arc Flash Evaluation Study	0	0	0	0
	Total	0	0	0	0

Issue #	National Electric Code (NEC) Issues	Recommendations	Status	Comment
	NA	NA	NA	No Issues Identified

Issue #	Demand Load Issues	Recommendations	Status	Comment
	NA	NA	NA	No Issues Identified

AZ TANK FARM

Issue #	Load Flow & voltage Drop Issues	Recommendations	Status	Comment
8.2	There were no 1 PH or 3 PH voltage drop warnings issued by the PTW Load Flow and Voltage Drop Analysis. The Equipment Evaluation Reports did report some failures based upon voltage drop criteria problems and the 80 percent rule for breaker/cable loading, for more specific information, see Section 9.1 and Appendices D & H.	NA	NA	NA

Issue #	Short Circuit Study Issues	Recommendations	Status	Comment
	NA	NA	NA	No Issues Identified

Issue #	Equipment Evaluation Issues	Recommendations	Status	Comment
	Equipment Evaluation was run for both 1 PH and 3 PH. The 1 PH and 3 PH reports show "Base Project" device/equipment failures. The term "Fail" in the Equipment Evaluation Report does not mean the equipment has or is going to fail, but that the equipment failed to pass the NEC/IEEE evaluation guidelines. For more specific information, see Section 9.1 and Appendix H.	NA	NA	No Issues Identified

Issue #	Arc Flash Evaluation Study	Recommendations	Status	Comment
	NA	NA	NA	No Issues Identified

11.0 C-109 RETRIEVAL PROJECT

Document Number	Release Date	SKM/PTW Version	NEC Code	Contractor
RPP-CALC-32223 Rev 0	04/19/2007	Version 6.0.2.8	2005	ARES Corporation

	Electrical Study Section	Total Issues	Open Issues Requiring Field Work	Open Issues Requiring a Document Change ECN	Issues Resolved
1	NEC Issues	0	0	0	0
2	Demand Load Study	0	0	0	0
3	Load Flow and Voltage drop Study	0	0	0	0
4	Short Circuit Study	0	0	0	0
5	Protective Device Coordination	0	0	0	0
6	Equipment Evaluation Report	0	0	0	0
7	Arc Flash Evaluation Study	0	0	0	0
	Total	0	0	0	0

C-109 RETRIEVAL PROJECT

Issue #	National Electric Code (NEC) Issues	Recommendations	Status	Comment
	NA	NA	NA	No Issues Identified

Issue #	Demand Load Issues	Recommendations	Status	Comment
	NA	NA	NA	No Issues Identified

Issue #	Load Flow & voltage Drop Issues	Recommendations	Status	Comment
	NA	NA	NA	NA

Issue #	Short Circuit Study Issues	Recommendations	Status	Comment
	NA	NA	NA	No Issues Identified

Issue #	Equipment Evaluation Issues	Recommendations	Status	Comment
	NA	NA	NA	No Issues Identified

Issue #	Arc Flash Evaluation Study	Recommendations	Status	Comment
	NA	NA	NA	No Issues Identified

12.0 SY TANK FARM

Document Number	Release Date	SKM/PTW Version	NEC Code	Contractor
RPP-8185 Rev 0	6/24/2004	3.8.1.0 Build 2 4.0.2.6 Build 1	1999	FFS

	Electrical Study Section	Total Issues	Open Issues Requiring Field Work	Open Issues Requiring a Document Change ECN	Issues Resolved
1	NEC Issues	17	8	0	9
2	Demand Load Study	3	0	0	3
3	Load Flow and Voltage drop Study	1	0	0	1
4	Short Circuit Study	0	0	0	0
5	Protective Device Coordination	8	1	0	7
6	Equipment Evaluation Report	4	1	0	3
7	Arc Flash Evaluation Study	0	0	0	0
	Total	33	10	0	23

SY TANK FARM

Issue #	National Electric Code (NEC) Issues	Recommendations	Status	Comment
8.1.1	Breaker F8X703 - The existing Long Time Pick Up setting (1.0), with a 2000A sensor provides a trip setting of 2000A. This setting does not provide adequate overcurrent protection for the incoming conductors. The incoming conductors are (2) parallel 750 kcmil, with a 75 deg. C ampacity of 950A. NEC 230-90 requires the conductors to be protected from overcurrent with a rating not greater than the conductor ampacity.	As a minimum, lower the LTPU setting to the minimum available value of 0.5. This setting is still 50A above the maximum allowed by the NEC, but is the lowest available setting of the existing equipment. However, this configuration is not in compliance with present code. Options include: replace conductors; replace breaker trip unit with one with lower settings; replace breaker current sensors (CTs); or Facility design authority may seek determination of acceptability.	Resolved	The lower LTPU setting for Breaker F8X703 has been set to the 0.5 value. Reference: WT-O6166
8.1.2	Breaker F8X702 - The existing available settings do not provide overcurrent protection for the upstream incoming conductors as required by NEC 230-90, The 2000A sensor and the 0.5 LTPU setting (1000A) is not adequate to protect the parallel 750 kcmil conductors to their 75 deg C ampacity of 950A.	Existing configuration is not in compliance with present code. Replace conductors, replace breaker trip unit, replace breaker current sensors (CTs), or Facility design authority may seek determination of acceptability.	Field Work Required	Replace the tip unit Current Transformer for breakers F8X702 & 703, and adjust trip settings to a maximum of 625Amp. Then close tie-in breaker 4B. Work Package TFC-WO-08-2316 has been initiated. ECN Required Reference: H-2-46424, Sh.1, R.11
8.1.3	Fuse (20A) in starter for EX-C-1 is much larger than required by the load, and is a violation of NEC 430-52	Replace fuse with 7.5A (max) time delay (preferred), or 9A (max) non-time delay fuse.	Field Work Required	Replace the fuse with one that has a rating not exceeding the value given in the NEC Table 430.52. The full load amp (FLA) for 1 ½ motor, 3-Phase, 480 VAC is 3.0A (NEC Table430-250. The percentage of full load current is 300% (3.0A X 300%=9.0A) for non-time delay fuse and 175% (3.0A X 175%= 5.25A, next fuse size up to 7.5A) for a time-delay fuse. Work Package Required ECN Required Reference: H-2-46424, Sh.2, Rev.9 NEC Table 430.52

SY TANK FARM

Issue #	National Electric Code (NEC) Issues	Recommendations	Status	Comment
8.1.4.	Secondary conductors on transformer SY241-EDS-XFMR-102 do not posses overcurrent protection required by NEC 240-21 (c), The sum of the downstream overcurrent devices (100A fuses in SY241-EDS-DS-130 and 70A fuses in SY-EDS-DS-131) exceeds the ampacity (150A) of the secondary conductors (wire run HMS-15)	Install larger secondary conductors, or decrease the sum of the downstream fuse ratings to 150A or less. (See paragraph 8.1.5 below)	Field Work Required	Breaker SY272-EDS-BKR-117 has been opened to de-energize the Data Acquisition & Control System (DACS) Trailer. An ECN has been prepared to lift the leads at load side of breaker SY272-EDS-BKR-117 Work package Number TFC-WO-08-2316 has been submitted to perform this work Reference: H-14-030031, sh.3, Rev.9 H-14-030031, Sh.27, Rev.1
8.1.5	Fuses in disconnect switch SY241-EDS-DS-131 supplying SY461-VT-HVAC-3 do not provide required overcurrent protection of downstream conductors (wire run HMS-17). Installed fuses are 70A, cable ampacity is 55A @ 60 deg C	Reduce the rating of the fuses to 55A or less	Resolved	This item is addressed by item 8.1.4 above Reference: H-14-030031, sh.3, Rev.9
8.1.6	Cable HMS-107 is not adequately protected from overcurrent by the 200A rating of the upstream breaker BKR-129 in MCC-003. Ampacity of the *1/0* conductors is 150A @ 75 deg. C	Replace BKR-129 with one of lower current (trip) rating, 150A or less	Field Work Required	Reduced the load by de-energizing the SHIMs cabinets and determined that the connect load does not exceed the ampacity of the HMS-1207 conductor. Work package TFC-WO-08-2317 has been submitted ECN Required Reference: H-14-030031, sh.4, Rev.2 H-14-030031, sh.20, Rev.4 H-14-030031, sh.21, Rev.2
8.1.7	Cable HMS-19 on secondary of transformer EDS-XFMR-105 does not have overcurrent protection required by NEC 240-21 (c). Cable ampacity is 310A @ 75 deg. C. The sum of the overcurrent ratings of the devices downstream (EDS-DS-142, -149, & -150) is 480A	Increase size of HMS-19 conductors, or decrease the sum of the ratings of the downstream overcurrent devices. (See paragraph 8.1.8)	Resolved	This issue is addressed by 8.16. Above.

SY TANK FARM

Issue #	National Electric Code (NEC) Issues	Recommendations	Status	Comment
8.1.8	Cable HMS-19C supplying disconnect switch EDS~DS-150 is not adequately protected from overcurrent as required by NEC 240-21 (b) (1) (a). The cable ampacity is 70A, and terminates at the disconnect switch containing 80A fuses. The 80A fuses do not provide the required overcurrent protection.	Replace the fuses with ones of lower rating, 70A or less	Resolved	The fuse was changed from 80A to 40A to comply with the NEC code. No further action required Reference: ECN-722997, R.0.. H-14-030031, sh.4, Rev.2 H-14-030031, sh.4, R.2
8.1.9	Primary conductors on transformer SY276-EDS-XFMR-106 supplying panel EDS-DP-116 are not adequately protected from overcurrent by upstream devices as required by NEC 240-3. Conductor ampacity is 40A. Upstream disconnect switch EDS-DS-152 contains 60A fuses.	Replace the 60A fuses with 40A fuses	Resolved	This issue is addressed by 8.1.4 above. Reference: H-14-030031, sh.5, Rev.6
8.1.10	Transformer SY241-EDS-XFMR-107 does not have overcurrent protection as required by NEC 450-3(b). Secondary protection is required unless primary protection is provided at 125% transformer FLA or less. Primary protection is greater than 125% FLA, therefore 125% maximum secondary overcurrent protection is required. Transformer FLA is 31A. 125% FLA is 39A. The only existing secondary overcurrent device is the 80A main breaker in panel SY241-EDS-DP-118. Existing secondary overcurrent protection exceeds the maximum allowed.	Install lower rated (40A or less) main breaker in panel EDS-DP-118. (See 8.1.11 below)	Field Work Required	The main breaker in DP-118 should be replaced with 40A breaker to comply with the NEC code 450-3(b). ECN-726117-R0 is being developed Work Package TRC-WO-08-2318 has been submitted to replace the breaker. Reference: H-14-030031, sh.5

SY TANK FARM

Issue #	National Electric Code (NEC) Issues	Recommendations	Status	Comment
8.1.11	Breaker F8X703 – The existing Long Time Pick Up setting (1.0) with a 2000 A sensor, provides a trip setting of 2000A. This setting does not provide adequate overcurrent protection for the incoming conductors. The incoming conductors are (2) parallel 750 kcmil, with a 75 deg C ampacity of 950A. NEC 230.90 requires the conductors to be protected from overcurrent with a rating not greater than the conductor ampacity.	As a minimum lower the LTPU setting to the minimum available value of 0.5. This setting is still 50A above the maximum allowed by the NEC, but is the lowest available setting of the existing equipment. However this configuration is not in compliance with present code. Options include: replace breaker trip unit with one with lower settings; replace breaker current sensors (CTs); or Facility design authority may seek determination of acceptability.	Resolved	This issue is addressed by 8.1.10.
8.1.12	Secondary conductors on transformer EDS-XFMR-107 supplying panel EDS-DP-118 are not provided adequate overcurrent protection required by NEC 240-21 (c). Ampacity of secondary conductors is 70A. Downstream overcurrent device is 80A main breaker in panel EDS-DP-118. The 80A main breaker does not provide the required (70A or less) overcurrent protection	Install lower rated (70A or less) main breaker in panel EDS-DP-118.	Resolved	This issue is addressed by 8.1.10. Install a 40A main breaker in panel SY241-EDS-DP-118.
8.1.1.3	Cable HMS-24 is not adequately protected from overcurrent by upstream devices as required by NEC 240-3. Cable ampacity is 40A. Upstream overcurrent device(s) are 50A fuses in disconnect switch EDS-DS-146	Replace 50A fuses with 40A (or less) fuses	Resolved	This issue is addressed by 8.1.6. This circuit feeds SHIMS Cabinet SY103-SHM-PNL-005. This equipment have been de-energized. Reference: H-14-030031, sh.4, Rev.2

SY TANK FARM

Issue #	National Electric Code (NEC) Issues	Recommendations	Status	Comment
8.1.14	Primary conductors on 50kVA transformer 242-S- T-1 are not adequately protected against overcurrent by upstream breaker in MCC-E-001 cubicle 01, based upon the assumption of paragraph 6.4 above, and NEC 240-3. The ampacity of the AWG #1 cable is 110A @ 60 deg. C. Upstream circuit breaker is a 150A frame, with 125A trip rating. While the 150 frame circuit breaker may allow use of the #1 cable at its 75 deg. C ampacity (130A), it is assumed by this study that the 50 kVA transformer (60 FLA) dictates use of the 60 deg. C conductor rating	Verify transformer primary connections are rated for use with 75 deg. C wire, or replace the 125A trip circuit breaker with a breaker rated at 110A or less	Field Work Required	Verify transformer primary connection lugs are rated for use with 75 deg. C wire, or replace the 125A trip circuit breaker with a breaker rated at 110A or less ECN Required Work Package Required Reference: H-2-46424, Sh.4, Rev.14.
8.1.15	Primary conductors on 50kVA single phase transformer EDS-XFMR-100 are not adequately protected against overcurrent by upstream breaker BKR-104 in EDS-MCC-001 cubicle B4, as required by NEC 240-3. The ampacity of the AWG #2 cable is 95A @ 60 deg. C. Upstream circuit breaker is a 150A frame, with 125A trip rating.	Replace the 125A trip circuit breaker with a breaker rated at 100A or les	Field Work Required	The cable between XFMR-100 and BKR-104 is size #2 which is good according table 310-16 to 95A @ 60 deg. The upstream breaker is 125AT. The cable is not protected. There is no immediate hazard since the SHIMS panel SY102-SHM-PNL-005 is OFF. Removal the SHIMS panel load it will bring the total connected load to less the maximum current for the cable. ECN Required) Work Package: TFC_WO-08-2319 has been submitted to replace the breaker. Reference: H-14-030031, Sh.1, Rev.13

SY TANK FARM

Issue #	National Electric Code (NEC) Issues	Recommendations	Status	Comment
8.1.16	Calculated Connected Load, and Demand Load (6.5 kVA) on transformer EDS-XFMR·101 supplying panel EDS-DP-105 exceeds the 5 kVA rating of the transformer. However, no conductors are overloaded	Verify circuit loads given in panel schedule. Identify any operational constraints or interlocks that will allow consideration of non-coincidental loads. Assess need for larger transformer. Recognize that upstream primary transformer protection (10A fuse in disconnect DS-125) provides overcurrent protection at less than 100% of transformer's rated full/load current	Resolved	The drawing was updated to the current field condition under ECN-726036-R0. This resolves the issue no further action required. Reference: H-14-030031 sh 12
8.1.17	Conductors (#4 AWG) supplying 50HP motor K1-5-3 from MCC-E-001 cubicle C5 have an ampacity of 70A. NEC 430-22 requires motor conductors with ampacity of 125% motor FLA. 50HP motor FLA(65Ax1.25=81A is 81A. Conductors are inadequately sized for the load	Increase size of motor branch circuit conductors	Field Work Required	K1 is the primary exhaust fan for 242-S. Work Package TFC-W-08-0456 has been submitted to determine and correct the K-1 fan motor pigtail wire size and type. Reference: H-14-46424, Sh.3, R.11,

SY TANK FARM

Issue #	Demand Load Issues	Recommendations	Status	Comment
8.2.1	The demand load study for transformer C6647P indicates a calculated demand load of approximately 1210 kVA, based upon the PTW model Actual electric utility meter data for the last 2 years (Ref. Appendix U) indicates: an average consumption of 87 kW; a (monthly average) demand of 269 kW; and a maximum demand of 569 kW. Assuming a 90% power factor, these equate to 97 kVA; 299 kVA; and 632 kVA respectively. The metered (averaged) demand load is approximately 25% of the PTW calculated demand load.	NA	Resolved	This issue is resolved by issue number:8.1.2
8.2.2	The demand load study for transformer C6648P indicates a calculated demand load of approximately 340 kVA, based upon the PTW model. Actual electric utility meter data for the last 2 years (Ref. Appendix U) indicates: an average consumption of 40 kW; a (monthly average) demand of 70 kW; and a maximum demand of 119 kW. Assuming a 90% power factor, these equate to 44 kVA; 78 kVA; and 132 kVA respectively. The metered (Averaged) demand load is approximately 23% of the PTW calculated demand load.	NA	Resolved	This issue is resolved by issue number:8.1.2
8.2.3	Actual total metered (averaged) demand load (299 + 78 =377 kVA) for the tank farm is approximately 24% of the total demand load (1210 + 340 =1550 kVA) calculated from the PTW mode/(s) in this study. Note that the PTW calculated demand load includes the 498 kW Flush Tank Heater HTR-302C-2.	NA	Resolved	This issue is resolved by issue number:8.1.2

SY TANK FARM

<table>
<tr><th>Issue #</th><th>Load Flow & Voltage Drop Issues</th><th>Recommendations</th><th>Status</th><th>Comment</th></tr>
<tr><td>8.3.1</td><td>PTW load flow and voltage drop output reports (for Case 1) are located in Appendices C, K, and N, Appendix C and K contain output reports for PTW Version 3.8 and 4.0 balanced load flow and voltage drop study. Appendix N contains output report for the Version 4.0 unbalanced study.</td><td></td><td>NA</td><td></td></tr>
<tr><td>8.3.2</td><td>Guidelines (NEC 21 0-19(a) FPN No.4 and 215-2(d) FPN No.2) for allowable load flow voltage drop are 3% in a feeder, and 5% total at furthest downstream bus (equipment location). These voltage drops do not include voltage drops due to utility system and service transformer impedances.</td><td></td><td>NA</td><td></td></tr>
<tr><td>8.3.3</td><td>For this study, the voltage drop at the secondary of the service transformers will be subtracted from the associated total bus voltage drops to determine acceptance of the voltage drops of the distribution system downstream of the service transformers. PTW calculated voltage drops for the service transformers are approximately 2.2% for TXEE-002 serving SWG-E-001 Bus #1 with a secondary bus voltage drop of approximately 1.1 %; and 5.0% for TX-E-001 serving SWG-E-001 Bus #2 with a secondary bus voltage drop of 3.9%.</td><td></td><td>NA</td><td></td></tr>
<tr><td>8.3.3.1</td><td>Load flow voltage drop studies performed by PTW 3.8.1.0 and 4.0, (ignoring the voltage drop(s) up stream of the secondary of the service transformer) indicate the following violations of the above voltage drop guidelines:
<table>
<tr><th colspan="4">Load Flow Voltage Drop Excursions > 5% for Bus, 3% for Branch</th></tr>
<tr><th>PTW Bus Name</th><th>LFVD (%) Bus</th><th>LFVD (%) System Net (Neglect 13.8kV System)</th><th>Comments</th></tr>
<tr><td>XFMR-106-SEC</td><td>6.03</td><td>5.43</td><td rowspan="7">Load flow associated with loads assigned to EDS-DP-116</td></tr>
<tr><td>BUS-ATS-101</td><td>6.18</td><td>5.58</td></tr>
<tr><td>BUS-DS-153</td><td>6.26</td><td>5.66</td></tr>
<tr><td>BUS-EDS-DP-116</td><td>6.3</td><td>5.7</td></tr>
<tr><td>BUS-UPS-100</td><td>6.45</td><td>5.85</td></tr>
<tr><td>BUS-DP-115</td><td>6.49</td><td>5.89</td></tr>
<tr><td>BUS-DS-155</td><td>6.51</td><td>5.91</td></tr>
</table></td><td></td><td>Resolved</td><td>As noted in issue 8.3.4, the measured loads for this facility are between 23 and 25% of the connected loads There are no changes planned to either the facility or its operation that will increase the electrical load.
No Action Required.</td></tr>
</table>

SY TANK FARM

Issue #	Load Flow & Voltage Drop Issues				Recommendations	Status	Comment
	BUS-HVAC-102	6.41	5.81				
	BUS-DP-119	6.89	6.29				
	BUS-TRLR-PNL	10.32	6.43	Load flows associated with assumed load on Change Trailer.			
	CHNG-TRLR-SEC	10.09	6.2				
	BUS-DP-112	11.8 (A Ph)	Approx 10	Load flows associated with EDS-DP-112.			
	BUS-DS-141	11.5 (A Ph)	Approx 10				
	BUS-DS-140	9.6 (A Ph)	Approx 8				
	BUS-DS-137	9.6 (A Ph)	Approx 8	241-SHM-PNL-005 Feeder			
	BUS-241PNL-005	10.9 (A Ph)	Approx 9				
	BUS-DS-138	9.6	Approx 8	01A-SHM-PNL-005 Feeder			
	BUS-01APNL-005	10.3 (A Ph)	Approx 9				
	BUS-DS-139	9.6 (A Ph)	Approx 8	WST-ENCL-103 Feeder			
	BUS-ENCL-103	9.7 (A Ph)	Approx 8				
	PTW Branch Name	LFVD (%) Branch					
	EDS-XFMR-106	4.23					
	XFMR-CHNG-TRLR	3.79		Load flows associated with assumed load on Change Trailer			
	CBL-DP101CKT10	7.0 (A Ph)					
	CBL-DP1 01 CKT5	5.5 (A Ph)					
	CBL-DP101CKT9	4.5 (A Ph)					
	HMS-20	3.8 (A & B Ph)					
	HMS-6	3.6 (A & C Ph)					
	WR-1	3.2 (A & C Ph)					
	WR-2	3.6 (A & C Ph)					

SY TANK FARM

Issue #	Load Flow & Voltage Drop Issues	Recommendations	Status	Comment
8.3.3	Four of the above noted load flow voltage drop excursions are associated with the loads assumed for the change trailer served by Welding Outlet 1. With no other load information available, the PTW model assumes the 25 kVA transformer supplying the change trailer is fully loaded, resulting in load currents that may be greater than actual		NA	
8.3.4	Note that voltage drop is a function of load flow current, and that metered total (demand) load is approximately 23% and 25% of calculated demand load (based upon loading assumptions of this study) for SWG-E-001 Bus #1 and Bus #2 respectively. Based upon the metered demand load, load flow voltage drops will be significantly less than those calculated by this study model.		NA	

Issue #	Short Circuit Study Issues	Recommendations	Status	Comment
8.4.1	Short circuit study output reports are located in Appendices D, L, and O.	NA	NA	
8.4.2	Calculated available short circuit currents at SWG-E-001 Bus #1 were found to be approximately 11 kA for 3phase, and single-line-to-ground. Short circuit currents were reduced to below 9kA at downstream bus EDSMCC-003.	NA	NA	
8.4.3	Calculated available short circuit currents at SWG-E-001 Bus #2 were found to be approximately 12 kA for 3phase, and single-line-to-ground. Short circuit currents were reduced to below 10 kA at downstream bussesMCC-E-001, EDS-MCC-001, and Power Panelboard D.	NA	NA	

SY TANK FARM

Issue #	Protective Device Coordination Issues	Recommendations	Status	Comment
8.5.1	Time Current Curves for protective devices are located in Appendix E (from PTW 3.8.1.0) and Appendix P (from PTW 4.0).	NA	NA	
8.5.2	Existing and Recommended protective device settings are provided in Appendix F (PTW 3.8.1.0) and Q (PTW 4.0).	NA	NA	
8.5.3	Most of the circuit breakers in the 241SY Farm associated with this study have fixed trip settings. Some of the Larger thermal-magnetic breakers with fixed long-time trips may have adjustable instantaneous settings.	NA	NA	
8.5.4	Where existing protective device coordination could be improved using existing equipment, recommended setting Changes are provided and summarized in the following Table.	NA	NA	
8.5.5	Specific coordination issues are discussed below:	NA	NA	
8.5.5.1	General - Circuit breakers with instantaneous trip characteristics with no intentional delay may not achieve selective coordination with other nearby instantaneous trip devices. This situation is commonly found at a panel or motor control center with thermal-magnetic main and feeder circuit breakers. Short circuits on the feeders with sufficient available fault current may trip the main breaker. This situation is found in the system of this study at EDS-MCC-003-A / EDS-MCC-003-B and main breaker BKR-113; DP-108; EDS-MCC-001 and main breaker BKR- 112; EDS-MCC-002 and upstream manual transfer switch MTS-100; for very high level short circuits close to MCC-E-001: and DP-116.	NA	NA	
8.5.5.2	Breaker F8X703 - The existing ground fault delay settings do not selectively coordinate with downstream	Recommendation: Increase F8X703 Ground Fault Delay	Resolved See 8.1.1	See 8.1.1

SY TANK FARM

Issue #	Protective Device Coordination Issues	Recommendations	Status	Comment
	feeder Breakers (BKR'2A, BKR-2B, BKR-2C, BKR-2D, BKR-3B).	to 0.25 seconds, and set feeder breaker(s) Ground Fault Delay to 0.10 seconds.		
8.5.5.3	Breaker F8X703 - The existing instantaneous setting does not coordinate with several downstream circuit breakers (See discussion in 8.5.5.1 above).	Increase F8X703 instantaneous setting to 12. This will provide selective tripping for short circuits on switchgear feeders, but will sacrifice fast tripping of the main for Switchgear bus faults and backup protection. Due to the falloff of available short circuit current, the "12" setting will effectively disable the instantaneous trip function for all but high magnitude (close) short circuits.	Resolved See 8.1.1	See 8.1.1
8.5.5.4	Breaker F8X702 - The Long Time Pickup and Long Time Delay settings of F8X702 and those of breaker BKR-6C do not provide selective coordination for overloads and short circuits. Pickup of main breaker F8X702 is presently set at 1000A. Pick up of BKR-6C is presently 960A. Additionally, the LTD curves are nearly identical. The maximum allowed LTPU setting of F8X702 is dictated by the NEC overcurrent protection requirements for the incoming conductors, and should not exceed 950A.	As a minimum, increase the LTD setting of F8X702 from 3.5 to 6. If the load requirements of the feeder will allow, decreasing the LTPU of BKR-6C will provide increased selectivity with F8X702 for low overloads.	Resolved See 8.1.1	See 8.1.1
8.5.5.5	Fuses CATH-DS-100 and CATH-D8-101 - These fuses are rated with a 30A trip. They are supplied by a common 20A circuit breaker (#23) in panel DP-108. The 20A circuit breaker will likely trip before either fuse in response to an overload or short circuit downstream of the fuses.	Accept as is.	Resolved	Accept as is.

SY TANK FARM

Issue #	Protective Device Coordination Issues	Recommendations	Status	Comment
8.5.5.6	Panel DP-E-002 - Electronic displays on main and feeder breakers in this panel were inoperable at the time of the field walk down, hence, trip settings could not be determined/verified. Recommended settings are provided, based upon information given on one line drawings, cable ampacities, and consideration of selective coordination.		Field Work Required	Work Package TFC-WO-08-2367 has been submitted to repair the displays.
8.5.5.7	BKR-B4 - The 1000A rating of MCC-E-001 main breaker BKR-B4 does not provide selective coordination with upstream breaker DP-E-002-Ckt1 (600A), nor the main breaker of panel DP-E-002 (1000A). However, BKR-B4 and DP-E-002-Ckt1 are in series in the dedicated incoming feeder to MCC-E-001, and the lack of selectivity between the breakers on the feeder may be tolerable (due to the sizing and trip values for the breakers). Additionally, the feeder breaker DP-E·002Ckt1 should isolate the panel main breaker from tripping due to feeder overloads.	Accept as is.	Resolved	Accept as is.
8.5.5.8	Panel EDS-DP-113 - There is little if any selective coordination between the overcurrent protective devices upstream of panel DP-113 to motor control center EDS-MCC·003-B. Short circuits on or downstream of panel DP-113 may trip the feeder breaker BKR-129 at the MCC. Overloads at the panel may trip any of several upstream devices.	NA	Resolved	Accept as is.
8.5.5.9	Fuse (20A) in starter for EX-C-1 does not coordinate with upstream branch breaker BKR-D2 in Panelboard D. Also, the 20A fuse is much larger than required by the load, and is a violation of NEC 430-52.	Replace fuse with 7.5A (max) time delay (preferred), or 9A (max) non-time delay fuse.	Resolved	This issue addressed by 8.1.3

SY TANK FARM

<table>
<tr><th>Issue #</th><th>Equipment Evaluation Issues</th><th>Recommendations</th><th>Status</th><th>Comment</th></tr>
<tr><td>8.6.1</td><td>Equipment evaluation output reports based upon short circuit ratings are located in Appendices G1 from PTW 3.8.1.0, and R1 from PTW 4.0.</td><td>NA</td><td>NA</td><td></td></tr>
<tr><td>8.6.1.1</td><td>No equipment was noted to be applied outside its short circuit ratings.</td><td>NA</td><td>NA</td><td></td></tr>
<tr><td>8.6.2</td><td>Equipment evaluation (feeders and transformers) based upon current rating and load flow current is presented in Appendices G2 and R2. Warnings noted by these reports include the following:</td><td>NA</td><td>NA</td><td></td></tr>
<tr><td>8.6.2.1</td><td>The following feeders were noted to be applied beyond their ampacity ratings:
<table>
<tr><th>Branch</th><th>Design Load (A)</th><th>Ampacity (A)</th><th>Comment</th></tr>
<tr><td>CBL-ATS-101-LD</td><td>97</td><td>95</td><td>Supplies EDS-DP-116.</td></tr>
<tr><td>CBL-DS-153</td><td>98</td><td>95</td><td>Supplies EDS-DP-116.</td></tr>
<tr><td>CBL-XFMR-106-S</td><td>98</td><td>95</td><td>Supplies EDS-DP-116.</td></tr>
<tr><td>WR-E003, E004</td><td>1737</td><td>950</td><td>Service Lateral supplying SGR-E-001 Bus #2</td></tr>
<tr><td>CBL-XFMR-106-P</td><td>42</td><td>40</td><td>EDS-XFMR-106 primary supply.</td></tr>
<tr><td>CBL-E-001-C5</td><td>81</td><td>70</td><td>K1-5-3 motor feeder. NEC violation. 125% x 65 FLA = 81A</td></tr>
<tr><td>HMS-117</td><td>69</td><td>55</td><td>Supplies VT-HVAC-3. PTW load assumed. Investigate and determine installed load.</td></tr>
<tr><td>CBL-HVAC-103</td><td>69</td><td>55</td><td>Supplies VT-HVAC-103. PTW load assumed. Investigate and determine installed load.</td></tr>
<tr><td>WR-FT104,FT105</td><td>749</td><td>620</td><td>Supplies HTR-302C-2</td></tr>
</table></td><td>NA</td><td>Resolved</td><td>A field walkdown and inspection was performed and determined that conductor insulation in all circuits is rated for 90 deg. C and wire sizing was consistent with recommended ampacities per NEC 2008 table 310.16.
There was no indication of excessive heat or discoloration on the wire insulation or terminations.
Annual preventive maintenance is performed on the Motor Control Center (MCC) that provides power for these branch circuits. This preventive maintenance program performs a check of the tightness of all connection along with a visual inspection of each of the individual conductors for signs of deterioration, heat, discoloration of conductors.
Reference:
SKM System Analysis Inc. purpose and guidelines for basic over current protection philosophy for insulated power cables
IEEE 242-2001 chapter 9 Cable Protection
H-14-030031, Series</td></tr>
</table>

SY TANK FARM

Issue #	Equipment Evaluation Issues	Recommendations	Status	Comment
8.6.2.2	Calculated demand load on service transformer C6647P is approximately 250% of transformer rating.	NA	Resolved	This issue is addressed by issue number 8.1.2. The transformer demands will be reduced to 625A by the actions taken in 8.1.2.
8.6.2.3	Calculated demand load on transformer XFMR-101 is approximately 158% of transformer rating.	NA	Resolved	Walk down performed Document Change ECN726036-R0 was released to update the drawings. Reference: H-14-030031 Series
8.6.2.4	Calculated demand load on transformer XFMR-106 is approximately 108% of transformer rating.	NA	Field Work	Walk down was performed and determined that demand load on the transformer is 75%No further action required. Reference: H-14-0300031 Sh23 H-14-0300031 Sh 5

SY TANK FARM

Issue #	Equipment Evaluation Issues Special case 2	Recommendations	Status	Comment
9.1	Case 2 assumes all SWG-E-001 loads (Bus 1 & 2) are served by a single incoming line and associated transformer. Incoming line breaker 1B and bus tie breaker 4B are closed. Incoming line breaker 78 is open.	NA	NA	NA
9.2	Analysis is limited to load flow and voltage drop, and device evaluation based upon load flow.	NA	NA	NA
9.3	Calculation output reports for Case 2 are contained in appendices M through FF, with a summary and comparison of balanced three phase branch currents and voltage drops in appendix FF.	NA	NA	NA
9.4	The impacts to balanced branch load flows and bus voltage drops of the Case 2 configuration is summarized in Appendix FF. Downstream of the switchgear SWG-E-001, there were no significant changes in load flow. The largest included a 16A increase in the feeder supplying EDS-MCC-003-A and , and a 16A decrease in the current drawn by 498kW heater HTR-302C-2. Calculated overall total (balanced) load current decreased by nearly 20A(@480V). The significant impact of shifting the entire system load onto one incoming line and service.	NA	NA	NA

Issue #	Arc Flash Evaluation Issues	Recommendations	Status	Comment
	NA	NA	NA	NA

Task# WRPS-PER-2008-0167.9

E-STARS[R] Report
Task Detail Report
07/08/2009 0935

TASK INFORMATION			
Task#	WRPS-PER-2008-0167.9		
Subject	WRPS-PER-2008-0167; RES; Ensure ECN-726001-R0 in support of Work Package TFC-WO-08-2307 is released. Deliverable: Electronic copy of released ECN.		
Parent Task#	WRPS-PER-2008-0167	**Status**	CLOSED 02/03/2009
Reference	WRPS-PER-2008-0167	**Due**	02/23/2009
Originator	^PER CAs	**Priority**	Medium
Originator Phone		**Category**	PER
Origination Date	12/30/2008 0929	**Generic1**	None
Remote Task#		**Generic2**	None
Deliverable	PER Review	**Generic3**	None
Class	None	**View Permissions**	Global
Instructions	*No Instructions*		

ROUTING LISTS		
1	Corrective Action	Inactive
	Ensure ECN-726001-R0 in support of Work Package TFC-WO-08-2307 is released. Deliverable: Electronic copy of released ECN. Reference: Issue 8.1.2 AP Farm RESPONSIBLE MANAGER: When this corrective action is complete, enter a closure statement in E-STARS and close the E-STARS subtask. Refer to the Problem Evaluation Request procedure TFC-ESHQ-Q-C-C-01, Section 4.4 for closure documentation requirements	
	• Ewer, Kenneth L - Assign - Completed with comments - 01/22/2009 1325 *Instructions:*	
	• Knight, Mark A - Review - Concur with comments - 01/22/2009 1328 *Instructions:*	

ATTACHMENTS	
Attachments	1. DNFSB Electrical Letter Attachment.pdf 2. DNFSB Electrical Letter.pdf 3. Link to PER 4. RE_ WRPS-PER-2008-0167 _RES_.msg 5. WRPS-PER-2008-0167 EVENT & CAUSAL FACTORING CHART.pdf 6. WRPS-PER-2008-0167.9 CLOSURE ECN-726001-R0.pdf

COMMENTS	
Poster	Ewer, Kenneth L (Bragg, David A) - 01/22/2009 1325
	Completed
	ECN-726001-R0 was issued on 01/22/09 in support of work package TFC-WO-08-2307. This completes the corrective action. The PER originator has declined involvement in the disposition of this PER.
Poster	Knight, Mark A (Bragg, David A) - 01/22/2009 1328
Editor	Knight, Mark A (Bragg, David A) - 01/22/2009 1331
	Concur

Task# WRPS-PER-2008-0167.9

	ECN-726001-R0 was issued on 01/22/09 in support of work package TFC-WO-08-2307. This completes the corrective action. The PER originator has declined involvement in the disposition of this PER.		
Poster	^PER CAs (Owen, Annette) - 02/03/2009 1050		
	CLOSED		
	Closure statement and attached documentation are adequate to close this action.		
TASK DUE DATE HISTORY			
Modified	12/30/2008 0929 - ^PER CAs	**New Due Date**	02/23/2009 0000
Modified	12/30/2008 0929 - ^PER CAs	**New Due Date**	10/03/2009 0000
SUB TASK HISTORY			
No Subtasks			

-- end of report --

CH2M HILL ENGINEERING CHANGE NOTICE

☐ DM ☒ FM ☐ TM

1a. **ECN** 726001 **R** 0

1b. **Proj. ECN** N/A - - R

2. **Simple Modification** ☒ Yes ☐ No	3. **Design Inputs** – For full ECNs, record information on the ECN-1 Form (not required for Simple Modifications)		4. **Date** 11/11/08
5. **Originator's Name, Organization, MSIN, & Phone No.** Kenneth Ewer, BO Maint. Eng, S5-07, 373-5090	6. **PrHA Number** No. PrHA-00574 R - 0 ☐ N/A	7. **USQ Number** No. TF - 09 - 0082 - D R - 0 ☐ N/A	8. **Related ECNs** N/A
9. **Title** 241AP Change Wires from #12 to #10 at XFMR-104	10. **Bldg. / Facility No.** 241AP	11. **Equipment / Component ID** AP241-EDS-BKR-136	12. **Approval Designator** N/A
13. **Engineering Documents/Drawings to be Changed** (Incl. Sheet & Rev. Nos.) H-14-030003, sheet 3, Rev 11		14. **Safety Designation** ☐ SC ☐ SS ☒ GS ☐ N/A	15. **Expedited/Off-Shift ECN?** ☐ Yes ☒ No
16a. **Work Package Number** TFC-WO-08-2307	16b. **Modification Work Completed** Responsible Engineer / Date	16c. **Restored to Original Status (TM)** N/A Responsible Engineer / Date	17. **Fabrication Support ECN?** ☐ Yes ☒ No

18. **Description of the Change** (Use ECN Continuation pages as needed)

GENERAL DESCRIPTION:

The existing wires on load side of AP241-EDS-BKR-136 (30-amp breaker) in 241AP-EDS-MCC-002 are undersized at #12AWG. Per NEC Table 310.16, the conductors are rated for 25A, but limited to only 20A after de-rating for 80% of overcurrent protective device.

SOLUTION:

Replace the existing (2) conductors #12AWG type MTW/ THW insulation with larger wires. The new wires shall be (2) #10AWG copper conductors type MTW/ THW insulation routed a short distance from cubicle B5 of MCC (BKR-136) to XFMR-104 within cubicle B6 of MCC where they terminate at primary side of transformer AP241-EDS-XFMR-104 (as shown on the attached ECN continuation sheet).

ANALYSIS: RPP-RPT-38265, Tank Farm Electrical Distribution Studies, has identifed that the wires at the load side of breaker (BKR-136) are undersized. The report recommends changing either the breaker or wires per NEC. #10AWG conductors are rated 30A, limited to 24A loads and protected by 30A standard 80%-rated breaker per NEC article 240.4(D). AP farm load calculation (RPP-CALC-8182) will be updated at next review cycle.

19. **Justification of the Change** (Use ECN Continuation pages as needed)

Engineering Rework ☐ Yes ☒ No

Training Impact ☐ Yes ☒ No

This change is necessitated from the NEC requirement that conductors be adequately protected from overcurrent, such as an overload condition. Also, RPP-RPT-38265, Tank Farm Electrical Distribution Studies and previous tank farm electrical distribution system studies have concluded that the electrical deficiency exists and needs to be upgraded.

This change will resolve recommendation 8.1.2 of RPP-CALC-8182.

20. **ECN Category**

☐ **Direct Revision**
☒ **Supplemental**
☐ **Void/Cancel**

ECN Type

☐ **Supersedure**
☐ **Revision**

21. **Distribution**

Name	MSIN	Name	MSIN
MA Roberts	S5-07		
EA Hamm	R2-58		
RE Nelson	S5-07		
RL Brooks	S5-03		
JW Kissel	S5-07		

Release Stamp

DATE: JAN 22 2009 HANFORD RELEASE

STA: 4 ID: 8

CH2M HILL ENGINEERING CHANGE NOTICE	1a. ECN 726001 R 0
Page 2 of 3 ☐ DM ☒ FM ☐ TM	1b. Proj. ECN N/A - - R

22. **Revisions Planned** (Include a brief description of the contents of each revision)
N/A

Note: All revisions shall have the approvals of the affected organizations as identified in block 12 "Approval Designator," on page 1 of this ECN.

23. **Commercial Grade Item Dedication Numbers** (associated with this design change)
N/A

24. **Engineering Data Transmittal Numbers** (associated with this design change, e.g., new drawings, new documents)
N/A

25. **Other Non Engineering (not in HDCS) documents that need to be modified due to this change**

Type of Document	Document Number	Update Completed On	Responsible Engineer (print/sign and date)
Alarm Response Procedure	N/A		
Operations Procedure	N/A		
Maintenance Procedure	N/A		

26. **Field Change Notice(s) Used?**
☐ **Yes** ☒ **No**
If Yes, Record Information on the ECN-2 Form, attach form(s), include a description of the interim resolution on ECN Page 1, block 18, and identify permanent changes.

NOTE: ECNs are required to record and approve all FCNs issued. If the FCNs have not changed the original design media then they are just incorporated into the design media via an ECN. If the FCN did change the original design media then the ECN will include the necessary engineering changes to the original design media.

27. **Design Verification Required?**
☐ **Yes** ☒ **No**
If Yes, as a minimum attach the one page checklist from TFC-ENG-DESIGN-P-17.

28. **Approvals**

Facility/Project Signatures		Date	A/E Signatures		Date
Resp. Engineer	KL Ewer Kenneth L. Ewer	12/1/08	Originator/Design Agent		
Resp. Manager	MA Roberts Mark Roberts	01/21/09	Professional Engineer		
Quality Assurance			Project Engineer		
IS&H Engineer			Quality Assurance		
NS&L Engineer			Safety		
Environ. Engineer			Designer		
Engineering Checker	RE Nelson Rick Nelson	12/18/08	Environ. Engineer		
Other			Other		
Other			Other		
Other			DEPARTMENT OF ENERGY / OFFICE OF RIVER PROTECTION		
Other			Signature or a Control Number that tracks the Approval Signature		
Other					
Other			ADDITIONAL SIGNATURES		
Other					
Other					

ENGINEERING CHANGE NOTICE CONTINUATION SHEET Page 3 of 3	☐ DM ☒ FM ☐ TM	1a. ECN 726001 R0 1b. Proj. ECN N/A

Document/Drawing No. H-14-030003, Sheet 3 Revision 11

WAS:

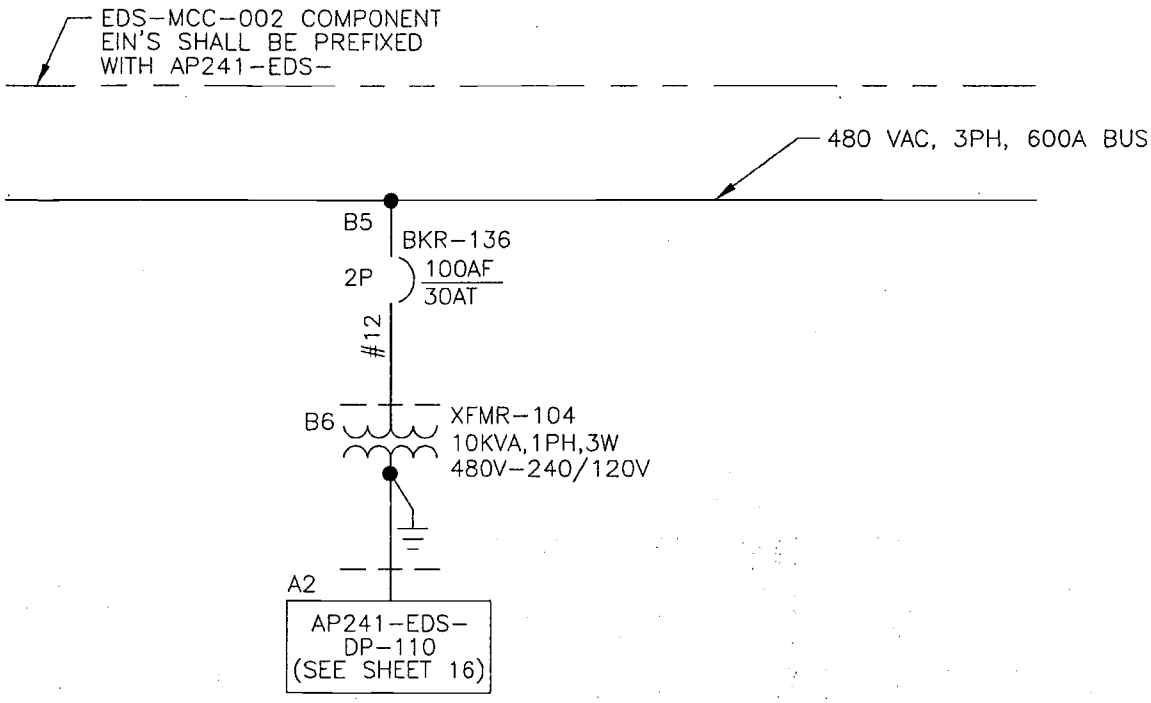

IS:

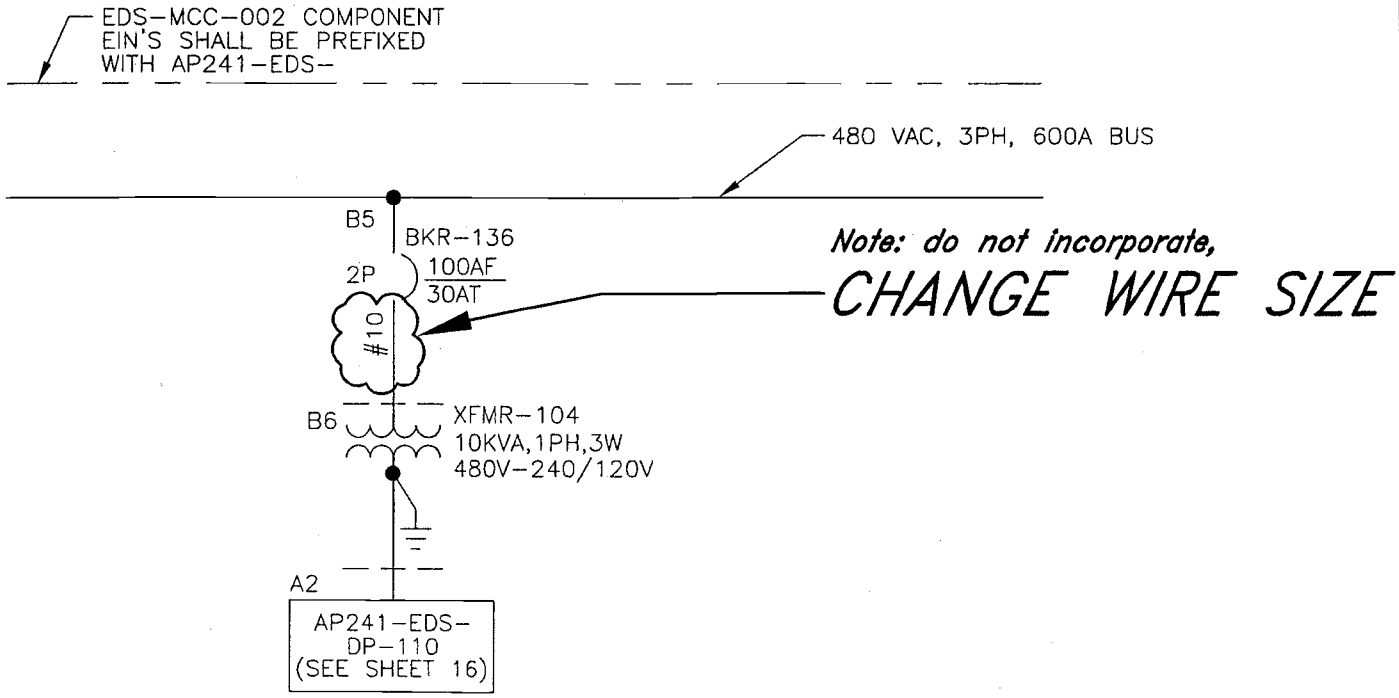

Task# WRPS-PER-2008-0167.10

E-STARS[R] Report
Task Detail Report
07/08/2009 0936

TASK INFORMATION			
Task#	WRPS-PER-2008-0167.10		
Subject	WRPS-PER-2008-0167; RES; Perform work package TFC-WO-08-2307. Deliverable: Copy of work record. Reference: Issue 8.1.2 AP Farm		
Parent Task#	WRPS-PER-2008-0167	**Status**	Open
Reference	WRPS-PER-2008-0167	**Due**	09/21/2009
Originator	^PER CAs	**Priority**	Medium
Originator Phone		**Category**	PER
Origination Date	12/30/2008 0929	**Generic1**	None
Remote Task#		**Generic2**	None
Deliverable	PER Review	**Generic3**	None
Class	None	**View Permissions**	Global
Instructions	*No Instructions*		

ROUTING LISTS

1	Corrective Action	Active
	Perform work package TFC-WO-08-2307. Deliverable: Copy of work record. Reference: Issue 8.1.2 AP Farm RESPONSIBLE MANAGER: When this corrective action is complete, enter a closure statement in E-STARS and close the E-STARS subtask. Refer to the Problem Evaluation Request procedure TFC-ESHQ-Q-C-C-01, Section 4.4 for closure documentation requirements	
	• Brooks, Rocky L - Assign - Awaiting Response - Due Date - 09/15/2009 0000 *Instructions:*	
	• Knight, Mark A - Review - Awaiting Response - Due Date - 09/19/2009 0000 *Instructions:*	

ATTACHMENTS

Attachments	1. DNFSB Electrical Letter Attachment.pdf 2. DNFSB Electrical Letter.pdf 3. Link to PER 4. RE_ WRPS-PER-2008-0167 _RES_.msg 5. WRPS-PER-2008-0167 EVENT & CAUSAL FACTORING CHART.pdf

COMMENTS

No Comments

TASK DUE DATE HISTORY

Modified	12/30/2008 0929 - ^PER CAs	**New Due Date**	09/21/2009 0000
Modified	12/30/2008 0929 - ^PER CAs	**New Due Date**	10/03/2009 0000

SUB TASK HISTORY

No Subtasks

-- end of report --

Task# WRPS-PER-2008-0167.11

E-STARS[R] Report
Task Detail Report
07/08/2009 0936

TASK INFORMATION			
Task#	WRPS-PER-2008-0167.11		
Subject	WRPS-PER-2008-0167; RES; Ensure ECN-725942-R0 in support of Work Package TFC-WO-08-2309 is released.		
Parent Task#	WRPS-PER-2008-0167	**Status**	CLOSED 06/24/2009
Reference	WRPS-PER-2008-0167	**Due**	05/28/2009
Originator	^PER CAs	**Priority**	Medium
Originator Phone		**Category**	PER
Origination Date	12/30/2008 0929	**Generic1**	None
Remote Task#		**Generic2**	None
Deliverable	PER Review	**Generic3**	None
Class	None	**View Permissions**	Global
Instructions	*No Instructions*		

ROUTING LISTS

1	Corrective Action	Inactive
	Ensure ECN-725942-R0 in support of Work Package TFC-WO-08-2309 is released. Deliverable: Electronic copy of released ECN. Reference: Issue 8.1.4 AP Farm RESPONSIBLE MANAGER: When this corrective action is complete, enter a closure statement in E-STARS and close the E-STARS subtask. Refer to the Problem Evaluation Request procedure TFC-ESHQ-Q-C-C-01, Section 4.4 for closure documentation requirements	
	• Nelson, Rick E - Assign - Completed with comments - 05/06/2009 0729 *Instructions:*	
	• Knight, Mark A - Review - Concur with comments - 05/06/2009 0733 *Instructions:*	
	• ^Independent Assessment Review(Penick, Lee R) - Review - Concur - 05/08/2009 0721 *Instructions:*	

ATTACHMENTS

Attachments	1. DNFSB Electrical Letter Attachment.pdf 2. DNFSB Electrical Letter.pdf 3. Link to PER 4. RE_ WRPS-PER-2008-0167 _RES_.msg 5. WRPS-PER-2008-0167 EVENT & CAUSAL FACTORING CHART.pdf 6. WRPS-PER-2008-0167.11 CLOSURE ECN-726275-R0.pdf

COMMENTS

Poster	^PER Coordinator (Owen, Annette) - 02/13/2009 1519
	Due Date Extension

Task# WRPS-PER-2008-0167.11

	1st extension to 5/29/09 per form A-6003-227. An extension is requested due to the schedule changes associate with the annual maintenance outage at AP Farm, which has been moved to May. David Bragg for M Hardy (acting for M Knight) per telecon		
Poster	Nelson, Rick E (Bragg, David A) - 05/06/2009 0729		
	Completed		
	ECN-726275-R0, released on 04/15/09 will resolve the issue associated with this corrective action. It is attached as objective evidence. The PER originator has declined involvement in the disposition of WRPS-PER-2008-0167.		
Poster	Knight, Mark A (Bragg, David A) - 05/06/2009 0733		
	Concur		
	ECN-726275-R0 was released on 04/15/09 to resolve the issue associated with this corrective action. The PER originator has declined involvement in the disposition of corrective actions for WRPS-PER-2008-0167.		
Poster	^PER CAs (Owen, Annette) - 06/24/2009 1404		
	CLOSED		
	Closure statement and attached documentation are adequate to close this action.		
TASK DUE DATE HISTORY			
Modified	02/13/2009 1519 - ^PER Coordinator	**New Due Date**	05/21/2009 0000
Modified	12/30/2008 0929 - ^PER CAs	**New Due Date**	02/24/2009 0000
Modified	12/30/2008 0929 - ^PER CAs	**New Due Date**	10/03/2009 0000
SUB TASK HISTORY			
No Subtasks			

-- end of report --

S

ENGINEERING CHANGE NOTICE

☐ DM ☒ FM ☐ TM

1a. ECN 726275 R 0

1b. Proj. ECN - - R

2. Simple Modification ☒ Yes ☐ No	3. Design Inputs – For full ECNs, record information on the ECN-1 Form (not required for Simple Modifications)		4. Date 3/13/09
5. Originator's Name, Organization, MSIN, & Phone No. BJ Hickman, S5-25, 373-2265	6. PrHA Number No. 00734 R - 0 ☐ N/A	7. USQ Number No. TF-09-0518-D R-0 ☐ N/A	8. Related ECNs N/A
9. Title Remove AP Farm Impact Wrenches & Welding Rcpt from Service	10. Bldg. / Facility No. 241-AP	11. Equipment / Component ID Wrench Stations #1, #2, #3, #4, #5; Weld Rcpt #2, #4	12. Approval Designator N/A
13. Engineering Documents/Drawings to be Changed (Incl. Sheet & Rev. Nos.) See Block 18		14. Safety Designation ☐ SC ☐ SS ☒ GS ☐ N/A	15. Expedited/Off-Shift ECN? ☐ Yes ☒ No
16a. Work Package Number	16b. Modification Work Completed Responsible Engineer / Date	16c. Restored to Original Status (TM) N/A Responsible Engineer / Date	17. Fabrication Support ECN? ☐ Yes ☒ No

18. **Description of the Change** (Use ECN Continuation pages as needed)

Drawings to be Changed: H-14-030003, SH 2, Rev. 14; H-14-030003, SH 10, Rev. 3; H-2-90470, SH 4, Rev 2; H-2-90470, SH 5, Rev. 3; H-2-90477, SH 1, Rev 13.

PROBLEM IDENTIFICATION: Panel AP-271-EDS-DP-104 currently serves (5) welding receptacles, (5) impact wrench stations, Heat Pump AP271-VT-HVAC-100, and Panel AP271-EDS-DP-105. Since the panel's main breaker is 225A, the sum of the non-continuous load current plus 125% of the continuous load current cannot be greater than that value..

SOLUTION: The impact wrench stations in AP Tank Farm are no longer used, and it is believed that two of the welding receptacles can be taken out of service without adversely impacting the ability to perform welding in the AP Tank Farm. If these loads are removed from Panel AP-271-EDS-DP-104, it would bring the panel loading into compliance with the NEC.

19. **Justification of the Change** (Use ECN Continuation pages as needed)

Engineering Rework ☐ Yes ☒ No

Training Impact ☐ Yes ☒ No

Since the impact wrenches are no longer used in AP Tank Farm, they should be taken out of service to allow panel capacity to become available for use by other loads. The number of welding receptacles can be reduced from five to three without adversely impacting the ability to perform welding in the AP Tank Farm. Elimination of these loads will bring panel loading into compliance with NEC at a minimal cost.

20. **ECN Category**

☐ Direct Revision
☒ Supplemental
☐ Void/Cancel

ECN Type

☐ Supersedure
☐ Revision

BEST AVAILABLE COPY

21. **Distribution**

Name	MSIN	Name	MSIN
Mark Roberts	S5-07		
Wayne Winkelman	S5-25		
Jeff Kissel	S5-07		
Rick Nelson	S5-07		
Barbara Hickman	S5-25		

Release Stamp

DATE: APR 15 2009 HANFORD RELEASE

STA: 4 ID: 8

ENGINEERING CHANGE NOTICE	1a. ECN 726275 R 0
Page 2 of 11 ☐ DM ☒ FM ☐ TM	1b. Proj. ECN - - R

22. **Revisions Planned** (Include a brief description of the contents of each revision)
N/A

Note: All revisions shall have the approvals of the affected organizations as identified in block 12 "Approval Designator," on page 1 of this ECN.

23. **Commercial Grade Item Dedication Numbers** (associated with this design change)
N/A

24. **Engineering Data Transmittal Numbers** (associated with this design change, e.g., new drawings, new documents)
N/A

25. **Other Non Engineering (not in HDCS) documents that need to be modified due to this change**

Type of Document	Document Number	Update Completed On	Responsible Engineer (print/sign and date)
Alarm Response Procedure	N/A		
Operations Procedure	N/A		
Maintenance Procedure	N/A		
N/A			

26. **Field Change Notice(s) Used?**
☐ **Yes** ☒ **No**
If Yes, Record Information on the ECN-2 Form, attach form(s), include a description of the interim resolution on ECN Page 1, block 18, and identify permanent changes.

NOTE: ECNs are required to record and approve all FCNs issued. If the FCNs have not changed the original design media then they are just incorporated into the design media via an ECN. If the FCN did change the original design media then the ECN will include the necessary engineering changes to the original design media.

27. **Design Verification Required?**
☐ **Yes** ☒ **No**
If Yes, as a minimum attach the one page checklist from TFC-ENG-DESIGN-P-17.

28. **Approvals**

Facility/Project Signatures		Date	A/E Signatures		Date
Resp. Engineer	Barbara Hickman	3/25/09	Originator/Design Agent		
Resp. Manager	Mark Roberts	4/10/2009	Professional Engineer		
Quality Assurance			Project Engineer		
IS&H Engineer			Quality Assurance		
NS&L Engineer			Safety		
Environ. Engineer			Designer		
Engineering Checker	Rick Nelson	3/24/09	Environ. Engineer		
Other			Other		
Other			Other		
Other			DEPARTMENT OF ENERGY / OFFICE OF RIVER PROTECTION		
Other			Signature or a Control Number that tracks the Approval Signature		
Other					
Other			ADDITIONAL SIGNATURES		
Other					
Other					

Document/Drawing No. N/A Sheet N/A Revision N/A

Block 18, Description of Change Continued:

Analysis:

Since NEC Article 220 calculates loads for commercial and residential facilities, it is not completely relevant to a panelboard that supplies power to tank farm loads. A conservative approach is to take the actual loads for continuous connected loads multiplied by 125 percent and use 80 percent for each circuit breaker (CB) rating supplying welding receptacles and impact wrench stations. For panelboard AP271-EDS-DP-104 this approach yields a value of 359 amperes or 318 amperes if Article 630.11(B) is use for the welding receptacles. These values exceed the panelboard and feeder ratings of 225 amperes and 230 amperes respectively. By removing two of the five 60 ampere welding receptacles and using the 100 percent of two remaining welding receptacle's CB ratings and 85 percent of the third welding receptacle per Article 630.11 (B) and deleting all five 20 ampere impact wrench station's loads yields a total load value of 176 amperes. If we ignore Article 630.11 (B) than the current load is 183 amperes. These values are less than the amperage capacity of either the panelboard's 225 A rating or the 230 A rated panelboard feeder conductors.

Summary of Changes:

H-14-030003, SH 2, Rev. 14: Show de-termination of conductors between panel AP271-EDS-DP-104 and impact wrench stations 1, 2, 3, 4, and 5 at both ends. Attach a label at both ends of each conductor "Out-Of-Service"

H-14-030003, SH 10, Rev. 3: On panelboard schedule AP271-EDS-DP-104 spare out circuits 2, 7, 8, 14, 19, 20, and 26 and adjust wattage ratings to reflect the lower power demand.

H-2-90470, SH 4, Rev. 2: Show installation of nameplate on impact wrench stations 1, 2, 3, 4, and 5 engraved with "OUT OF SERVICE" lettering. Remove cords, receptacles, and fuses as shown on drawing.

H-2-90470, SH 5, Rev. 3: Show installation of nameplate on welding stations 2 and 4 engraved with "OUT OF SERVICE" lettering.

H-2-90477, SH 1, Rev. 13: Add note to wireruns 51, 53, 54, 55, 56, 57, and 60 as follows: "DISCONNECTED AT BOTH ENDS AND LEFT SPARE".

Note: An AutoCAD page may be used in place of this form (the header section items must be included on the AutoCAD page).

ENGINEERING CHANGE NOTICE CONTINUATION SHEET PAGE 4 OF 11	1a. ECN 726275 R0
	1b. Proj. ECN: N/A

Document/Drawing No. H-14-030003 Sheet 2 Revision 14

WAS:

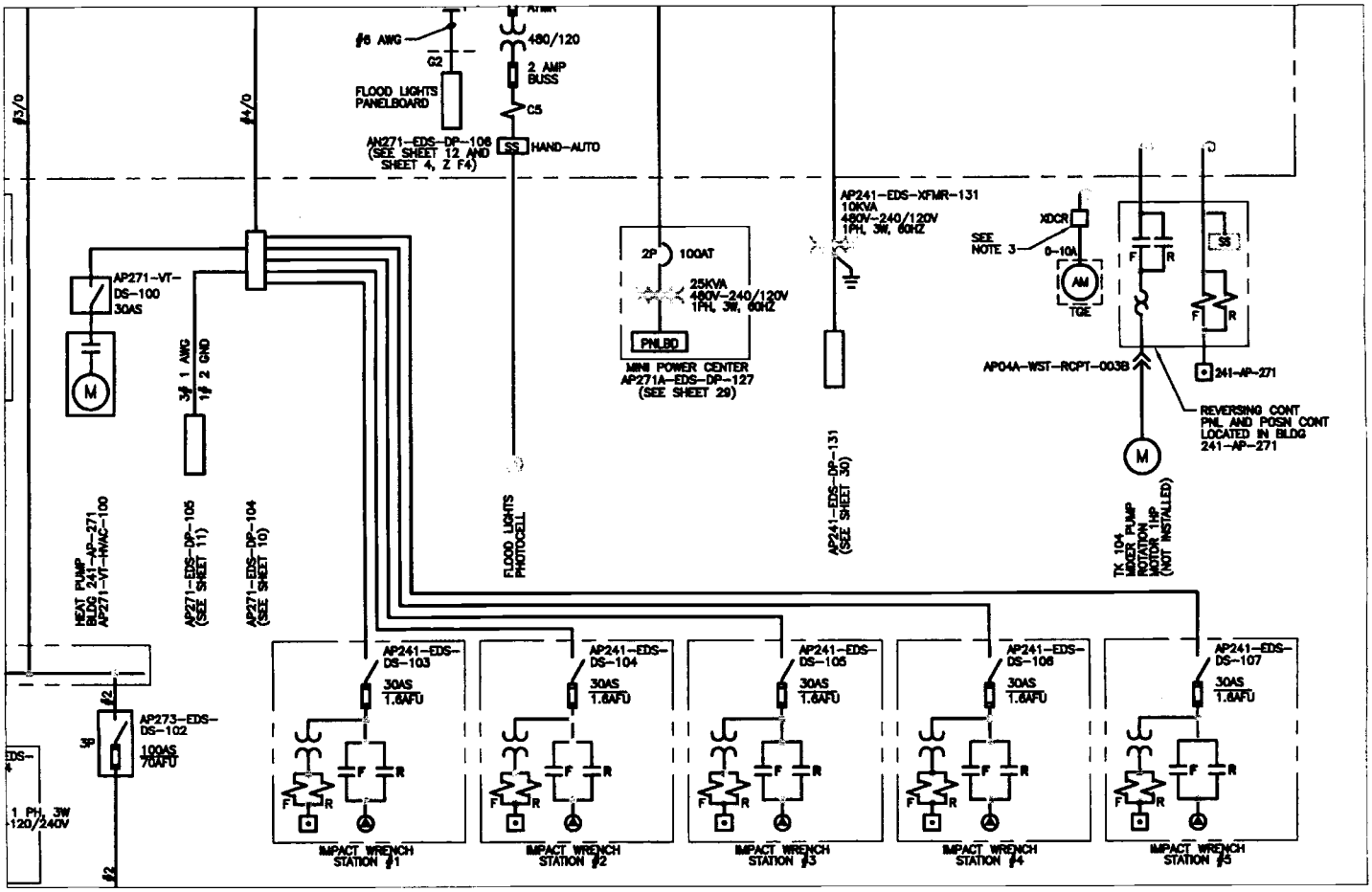

ENGINEERING CHANGE NOTICE CONTINUATION SHEET PAGE 5 OF 11	1a. ECN 726275 R0 1b. Proj. ECN: N/A

Document/Drawing No. H-14-030003 Sheet 2 Revision 14

IS:

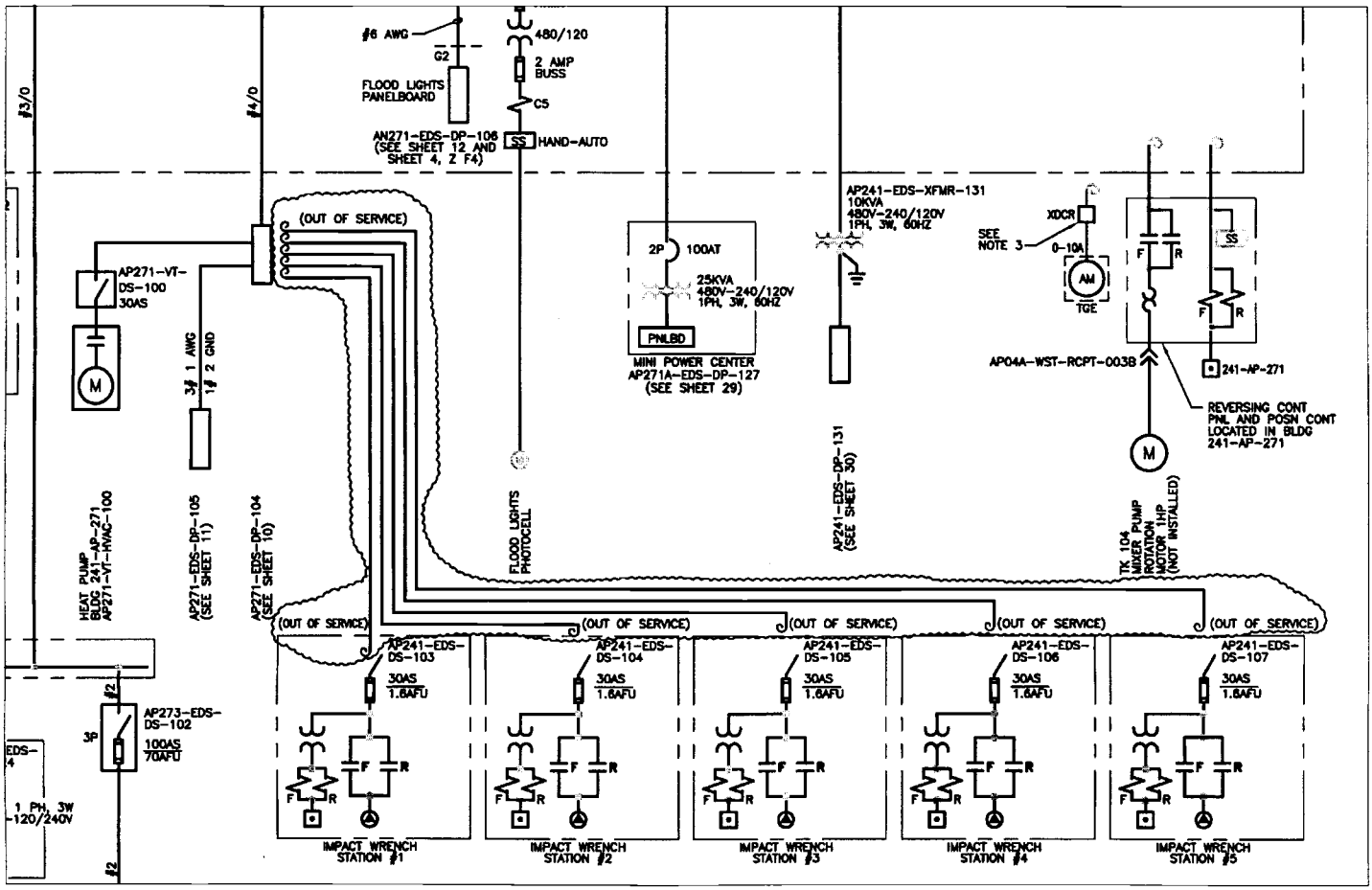

ENGINEERING CHANGE NOTICE CONTINUATION SHEET PAGE 6 OF 11	1a. ECN 726275 R0 1b. Proj. ECN: N/A

Document/Drawing No. H-14-030003 Sheet 10 Revision 3

WAS:

PANEL MFG: ITE
PANEL TYPE (MODEL): CDP-7, SERIES 7A
MAIN BRKR TYPE: NA

PANELBOARD: AP271-EDS-DP-104 LOCATION: BLDG 241-AP-271 VOLTAGE: 480 VAC, 3 PH, 3W
FED FROM: AP271-EDS-MCC-001, COMPT F3 ONE LINE DWG NO: H-14-030003, SH 2

NEMA TYPE: 1 ☐ MAIN BREAKER 225 AMP BUS ☐ PANELBOARD GROUND FAULT PROTECTION
☒ SURFACE MOUNT ☒ LUGS ONLY 225 AMP NEUT
☐ FLUSH MOUNT ☒ TOP ☐ BOTTOM ☐ GROUND BUS ☐ OTHER

FEEDER BRKR TYPE: ITE TYPE FB
MAIN BRKR (AIC): NA
FEEDER BRKR (AIC): 35,000

REMARKS	SCHEME NUMBER	WATTS/HP PH A	PH B	PH C	LOAD DESCRIPTION	SYS NO.	CKT NO.	A	B	C	CKT NO.	SYS NO.	LOAD DESCRIPTION	WATTS/HP PH A	PH B	PHC	SCHEME NUMBER	REMARKS
	B1	13,333	13,333	13,333	WELDING RECEPTACLE NO. 1		1	60		20	2		IMPACT WRENCH PWR AND STORAGE STATION NO. 1	400	400	400	B2	
	B7	13,333	13,333	13,333	WELDING RECEPTACLE NO. 2		7	60		20	8		IMPACT WRENCH PWR AND STORAGE STATION NO. 2	400	400	400	B8	
	B13	13,333	13,333	13,333	WELDING RECEPTACLE NO. 3		13	60		20	14		IMPACT WRENCH PWR AND STORAGE STATION NO. 3	400	400	400	B14	
	B19	13,333	13,333	13,333	WELDING RECEPTACLE NO. 4		19	60		20	20		IMPACT WRENCH PWR AND STORAGE STATION NO. 4	400	400	400	B20	
AP271-VT-DS-100 FED FROM THIS BREAKER. SEE SHEET 2.	B25	3453	3453	3453	HEAT PUMP AP271-VT-HVAC-100 BLDG 241-AP-271		25	20		20	26		IMPACT WRENCH PWR AND STORAGE STATION NO. 5	400	400	400	B26	
	B31	13,333	13,333	13,333	WELDING RECEPTACLE NO. 5		31	60		100	32		AP271-EDS-DP-105	5080	5080	5080		
	SUBTOTAL	70,118	70,118	70,118									SUBTOTAL	7080	7080	7080		

TOTAL WATTS PHASE A: 77,208
TOTAL WATTS PHASE B: 77,208
TOTAL WATTS PHASE C: 77,208
TOTAL: 231,624

BUILDING NO: 241AP & 241AP271

ESSENTIAL DRAWING

FOR FIELD VERIFICATION STATUS SEE ■

H-14-030003 SH 10 OF REV 3

DRAWN	T WALDO II	6/94
CHECKED	G. TILLEY	6/94
DES ENG	BJ WILLIAMS	6/94
DIS ENG	RE LARSON	6/94
APVD	WF WHITE	6/94

U.S. DEPARTMENT OF ENERGY
Office of River Protection

ELECTRICAL (EDS)
PANELBOARD SCHEDULE

SEE ABOVE | H-14-030003 | REV 3

SCALE NONE | 807420 | SHEET 10 OF

PLOTID

REV NO	DESCRIPTION	ENGINEER
3	REVISED PER ECN 721904-R0.	ORR 10/94

SEE SHEET 1

NEXT USED ON H-14-030003, SH 5

ENGINEERING CHANGE NOTICE CONTINUATION SHEET PAGE 7 OF 11	1a. ECN 726275 R0 1b. Proj. ECN: N/A

Document/Drawing No. H-14-030003 Sheet 10 Revision 3

IS:

PANEL MFG: ITE
PANEL TYPE (MODEL): CDP-7, SERIES 7A
MAIN BRKR TYPE: NA

PANELBOARD: AP271-EDS-DP-104 LOCATION: BLDG 241-AP-271
FED FROM: AP271-EDS-MCC-001, COMPT F3
VOLTAGE: 480 VAC, 3 PH, 3W
ONE LINE DWG NO: H-14-030003, SH 2

NEMA TYPE: 1
☒ SURFACE MOUNT
☐ FLUSH MOUNT
☐ MAIN BREAKER
☒ LUGS ONLY
☒ TOP ☐ BOTTOM
225 AMP BUS
AMP NEUT
☐ GROUND BUS
☐ PANELBOARD GROUND FAULT PROTECTION
☐ OTHER

FEEDER BRKR TYPE: ITE TYPE FB
MAIN BRKR (AIC): NA
FEEDER BRKR (AIC): 35,000

REMARKS	SCHEME NUMBER	WATTS/HP PH A	PH B	PH C	LOAD DESCRIPTION	SYS NO.	CKT NO.	A	B	C	CKT NO.	SYS NO.	LOAD DESCRIPTION	WATTS/HP PH A	PH B	PHC	SCHEME NUMBER	REMARKS
	B1	13,333	13,333	13,333	WELDING RECEPTACLE NO. 1		1	60		20	2		SPARE	-	-	-	B2	
	B7	-	-	-	SPARE		7	60		20	8		SPARE	-	-	-	B8	
	B13	13,333	13,333	13,333	WELDING RECEPTACLE NO. 3		13	60		20	14		SPARE	-	-	-	B14	
	B19	-	-	-	SPARE		19	60		20	20		SPARE	-	-	-	B20	
AP271-VT-DS-100 FED FROM THIS BREAKER. SEE SHEET 2.	B25	3453	3453	3453	HEAT PUMP AP271-VT-HVAC-100 BLDG 241-AP-271		25	20		20	26		SPARE	-	-	-	B26	
	B31	13,333	13,333	13,333	WELDING RECEPTACLE NO. 5		31	60		100	32		AP271-EDS-DP-105	5090	5090	5090		
	SUBTOTAL	43,452	43,452	43,452	TOTAL WATTS PHASE A: 46,542 TOTAL WATTS PHASE B: 46,542 TOTAL WATTS PHASE C: 46,542 TOTAL: 145,626								SUBTOTAL	5090	5090	5090		

BUILDING NO: 241AP & 241AP271

ESSENTIAL DRAWING

SEE SHEET 1

NO.	DESCRIPTION	REV BY DATE	CHK BY DATE	OPT'L APPVL DATE	ENGINEER INIT'LS BY DATE
3	REVISED PER ECN 721904-R0.	ORR 10/04			

DRAWN	T WALDO II	6/94
CHECKED	G. TILLEY	6/94
TECH REV	BJ WILLIAMS	6/94
QA	RE LARSON	6/94
PWO	WF WHITE	6/94

U.S. DEPARTMENT OF ENERGY
Office of River Protection

ELECTRICAL (EDS)
PANELBOARD SCHEDULE

SIZE E | SEE ABOVE | 7304 | H-14-030003 | 3

FOR FIELD VERIFICATION STATUS SEE ... 1 ... 3 ... 10 ... H-14-030003

1a. ECN 726275 R0	
1b. Proj. ECN: N/A	

Document/Drawing No. H-2-90470 Sheet 4 Revision 2

WAS:

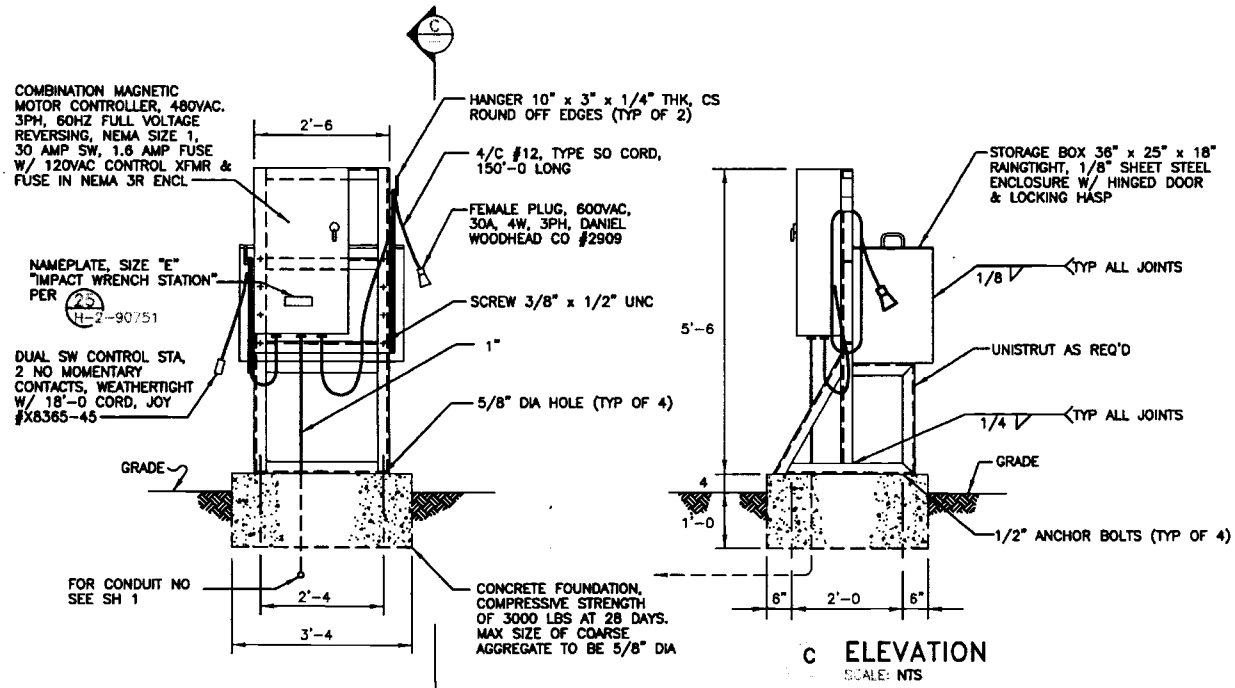

IMPACT WRENCH
PWR & STORAGE STATION
9 DETAIL
SH.1 SCALE: 3/4"=1'-0"

ENGINEERING CHANGE NOTICE CONTINUATION SHEET PAGE 9 OF 11	1a. ECN 726275 R0 1b. Proj. ECN: N/A

Document/Drawing No. H-2-90470 Sheet 4 Revision 2

IS:

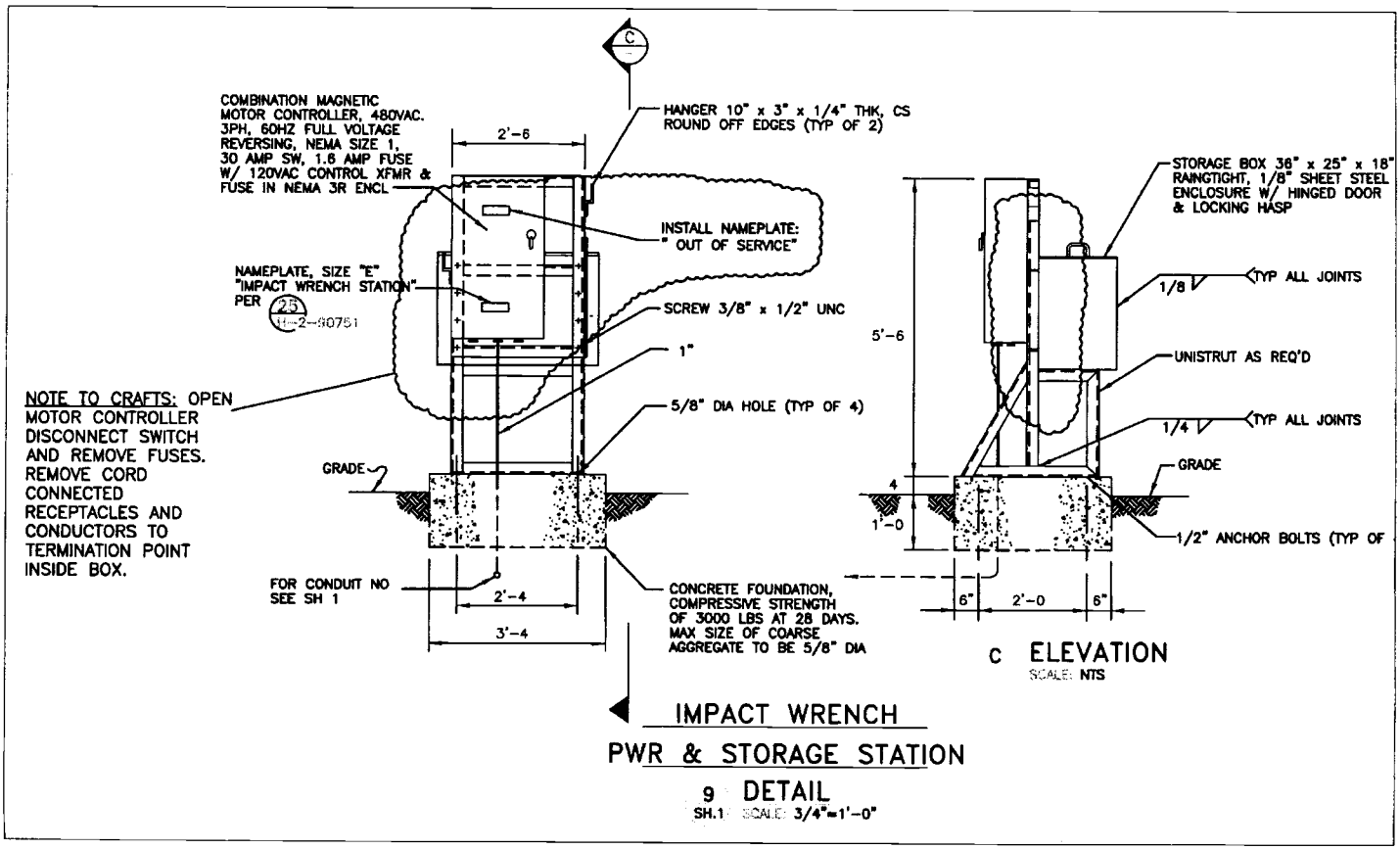

1a. ECN 726275 R0

1b. Proj.
ECN: N/A

Document/Drawing No. H-2-90470 Sheet 5 Revision 3

WAS:

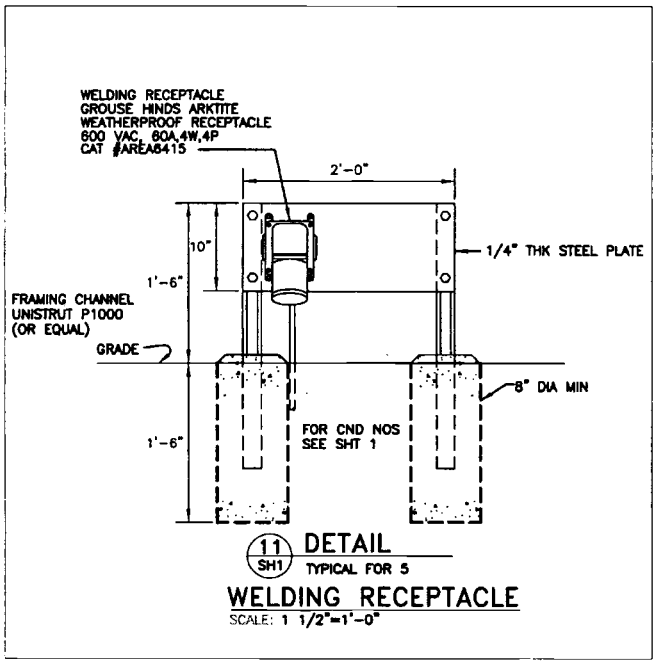

IS:

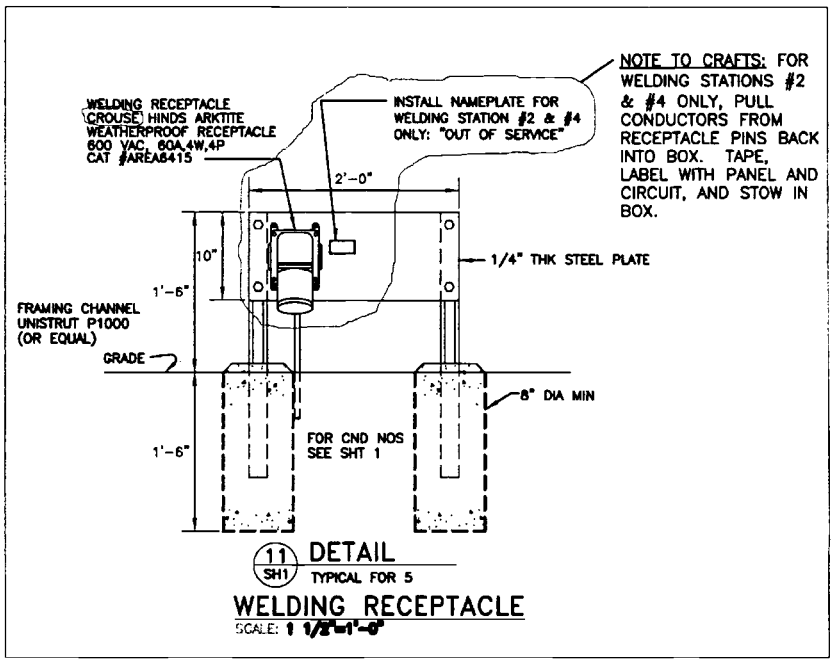

ENGINEERING CHANGE NOTICE CONTINUATION SHEET PAGE 11 OF 11	1a. ECN 726275 R0 1b. Proj. ECN: N/A

Document/Drawing No. H-2-90477 Sheet 1 Revision 13

WAS:

47	2/C	12	3	2	INSTR PNL TK-AP-101	TRENCH,RLY CAB #1,241-AP-271 BLDG,TB-1,P290,DB,P273	TBX-AC, EXTERIOR BLDG 242-A	ANN-S1L-1,-2
48	3	1/0	4	2	AP271-EDS-MCC-001	TRENCH,P252	PANELBOARD AP271-EDS-DP-104	A,B,C;GND
49	4	12		2	HEAT PUMP SHUT DOWN CONTACTOR-HPSC	P288,TRENCH,P267	HEAT PMP HP-1 DS EXT BLDG 241-AP-271	HP-1-T1,-T2,-T3;GND
50	3	14	10	2	PANELBOARD AP271-EDS-DP-104	P253,TRENCH,P15,H-1,P136	WELDING RCPT #1	B-1-H1,-H2,-H3;GND
51	3	14	10	2	PANELBOARD AP271-EDS-DP-104	P253,TRENCH,P15,H-1,P28,H-2,P173	WELDING RCPT #2	B-7-H1,-H2,-H3;GND
52	3	14	10	2	PANELBOARD AP271-EDS-DP-104	P253,TRENCH,P15,H-1,P29,H-2,P43,H-3,P49,H-4,P54	WELDING RCPT #3	B-13-H1,-H2,-H3;GND
53	3	14	10	2	PANELBOARD AP271-EDS-DP-104	P253,TRENCH,P15,H-1,P33,H-2,P441,H-3,P50,H-4,P61,H-5,P65	WELDING RCPT #4	B-19-H1,-H2,-H3;GND
54	4/C	10	3		PANELBOARD AP271-EDS-DP-104	P253,TRENCH,P15,H-1,P133	IMPACT WRENCH STATION #1	B-2-H1,-H2,-H3;GND
55	4/C	10	3		PANELBOARD AP271-EDS-DP-104	P253,TRENCH,P15,H-1,P28,H-2,P189	IMPACT WRENCH STATION #2	B-8-H1,-H2,-H3;GND
56	4/C	10	3		PANELBOARD AP271-EDS-DP-104	P253,TRENCH,P15,H-1,P29,H-2,P43,H-3,P49,H-4,P53	IMPACT WRENCH STATION #3	B-14-H1,-H2,-H3;GND
57	4/C	10	3		PANELBOARD AP271-EDS-DP-104	P253,TRENCH,P15,H-1,P33,H-2,P44,H-3,P50,H-4,P61,H-5,P65	IMPACT WRENCH STATION #4	B-20-H1,-H2,-H3;GND
58	4	12	2		PANELBOARD AP271-EDS-DP-104	3/4" NIPPLE	HEAT PUMP SHUTDOWN CONTACTOR-HPSC	B-25-H1,-H2,-H3;GND
59	3	14	10	2	PANELBOARD AP271-EDS-DP-104	P253,TRENCH,P15,H-1,P29,H-2,P43,H-3,P73,H-10,P181	WELDING RCPT #5	B-31-H1,-H2,-H3;GND
60	4/C	10	3		PANELBOARD AP271-EDS-DP-104	P253,TRENCH,P15,H-1,P29,H-2,P43,H-3,P73,H-10,P100	IMPACT WRENCH STATION #5	B-26-H1,-H2,-H3;GND
61	13	12	2		LEAK DETECTION RELAY ENCLOSURE	TRENCH	INSTR PNL AUX	A-13-14,-15,-16,-17,-N,-4,-5,-6,-7,-8,-9,-10,-11
62	3	250	4	2	AP271-EDS-MCC-001	TRENCH,P256	TRANSFORMER AP241-EDS-XFMR-102	F1-L1,-L2,-L3;GND
6	6	3/0	4	2	TRANSFORMER T4 DISTRIBUTION PNL	P257,TRENCH	HEAT TRACE ENCLOSURE	T4-H1,-H2;GND,T4-H2,-H3;GND,T4-H3,-H1;GND
64	4	12	2	2	LEAK DETECTION RELAY ENCLOSURE	TRENCH	INSTR PNL 241-AP-101	A-11-101-2,A-11-101-3,A-11-101-4,A-11-N

IS:

48	3	1/0	4	2	AP271-EDS-MCC-001	TRENCH,P252	PANELBOARD AP271-EDS-DP-104	A,B,C;GND
49	4	12		2	HEAT PUMP SHUT DOWN CONTACTOR-HPSC	P288,TRENCH,P267	HEAT PMP HP-1 DS EXT BLDG 241-AP-271	HP-1-T1,-T2,-T3;GND
50	3	14	10	2	PANELBOARD AP271-EDS-DP-104	P253,TRENCH,P15,H-1,P136	WELDING RCPT #1	B-1-H1,-H2,-H3;GND
51	3	14	10	2	PANELBOARD AP271-EDS-DP-104	P253,TRENCH,P15,H-1,P28,H-2,P173	WELDING RCPT #2	B-7-H1,-H2,-H3;GND (DISCONNECTED AT BOTH ENDS AND LEFT SPARE)
52	3	14	10	2	PANELBOARD AP271-EDS-DP-104	P253,TRENCH,P15,H-1,P29,H-2,P43,H-3,P49,H-4,P54	WELDING RCPT #3	B-13-H1,-H2,-H3;GND
53	3	14	10	2	PANELBOARD AP271-EDS-DP-104	P253,TRENCH,P15,H-1,P33,H-2,P441,H-3,P50,H-4,P61,H-5,P65	WELDING RCPT #4	B-19-H1,-H2,-H3;GND (DISCONNECTED AT BOTH ENDS AND LEFT SPARE)
54	4/C	10	3		PANELBOARD AP271-EDS-DP-104	P253,TRENCH,P15,H-1,P133	IMPACT WRENCH STATION #1	B-2-H1,-H2,-H3;GND (DISCONNECTED AT BOTH ENDS AND LEFT SPARE)
55	4/C	10	3		PANELBOARD AP271-EDS-DP-104	P253,TRENCH,P15,H-1,P28,H-2,P189	IMPACT WRENCH STATION #2	B-8-H1,-H2,-H3;GND (DISCONNECTED AT BOTH ENDS AND LEFT SPARE)
56	4/C	10	3		PANELBOARD AP271-EDS-DP-104	P253,TRENCH,P15,H-1,P29,H-2,P43,H-3,P49,H-4,P53	IMPACT WRENCH STATION #3	B-14-H1,-H2,-H3;GND (DISCONNECTED AT BOTH ENDS AND LEFT SPARE)
57	4/C	10	3		PANELBOARD AP271-EDS-DP-104	P253,TRENCH,P15,H-1,P33,H-2,P44,H-3,P50,H-4,P61,H-5,P65	IMPACT WRENCH STATION #4	B-20-H1,-H2,-H3;GND (DISCONNECTED AT BOTH ENDS AND LEFT SPARE)
58	4	12	2		PANELBOARD AP271-EDS-DP-104	3/4" NIPPLE	HEAT PUMP SHUTDOWN CONTACTOR-HPSC	B-25-H1,-H2,-H3;GND
59	3	14	10	2	PANELBOARD AP271-EDS-DP-104	P253,TRENCH,P15,H-1,P29,H-2,P43,H-3,P73,H-10,P181	WELDING RCPT #5	B-31-H1,-H2,-H3;GND
60	4/C	10	3		PANELBOARD AP271-EDS-DP-104	P253,TRENCH,P15,H-1,P29,H-2,P43,H-3,P73,H-10,P100	IMPACT WRENCH STATION #5	B-26-H1,-H2,-H3;GND (DISCONNECTED AT BOTH ENDS AND LEFT SPARE)
61	13	12	2		LEAK DETECTION RELAY ENCLOSURE	TRENCH	INSTR PNL AUX	A-13-14,-15,-16,-17,-N,-4,-5,-6,-7,-8,-9,-10,-11
62	3	250	4	2	AP271-EDS-MCC-001	TRENCH,P256	TRANSFORMER AP241-EDS-XFMR-102	F1-L1,-L2,-L3;GND
6	6	3/0	4	2	TRANSFORMER T4 DISTRIBUTION PNL	P257,TRENCH	HEAT TRACE ENCLOSURE	T4-H1,-H2;GND,T4-H2,-H3;GND,T4-H3,-H1;GND
64	4	12	2	2	LEAK DETECTION RELAY ENCLOSURE	TRENCH	INSTR PNL 241-AP-101	A-11-101-2,A-11-101-3,A-11-101-4,A-11-N
65	4	12	2	2	LEAK DETECTION RELAY ENCLOSURE	TRENCH	INSTR PNL 241-AP-102	A-11-102-2,A-11-102-3,A-11-102-4,A-11-N

Task# WRPS-PER-2008-0167.12

E-STARS[R] Report
Task Detail Report
07/08/2009 0937

TASK INFORMATION			
Task#	WRPS-PER-2008-0167.12		
Subject	WRPS-PER-2008-0167; RES; Perform work package TFC-WO-08-2309. Deliverable: Copy of work record. Reference: Issue 8.1.4 AP Farm		
Parent Task#	WRPS-PER-2008-0167	**Status**	Open
Reference	WRPS-PER-2008-0167	**Due**	09/13/2009
Originator	^PER CAs	**Priority**	Medium
Originator Phone		**Category**	PER
Origination Date	12/30/2008 0929	**Generic1**	None
Remote Task#		**Generic2**	None
Deliverable	PER Review	**Generic3**	None
Class	None	**View Permissions**	Global
Instructions	*No Instructions*		

ROUTING LISTS

1	Corrective Action	Active
	Perform work package TFC-WO-08-2309. Deliverable: Copy of work record. Reference: Issue 8.1.4 AP Farm RESPONSIBLE MANAGER: When this corrective action is complete, enter a closure statement in E-STARS and close the E-STARS subtask. Refer to the Problem Evaluation Request procedure TFC-ESHQ-Q-C-C-01, Section 4.4 for closure documentation requirements	
	• Brooks, Rocky L - Assign - Awaiting Response - Due Date - 09/07/2009 0000 *Instructions:*	
	• Knight, Mark A - Review - Awaiting Response - Due Date - 09/11/2009 0000 *Instructions:*	

ATTACHMENTS

Attachments	1. DNFSB Electrical Letter Attachment.pdf 2. DNFSB Electrical Letter.pdf 3. Link to PER 4. RE_ WRPS-PER-2008-0167 _RES_.msg 5. WRPS-PER-2008-0167 EVENT & CAUSAL FACTORING CHART.pdf

COMMENTS

No Comments

TASK DUE DATE HISTORY

Modified	12/30/2008 0929 - ^PER CAs	**New Due Date**	09/13/2009 0000
Modified	12/30/2008 0929 - ^PER CAs	**New Due Date**	10/03/2009 0000

SUB TASK HISTORY

No Subtasks

-- end of report --

Task# WRPS-PER-2008-0167.13

E-STARS[R] Report
Task Detail Report
07/08/2009 0938

TASK INFORMATION			
Task#	WRPS-PER-2008-0167.13		
Subject	WRPS-PER-2008-0167; RES; Ensure ECN-726031-R0 in support of Work Package TFC-WO-08-2656 is released. Deliverable: Electronic copy of released ECN.		
Parent Task#	WRPS-PER-2008-0167	**Status**	CLOSED 01/08/2009
Reference	WRPS-PER-2008-0167	**Due**	01/27/2009
Originator	^PER CAs	**Priority**	Medium
Originator Phone		**Category**	PER
Origination Date	12/30/2008 0929	**Generic1**	None
Remote Task#		**Generic2**	None
Deliverable	PER Review	**Generic3**	None
Class	None	**View Permissions**	Global
Instructions	*No Instructions*		

ROUTING LISTS

1	Corrective Action	Inactive
	Ensure ECN-726031-R0 in support of Work Package TFC-WO-08-2656 is released. Deliverable: Electronic copy of released ECN. Reference: Issue 8.1.5 AP Farm RESPONSIBLE MANAGER: When this corrective action is complete, enter a closure statement in E-STARS and close the E-STARS subtask. Refer to the Problem Evaluation Request procedure TFC-ESHQ-Q-C-C-01, Section 4.4 for closure documentation requirements	
	• Nelson, Rick E - Assign - Completed with comments - 01/08/2009 1018 *Instructions:*	
	• Knight, Mark A - Review - Concur with comments - 01/08/2009 1019 *Instructions:*	

ATTACHMENTS

Attachments	1. DNFSB Electrical Letter Attachment.pdf 2. DNFSB Electrical Letter.pdf 3. Link to PER 4. RE_ WRPS-PER-2008-0167 _RES_.msg 5. WRPS-PER-2008-0167 EVENT & CAUSAL FACTORING CHART.pdf 6. WRPS-PER-2008-0167.13 CLOSURE ECN-726031-R0.pdf

COMMENTS

Poster	Nelson, Rick E (Bragg, David A) - 01/08/2009 1018
	Completed
	REQUIRED ACTION IS COMPLETED. SEE ATTACHMENT OF ECN-726031-R0 FOR OBJECTIVE EVIDENCE. PER ORIGINATOR DECLINED INVOLVEMENT IN THE DISPOSITION OF THIS PER.
Poster	Knight, Mark A (Bragg, David A) - 01/08/2009 1019
	Concur
	ECN-726031-R0 WAS RELEASED AND IS ATTACHED AS OBJECTIVE EVIDENCE. PER ORIGINATOR DECLINED INVOLVEMENT IN THE DISPOSITION OF THIS PER. ACTION IS

Task# WRPS-PER-2008-0167.13			
	COMPLETE.		
Poster	^PER CAs (Owen, Annette) - 01/08/2009 1347		
	CLOSED		
	Closure statement and attached documentation are adequate to close this action.		
TASK DUE DATE HISTORY			
Modified	12/30/2008 0929 - ^PER CAs	**New Due Date**	01/27/2009 0000
Modified	12/30/2008 0929 - ^PER CAs	**New Due Date**	10/03/2009 0000
SUB TASK HISTORY			
No Subtasks			

-- end of report --

S

CH2M HILL ENGINEERING CHANGE NOTICE	1a. ECN 726031 R 0
Page 1 of 6 ☐ DM ☒ FM ☐ TM	1b. Proj. ECN - - R

2. Simple Modification ☒ Yes ☐ No	3. Design Inputs – For full ECNs, record information on the ECN-1 Form (not required for Simple Modifications)		4. Date 12/2/2008
5. Originator's Name, Organization, MSIN, & Phone No. Rick Nelson, BO Eng., S5-07, 372.9706	6. PrHA Number No. 00592 R - 0 ☒ N/A	7. USQ Number No. TF-08 1962-DR-0 ☐ N/A	8. Related ECNs N/A
9. Title Disconnect/ remove the load from panel AP273-EDS-DP-108 associated with the Glycol system	10. Bldg. / Facility No. AP273	11. Equipment / Component ID AP273-EDS-DP-108	12. Approval Designator N/A
13. Engineering Documents/Drawings to be Changed (Incl. Sheet & Rev. Nos.) H-14-030003 Sht. 2 Rev 13 and H-14-030003 Sht. 14 Rev 3		14. Safety Designation ☐ SC ☐ SS ☒ GS ☐ N/A	15. Expedited/Off-Shift ECN? ☐ Yes ☒ No
16a. Work Package Number TFC-08-2656	16b. Modification Work Completed Responsible Engineer / Date	16c. Restored to Original Status (TM) N/A Responsible Engineer / Date	17. Fabrication Support ECN? ☐ Yes ☒ No

18. **Description of the Change** (Use ECN Continuation pages as needed)
Problem: RPP-RPT-38265 item 8.1.5 of AP Farm states the calculated load flow current on the glycol chiller feeders on the load side of disconnect AP273-GLY-DS-101 exceeds the ampacity of the #10 AWG wire feeder conductors.
Solution: Disconnect the loads for the glycol chiller per the attached design media. Tape and safe off the leads for circuit 1, 7, and 8 in panel AP273-EDS-DP-108, removal of the equipment to be performed at a later date as directed by Facility Operations.

Analysis: It is recommended as a result of this Design Modification that RPP-8182 be re-run to capture these changes. These changes as designed will have no adverse effect on loading of this buss; it will in fact lower the loading on MCC-003 in AP Farm.

H-14-030003 Sht 2 shows the removal of the connected load
H-14-030003 Sht 14 shows the loads disconnected from the supply breakers in panel AP273-EDS-DP-108

19. **Justification of the Change** (Use ECN Continuation pages as needed)
Engineering Rework ☐ Yes ☒ No
Training Impact ☐ Yes ☒ No

Per Facility Operations (Rocky Brooks) these loads supplying power for the glycol chiller are currently not being used with no plans in the future for them to be put back in service. Disconnecting these loads will correct the problem identified in RPP-RPT- 38265 item 8.1.5 of AP farm.

20. **ECN Category**
☐ Direct Revision
☒ Supplemental
☐ Void/Cancel

ECN Type
☐ Supersedure
☐ Revision

21. **Distribution**

Name	MSIN	Name	MSIN
Mark Roberts	S5-07		
Ken Ewer	S5-07		
Robert Nicholson	S5-25		

Release Stamp
DATE: DEC 29 2008
STA: 4
HANFORD RELEASE
ID: 2

A-6003-563.1 (REV 6)

CH2M HILL ENGINEERING CHANGE NOTICE	1a. ECN 726031 R 0
Page 2 of 6 ☐ DM ☒ FM ☐ TM	1b. Proj. ECN - - R

22. Revisions Planned (Include a brief description of the contents of each revision)

N/A

Note: All revisions shall have the approvals of the affected organizations as identified in block 12 "Approval Designator," on page 1 of this ECN.

23. Commercial Grade Item Dedication Numbers (associated with this design change)

N/A

24. Engineering Data Transmittal Numbers (associated with this design change, e.g., new drawings, new documents)

N/A

25. Other Non Engineering (not in HDCS) documents that need to be modified due to this change

Type of Document	Document Number	Update Completed On	Responsible Engineer (print/sign and date)
Alarm Response Procedure	N/A		
Operations Procedure	N/A		
Maintenance Procedure	N/A		

26. Field Change Notice(s) Used?

☐ **Yes** ☒ **No**

If Yes, Record Information on the ECN-2 Form, attach form(s), include a description of the interim resolution on ECN Page 1, block 18, and identify permanent changes.

NOTE: ECNs are required to record and approve all FCNs issued. If the FCNs have not changed the original design media then they are just incorporated into the design media via an ECN. If the FCN did change the original design media then the ECN will include the necessary engineering changes to the original design media.

27. Design Verification Required?

☐ **Yes** ☒ **No**

If Yes, as a minimum attach the one page checklist from TFC-ENG-DESIGN-P-17.

28. Approvals

Facility/Project Signatures		Date	A/E Signatures		Date
Resp. Engineer	Rick Nelson	12/2/08	Originator/Design Agent		
Resp. Manager	Mark Roberts	12/19/08	Professional Engineer		
Quality Assurance			Project Engineer		
IS&H Engineer			Quality Assurance		
NS&L Engineer			Safety		
Environ. Engineer			Designer		
Engineering Checker	Ken Ewer	12/3/08	Environ. Engineer		
Other			Other		
Other			Other		
Other			DEPARTMENT OF ENERGY / OFFICE OF RIVER PROTECTION		
Other			Signature or a Control Number that tracks the Approval Signature		
Other					
Other			ADDITIONAL SIGNATURES		
Other					
Other					

CH2MHill ENGINEERING CHANGE NOTICE CONTINUATION SHEET	☐ DM	1a. ECN-726031 R0
Page 3 of 6	☒ FM	1b. Proj. ECN N/A
	☐ TM	

WAS:

Document/Drawing No. H-14-030003 Sheet 14 Revision 3

(Note: A separate ECN Continuation page shall be used for each document/drawing to be modified.)

PANEL MFG: GENERAL ELECTRIC
PANEL TYPE (MODEL): AEF318218
MAIN BRKR TYPE: NA

PANELBOARD: AP273-EDS-DP-108 LOCATION: OUTSIDE COMPRESSOR BLDG
FED FROM: AP273-EDS-DS-102

VOLTAGE: 480Y/277 VAC, 3PH, 4W
ONE LINE DWG NO: H-14-030003, SH 2

FEEDER BRKR TYPE: NA
MAIN BRKR RATING (AIC): NA
FEEDER BRKR RATING (AIC): NA

NEMA TYPE: 3R
■ SURFACE MOUNT
☐ FLUSH MOUNT

☐ MAIN BREAKER
■ LUGS ONLY
☐ TOP ■ BOTTOM FEED

225 AMP BUS
AMP NEUT
■ GROUND BUS

☐ PANELBOARD GROUND FAULT PROTECTION
☐ OTHER

REMARKS	SCHEME NUMBER	WATTS/HP PH A	PH B	PH C	LOAD DESCRIPTION	SYS NO.	CKT NO.	A	B	C	CKT NO.	SYS NO.	LOAD DESCRIPTION	WATTS/HP PH A	PH B	PH C	SCHEME NUMBER	REMARKS
SEE SHEET 2 FOR FOR DISCONNECT SWITCH FED FROM THIS BREAKER		6668			GLYCOL CHILLER		1	50A		40A	2		AP815-EDS-DP-109	7080				SEE SHEET 2 FOR FOR DISCONNECT SWITCH FED FROM THIS BREAKER
			6656		COMPRESSOR AP273-GLY-CMP-001								CHANGE TRAILER		6420			
				6686	FANS AP273-GLY-F-102 & 103						8		SPACE			–		
		531			GLYCOL HX COOLING FAN		7	15A		15A	9		GLYCOL PUMPS	430				
			531		AP273-GLY-F-101								AP273-GLY-P-001 & 002		430			
				531												430		
		–			SPARE		13	15A		15A	14		SPARE	–				
			–												–			
				–												–		
	SUBTOTAL	7197	7197	7197									SUBTOTAL	7490	6850	430		

TOTAL WATTS PHASE A: 14,687
TOTAL WATTS PHASE B: 14,047
TOTAL WATTS PHASE C: 7827
TOTAL: 36,361

FOR FIELD VERIFICATION STATUS SEE

ESSENTIAL DRAWING

REF NUMBER	TITLE
SEE SHEET 1	

REFERENCE

NEXT USED ON H-14-030003, SH 5

REV NO	DESCRIPTION	ORR 10/04			
3	REVISED PER ECN 721904-R0, 722156-R0.				

REVISIONS

CADFILE CADCODE

		DATE
DRAWN	T WALDO II	6/94
CHECKED	G. TILLEY	6/94
DFTG APVD	BJ WILLIAMS	6/94
COG ENGR	RE LARSON	6/94
APPVD	WF WHITE	6/94
APPVD		
APPVD		

U.S. DEPARTMENT OF ENERGY
Office of River Protection

ELECTRICAL (EDS)
PANELBOARD SCHEDULE

SIZE	BLDG NO	INDEX NO	DWG NO	REV
B	241AP	7304	H-14-030003	3

SCALE NONE EDT 607413 SHEET 14 OF

PLOTID

A-6003-565 (01/03)

CH2MHill ENGINEERING CHANGE NOTICE CONTINUATION SHEET

Page 4 of 6

☐ DM
☒ FM
☐ TM

1a. ECN-726031 R0

1b. Proj. ECN N/A

IS:

Document/Drawing No. H-14-030003 Sheet 14 Revision 3

(Note: A separate ECN Continuation page shall be used for each document/drawing to be modified.)

PANEL MFG: GENERAL ELECTRIC
PANEL TYPE (MODEL): AEF31821B
MAIN BRKR TYPE: NA

PANELBOARD: AP273-EDS-DP-109 LOCATION: OUTSIDE COMPRESSOR BLDG
FED FROM: AP273-EDS-DS-102

VOLTAGE: 480Y/277 VAC, 3PH, 4W
ONE LINE DWG NO: H-14-030003, SH 2

NEMA TYPE: 3R
■ SURFACE MOUNT
☐ FLUSH MOUNT

☐ MAIN BREAKER
■ LUGS ONLY
☐ TOP ■ BOTTOM FEED

225 AMP BUS
AMP NEUT
■ GROUND BUS

☐ PANELBOARD GROUND FAULT PROTECTION
☐ OTHER

FEEDER BRKR TYPE: NA
MAIN BRKR RATING (AIC): NA
FEEDER BRKR RATING (AIC): NA

REMARKS	SCHEME NUMBER	WATTS/HP PH A	WATTS/HP PH B	WATTS/HP PH C	LOAD DESCRIPTION	SYS NO.	CKT NO.	A	B	C	CKT NO.	SYS NO.	LOAD DESCRIPTION	WATTS/HP PH A	WATTS/HP PH B	WATTS/HP PH C	SCHEME NUMBER	REMARKS
					SPARE		1	50A		40A	2		AP815-EDS-DP-109 CHANGE TRAILER	7060	6420			SEE SHEET 2 FOR FOR DISCONNECT SWITCH FED FROM THIS BREAKER
											6		SPACE			–		
					SPARE		7	15A		15A	8		SPARE					
		–			SPARE		13	15A		15A	14		SPARE	–				
			–												–			
				–												–		
SUBTOTAL													SUBTOTAL	7060	6420			

TOTAL WATTS PHASE A: 7060
TOTAL WATTS PHASE B: 6420
TOTAL WATTS PHASE C: ____
TOTAL: 13480

FOR FIELD VERIFICATION STATUS SEE ■ 1

ESSENTIAL DRAWING

DRAWN	T WALDO II	6/94
CHECKED	G. TILLEY	6/94
DFTG APVD	BJ WILLIAMS	6/94
COG ENGR	RE LARSON	6/94
APPVD	WF WHITE	6/94
APPVD		
APPVD		

U.S. DEPARTMENT OF ENERGY
Office of River Protection

ELECTRICAL (EDS)
PANELBOARD SCHEDULE

SIZE	BLDG NO	INDEX NO	DWG NO	REV
B	241AP	7304	H-14-030003	3

SCALE NONE CDT 607413 SHEET 14 OF

REV NO	DESCRIPTION	REV BY DATE	CHK BY DATE	DFTG APVD DATE	ENGINEER APPROVALS BY/DATE
3	REVISED PER ECN 721904-R0, 722156-R0.	DRR 10/04			

REVISIONS

CADFILE CADCODE

CHK PRINT COMMENT PRINT PLOTTED

REF NUMBER	TITLE
SEE SHEET 1	

REFERENCE

NEXT USED ON H-14-030003, SH 5

ZG/BOC06

DWG NO H-14-030003 SH 14 OF REV 3

A-6003-565 (01/03)

CH2MHill ENGINEERING CHANGE NOTICE CONTINUATION SHEET	☐ DM	1a. ECN-726031 R0
Page 5 of 6	☒ FM	1b. Proj. ECN N/A
	☐ TM	

WAS:

Document/Drawing No. H-14-030003 Sheet 2 Revision 13

(Note: A separate ECN Continuation page shall be used for each document/drawing to be modified.)

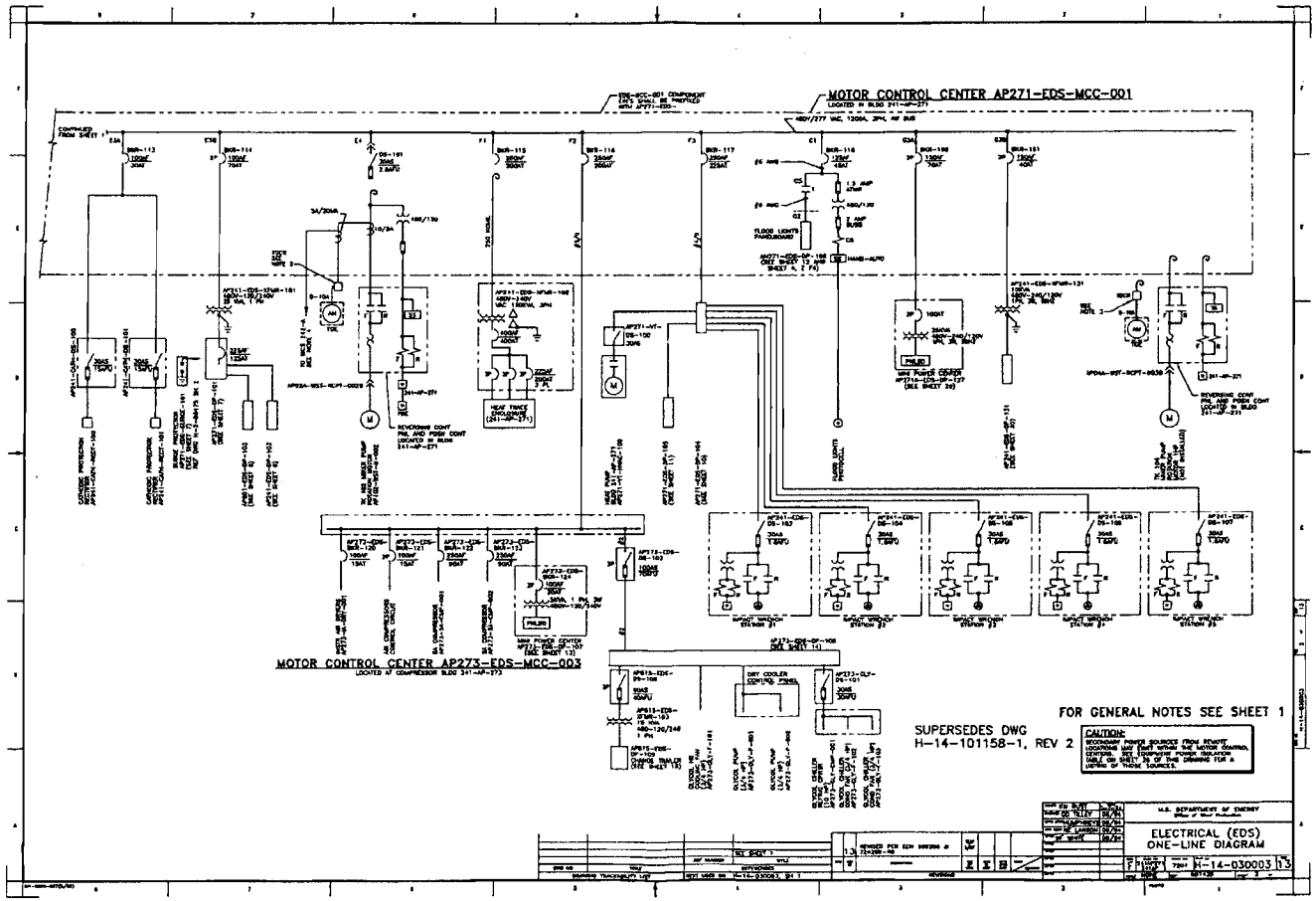

A-6003-565 (01/03)

CH2MHill ENGINEERING CHANGE NOTICE CONTINUATION SHEET	☐ DM	1a. ECN-726031 R0
Page 6 of 6	☒ FM	1b. Proj. ECN N/A
	☐ TM	

IS:

Document/Drawing No. H-14-030003 Sheet 2 Revision 13

(Note: A separate ECN Continuation page shall be used for each document/drawing to be modified.)

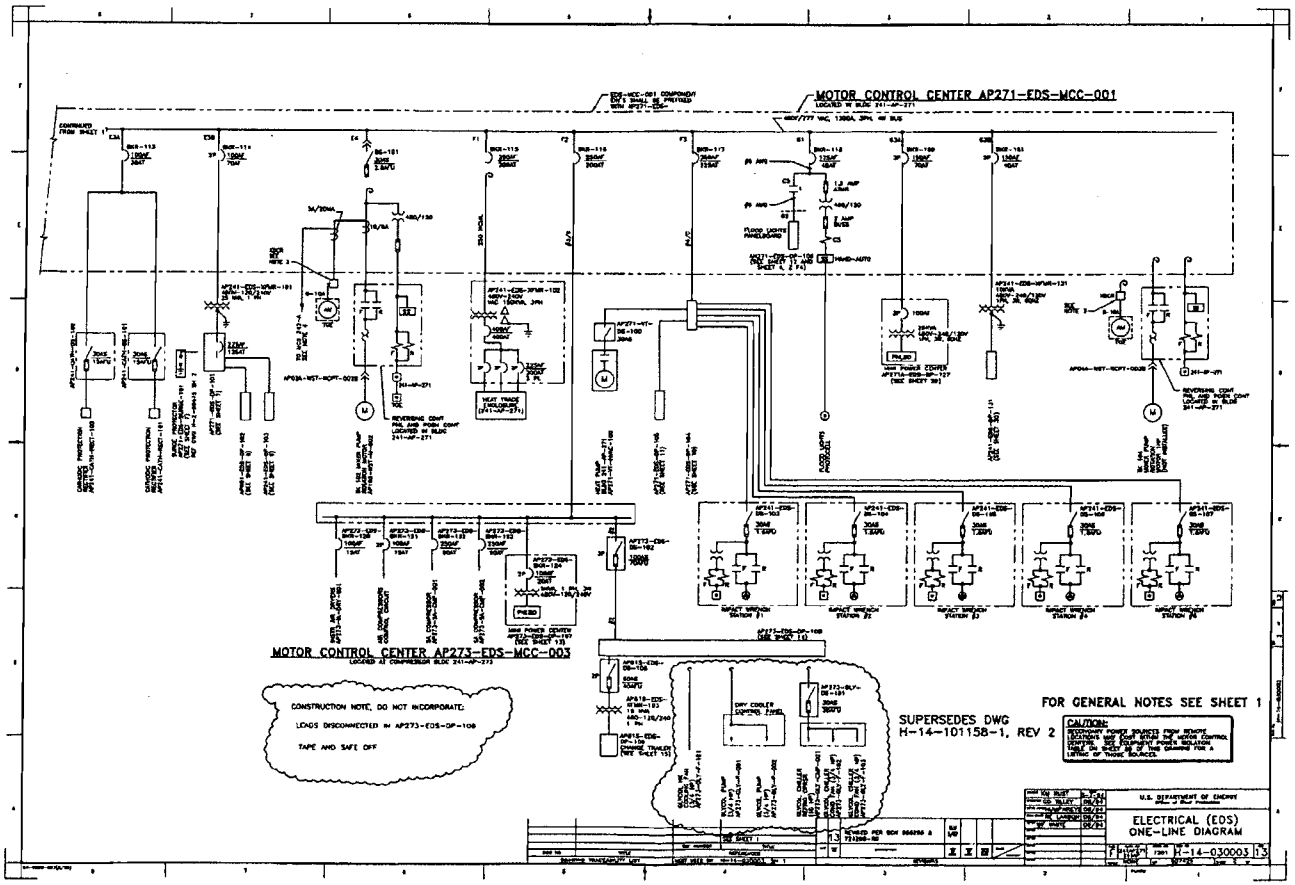

A-6003-565 (01/03)

Task# WRPS-PER-2008-0167.14

E-STARS[R] Report
Task Detail Report
07/08/2009 0939

TASK INFORMATION			
Task#	WRPS-PER-2008-0167.14		
Subject	WRPS-PER-2008-0167; RES; Perform work package Work Package TFC-WO-08-2656 Deliverable: Copy of wo		
Parent Task#	WRPS-PER-2008-0167	**Status**	Open
Reference	WRPS-PER-2008-0167	**Due**	10/07/2009
Originator	^PER CAs	**Priority**	Medium
Originator Phone		**Category**	PER
Origination Date	12/30/2008 0929	**Generic1**	None
Remote Task#		**Generic2**	None
Deliverable	PER Review	**Generic3**	None
Class	None	**View Permissions**	Global
Instructions	*No Instructions*		

ROUTING LISTS		
1	Corrective Action	Active
	Perform work package Work Package TFC-WO-08-2656 Deliverable: Copy of work record. Reference: Issue 8.1.5 AP Farm RESPONSIBLE MANAGER: When this corrective action is complete, enter a closure statement in E-STARS and close the E-STARS subtask. Refer to the Problem Evaluation Request procedure TFC-ESHQ-Q-C-C-01, Section 4.4 for closure documentation requirements	
	• Brooks, Rocky L - Assign - Awaiting Response - Due Date - 09/30/2009 0000 *Instructions:*	
	• Knight, Mark A - Review - Awaiting Response - Due Date - 10/04/2009 0000 *Instructions:*	

ATTACHMENTS	
Attachments	1. DNFSB Electrical Letter Attachment.pdf 2. DNFSB Electrical Letter.pdf 3. Link to PER 4. RE_ WRPS-PER-2008-0167 _RES_.msg 5. WRPS-PER-2008-0167 EVENT & CAUSAL FACTORING CHART.pdf

COMMENTS	
Poster	^PER Coordinator (Owen, Annette) - 06/30/2009 1520
	Due Date Extension
	Extend CA .14 to 9/30/09 per request. The AP Farm outage is not schedule until the middle of August currently, we need more time to complete this action. H Judkins for R Brooks

TASK DUE DATE HISTORY			
Modified	06/30/2009 1520 - ^PER Coordinator	**New Due Date**	09/30/2009 0000
Modified	12/30/2008 0929 - ^PER CAs	**New Due Date**	07/14/2009 0000
Modified	12/30/2008 0929 - ^PER CAs	**New Due Date**	10/03/2009 0000

Task# WRPS-PER-2008-0167.14

SUB TASK HISTORY

No Subtasks

-- end of report --

	SUBWORK_WORKI	SUBWORK_SUBWORKI	SUBWORK_MAPI
1	299250	299250	299248
2	299250	299258	299257
3	299273	299273	299271
4	299273	299281	299280
5	299273	299679	299678
6	299835	299746	299745
7	299835	299835	299834
8	299835	299838	299837
9	299835	299843	299842
10			

	MAP_TITLE
1	()Test Workflow for Steve
2	()Test Workflow for Steve - Read Document - 1 day
3	Test 2 for Steve
4	Test 2 for Steve - Read Document - 5 day
5	Read Document - 5 day - Review
6	sub workflow test
7	Test for Blumer
8	sub-sub map
9	Send for Review Step - Review
10	

Task# WRPS-PER-2008-0167.15

E-STARS[R] Report
Task Detail Report
07/08/2009 1006

TASK INFORMATION			
Task#	WRPS-PER-2008-0167.15		
Subject	WRPS-PER-2008-0167; RES; Perform work package Work Package WDL-111851 Deliverable: Copy of work record. Reference: Issue 8.5.4 AP Farm		
Parent Task#	WRPS-PER-2008-0167	**Status**	Open
Reference	WRPS-PER-2008-0167	**Due**	08/17/2009
Originator	^PER CAs	**Priority**	Medium
Originator Phone		**Category**	PER
Origination Date	12/30/2008 0929	**Generic1**	None
Remote Task#		**Generic2**	None
Deliverable	PER Review	**Generic3**	None
Class	None	**View Permissions**	Global
Instructions	*No Instructions*		

ROUTING LISTS		
1	Corrective Action	Active
	Perform work package Work Package WDL-111851 Deliverable: Copy of work record. Reference: Issue 8.5.4 AP Farm RESPONSIBLE MANAGER: When this corrective action is complete, enter a closure statement in E-STARS and close the E-STARS subtask. Refer to the Problem Evaluation Request procedure TFC-ESHQ-Q-C-C-01, Section 4.4 for closure documentation requirements	
	• Brooks, Rocky L - Assign - Awaiting Response - Due Date - 08/11/2009 0000 *Instructions:*	
	• Knight, Mark A - Review - Awaiting Response - Due Date - 08/15/2009 0000 *Instructions:*	

ATTACHMENTS	
Attachments	1. DNFSB Electrical Letter Attachment.pdf 2. DNFSB Electrical Letter.pdf 3. Link to PER 4. RE_ WRPS-PER-2008-0167 _RES_.msg 5. WRPS-PER-2008-0167 EVENT & CAUSAL FACTORING CHART.pdf

COMMENTS

No Comments

TASK DUE DATE HISTORY			
Modified	12/30/2008 0929 - ^PER CAs	**New Due Date**	08/17/2009 0000
Modified	12/30/2008 0929 - ^PER CAs	**New Due Date**	10/03/2009 0000

SUB TASK HISTORY

No Subtasks

-- end of report --

Task# WRPS-PER-2008-0167.16

E-STARS[R] Report
Task Detail Report
07/08/2009 1006

TASK INFORMATION			
Task#	WRPS-PER-2008-0167.16		
Subject	WRPS-PER-2008-0167; RES; Perform work package Work Package WDL-110917 Deliverable: Copy of work record. Reference: Issue 8.5.4 & 8.5.5.2 AW Farm		
Parent Task#	WRPS-PER-2008-0167	**Status**	Open
Reference	WRPS-PER-2008-0167	**Due**	07/28/2009
Originator	^PER CAs	**Priority**	Medium
Originator Phone		**Category**	PER
Origination Date	12/30/2008 0929	**Generic1**	None
Remote Task#		**Generic2**	None
Deliverable	PER Review	**Generic3**	None
Class	None	**View Permissions**	Global
Instructions	*No Instructions*		

ROUTING LISTS		
1	Corrective Action	Active
	Perform work package Work Package WDL-110917 Deliverable: Copy of work record. Reference: Issue 8.5.4 & 8.5.5.2 AW Farm RESPONSIBLE MANAGER: When this corrective action is complete, enter a closure statement in E-STARS and close the E-STARS subtask. Refer to the Problem Evaluation Request procedure TFC-ESHQ-Q-C-C-01, Section 4.4 for closure documentation requirements	
	• Brooks, Rocky L - Assign - Awaiting Response - Due Date - 07/22/2009 0000 *Instructions:*	
	• Knight, Mark A - Review - Awaiting Response - Due Date - 07/26/2009 0000 *Instructions:*	

ATTACHMENTS

Attachments

1. DNFSB Electrical Letter Attachment.pdf
2. DNFSB Electrical Letter.pdf
3. Link to PER
4. RE_ WRPS-PER-2008-0167 _RES_.msg
5. WRPS-PER-2008-0167 EVENT & CAUSAL FACTORING CHART.pdf

COMMENTS

No Comments

TASK DUE DATE HISTORY			
Modified	12/30/2008 0929 - ^PER CAs	**New Due Date**	07/28/2009 0000
Modified	12/30/2008 0929 - ^PER CAs	**New Due Date**	10/03/2009 0000

SUB TASK HISTORY

No Subtasks

-- end of report --

Task# WRPS-PER-2008-0167.17

E-STARS[R] Report
Task Detail Report
07/08/2009 1006

TASK INFORMATION			
Task#	WRPS-PER-2008-0167.17		
Subject	WRPS-PER-2008-0167; RES; Action: Perform work package to replace breaker 101 in AP Farm (reference n		
Parent Task#	WRPS-PER-2008-0167	**Status**	Open
Reference	WRPS-PER-2008-0167	**Due**	10/07/2009
Originator	^PER CAs	**Priority**	Medium
Originator Phone		**Category**	PER
Origination Date	12/30/2008 0929	**Generic1**	None
Remote Task#		**Generic2**	None
Deliverable	PER Review	**Generic3**	None
Class	None	**View Permissions**	Global
Instructions	*No Instructions*		

ROUTING LISTS		
1	Corrective Action	Active
	Action: Perform work package to replace breaker 101 in AP Farm (reference new work request TFC-WR-08-2310). Deliverable: Copy of work record. Reference: Issue 8.7.7 AW Farm RESPONSIBLE MANAGER: When this corrective action is complete, enter a closure statement in E-STARS and close the E-STARS subtask. Refer to the Problem Evaluation Request procedure TFC-ESHQ-Q-C-C-01, Section 4.4 for closure documentation requirements	
	• Brooks, Rocky L - Assign - Awaiting Response - Due Date - 09/30/2009 0000 *Instructions:*	
	• Knight, Mark A - Review - Awaiting Response - Due Date - 10/04/2009 0000 *Instructions:*	

ATTACHMENTS	
Attachments	1. DNFSB Electrical Letter Attachment.pdf 2. DNFSB Electrical Letter.pdf 3. Link to PER 4. RE_ WRPS-PER-2008-0167 _RES_.msg 5. WRPS-PER-2008-0167 EVENT & CAUSAL FACTORING CHART.pdf

COMMENTS	
Poster	^PER Coordinator (Owen, Annette) - 06/30/2009 1521
	Due Date Extension
	Extend CA .17 to 9/30/09 per request. The AP Farm outage is not schedule until the middle of August currently, we need more time to complete this action. H Judkins for R Brooks

TASK DUE DATE HISTORY			
Modified	06/30/2009 1521 - ^PER Coordinator	**New Due Date**	09/30/2009 0000
Modified	12/30/2008 0929 - ^PER CAs	**New Due Date**	07/21/2009 0000
Modified	12/30/2008 0929 - ^PER CAs	**New Due Date**	10/03/2009 0000

Task# WRPS-PER-2008-0167.17

SUB TASK HISTORY

No Subtasks

-- end of report --

Task# WRPS-PER-2008-0167.18

E-STARS[R] Report
Task Detail Report
07/08/2009 1007

TASK INFORMATION			
Task#	WRPS-PER-2008-0167.18		
Subject	WRPS-PER-2008-0167; RES; Ensure ECN in support of Work Package associated with new work request TFC-WR-08-2310 is released. Deliverable: Electronic		
Parent Task#	WRPS-PER-2008-0167	**Status**	CLOSED 04/24/2009
Reference	WRPS-PER-2008-0167	**Due**	04/29/2009
Originator	^PER CAs	**Priority**	Medium
Originator Phone		**Category**	PER
Origination Date	12/30/2008 0929	**Generic1**	None
Remote Task#		**Generic2**	None
Deliverable	PER Review	**Generic3**	None
Class	None	**View Permissions**	Global
Instructions	*No Instructions*		

ROUTING LISTS		
1	Corrective Action	Inactive
	Ensure ECN in support of Work Package associated with new work request TFC-WR-08-2310 is released. Deliverable: Electronic copy of released ECN. Reference: Issue 8.7.7 AW Farm RESPONSIBLE MANAGER: When this corrective action is complete, enter a closure statement in E-STARS and close the E-STARS subtask. Refer to the Problem Evaluation Request procedure TFC-ESHQ-Q-C-C-01, Section 4.4 for closure documentation requirements	
	• Nelson, Rick E - Assign - Completed with comments - 04/23/2009 1630 *Instructions:*	
	• Knight, Mark A - Review - Concur with comments - 04/23/2009 1631 *Instructions:*	

ATTACHMENTS	
Attachments	1. DNFSB Electrical Letter Attachment.pdf 2. DNFSB Electrical Letter.pdf 3. Link to PER 4. RE_ WRPS-PER-2008-0167 _RES_.msg 5. WRPS-PER-2008-0167 EVENT & CAUSAL FACTORING CHART.pdf 6. WRPS-PER-2008-0167.18 CLOSURE ECN-726325-R0.pdf

COMMENTS	
Poster	Nelson, Rick E (Bragg, David A) - 04/23/2009 1630
	Completed
	ECN-726325-R0 was released on 04/23/09 completing this action. See attachment for objective evidence. The PER originator has declined involvement in the disposition of corrective actions associated with WRPS-PER-2008-0167.
Poster	Knight, Mark A (Bragg, David A) - 04/23/2009 1631

Task# WRPS-PER-2008-0167.18

Editor	Bragg, David A (Knight, Mark A) - 04/23/2009 1641		
	Concur		
	ECN-726325-R0 was released on 04/23/09 completing this action. For information only - note that the subject ECN references work package TFC-WO-08-2310 instead of "TFC-WO-08-2312" as cited in the corrective action. The later reference was a minor typo. The ECN cites the correct work package number. See attachment for objective evidence of the released ECN. The PER originator has declined involvement in the disposition of corrective actions associated with WRPS-PER-2008-0167.		
Poster	^PER CAs (Owen, Annette) - 04/24/2009 0812		
	CLOSED		
	Closure statement and attached documentation are adequate to close this action.		
TASK DUE DATE HISTORY			
Modified	12/30/2008 0929 - ^PER CAs	**New Due Date**	04/29/2009 0000
Modified	12/30/2008 0929 - ^PER CAs	**New Due Date**	10/03/2009 0000
SUB TASK HISTORY			
No Subtasks			

-- end of report --

ENGINEERING CHANGE NOTICE

☐ DM ☒ FM ☐ TM

1a. ECN 726325 R 0

1b. Proj. ECN N/A - - R

2. Simple Modification	3. Design Inputs – For full ECNs, record information on the ECN-1 Form (not required for Simple Modifications)		4. Date
☒ Yes ☐ No			4/10/09
5. Originator's Name, Organization, MSIN, & Phone No.	6. PrHA Number	7. USQ Number	8. Related ECNs
BJ Hickman, S5-25, 373-2265	No. PrHA-00778 R - 0 ☐ N/A	No. TF - 09 - 0630 - D R - 0 ☐ N/A	N/A
9. Title	10. Bldg. / Facility No.	11. Equipment / Component ID	12. Approval Designator
Change Trip Unit on AW Substation Breaker	241AW	AW241-EDS-ENCL-100	N/A
13. Engineering Documents/Drawings to be Changed (Incl. Sheet & Rev. Nos.)		14. Safety Designation	15. Expedited/Off-Shift ECN?
H-14-030002, SH1, Rev. 18		☐ SC ☐ SS ☒ GS ☐ N/A	☐ Yes ☒ No
16a. Work Package Number	16b. Modification Work Completed	16c. Restored to Original Status (TM)	17. Fabrication Support ECN?
TFC-WO-082310	Responsible Engineer / Date	N/A Responsible Engineer / Date	☐ Yes ☒ No

18. **Description of the Change** (Use ECN Continuation pages as needed)

PROBLEM IDENTIFICATION: According to RPP-8183, the potential arc flash incident energy at BKR-100 and at MCC-001 at AW Substation is at least 40 cal/cm^2. According to NFPA 70E, this incident energy is extremely dangerous and mandates Category 4 PPE.

SOLUTION: RPP-8183 indicates that the BKR-100 trip unit does not currently have a short time pickup and delay settings, and the addition of these features would reduce trip time and decrease arc flash energy substantially. Informal calculations using SMK Power Tools with settings recommended in RPP-8183 indicate that PPE could be reduced from Category 4 to Category 2, which is much safer for maintenance.

19. **Justification of the Change** (Use ECN Continuation pages as needed)

Engineering Rework ☐ Yes ☒ No

Training Impact ☐ Yes ☒ No

Changing the trip unit for BKR-100 to include a short time delay setting has the potential to reduce the arc flash incident energy and allow safer conditions for substation maintenance.

20. **ECN Category**

☐ Direct Revision
☒ Supplemental
☐ Void/Cancel

ECN Type

☐ Supersedure
☐ Revision

21. **Distribution**

Name	MSIN	Name	MSIN
Mark Roberts	S5-07		
Wayne Winkelman	S5-25		
Jeff Kissel	S5-07		
RE Nelson	S5-07		

Release Stamp

APR 23 2009
DATE:
STA: 4
HANFORD RELEASE
ID: 58

ENGINEERING CHANGE NOTICE	1a. ECN 726325 R 0
Page 2 of 4 ☐ DM ☒ FM ☐ TM	1b. Proj. ECN - - R

22. **Revisions Planned** (Include a brief description of the contents of each revision)
N/A

Note: All revisions shall have the approvals of the affected organizations as identified in block 12 "Approval Designator," on page 1 of this ECN.

23. **Commercial Grade Item Dedication Numbers** (associated with this design change)
N/A

24. **Engineering Data Transmittal Numbers** (associated with this design change, e.g., new drawings, new documents)
N/A

25. **Other Non Engineering (not in HDCS) documents that need to be modified due to this change**

Type of Document	Document Number	Update Completed On	Responsible Engineer (print/sign and date)
Alarm Response Procedure	N/A		
Operations Procedure	N/A		
Maintenance Procedure	N/A		
N/A			

26. **Field Change Notice(s) Used?**
☐ **Yes** ☒ **No**
If Yes, Record Information on the ECN-2 Form, attach form(s), include a description of the interim resolution on ECN Page 1, block 18, and identify permanent changes.

NOTE: ECNs are required to record and approve all FCNs issued. If the FCNs have not changed the original design media then they are just incorporated into the design media via an ECN. If the FCN did change the original design media then the ECN will include the necessary engineering changes to the original design media.

27. **Design Verification Required?**
☐ **Yes** ☒ **No**
If Yes, as a minimum attach the one page checklist from TFC-ENG-DESIGN-P-17.

28. **Approvals**

	Facility/Project Signatures	Date		A/E Signatures	Date
Resp. Engineer	Barbara Hickman	4/16/09	Originator/Design Agent		
Resp. Manager	~~Mark Roberts~~ W.M. HARTY	4/16/09	Professional Engineer		
Quality Assurance			Project Engineer		
IS&H Engineer			Quality Assurance		
NS&L Engineer			Safety		
Environ. Engineer			Designer		
Engineering Checker	RE Nelson	4/16/09	Environ. Engineer		
Other			Other		
Other			Other		
Other			DEPARTMENT OF ENERGY / OFFICE OF RIVER PROTECTION		
Other			Signature or a Control Number that tracks the Approval Signature		
Other					
Other			ADDITIONAL SIGNATURES		
Other					
Other					

Circuit Breaker Ordering Information:

1 ea. Eaton Cutler-Hammer Digitrip 510 retrofit kit, for Westinghouse DS-206, 800AF, 600A sensors, with ground fault trip function (Contact Dave McCrosky, Platt Electric, 783-7451)

Circuit Breaker Settings (see RPP-8183, Rev. 1, Section 8.5.4)

Note – The ground fault settings below are based off the existing ground fault relay settings (200A, no delay).

Set BKR-100 as follows:

LTPU = 1.0
LTD = 20.0
STPU = 4.0
STD = 0.3
INST = 12.0

GFPU = 30%
GFD = 0.1 (I^2t out)

Note: An AutoCAD page may be used in place of this form (the header section items must be included on the AutoCAD page).

1a. ECN 726325 R0

1b. Proj. ECN: N/A

Document/Drawing No. H-14-030002 Sheet 1 Revision 18 Zone F5-F7

WAS:

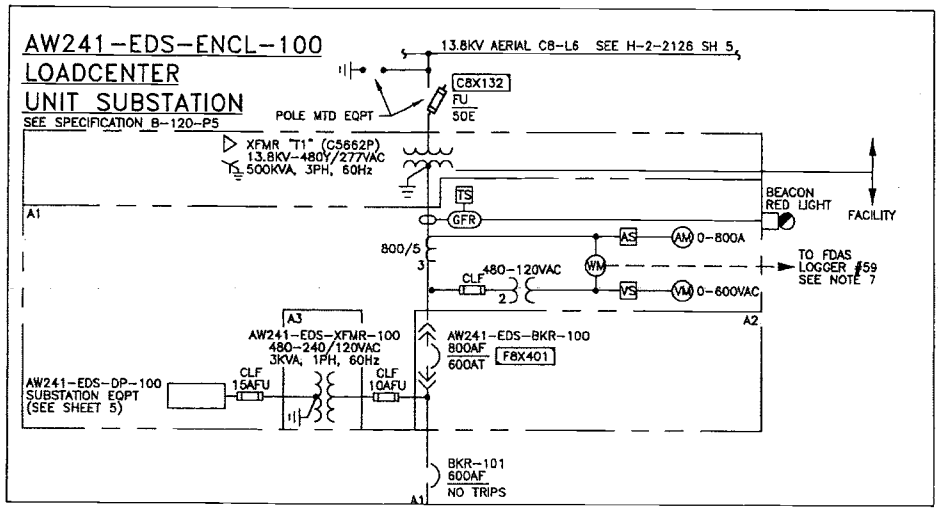

IS:

REMOVE EXISTING GE GROUND FAULT RELAY, BEACON, TEST SWITCH, AND ASSOCIATED EQUIPMENT REQUIRED ONLY FOR THE GROUND FAULT RELAY SYSTEM. DO NOT REMOVE ANY EQUIPMENT OR WIRING THAT MAY AFFECT THE PTs, CTs, METERING EQUIPMENT, HEATERS, OR PHYSICAL OPERATION OF THE CIRCUIT BREAKER.

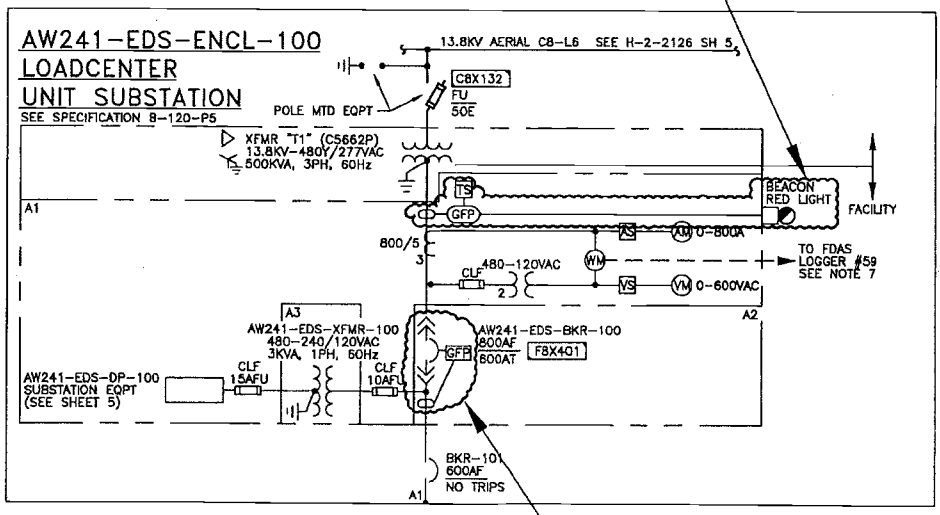

INSTALL 600A BREAKER RETROFIT TRIP KIT, AND SET AS INDICATED ON PAGE 3 OF THIS ECN.

Task# WRPS-PER-2008-0167.19

E-STARS[R] Report
Task Detail Report
07/08/2009 1008

TASK INFORMATION			
Task#	WRPS-PER-2008-0167.19		
Subject	WRPS-PER-2008-0167; RES; Ensure ECN in support of Work Package TFC-WO-08-2312 is released. Deliverable: Electronic copy of released ECN. Referen		
Parent Task#	WRPS-PER-2008-0167	**Status**	CLOSED 03/19/2009
Reference	WRPS-PER-2008-0167	**Due**	03/24/2009
Originator	^PER CAs	**Priority**	Medium
Originator Phone		**Category**	PER
Origination Date	12/30/2008 0929	**Generic1**	None
Remote Task#		**Generic2**	None
Deliverable	PER Review	**Generic3**	None
Class	None	**View Permissions**	Global
Instructions	*No Instructions*		

ROUTING LISTS		
1	Corrective Action	Inactive
	Ensure ECN in support of Work Package TFC-WO-08-2312 is released. Deliverable: Electronic copy of released ECN. Reference: Issue 8.1.2 AY Farm RESPONSIBLE MANAGER: When this corrective action is complete, enter a closure statement in E-STARS and close the E-STARS subtask. Refer to the Problem Evaluation Request procedure TFC-ESHQ-Q-C-C-01, Section 4.4 for closure documentation requirements	
	• Nelson, Rick E - Assign - Completed with comments - 03/18/2009 1449 *Instructions:*	
	• Knight, Mark A - Review - Concur with comments - 03/18/2009 1451 *Instructions:*	

ATTACHMENTS	
Attachments	1. DNFSB Electrical Letter Attachment.pdf 2. DNFSB Electrical Letter.pdf 3. Link to PER 4. RE_ WRPS-PER-2008-0167 _RES_.msg 5. WRPS-PER-2008-0167 EVENT & CAUSAL FACTORING CHART.pdf 6. WRPS-PER-2008-0167.19 CLOSURE E-MAIL DISPOSITION.msg

COMMENTS	
Poster	Nelson, Rick E (Bragg, David A) - 03/18/2009 1449
	Completed
	WRPS-PER-2008-0167.19 required the following action: Ensure ECN in support of Work Package TFC-WO-08-2312 is released. The deliverable was an electronic copy of the released ECN. Engineering has evaluated this issue and dispositioned the equipment is fully "acceptable as is." Therefore, NO ECN changes will be made and work package TFC-WO-08-2312 is NOT required. Please see attached e-mail for engineering justification of the "accept-as-is" disposition.

Task# WRPS-PER-2008-0167.19

	The PER originator has declined involvement in the disposition of WRPS-PER-2008-0167.19.
Poster	Knight, Mark A (Bragg, David A) - 03/18/2009 1451
Editor	Knight, Mark A (Bragg, David A) - 03/18/2009 1453
	Concur
	Engineering has provided justification for accepting the equipment "as-is." No further action is required. The PER originator declined involvement in the disposition of WRPS-PER-2008-0167.19.
Poster	^PER CAs (Owen, Annette) - 03/19/2009 0738
	CLOSED
	Closure statement is adequate to close this action.

TASK DUE DATE HISTORY

Modified	12/30/2008 0929 - ^PER CAs	**New Due Date**	03/24/2009 0000
Modified	12/30/2008 0929 - ^PER CAs	**New Due Date**	10/03/2009 0000

SUB TASK HISTORY

No Subtasks

-- end of report --

Message

From: Nelson, Richard E
Sent: Wednesday, March 18, 2009 2:34 PM
To: Bragg, David A
Subject: FW: TFC-WO-08-2312 & Summary of Distribution Studies Issue # AY 8.1.2

Dave,

for item 167.19.....the following is the disposition.....we are going to close our the work order and after further Engineering Evaluation have determined that the problem is Accept-As-Is

---

From: Ewer, Kenneth L
Sent: Wednesday, February 18, 2009 3:17 PM
To: Nelson, Richard E
Cc: Hamm, Earnest R; Swift, Randy G; Brooks, Rocky L; Roberts, Mark A
Subject: TFC-WO-08-2312 & Summary of Distribution Studies Issue # AY 8.1.2

Rick & others-

Randy Swift and I walked-down the conductors at outside transformer (xfmr-105) and panelboard at AY change trailer (DP-105) today, 2-18-2009. Randy opened the transformer compartment to verify the wire size/type on the secondary. The secondary wire size is #2 AWG, THWN, which is 90*C. However, the circuit is limited to only 60*C by the split bolt connectors that splice at the transformer secondary. Therefore, the secondary conductors are limited to 95 amps. Next size breaker allowed by NEC 240.4 is 100-amp.

Please reconsider the disposition for this NEC issue as I have marked below (the final wording will be up to you). Please also cancel the Work Order, if this disposition is acceptable.

Also, a Document Mod ECN needs to be generated to correct the transformer label (drawing is mislabeled DOES NOT MATCH THE FIELD), but done separately since it is not related to NEC Code compliance issues. I have searched wire run drawings, but cannot find any documentation for #2 AWG wire on xfmr secondary.

8.1.2	Conductor (PTW CBL-DP-105) between transformerXFMR-105 and panel DP-105 is #4 AWG with 60 deg C ampacity of 70A and 75 deg C ampacity of 85A. Downstream main breaker of DP-105 is 100A. The 100A breaker does not provide adequate overcurrent protection for the #4 transformer secondary tap conductors per NEC 240.21 (C).	Decrease main breaker rating to 90A if rated for 75 deg C, 70A if rated for 60 deg C.	~~Field Wor~~ ~~Requirec~~ Field Verification Required

				H-14-030006, sh.7, R. 3

Ken Ewer, 373-5090
WRPS, BO Eng. Electrical Engineer

Task# WRPS-PER-2008-0167.20

E-STARS[R] Report
Task Detail Report
07/08/2009 1009

TASK INFORMATION			
Task#	WRPS-PER-2008-0167.20		
Subject	WRPS-PER-2008-0167; RES; Perform work package TFC-WO-08-2312 Deliverable: Copy of work record. Reference: Issue 8.1.2 AY Farm		
Parent Task#	WRPS-PER-2008-0167	**Status**	CLOSED 04/23/2009
Reference	WRPS-PER-2008-0167	**Due**	06/16/2009
Originator	^PER CAs	**Priority**	Medium
Originator Phone		**Category**	PER
Origination Date	12/30/2008 0929	**Generic1**	None
Remote Task#		**Generic2**	None
Deliverable	PER Review	**Generic3**	None
Class	None	**View Permissions**	Global
Instructions	*No Instructions*		

ROUTING LISTS

1	Corrective Action	Inactive
	Perform work package TFC-WO-08-2312 Deliverable: Copy of work record. Reference: Issue 8.1.2 AY Farm RESPONSIBLE MANAGER: When this corrective action is complete, enter a closure statement in E-STARS and close the E-STARS subtask. Refer to the Problem Evaluation Request procedure TFC-ESHQ-Q-C-C-01, Section 4.4 for closure documentation requirements	
	• Brooks, Rocky L - Assign - Completed with comments - 03/19/2009 0959 *Instructions:*	
	• Knight, Mark A - Review - Concur with comments - 04/22/2009 1323 *Instructions:*	

ATTACHMENTS

Attachments	1. DNFSB Electrical Letter Attachment.pdf 2. DNFSB Electrical Letter.pdf 3. Link to PER 4. RE_ WRPS-PER-2008-0167 _RES_.msg 5. WRPS-PER-2008-0167 EVENT & CAUSAL FACTORING CHART.pdf

COMMENTS

Poster	Brooks, Rocky L - 03/01/2009 1301
	Closure information based on Engineering information
	02-27-09 Engineering has completed a walk down and evaluated the as found conditions and determined the current configuration meets current NEC requirements and the scope of work in this work order is no longer required. Rocky Lee Brooks 241-AN, AP, SY and Transfer System Facility Manager This is the information used to close out work order TFC-08-2312
Poster	Brooks, Rocky L (Skaggs, Kristi) - 03/19/2009 0959

Task# WRPS-PER-2008-0167.20

	Completed
	Please close subject PER based on the following information. WRPS-PER-2008-0167.19, assigned to Rick Nelson, originally required an ECN be developed to support work pkg TFC-WO-08-2312. However, upon completing an engineering review, it was determined that the existing equipment is acceptable as-is. No ECN is required, and the associated work scope in work pkg TFC-WO-08-2312 is uneccessary. Recommend that you disposition the follow-up assigned ESTARS action (WRPS-PER-2008-0167.20) that is assigned to you and close with the disposition that no actions will be taken based on the engineering disposition of WRPS-PER-2008-0167.19. I copied the WRPS-PER-2008-0167.19 disposition below. I will also attach the e-mail that provided the engineering justification for closing out WRPS-PER-2008-0167.19. WRPS-PER-2008-0167.19 required the following action: Ensure ECN in support of Work Package TFC-WO-08-2312 is released. The deliverable was an electronic copy of the released ECN. Engineering has evaluated this issue and dispositioned the equipment is fully "acceptable as is." Therefore, NO ECN changes will be made and work package TFC-WO-08-2312 is NOT required. Please see attached e-mail for engineering justification of the "accept-as-is" disposition.The PER originator has declined involvement in the disposition of WRPS-PER-2008-0167.19. Rocky lee Brooks 241-AN, AP and SY Facility Manager
Poster	Knight, Mark A (Bragg, David A) - 04/22/2009 1323
	Concur
	No action is required for this task, which was based on completion of corrective action WRPS-PER-2008-0167.19. Engineering evaluated the issue associated with WRPS-PER-2008-0167.19 and determined that the equipment is fully "acceptable as is." Therefore, NO ECN changes were made (0167.19) and the work package associated with WRPS-PER-2008-0167.20 (TFC-WO-08-2312) is NOT required. This action may be closed . The PER originator has declined notification in the disposition of corrective actions associated with WRPS-PER-2008-0167.
Poster	^PER CAs (Owen, Annette) - 04/23/2009 0722
	CLOSED
	Closure statement is adequate to close this action.

TASK DUE DATE HISTORY

Modified	12/30/2008 0929 - ^PER CAs	**New Due Date**	06/16/2009 0000
Modified	12/30/2008 0929 - ^PER CAs	**New Due Date**	10/03/2009 0000

SUB TASK HISTORY

No Subtasks

-- end of report --

Task# WRPS-PER-2008-0167.21

E-STARS[R] Report
Task Detail Report
07/08/2009 1009

TASK INFORMATION			
Task#	WRPS-PER-2008-0167.21		
Subject	WRPS-PER-2008-0167; PER; Ensure ECN-726043-R0 in support of work package TFC-WO-08-2313 is released.		
Parent Task#	WRPS-PER-2008-0167	**Status**	CLOSED 02/02/2009
Reference	WRPS-PER-2008-0167	**Due**	02/06/2009
Originator	^PER CAs	**Priority**	Medium
Originator Phone		**Category**	PER
Origination Date	12/30/2008 0929	**Generic1**	None
Remote Task#		**Generic2**	None
Deliverable	PER Review	**Generic3**	None
Class	None	**View Permissions**	Global
Instructions	*No Instructions*		

ROUTING LISTS

1	Corrective Action	Inactive
	Ensure ECN-726043-R0 in support of work package TFC-WO-08-2313 is released. Deliverable: Copy of work record. Reference: Issue 8.1.4 AY Farm RESPONSIBLE MANAGER: When this corrective action is complete, enter a closure statement in E-STARS and close the E-STARS subtask. Refer to the Problem Evaluation Request procedure TFC-ESHQ-Q-C-C-01, Section 4.4 for closure documentation requirements	
	• Nelson, Rick E - Assign - Completed with comments - 01/22/2009 1307 *Instructions:*	
	• Knight, Mark A - Review - Concur with comments - 01/22/2009 1310 *Instructions:*	

ATTACHMENTS

Attachments	1. DNFSB Electrical Letter Attachment.pdf 2. DNFSB Electrical Letter.pdf 3. Link to PER 4. RE_ WRPS-PER-2008-0167 _RES_.msg 5. WRPS-PER-2008-0167 EVENT & CAUSAL FACTORING CHART.pdf 6. WRPS-PER-2008-0167.21 CLOSURE ECN-726043-R0.pdf

COMMENTS

Poster	^PER Coordinator (Owen, Annette) - 01/21/2009 0834
	Due Date Extension
	Corrective Action item - modification to synchronize with E-STARS.'Action Due Date' was changed.
Poster	^PER CAs (Owen, Annette) - 01/21/2009 0836
	1st extension to 1/30/09 per form A-6003-227.
	The subject ECN has been drafted, however additional time is required to complete the USQ before the ECN can be issued. The USQ has been delayed due to the need to support higher

Task# WRPS-PER-2008-0167.21

	priority work (evaporator campaign, waste tranfers). Mark Knight		
Poster	Nelson, Rick E (Bragg, David A) - 01/22/2009 1307		
	Completed		
	The required action was completed. See attached ECN for objective evidence. The PER originator has declined involvement with the disposition of this corrective action.		
Poster	Knight, Mark A (Bragg, David A) - 01/22/2009 1310		
	Concur		
	ECN-726043-R0 was issued on 01/22/09. This completes the corrective action. The PER originator has declined involvement in the disposition of this PER.		
Poster	^PER CAs (Brown, Nancy L) - 02/02/2009 1605		
	CLOSED		
	Reviewed closure statement and attachment -- closed CA		
TASK DUE DATE HISTORY			
Modified	01/21/2009 0835 - ^PER Coordinator	**New Due Date**	01/30/2009 0000
Modified	12/30/2008 0929 - ^PER CAs	**New Due Date**	01/26/2009 0000
Modified	12/30/2008 0929 - ^PER CAs	**New Due Date**	10/03/2009 0000
SUB TASK HISTORY			
No Subtasks			

-- end of report --

ENGINEERING CHANGE NOTICE

☐ DM ☒ FM ☐ TM

1a. ECN 726043 R 0

1b. Proj. ECN N/A - - R

2. Simple Modification ☒ Yes ☐ No	3. Design Inputs – For full ECNs, record information on the ECN-1 Form (not required for Simple Modifications)		4. Date 12/15/08
5. Originator's Name, Organization, MSIN, & Phone No. Kenneth Ewer, BO Maint. Eng, S5-07, 373-5090	6. PrHA Number No. PrHA-00623 R - 0 ☐ N/A	7. USQ Number No. TF - 09 - 0086 - D R - 0 ☐ N/A	8. Related ECNs N/A
9. Title 241AY Lighting Change BRKR 152, 30A to 20A	10. Bldg. / Facility No. 241-AY	11. Equipment / Component ID AY801A-EDS-MCC-001	12. Approval Designator N/A
13. Engineering Documents/Drawings to be Changed (Incl. Sheet & Rev. Nos.) H-14-030006, sh 1 Rev 14; H-2-91044, sh 7, Rev 1		14. Safety Designation ☐ SC ☐ SS ☒ GS ☐ N/A	15. Expedited/Off-Shift ECN? ☐ Yes ☒ No
16a. Work Package Number TFC-WO-08-2313	16b. Modification Work Completed Responsible Engineer / Date	16c. Restored to Original Status (TM) N/A Responsible Engineer / Date	17. Fabrication Support ECN? ☐ Yes ☒ No

18. **Description of the Change** (Use ECN Continuation pages as needed)

GENERAL DESCRIPTION:

The existing wires on load side of AY801A-EDS-BKR-152 (30-amp breaker) in AY801A-EDS-MCC-001 is oversized and thus do not adequately protect the feeder conductors, sized #12AWG, that feed dedicated 5kVA transformers and exterior tank farm lights in AY tank farm. The existing transformers at light poles #1 and #2 have existing secondary fuses, but lack primary overcurrent protection,

SOLUTION:

Replace the existing breaker AY801A-EDS-BKR-152 which is 30A, 2-pole, 480-volt breaker with new 20A, 2-pole, 480-volt breaker in AY801A-EDS-MCC-001. Also, re-configure existing fused-disconnect switches (AY241-EDS-DS-105, DS-106) to primary side of transformers (AY241-EDS-XFMR-102, XFMR-103) with 8 amp rated RK5 fuses. No secondary transformer protection required.

ANALYSIS:

NEC article 240.4(f) allows primary only fuse protection of transformer when the secondary is 2-wire connected (single phase) to load. RPP-RPT-38265, Tank Farm Electrical Distribution Studies, has identifed that the breaker is not sized properly to protect conductors per NEC. AY farm load calculation (RPP-CALC-24468) will be updated at next review cycle.

19. **Justification of the Change** (Use ECN Continuation pages as needed)

Engineering Rework ☐ Yes ☒ No

Training Impact ☐ Yes ☒ No

This change is necessitated from the NEC requirement that conductors be adequately protected from overcurrent, such as an overload condition. NEC has requirement to transformer overcurrent protection (fuses) at primary side. Also, RPP-RPT-38265, Tank Farm Electrical Distribution Studies and previous tank farm electrical distribution system studies have concluded that the electrical deficiency exists and needs to be upgraded.

This change will resolve recommendation 8.1.4 and 8.1.5 of RPP-CALC-24468.

This change will also resolve WRPS-PER-2008-0326.

20. **ECN Category**

☐ Direct Revision
☒ Supplemental
☐ Void/Cancel

ECN Type

☐ Supersedure
☐ Revision

21. **Distribution**

Name	MSIN	Name	MSIN
MA Roberts	S5-07		
RE Nelson	S5-07		
EA Hamm	R2-58		
CP Woehle	S5-03		

Release Stamp

JAN 22 2009
DATE:
HANFORD RELEASE
STA: 4
ID: 8

22. **Revisions Planned** (Include a brief description of the contents of each revision)
N/A

Note: All revisions shall have the approvals of the affected organizations as identified in block 12 "Approval Designator," on page 1 of this ECN.

23. **Commercial Grade Item Dedication Numbers** (associated with this design change)
N/A

24. **Engineering Data Transmittal Numbers** (associated with this design change, e.g., new drawings, new documents)
N/A

25. **Other Non Engineering (not in HDCS) documents that need to be modified due to this change**

Type of Document	Document Number	Update Completed On	Responsible Engineer (print/sign and date)
Alarm Response Procedure	N/A		
Operations Procedure	N/A		
Maintenance Procedure	N/A		

26. **Field Change Notice(s) Used?**
☐ Yes ☒ No
If Yes, Record Information on the ECN-2 Form, attach form(s), include a description of the interim resolution on ECN Page 1, block 18, and identify permanent changes.

NOTE: ECNs are required to record and approve all FCNs issued. If the FCNs have not changed the original design media then they are just incorporated into the design media via an ECN. If the FCN did change the original design media then the ECN will include the necessary engineering changes to the original design media.

27. **Design Verification Required?**
☐ Yes ☒ No
If Yes, as a minimum attach the one page checklist from TFC-ENG-DESIGN-P-17.

28. **Approvals**

Facility/Project Signatures		Date	A/E Signatures		Date
Resp. Engineer	KL Ewer Kenneth L. Ewer	12/18/08	Originator/Design Agent		
Resp. Manager	MA Roberts Mark Roberts	01/22/09	Professional Engineer		
Quality Assurance			Project Engineer		
IS&H Engineer			Quality Assurance		
NS&L Engineer			Safety		
Environ. Engineer			Designer		
Engineering Checker	RE Nelson	12/19/08	Environ. Engineer		
Other			Other		
Other			Other		
Other			DEPARTMENT OF ENERGY / OFFICE OF RIVER PROTECTION		
Other			Signature or a Control Number that tracks the Approval Signature		
Other					
Other			ADDITIONAL SIGNATURES		
Other					
Other					

ENGINEERING CHANGE NOTICE CONTINUATION SHEET Page 3 of 6	☐ DM ☒ FM ☐ TM	1a. ECN 726034 R0 1b. Proj. ECN N/A

Document/Drawing No. H-14-030006, Sheet 1 Revision 14

WAS:

MOTOR CONTROL CENTER AY801A-EDS-MCC-001

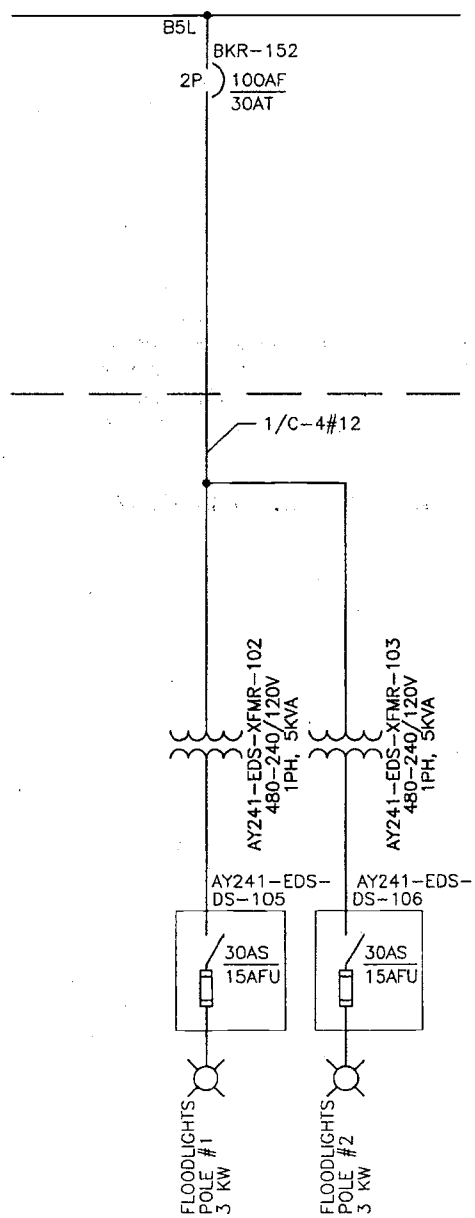

ENGINEERING CHANGE NOTICE CONTINUATION SHEET Page 4 of 6	☐ DM ☒ FM ☐ TM	1a. ECN 726034 43 RO 1b. Proj. ECN N/A

Document/Drawing No. H-14-030006, Sheet 1 Revision 14

IS:

MOTOR CONTROL CENTER AY801A-EDS-MCC-001

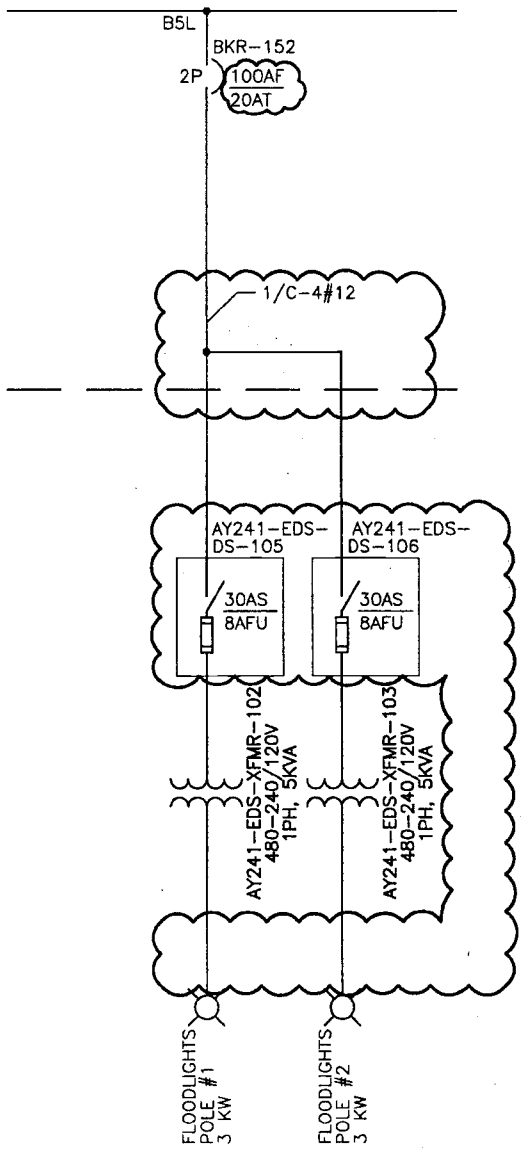

☐ DM ☒ FM ☐ TM	1a. ECN 726043 R0 1b. Proj. ECN N/A

Document/Drawing No. H-2-91044, Sheet 7 Revision 1

WAS:

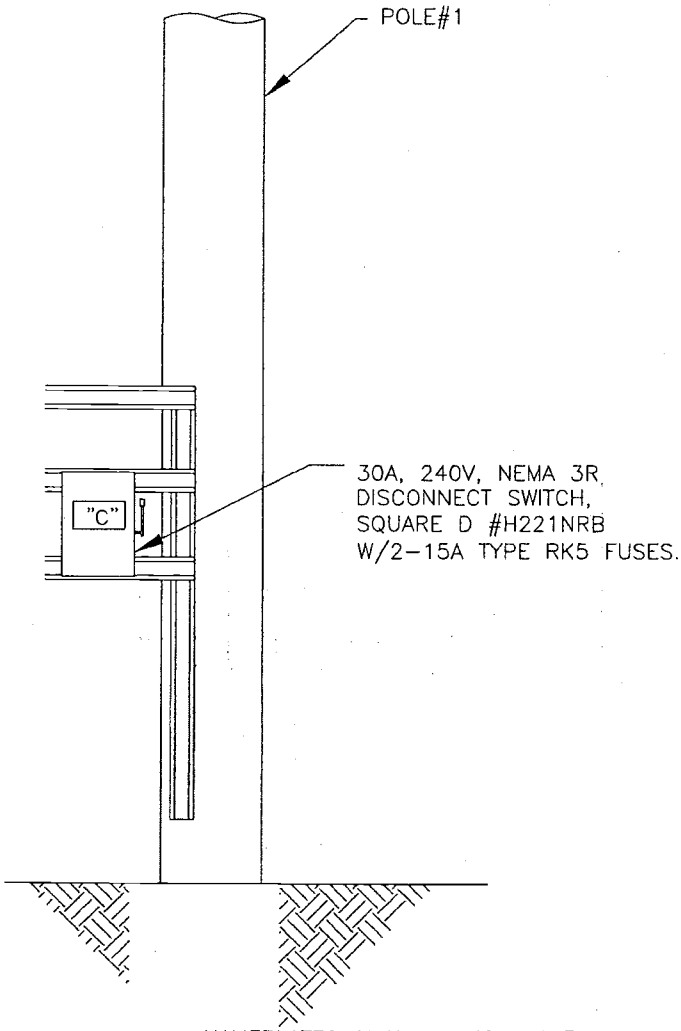

NAMEPLATES SHALL CONTAIN INFORMATION SHOWN AND BE ATTACHED IN APPROPRIATE LOCATION SHOWN USING CLEAR SILICON ADHESIVE, ANY GRADE. NAMEPLATE MATERIAL TO BE 0.62" THICH LAMITEX LAMINATED RIGID ENGRAVING STOCK WITH WHITE SURFACE AND BLACK CORE. FIELD TO DETERMINE WIDTH AND HEIGHT. CHARACTER HEIGHT SHALL BE 3/16" MIN.

NAMEPLATE "C" SERVICE DISCONNECT
AY241-EDS-DS-105
240V, 1PH, POWER TO FLOODLIGHTS POLE #1
FED FROM AY241-EDS-XFMR-102

ELEVATION (L)
H-2-91041, SH 2 & 15

AC FEED FOR RECTIFIERS
NO 7, NO 8, NO 31 & NO 32

ENGINEERING CHANGE NOTICE CONTINUATION SHEET Page 6 of 6	☐ DM ☒ FM ☐ TM	1a. ECN 726043 R0 1b. Proj. ECN N/A

Document/Drawing No. H-2-91044, Sheet 7 Revision 1

IS:

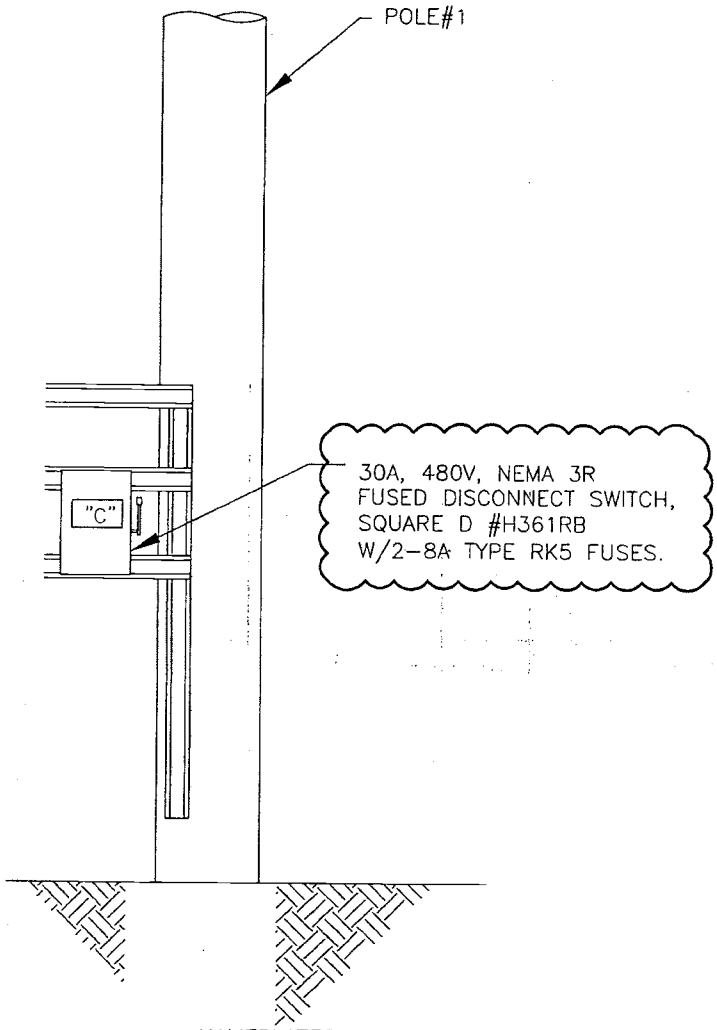

NAMEPLATES SHALL CONTAIN INFORMATION SHOWN AND BE ATTACHED IN APPROPRIATE LOCATION SHOWN USING CLEAR SILICON ADHESIVE, ANY GRADE. NAMEPLATE MATERIAL TO BE 0.62" THICH LAMITEX LAMINATED RIGID ENGRAVING STOCK WITH WHITE SURFACE AND BLACK CORE. FIELD TO DETERMINE WIDTH AND HEIGHT. CHARACTER HEIGHT SHALL BE 3/16" MIN.

NAMEPLATE "C"
BRANCH CIRCUIT DISCONNECT
AY241-EDS-DS-105
480V, 1PH, POWER TO FLOODLIGHTS POLE #1
FED FROM AY801A-EDS-BKR-152

ELEVATION L
H-2-91041, SH 2 & 15

AC FEED FOR RECTIFIERS
NO 7, NO 8, NO 31 & NO 32

Task# WRPS-PER-2008-0167.22

E-STARS[R] Report
Task Detail Report
07/08/2009 1010

TASK INFORMATION			
Task#	WRPS-PER-2008-0167.22		
Subject	WRPS-PER-2008-0167; RES; Perform work package TFC-WO-08-2313 Deliverable: Copy of work record.		
Parent Task#	WRPS-PER-2008-0167	**Status**	Open
Reference	WRPS-PER-2008-0167	**Due**	08/25/2009
Originator	^PER CAs	**Priority**	Medium
Originator Phone		**Category**	PER
Origination Date	12/30/2008 0929	**Generic1**	None
Remote Task#		**Generic2**	None
Deliverable	PER Review	**Generic3**	None
Class	None	**View Permissions**	Global
Instructions	*No Instructions*		

ROUTING LISTS

1	Corrective Action	Active
	Perform work package TFC-WO-08-2313 Deliverable: Copy of work record. Reference: Issue 8.1.4 AY Farm RESPONSIBLE MANAGER: When this corrective action is complete, enter a closure statement in E-STARS and close the E-STARS subtask. Refer to the Problem Evaluation Request procedure TFC-ESHQ-Q-C-C-01, Section 4.4 for closure documentation requirements	
	• Brooks, Rocky L - Assign - Awaiting Response - Due Date - 08/18/2009 0000 *Instructions:*	
	• Knight, Mark A - Review - Awaiting Response - Due Date - 08/22/2009 0000 *Instructions:*	

ATTACHMENTS

Attachments	1. DNFSB Electrical Letter Attachment.pdf 2. DNFSB Electrical Letter.pdf 3. Link to PER 4. RE_ WRPS-PER-2008-0167 _RES_.msg 5. Request to Extend WRPS-PER-2008-0167_2__4__7__22__31 _RES_.msg 6. WRPS-PER-2008-0167 EVENT & CAUSAL FACTORING CHART.pdf

COMMENTS

Poster	^PER Coordinator (Owen, Annette) - 05/28/2009 1558
	Due Date Extension
	Extend WRPS-PER-2008-0167.22 - Please assign a new due date of August 18, 2009. Material (breakers) has been procured but not yet received. Additional time is required for material delivery and to perform fieldwork. D Bragg

TASK DUE DATE HISTORY

Modified	05/28/2009 1558 - ^PER Coordinator	**New Due Date**	08/18/2009 0000
Modified	12/30/2008 0929 - ^PER CAs	**New Due Date**	06/16/2009 0000

Task# WRPS-PER-2008-0167.22			
Modified	12/30/2008 0929 - ^PER CAs	**New Due Date**	10/03/2009 0000
SUB TASK HISTORY			
No Subtasks			

-- end of report --

Message

From: Bragg, David A

Sent: Thursday, May 28, 2009 3:52 PM

To: ^WRPS Corrective Action Group

Cc: Knight, Mark A; Brooks, Rocky L; Owen, Annette

Subject: Request to Extend WRPS-PER-2008-0167.2/.4/.7/.22/.31 (RES)

Per direction of Mark Knight, please extend the following corrective actions:

WRPS-PER-2008-0167.2 - Please assign a new due date of July 8, 2009. Work has been completed, however additional time is required to finish review and to complete/process paperwork

WRPS-PER-2008-0167.4 - Please assign a new due date of July 8, 2009. Work has been completed, however additional time is required to finish review and to complete/process paperwork

WRPS-PER-2008-0167.7 - Please assign a new due date of July 8, 2009. Work has been completed, however additional time is required to finish review and to complete/process paperwork

WRPS-PER-2008-0167.22 - Please assign a new due date of August 18, 2009. Material (breakers) has been procured but not yet received. Additional time is required for material delivery and to perform fieldwork.

WRPS-PER-2008-0167.31 - Please assign a new due date of August 5, 2009. Work is dependant upon SY Farm outage schedule.

Thank you,

David Bragg
Base Operations Maintenance Engineering

Task# WRPS-PER-2008-0167.23

E-STARS[R] Report
Task Detail Report
07/08/2009 1011

TASK INFORMATION			
Task#	WRPS-PER-2008-0167.23		
Subject	WRPS-PER-2008-0167; RES; Evaluate adequacy of insulation associated with Issue 8.5.4.4 for AY Farm wiring, and provide results to the Electrical Disc		
Parent Task#	WRPS-PER-2008-0167	**Status**	CLOSED 01/21/2009
Reference	WRPS-PER-2008-0167	**Due**	02/17/2009
Originator	^PER CAs	**Priority**	Medium
Originator Phone		**Category**	PER
Origination Date	12/30/2008 0929	**Generic1**	None
Remote Task#		**Generic2**	None
Deliverable	PER Review	**Generic3**	None
Class	None	**View Permissions**	Global
Instructions	*No Instructions*		

ROUTING LISTS

1	Corrective Action	Inactive
	Evaluate adequacy of insulation associated with Issue 8.5.4.4 for AY Farm wiring, and provide results to the Electrical Discipline Lead for incorporation into RPP-RPT-38265, Rev 1. Deliverable: Electronic copy of evaluation or documentation sent to Electrical Discipline Lead. RESPONSIBLE MANAGER: When this corrective action is complete, enter a closure statement in E-STARS and close the E-STARS subtask. Refer to the Problem Evaluation Request procedure TFC-ESHQ-Q-C-C-01, Section 4.4 for closure documentation requirements	
	• Nelson, Rick E - Assign - Completed with comments - 01/20/2009 0957 *Instructions:*	
	• Knight, Mark A - Review - Concur with comments - 01/20/2009 1022 *Instructions:*	

ATTACHMENTS

Attachments	1. DNFSB Electrical Letter Attachment.pdf 2. DNFSB Electrical Letter.pdf 3. Link to PER 4. RE_ WRPS-PER-2008-0167 _RES_.msg 5. WRPS-PER-2008-0167 EVENT & CAUSAL FACTORING CHART.pdf 6. WRPS-PER-2008-0167.23 CLOSURE RPP-RPT-38265-R1.pdf

COMMENTS

Poster	Nelson, Rick E (Bragg, David A) - 01/20/2009 0957
	Completed
	RPP-RPT-38265-R1 was released ON 01/16/09. See attachment for objective evidence. The PER originator has declined involvement in the disposition.
Poster	Knight, Mark A (Bragg, David A) - 01/20/2009 1022
	Concur
	RPP-RPT-38265-R1 was released on 01/16/09. See attachment for objective evidence. The PER originator has declined involvement in the disposition.
Poster	^PER CAs (Owen, Annette) - 01/21/2009 1106

Task# WRPS-PER-2008-0167.23			
	CLOSED		
	Closure statement and attached documentation are adequate to close this action.		
TASK DUE DATE HISTORY			
Modified	12/30/2008 0929 - ^PER CAs	**New Due Date**	02/17/2009 0000
Modified	12/30/2008 0929 - ^PER CAs	**New Due Date**	10/03/2009 0000
SUB TASK HISTORY			
No Subtasks			

-- end of report --

CH2M HILL DOCUMENT RELEASE FORM

(1) Document Number: RPP-RPT-38265	(2) Revision Number: 1	(3) Effective Date: 01/16/2009	
(4) Document Type: ☐ Digital Image ☒ Hard copy ☐ PDF ☐ Video	(a) Number of pages (including the DRF) or number of digital images 63		
(5) Release Type ☐ New ☐ Cancel	☐ Page Change	☒ Complete Revision	
(6) Document Title: Tank Farm Electrical Distribution Studies Issue Status			
(7) Change/Release Description: Updated to reflect the current status of resolution of the load studiy issues			
(8) Change Justification: NA			

(9) Associated Structure, System, and Component (SSC) and Building Number:		
	(a) Structure Location: Double Shell Tank Farms	(c) Building Number: 241-AP, AW, AY, AZ, SY, C
	(b) System Designator: NA	(d) Equipment ID Number (EIN): NA

(10) Impacted Documents:	(a) Document Type	(b) Document Number	(c) Document Revision
	NA		

(11) Approvals:

(a) Author (Print/Sign): E.R. Hamm ER Hamm	Date: 1/16/2009
(b) Responsible Manager (Print/Sign): M.A. Roberts Mark Roberts	Date: 01/16/2009
(c) Reviewer (Optional, Print/Sign): R.E. Nelson By Telephone ER Hamm	Date: 1/16/2009.
(d) Reviewer (Optional, Print/Sign):	Date:

(12) Distribution:

(a) Name	(b) MSIN	(a) Name	(b) MSIN
M.J. Bryden	S5-07	G.J. Coleman	S7-24
E.R. Hamm	R2-58	E.A. Nelson	R2-58
R.E. Nelson	S5-07	M.A. Knight	S5-07
M.A. Roberts	S5-07		

Release Stamp

DATE: HANFORD RELEASE ID:
STA: 4
JAN 16 2009 (2)

(13) Clearance	(a) Cleared for Public Release	(b) Restricted Information?	(c) Restriction Type:
	☒ Yes ☐ No	☐ Yes ☒ No	

(14) Clearance Review (Print/Sign): L Fox LE Fox Date: 1-16-2009

A-6003-881 (05/05)

TANK FARM ELECTRICAL DISTRIBUTION STUDIES Issues Status

ER Hamm / RE Nelson
Washington River Protection Solutions, LLC.
Richland, WA 99352
U.S. Department of Energy Contract DE-AC27-08RV14800

EDT/ECN: UC:
Cost Center: Charge Code:
B&R Code: Total Pages: 63

Key Words: National Electric Code (NEC), Demand Load, Load Flow, Voltage drop, Short Circuit, Protective Device Coordination, Equipment Evaluation, Arc Flash Evaluation, Engineering Evaluation, SKM, PTW

Abstract: This report is the basline eletrical power distribution system studies issues for 241-SY, 241-AW, 241-AP, 241-AY, AZ-701/702, C-109, 241-AZ, and 241-AN.

TRADEMARK DISCLAIMER. Reference herein to any specific commercial product, process, or service by trade name, trademark, manufacturer, or otherwise, does not necessarily constitute or imply its endorsement, recommendation, or favoring by the United States Government or any agency thereof or its contractors or subcontractors.

Release Approval	Date

DATE:
STA: 4
HANFORD RELEASE
ID:
JAN 16 2009
2

Release Stamp

Approved For Public Release

Tank Farm Contractor (TFC) **RECORD OF REVISION**	(1) Document Number: **RPP-RPT-38265**	Page 1

(2) Title:

Tank Farms Electrical Distribution Studies Issues Status

Change Control Record

(3) Revision	(4) Description of Change – Replace, Add, and Delete Pages	Authorized for Release	
		(5) Resp. Engr. (print/sign/date)	(6) Resp. Mgr. (print/sign/date)
1 **RS**	Updated to reflect the current status of resolution of the load study status	ER Hamm ER Hamm 1/16/2009	MA Roberts See DRF ER Hamm 1/16/2009

TABLE OF CONTENTS

1.0 PURPOSE 1

2.0 SCOPE 1

3.0 SUMMARY OF ELECTRICAL LOAD STUDIES ISSUE STATUS 1

4.0 SOFTWARE VERIFICATION AND VALIDATION (V&V) 2

5.0 AN TANK FARM 3

6.0 AP TANK FARM 14

7.0 AW TANK FARM 21

8.0 AY TANK FARM 30

9.0 AZ 701/702 FACILITIES 37

10.0 AZ TANK FARM 39

11.0 C-109 RETRIEVAL PROJECT 41

12.0 SY TANK FARM 43

LIST OF TABLES

Table 1. Summary Status of Distribution Studies Issues 1

Table 2. Software Verification and Validation 2

LIST OF TERMS

FFS	Fluor Federal Services
HP	Horse Power
FLA	Full Load Amperes
NEC	National Electrical Code
PPE	Personal Protective Equipment
PTW	Power*Tools for Windows

1.0 PURPOSE

The purpose of this report is to provide a list of the Tank Farm Electrical Load Studies and track the status and the basis for closure of each issue. The document will be revised as new load studies are performed and issues are closed out.

This document was initiated following a DNFSB review of the Double Shell Tank Farm Electrical System in June 2008.

2.0 SCOPE

Double Shell Tank Farm electrical load study calculations as noted in Table 1. The status and basis for closure for issues identified in electrical load studies for other Tank Farm facilities will be included the next revision of this document.

3.0 SUMMARY OF ELECTRICAL LOAD STUDIES ISSUE STATUS

Table 1. Summary Status of Distribution Studies Issues

	Facility	Calculation Number	Number of Issues	Number Resolved	Number Requiring Field Work	Number Requiring Document Change ECNs
1	AN	RPP-CALC-24467 R.0	12	8	4	0
2	AP	RPP-8182 R. 0	8	2	4	2
3	AW	RPP-8183 R.1	11	7	3	1
4	AY	RPP-CALC-24468 R.0	11	7	4	0
5	701/702	RPP-CALC-24466 R.0	0	0	0	0
6	AZ	RPP-CALC-24465 R.0	0	0	0	0
7	C-109	RPP-CALC-32223 R.0	0	0	0	0
8	SY	RPP-8185 R.0	33	23	10	0
	Totals		75	47	25	3

4.0 SOFTWARE VERIFICATION AND VALIDATION (V&V)

The Software verification and Validation (V&V) table provides the SKM Power Tools for Windows* Software Version and the referenced V&V documentation for each electrical load study.

Table 2. Software Verification and Validation

	Contractor	Calculation Number	Software Used	Software Version Number	V&V Document Number	Comments
1	Fluor Federal Services	RPP-8182 R. 0	SKM Power*Tools	3.8.1.0 Build 2 Version 4.0.0.0 Beta 6	RPP-9886 Rev. 0	RPP-9886 covers PTW Software versions 3.8.1.0 through 4.0.2.3 (build 1)
2	Fluor Federal Services	RPP-8183 R.1	SKM Power*Tools	5.0.2.8 Build 2	HNF-26563 Rev. 0	
3	Fluor Federal Services	RPP-8185 R.0	SKM Power*Tools	3.8.1.0 Build 2 4.0.2.6 Build 1	RPP-9886 Rev. 0	RPP-9886 covers PTW Software versions 3.8.1.0 through 4.0.2.3 (build 1)
4	Fluor Federal Services	RPP-CALC-24465 R.0	SKM Power*Tools	5.0.2.8 Build 2	HNF-19648, Rev.0 RPP-9886, Rev.0 HNF-26563 Rev. 0	RPP-9886 covers PTW Software versions 3.8.1.0 through 4.0.2.3 (build 1)
5	Fluor Federal Services	RPP-CALC-24466 R.0	SKM Power*Tools	5.03.0 Build 1	HNF-19648, Rev.0 RPP-9886, Rev.0 HNF-26563 Rev. 0	RPP-9886 covers PTW Software versions 3.8.1.0 through 4.0.2.3 (build 1)
6	Fluor Federal Services	RPP-CALC-24467 R.0	SKM Power*Tools	5.0.2.8 Build 2	HNF-19648, Rev.0 RPP-9886, Rev.0 HNF-26563 Rev. 0	RPP-9886 covers PTW Software versions 3.8.1.0 through 4.0.2.3 (build 1)
7	Fluor Federal Services	RPP-CALC-24468 R.0	SKM Power*Tools	5.0.2.8 Build 2	HNF-19648, Rev.0 RPP-9886, Rev.0 HNF-26563 Rev. 0	RPP-9886 covers PTW Software versions 3.8.1.0 through 4.0.2.3 (build 1)
8	ARES Corporation	RPP-CALC-32223 R.0	SKM Power*Tools	Version 6.0.2.8	VV-07-07-004	

5.0 AN TANK FARM

Document Number	Release Date	SKM/PTW Version	NEC Code	Contractor
RPP-CALC-24467 Rev 0	06/21/2005	5.0.2.8 Build 2	2002	FFS

	Electrical Study Section	Total Issues	Open Issues Requiring Field Work	Open Issues Requiring a Document Change ECN	Issues Resolved
1	NEC Issues	3	0	0	3
2	Demand Load Study	0	0	0	0
3	Load Flow and Voltage drop Study	1	1	0	0
4	Short Circuit Study	2	2	0	0
5	Protective Device Coordination	4	1	0	3
6	Equipment Evaluation Report	2	0	0	2
7	Arc Flash Evaluation Study	0	0	0	0
	Total	12	4	0	8

AN TANK FARMS

Issue #	National Electric Code (NEC) Issues	Recommendations	Status	Comment
8.1.1	Supernatant pump AN06A-WT-P-016 has a 25 HP motor. The NEC FLA for a 25 HP motor is 34A. The motor branch circuit conductors are shown as #8 AWG. The NEC rated ampacity for #8 conductors is 40A @ 60 deg. C (Table 310.16). NEC article 430.22 requires that the motor conductors be rated at 125% of the motor FLA (34 x 1.25 = 42.5A). The 60 deg. C ampacity of the #8 conductors is inadequate for the 40HP motor.	1) Verify conductor termination and equipment is rated for 75 deg. C (50A ampacity of # 8 conductors); or 2) Replace the #8 motor circuit conductors with #6 AWG conductors (55A).	Resolved	The cabinet is compliant with UL-508A, "Industrial Control Panel" Section 29.6(a), internal wiring sizing. This section use 100% FLA for sizing the wires. The Field wiring from the MCC terminal strip to the load is #6 AWG which is good for 55Amp. The field installation is NEC compliant. No further action required ECN-723859, Rev.0 changed Drawing H-14-030001, sh.2 to show #6AWG connected to AN06A-WT-P-016 Reference: H-14-030001, sh.2, R.13
8.1.2	Annulus exhaust fan AN241-VTA-EF-003 is shown as 10 HP. The NEC FLA for a 10 HP motor is 14A. NEC article table 430.52 requires that the maximum trip rating of a breaker supplying a single motor be 250% of the FLA (14 x 2.5 = 35A), unless that breaker does not permit the motor to start. Therefore, unless there is a historical starting problem, breaker BKR-118 (50A) is in violation of the NEC.	Replace BKR-118 with a breaker rated at 35A, maximum.	Resolved	The field configuration indicated the breaker is 30A breaker. Drawing H-14-030001, sh.3, R.6 have been changed by ECN-723859, R.0 to reflect field configuration Reference: H-14-030001, Sh.3, Rev.6 PER 2005-2613 and ECN: 723859 Rev.0
8.1.3	Building AN273 coolant pump control panel AN273-GLY-CP-101 is supplied from fused disconnect switch AN273-GLY-DS-101. One line diagram H-14-030001 Sh. 2 Rev 10 and elementary diagram H-14-030301 Sh. 1 Rev 1 indicate 30A fuses in the switch. Plan drawing H-2-93194 Sh. 1 Rev 1 indicates #12 conductors on the load side of disconnect switch. The 30A fuses do not provide adequate over current protection (20A) for the #12 conductors in accordance with NEC 240.4.D. And the 30A fuses exceed the over current protection allowed by NEC 430.62.	Verify conductor size. If conductors are #12, replace fuses with 20A units.	Resolved	The field configuration indicated that 15A fuses are installed, the 15A fuses provide adequate over current protection for #12 conductors Reference: H-14-030001. sh.2, Rev.13 PER 2005-2613 ECN: 723859 Rev.0.

AN TANK FARMS

Issue #	Demand Load Issues	Recommendations	Status	Comment
NA	NA	NA	NA	NA

Issue #	Load Flow & Voltage Drop Issues	Recommendations	Status	Comment
8.3.4	The voltage drop calculation indicates the following bus voltage drops exceed the ANSI C84.1 limits (8.3% voltage drop) with 480V maintained at the utility transformer secondary bus: Bus Voltage Drops > 8.3% (480V Assumed at Utility Transformer Secondary Bus) Component Name: High Phase Voltage Drop (%): Comment BUS-DP-105: 9.48: Verify loads on DP-105 XFMR-102-SEC: 9.41: Verify loads on DP-105	NA	Field Work Required	Power to the SHIMS cabinets has been removed (Breakers Opened) , thereby reducing the calculated voltage drop from 9.48% to 4.79%. ECN -725722 R.0 has been prepared to lift leads and de-energize DP-105 References: H-14-030001, Sh.1, Rev. 13 H-14-030001, Sh.11, Rev.9 ECN-725722, Rev.0

Issue #	Short Circuit Study Issues	Recommendations	Status	Comment
8.4.4	Disconnect switch AN273-EDS-DS-112 is non-fused. The nominal short circuit rating for a non-fused disconnect switch is 10kA. The calculated short circuit current at the switch location is approximately 15.6 kA.	Fused disconnect switches assume the short circuit ratings of the installed fuse. Replace DS-112 with a 100A fused disconnect switch with 90A fuses suitable for the available short circuit current.	Field Work Required	Change the switch from a non-fused to a fused switch. Work Package TFC-WO-08-0276 ECN ECN-725990-R0 - -Released Work package is Ready To Work Reference: H-14-030001, Sh.2, Rev.13

AN TANK FARMS

<table>
<tr><th>Issue #</th><th>Short Circuit Study Issues</th><th>Recommendations</th><th>Status</th><th>Comment</th></tr>
<tr>
<td>8.4.5</td>
<td>Disconnect switch AN241-EDS-DS-120 is non-fused. The nominal short circuit rating for a non-fused disconnect switch is 10kA. The calculated short circuit current at the switch location is approximately 15.8 kA.
<table>
<tr><th colspan="2">Switch</th><th colspan="2">Fuse</th><th rowspan="2">Calculated Short Circuit Current (kA)</th><th rowspan="2">Comment</th></tr>
<tr><th>PTW Name</th><th>PTW Name</th><th>Rating (kA)</th></tr>
<tr><td>DS-100</td><td>FU-DS-100</td><td>10</td><td>18.5</td><td>Assumed Fuse Type (Bussmann RES). Verify.</td></tr>
<tr><td>DS-113</td><td>FU-DS-113</td><td>10</td><td>15.6</td><td>Assumed Fuse Type (Bussmann RES). Verify.</td></tr>
<tr><td>DS-127</td><td>FU-DS-127</td><td>200</td><td>17.9</td><td>Assumed Fuse Type (Bussmann FRS). Verify.</td></tr>
<tr><td>VT-DS-101</td><td>FU-VT-DS-101</td><td>10</td><td>15.6</td><td>Assumed Fuse Type (Bussmann RES). Verify.</td></tr>
</table>
</td>
<td>Fused disconnect switches assume the short circuit ratings of the installed fuse. Replace DS-120 with a 100A fused disconnect switch with 100A fuses suitable for the available short circuit current.

Numerous other disconnect switches are noted in the PTW Equipment Evaluation report to be applied beyond their short circuit rating. This evaluation is based upon the non-fused rating (10kA) of the switch. However, the short circuit rating of a fused-disconnect switch is that of the fuse, and in some cases, a non-fused disconnect switch may be protected by an upstream fuse. For each of the fused disconnect switches applied at a location with short circuit current greater than 10kA, fuse ratings must evaluated to determine adequacy of the fused switch. All fused switches in this study are adequately protected by their fuses with exception of those in the following table. Lacking specific information for these fuses, assumed fuse types were utilized. Actual installed fuse types should be determined and evaluated for suitability considering the available short circuit current.</td>
<td>Field Work Required</td>
<td>Change the switch from a non-fused to a fused switch.
Work package TFC-WO-08-0277
ECN-725995-R0-- Released
Work package is Ready To Work
Reference:
H-14-030001, Sh.2, Rev.13
H-14-030001, Sh.1, Rev.24</td>
</tr>
</table>

AN TANK FARMS

Issue #	Protective Device Coordination Issues	Recommendations	Status	Comment
8.5.3.1	General – Circuit breakers with instantaneous trip characteristics with no intentional delay may not achieve selective coordination with other nearby instantaneous trip devices. This situation is commonly found at a panel or motor control center with thermal-magnetic main and feeder circuit breakers. Short circuits on the feeders with sufficient available fault current may trip the main breaker. This situation is found in the system of this study at MCC-001, MCC-002, DP-103, for example.	NA	NA	NA
8.5.3.2	MCC-001 feeder fuse FU-DS-127 (400A) does not coordinate with existing settings of MCC-001 main breaker BKR-101 for feeder overcurrents above approximately 2kA (Ref. TCC MCC-001 in Appendix E). Overcurrents greater than 2kA on the feeder supplying DP-130 and the exhauster skids will trip the MCC-001 main breaker. Short circuit current at DP-130 exceeds 9kA.	1) Raise the short time pickup setting of BKR-101 to its maximum setting of 8x (8000A). This will provide improved coordination up to approx 7kA. A STPU setting of 5x (5000A) or greater on BKR-101 will miscoordinate with the existing STPU setting (4800A) of upstream breaker BKR-100, so BKR-100 STPU would have to be raised to at least 8x (9600A)(Ref. TCC DP-130-MAIN(1) in Appendix E); or 2) Replace the 400A fuse with a circuit breaker with characteristics more closely matching the upstream breakers (Ref. TCC DP-130-MAIN (2) in Appendix E).	Field Work Required F5.1	Update the trip settings for BKR 100 and 101. Reference: H-14-030001, Sh.1, Rev.24 PM# WDL-110-523 Work Package is Ready To Work?
8.5.3.3	Panel DP-130 main breaker does not selectively coordinate with upstream fuse FU-DS-127 nor the MCC-001 main breaker BKR-101 for overcurrents greater than approximately 2kA (Ref. TCC DP-130-MAIN in Appendix E). See also 0 above.	Raise the short time pickup setting of BKR-101 to at least 3x (3000A) to provide coordination with the DP-130 main breaker.	Resolved	Same breaker as 8.5.3.2. BKR 101 will be set to 8000 amps which is well above the recommended 3000 amp. See 8.5.3.2 above

AN TANK FARMS

<table>
<tr><th>Issue #</th><th>Protective Device Coordination Issues</th><th>Recommendations</th><th>Status</th><th>Comment</th></tr>
<tr><td>8.5.3.4</td><td>Fuse FU-DS-117 in disconnect switch DS-117 does not selectively coordinate with MCC-001 main breaker BKR-101 for overcurrents greater than approximately 2kA (Ref. TCC DS-117 in Appendix E). The short time pickup setting (2000A) of BKR-101 does not allow coordination with the 200A feeder fuse.</td><td>Raise the short time pickup setting of breaker BKR-101 to at least 4kA. See also 0 above.</td><td>Resolved</td><td>Same breaker as 8.5.3.2.
BKR 101 will be set to 8000 amps which is well above the recommended 3000 amp.
See 8.5.3.2 above</td></tr>
<tr><td>8.5.3.5</td><td>Where identical branch circuits are protected by the same device, a TCC was generated for only one.</td><td>NA</td><td>NA</td><td>NA</td></tr>
<tr><td>8.5.3.6</td><td>Although they meet the NEC requirements for overcurrent protection, comparison of the cable thermal damage curve with the time-current characteristics of the upstream protective device indicates the following cables may not be adequately protected from damage throughout the entire range of overcurrent from overloads to short circuits. Cable damage temperature is assumed to be 150 deg. C with an initial operating temperature of 75 deg. C. Field verification of installed cable insulation type may be warranted.
<table>
<tr><th></th><th>Cable Name</th><th>Reference TCC</th><th>Wire Size</th><th>Protective Device (Upstream)</th><th>Comment</th></tr>
<tr><td>1</td><td>CBL-BKR-105LD</td><td>BKR-105</td><td>10</td><td>BKR-105
C-H HFD 30A</td><td></td></tr>
<tr><td>2</td><td>WR82</td><td>BKR-118</td><td>10</td><td>BKR-118
C-H HFD 50A</td><td>Motor Circuit</td></tr>
<tr><td>3</td><td>WR85</td><td>BKR-121</td><td>12</td><td>BKR-121
C-H HFD 15A</td><td></td></tr>
<tr><td>4</td><td>WR87</td><td>BKR-122</td><td>12</td><td>BKR-122
C-H HFD 20A</td><td></td></tr>
<tr><td>5</td><td>WR228</td><td>BKR-123</td><td>12</td><td>BKR-123
C-H HFD 15A</td><td></td></tr>
<tr><td>6</td><td>WR229</td><td>BKR-124</td><td>12</td><td>BKR-124
C-H HFD 15A</td><td></td></tr>
</table></td><td>NA</td><td>Resolved</td><td>A field walkdown and inspection was performed and determined that conductor insulation in all circuits is rated for 90 deg. C and wire sizing was consistent with recommended ampacities per NEC 2008 table 310.16.
There was no indication of excessive heat or discoloration on the wire insulation or terminations.
Annual preventive maintenance is performed on the Motor Control Center (MCC) that provides power for these branch circuits. This preventive maintenance program performs a check of the tightness of all connection along with a visual inspection of each of the individual conductors for signs of deterioration, heat, discoloration of conductors.
Reference:
SKM System Analysis Inc.</td></tr>
</table>

AN TANK FARMS

Issue #	Protective Device Coordination Issues						Recommendations	Status	Comment
	7	WR572	BKR-130	10	BKR-130 C-H HFD 30A				purpose and guidelines for basic over current protection philosophy for insulated power cables IEEE 242-2001 chapter 9 Cable ProtectionH-14-030001, Sh.1, Rev.24 H-14-030001, Sh.2, Rev.13 H-14-030001, Sh.3, Rev.6
	8	CBL-BKR-351	BKR-350	8	BKR-350 Sq-D FA 100A	Tap Conductor, downstream protection.			
	9	CBL-BKR-451	BKR-450	8	BKR-450 Sq-D FA 100A	Tap Conductor, downstream protection.			
	10	WR138	DP-103-13	12	DP-103-13 C-H FD 20A				
	11	WR139	DP-103-14	12	DP-103-14 C-H FD 20A				
	12	CBL-DS-111	DP-104	12	DP-103-37 C-H FD 15A				
	13	WR93	DP-107-11	12	BKR-DP107-11 C-H HFD 20A				
	14	WR94	DP-107-12	12	BKR-DP107-12 C-H HFD 20A				
	15	WR00-76	DP-112	8	BKR-132 C-H HFD 100A	Not NEC compliant if tap > 25 ft length. Verify tap conductor length.			
	16	WR210-E	DP-129-MAIN	6	DP-130-6 Sq-D FC 40A	Tap conductor, downstream protection.			

AN TANK FARMS

<table>
<tr><th>Issue #</th><th>Equipment Evaluation Issues</th><th>Recommendations</th><th>Status</th><th>Comment</th></tr>
<tr><td>8.6.1.2</td><td>Protective equipment evaluation based upon load flow current indicates the following protective equipment is applied beyond its continuous current rating:
<table>
<tr><th colspan="4">Protective Device Evaluation Continuous Current Ratings Exceeded</th></tr>
<tr><th></th><th>Component Name</th><th>Rating Exceeded</th><th>Comment</th></tr>
<tr><td>1</td><td>BKR-106</td><td>365A > 225A rating</td><td>DP-103 Feeder Breaker</td></tr>
<tr><td>2</td><td>C8X713</td><td>1.27A > 1A rating</td><td>Utility Transformer Primary Fuse.</td></tr>
<tr><td>3</td><td>DP-103-MAIN</td><td>365A > 225A rating</td><td>Verify DP-103 loads reported on H-14-030001 Sh. 9 rev 4.</td></tr>
<tr><td>4</td><td>(Breaker) DP-103-1</td><td>21A > 20A rating</td><td>Floodlights, poles 1,2,3,7. Loads per panel schedule drawing H-14-030001 Sh. 9 rev 4. Verify reported loads.</td></tr>
<tr><td>5</td><td>FU-DS-103</td><td>18A > 15A rating</td><td rowspan="7">Pole 1-7 Flood Light Circuits. Loads per panel schedule drawing H-14-030001 Sh. 9 rev 4. Verify reported loads.</td></tr>
<tr><td>6</td><td>FU-DS-104</td><td>18A > 15A rating</td></tr>
<tr><td>7</td><td>FU-DS-105</td><td>18A > 15A rating</td></tr>
<tr><td>8</td><td>FU-DS-106</td><td>18A > 15A rating</td></tr>
<tr><td>9</td><td>FU-DS-107</td><td>18A > 15A rating</td></tr>
<tr><td>10</td><td>FU-DS-108</td><td>18A > 15A rating</td></tr>
<tr><td>11</td><td>FU-DS-118</td><td>18A > 15A rating</td></tr>
<tr><td>12</td><td>(Breaker) DP-103-13</td><td>23A > 20A rating</td><td rowspan="2">Impact Wrench Station #1. Load per panel schedule drawing H-14-030001 Sh. 9 rev 4. Verify reported load.</td></tr>
<tr><td>13</td><td>FU-DS-109</td><td>23A > 15A rating</td></tr>
<tr><td>14</td><td>(Breaker) DP-103-14</td><td>23.6A > 20A rating</td><td rowspan="2">Impact Wrench Station #2. Load per panel schedule drawing H-14-030001 Sh. 9 rev 4. Verify reported load.</td></tr>
<tr><td>15</td><td>FU-DS-110</td><td>23.6A > 15A rating</td></tr>
<tr><td>16</td><td>(Breaker) DP-103-8</td><td>70.4A > 60A rating</td><td>Load per panel schedule drawing H-14-030001 Sh. 9 rev 4. Verify reported load.</td></tr>
</table></td><td>NA</td><td>Resolved</td><td>The active loads for these devices are well below the calculated values shown in the table, and below the Ampere Interrupt Capability rating for the protective devices.

This condition is considered acceptable.</td></tr>
</table>

AN TANK FARMS

<table>
<tr><th>Issue #</th><th>Equipment Evaluation Issues</th><th>Recommendations</th><th>Status</th><th>Comment</th></tr>
<tr><td>8.6.2.1</td><td>Non-Protective equipment evaluation based upon load flow current indicates the following equipment is applied beyond its continuous current rating:
<table>
<tr><th colspan="4">Non Protective Device Equipment Evaluation, Continuous Current Ratings Exceeded</th></tr>
<tr><th></th><th>Device</th><th>Criteria Failure</th><th>Comment</th></tr>
<tr><td>1</td><td>CBL-DP-107</td><td>55.4A > 55A Ampacity</td><td>Verify Panel DP-107 loads.</td></tr>
<tr><td>2</td><td>CBL-SA-CMP-001</td><td>42.5A > 40A Ampacity</td><td>25 HP motor, NEC FLA = 34A, 125% FLA minimum circuit ampacity = 42.5A. #8 @ 60 deg C ampacity of 40A is insufficient for motor.</td></tr>
<tr><td>3</td><td>WR137</td><td>70A > 55A Ampacity</td><td></td></tr>
<tr><td>4</td><td>WR138</td><td>23A > 20A Ampacity</td><td>Impact Wrench Station #1 feeder. See 8.6.1.2.</td></tr>
<tr><td>5</td><td>WR139</td><td>23.6A > 20A Ampacity</td><td>Impact Wrench Station #2 feeder. See 8.6.1.2.</td></tr>
<tr><td>6</td><td>WR8</td><td>363A > 230A Ampacity</td><td>DP-103 feeder. See 8.6.1.2.</td></tr>
<tr><td>7</td><td>XFMR-102</td><td>84A > 78A rating</td><td>37.5kVA FLA = 78.1A. DP-105 feeder circuit. Verify DP-105 loads.</td></tr>
<tr><td>8</td><td>XFMR-105</td><td>23.5A > 20.8A rating</td><td>10kVA FLA = 20.8A. DP-107 feeder circuit. Verify DP-107 loads.</td></tr>
<tr><td>9</td><td>XFMR-351</td><td>23A > 20.8A rating</td><td>10kVA FLA = 20.8A. VT-DP-351 feeder circuit. Verify VTP-DP-351 loads.</td></tr>
<tr><td>10</td><td>XFMR-451</td><td>23A > 20.8A rating</td><td>10kVA FLA = 20.8A. VT-DP-341 feeder circuit. Verify VTP-DP-341 loads.</td></tr>
<tr><td>11</td><td>XFMR-C6032L</td><td>1.27A > 0.7A rating</td><td>10kVA Utility Transformer</td></tr>
<tr><td>12</td><td>DP-103 Ckt. 1</td><td>21A > 20A rating</td><td rowspan="4">Loads per panel schedule drawing H-14-030001 Sh. 9 rev 4. Verify reported load.</td></tr>
<tr><td>13</td><td>DP-103 Ckt. 7</td><td>66.7A > 60A rating</td></tr>
<tr><td>14</td><td>DP-103 Ckt. 8</td><td>66.7A > 60A rating</td></tr>
<tr><td>15</td><td>DP-103 Ckt. 13</td><td>23A > 20A rating</td></tr>
</table></td><td>NA</td><td>Resolved</td><td>The calculated load values do not consider demand or diversity factors and the measured loads for this distribution system is significantly lower that the calculated values.</td></tr>
</table>

AN TANK FARMS

Issue #	Equipment Evaluation Issues				Recommendations	Status	Comment
	16	DP-103 Ckt. 14	23.6A > 20A rating				
	17	DP-103 Ckt. 26	66.7A > 60A rating				
	18	DP-111 Ckt. 2	33A > 20A rating	Load per panel schedule drawing H-14-030001 Sh. 21 rev 0. Verify reported load.			
	19	DP-112 Ckt. 2	33A > 20A rating	Load per panel schedule drawing H-14-030001 Sh. 22 rev 0. Verify reported load.			

Issue #	Arc Flash Evaluation Study	Recommendations	Status	Comment
8.7.5	The Arc Flash Evaluation indicates all evaluated fault locations in the distribution system produce arc flash incident energy values below 1.2 cal/cm^2 (PPE Class 0) except for the following:	NA	NA	No Actions Necessary

Arc Flash Incident Energy > 1.2 cal/cm^2			
Bus Fault Location	Incident Energy (cal/cm^2)	PPE Class	Comment
BUS-ENCL-100	44.7	Dangerous!!!	Secondary fault cleared by primary fuse.
BUS-GLY-PS-101	19	Class 3	
BUS-WT-P-010	3.28	Class 1	
EDS-MCC-001	3.25	Class 1	
BUS-WT-P-013	2.19	Class 1	
HH-29	1.96	Class 1	
LINE C8-L6	1.84	Class 1	
BUS-DS-127	1.83	Class 1	
BUS-WT-P-005	1.71	Class 1	

AN TANK FARMS

Issue #	Arc Flash Evaluation Study				Recommendations	Status	Comment
	BUS-WT-P-014	1.71	Class 1				
	BUS-WT-P-001	1.56	Class 1				
	BUS-P-101-1A	1.48	Class 1				
	BUS-DS-124	1.44	Class 1				
	BUS-P-101-1	1.36	Class 1				
	BUS-WT-P-020	1.24	Class 1				
	Line Side Fault Location						
	EDS-MCC-001 (BKR-101)	11.9	Class 3				
	BUS-DP-130 (DP-130-MAIN)	3.3	Class 1				

6.0 AP TANK FARM

Document Number	Release Date	SKM/PTW Version	NEC Code	Contractor
RPP-8182 Rev 0	08/20/2001	3.8.1.0 Build 2 Version 4.0.0.0 Beta 6	1999	FFS

	Electrical Study Section	Total Issues	Open Issues Requiring Field Work	Open Issues Requiring Document Change ECN	Issues Resolved
1	NEC Issues	7	3	2	2
2	Demand Load Study	0	0	0	0
3	Load Flow and Voltage drop Study	0	0	0	0
4	Short Circuit Study	0	0	0	0
5	Protective Device Coordination	1	1	0	0
6	Equipment Evaluation Report	0	0	0	0
7	Arc Flash Evaluation Study	0	0	0	0
	Total	8	4	2	2

AP TANK FARM

Issue #	National Electric Code (NEC) Issues	Recommendations	Status	Comment
8.1.1	Panel EDS-DP-101 has no main breaker, and is supplied by conductors from the secondary of transformer XFMR-101, without intervening overcurrent protection. There is no overcurrent protection for the secondary conductors as required by NEC Article 240-21(c). Note, the transformer primary overcurrent device provides transformer protection in accordance with NEC Article 450-3(6), however, required secondary conductor overcurrent protection does not exist.	Install secondary conductor overcurrent protection (fuses or circuit breaker, 110A maximum) between transformer and panelboard.	Resolved	Breaker has been installed per ECN 724298 Rev.0 Reference: H-14-030003 Sh 2 ECN724298
8.1.2	Primary supply circuit for XFMR-104, fed from MCC-002 circuit breaker BKR-136 is #12 copper conductor, MTW/THW. The ampacity of #12 conductor, is 25A (@ 60 & 75 degrees C) per NEC Table 310-16, but additionally are limited to a maximum 20A overcurrent device per NEC 240-3, The 30A circuit breaker BKR-136 does not provide adequate overcurrent protection for the #12 conductors.	Change existing 30A circuit breaker BKR-I36 to be a 20A circuit breaker.	Field Work Required	ECN-726001-R0 is in development. PER-2008-167AP241-EDS-DP-110 has a total load of 8640W per H-14-030003, SH.16. The 8640w load equates to a 18A on the primary conductor. The #12 wire is rated for 20A. There is no immediate hazard but the circuit is not NEC compliant. Replace # 12 wire with #10 Reference: NEC-240-4(d) H-14-030003 Sh. 17, R-2 H-14-030003 Sh. 18, R-2 H-14-030003 Sh. 3, R-11
8.1.3	The feeder circuit breaker BKR-113 in motor control center MCC-001 does not provide adequate overcurrent protection for a portion of the feeders supplying rectifier disconnect switches CATH-DS-100 and CATH-DS-101. Feeders originating from circuit breaker BKR-113 are reported to #10 AWG out to the location of the disconnect switches, but are spliced to #12 AWG conductors prior to terminating	NA	Engineering Document Change (ECN) Required	Tap rules per NEC-240.21(b)(1) apply, the installation is NEC compliance. No further action required. An Engineering Change Notice is required to show this configuration on the drawing Reference NEC-240.21

AP TANK FARM

Issue #	National Electric Code (NEC) Issues	Recommendations	Status	Comment
	at the line side of the disconnect switches. The maximum allowable overcurrent protection of #12 conductors is 20A (NEC 240-3(d)). BKR-113 is has a 30A trip rating. The #12 conductors are not adequately protected. However, considering exception allowed by NEC 240-21(b) (1), (feeder taps are not over 10 ft.) the installation is NEC compliant.			H-14-030003, Sh.2
8.1.4	The calculated load of EDS-DP-1 04, based upon assumed assigned load and diversity for the receptacle branch circuits, exceeds the ampacity of the incoming feeder conductors, as well as the rating of the incoming feeder breaker. However, the incoming feeder is adequately protected against overcurrent by the feeder breaker BKR-1 17. The assumed loads assigned to the panel branch circuits by this study may be unrealistically excessive. Note: Assumption 6.11, indicates that 4 out of 5 welding receptacles are loaded at 40kw each.	Limit allowable and actual panelboard loading to a maximum of 190 kVA and 230A per phase. Calculated and allowable panelboard loads can be reduced by control of Individual loads, and/or limiting simultaneous use of available receptacles in panelboard EDS-DP-104.	Field Work Required	The configuration in NEC compliant, installation of a main breaker in panel 104 is recommended to improve selective breaker coordination. Work Order WO-08-2309 has been prepared. ECN-725942-R0 Is being Developed. Reference: H-14-03003 Sh1
8.1.5	The calculated design load flow current (31A) on the glycol chiller feeder on the load side of disconnect switch AP273-GLY-DS-1 01 exceeds the ampacity (30A) of the #10AWG feeder conductors. However, calculated load flow current was based upon the loads given by the panel schedule drawing for panel AP273-EDS-DP-108. Examination of the loads assigned by the panel schedule, however, indicates actual loads may be less. The one line diagram indicates the chiller load includes a 10 HP compressor motor, and two 3/4 HP fans. NEC full load amps for these motors is: 14, 1.6, and 1 .6 Amps respectively. Considering 125% of the largest motor, this is a 20.7A load, which equates to 17.2 kVA and 13.8 kW at 80% pf. The panel schedule for this load indicates a 20 kW load. The existing conductors are	Conductor ampacity based upon calculated load using motor ratings as given on one line diagrams is in compliance with NEC. Verify load values on panel schedule EDS-DP-1 08 for Glycol Chiller (Ckt. 1).	Field Work Required	Walkdown is complete. Need to lift lead for Glycol system to remove the loading on Panel DP-108 ECN-726031-R0 has been Released Work Package TFC-08-2656 has been prepared. Ref: H-14-030003 Sh. 2, R-13

AP TANK FARM

Issue #	National Electric Code (NEC) Issues	Recommendations	Status	Comment
	adequate for the 20.7A load of the three motors, calculated based upon nominal HP rating indicated on one line diagram, and NEC FLA.			
8.1.6	Size of conductors supplying panel AP271-EDS-DP-105 from circuit 32 of AP271-EDS-DP-104 could not be verified during last field walk down (outage required). Documentation depicting the installation of the feeder conductors (and the panel) could not be located. The walk down did, however, verify the rating of the feeder breaker in panel AP271-EDS-DP-104 to be 100A. A #1/0 AWG minimum size conductor is required to carry the calculated load flow for the existing panel DP-1 05 loads. The feeder in this study is represented by #1/0 conductors. While no specific code violation can be noted, based upon the rating (100A) of the feeder breaker in panel AP271-EDS-DP-104, the minimum size of the feeder conductors allowed by code is #1/0 AWG Copper THHN.	Verify size of conductors supplying panel DP-105 to be at least #1/0 AWG.	Engineering Document Change ECN Required	A walk down was performed on 10/6/2008, the conductors from AP271-EDS-DP-104 to panel AP271-EDS-DP-105 is #1 AWG which has an ampacity of 110 A @ 60 degrees C, no NEC violation exists. A document change ECN is required to show the wire size on the drawing. Ref: H-14-030003, Sh.2, Rev.13
8.1.7	Circuit breakers in panel AP241-EDS-DP-110 are mounted in two rows, and oriented in a vertical position. Half of the breakers are arranged such that the UP position of the handle is the "ON" position of the breaker. This is a violation of NEC article 240-81.	Rearrange / replace panel such that breaker handles are operated in horizontal plane, or, use as is with facility management acceptance and approval.	Resolved	The As-Built drawings for the AP Tank Farm were released between 1982 and 1986. The NEC requirement (article 240.81) was not incorporated until the 1987 NEC. These breakers provide overcurrent protection and are operated during facility operation. The qualified electrical workers are familiar with the configuration. Therefore, this configuration considered acceptable.

AP TANK FARM

Issue #	**Demand Load Study Issues**	**Recommendations**	**Status**	**Comment**
NA	NA	NA	NA	NA

Issue #	Load Flow & voltage Drop Study Issues	Recommendations	Status	Comment
NA	NA	NA	NA	NA

Issue #	Short Circuit Study Issues	Recommendations	Status	Comment
NA	NA	NA	NA	NA

Issue #	Protective Device Coordination Issues	Recommendations	Status	Comment
8.5.4	Where existing protective device coordination could be improved using existing equipment, recommended setting changes are provided and summarized in the following Table.	Update Breaker Trip Settings.	Field Work Required	1) BKR 101 trip unit was changed from Amptector I-A Model LIG to Digitrip 910 LIG. The new trip unit is set to the maximum value on the LTD and to 8X on the INST. The vendor curve was used to set the breaker trip settings comparable with recommended trip settings shown in the table. 2) BKR 103 and BKR 116 need to be adjusted during the performance of the MCC Breaker PM. PM# WDL-110917 Prepared

Circuit Breaker Trip Settings, Summary

Breaker	Existing Setting				Recommended Setting			
	LTPU	LTD	STPU	INST	LTPU	LTD	STPU	INST
BKR-101	0.9	4	NA	10	1	28	NA	10
BKR-103	1	Fixed	8	NA	1	Fixed	5	NA
BKR-116	Fixed	Fixed	NA	Lo	Fixed	Fixed	NA	4

AP TANK FARM

Issue #	Protective Device Coordination Issues	Recommendations	Status	Comment
8.5.41	General — Circuit breakers with instantaneous trip characteristics with no intentional delay may not achieve selective coordination with other nearby instantaneous trip devices. This situation is commonly found at a panel or motor control center with thermal-magnetic main and feeder circuit breakers. Short circuits on the feeders with sufficient available fault current may trip the main breaker. This situation is found in the system of this study at MCC-002, and MCC-003. At MCC-002 for example, a short circuit at the annulus exhaust fans may have sufficient fault energy to trip the MCC-002 main breaker. A potential solution is to raise the instantaneous trip setting of the main breaker. In this example of MOC002, however, even the highest available setting (6000A) is insufficient to provide complete coordination of Instantaneous tripping. At MCC-003, there is sufficient available short circuit current at the location of the end use loads to trip the incoming feeder breaker (BKR-1 16) supplying all of MCC 003.	NA	NA	NA
8.5.4.2	Circuit Breaker BKR-1 01 (feeder breaker to MCC-001) — Miscoordination of existing settings is present between breakers BKR-1 01 and BKR-1 04, Existing settings may allow the upstream breaker BKR-1 01 to trip for an overload, or low level fault on MCC-002. The recommended settings for BKR-1 01 provide increased selectivity with downstream devices. Reference time current curve TCC: MCC-001 in Appendices E and P.	The recommended settings for BKR-101 provide increased selectivity with downstream devices	NA	Breaker trip unit was changed from Amptector I-A Model LIG to Digitrip 910. The new trip unit is set to the maximum value on the LTD and to 8X on the INST. There is no setting on the new trip unit of the breaker for a setting of 10x. See8.5.4 above
8.5.4.3	Circuit Breakers BKR-1 03, -104, -127— There is overlap of the low level short circuit trip characteristics of these three breakers. It is possible that a low level fault at MCC-002 may trip the main breaker (BKR-1 03) of MCC-001, before the MCC-002 feeder breaker (BKR-1 04) or MCC-002 main breaker (BKR-127) can clear the fault. There are no available adjustments on the existing breakers that Will affect this condition. Reference Time Current Curve MCC-002 in Appendices E and P.	NA	NA	NA

AP TANK FARM

Issue #	Protective Device Coordination Issues	Recommendations	Status	Comment
8.5.4.4	Circuit Breaker BKR-1 16 (feeder breaker to MCC-003) — Selective coordination with downstream devices can be improved by increasing the instantaneous setting of BKR-1 16 (See 6.5.4). Reference time current curves TCC: SA-CMP-001 and TCC: EDS-DP-106 in Appendices E and P.	NA	NA	The Instaneous trip setting for the breaker cannot be increased as specified. The impact of unplanned outages caused by mis-coordination of this breaker is minimal. No further action is required.

Issue #	Arc Flash Evaluation Study Issues	Recommendations	Status	Comment
NA	NA	NA	NA	NA

7.0 AW TANK FARM

Document Number	Release Date	SKM/PTW Version	NEC Code	Contractor
RPP-8183 Rev 1	03/31/2005	5.0.2.8 Build 2	2002	FFS

	Electrical Study Section	Total Issues	Open Issues Requiring Field Work	Open Issues Requiring a Document Change ECN	Issues Resolved
1	NEC Issues	5	0	1	4
2	Demand Load Study	0	0	0	0
3	Load Flow and Voltage drop Study	0	0	0	0
4	Short Circuit Study	0	0	0	0
5	Protective Device Coordination	2	2	0	0
6	Equipment Evaluation Report	3	0	0	3
7	Arc Flash Evaluation Study	1	1	0	0
	Total	11	3	1	7

AW TANK FARM

Issue #	National Electric Code (NEC) Issues	Recommendations	Status	Comment
8.1.1	Circuit breakers in panels AW241-EDS-DP-100 and AW241-EDS-DP-201A are mounted in two rows, and oriented in a vertical position. Half of the breakers are arranged such that the UP position of the handle is the "OFF" position of the breaker. This is a violation of NEC article 240-81.	Rearrange / replace panel such that breaker handles are operated in horizontal plane, or, use as is with facility management acceptance and approval.	Resolved	The facility was installed with as built drawing released late 1982, the NEC 240-81 which prohibits horizontal mount of the breaker became effective in the 1987 code, and therefore this is considered to be within the code of record. These breakers are not used for routine operation and can be used by qualified electrical technicians only, therefore this configuration considered satisfactory H-14-030002, Sh.1, Rev.18 H-14-030002, Sh.3, Rev.10 H-14-030002, Sh.5, Rev.1 H-14-030002, Sh.13, Rev.6
8.1.2	Supernatant Pumps AW01A-WT-P-001, AW03A-WT-P-008, AW04A-WT-P-011, AW05A-WT-P-014, and AW06A-WT-P-017 are 30HP. The NEC FLA for 30HP motor is 40A. PTW calculated load flow for the motors (assumed to be operating) is approximately 43A. The motor circuit conductors between the receptacle and the motor are indicated to be #8AWG. The NEC ampacity of a #8 flexible cord or cable is at most 40A per NEC Table 400-5(A) and 48A per NEC Table 400-5(B). The calculated load flow to the 30HP motors exceeds the ampacity of the motor circuit conductors. NEC article 430-22 requires motor circuit conductors to be rated for 125% motor FLA (40 x 1.25 = 50A). The #8 conductors are in violation of the NEC.	Increase size of motor circuit conductors (50A minimum).	Document Change ECN Required	1) Pumps AW01A-WT-P-001, AW03A-WT-P-008, AW04A-WT-P-011 have been disconnected per ECN-724186, R.0 and Drawing H-14-030002, sh.1, Rev.17 2) Pump AW06A-WT-P-017 conductors have been changed by ECN-664744, R.0 to show #6 wire is installed. 3) A walkdown was performed on 10/6/2008 on Pump AW05A-WT-P-014 circuit and verified the cable between MCC compartment down to the MCC terminal strip is #8 (About 4 feet), and the cable between the MCC terminal strip to the field is #6, the SOW cable going to the pump is also # 6 cable. The cabinet is compliant with UL-508A, "Industrial Control Panel" Section 29.6(a), internal wiring sizing. This section use 100% FLA for sizing the wires. The Field wiring from the MCC terminal strip to the load is #6 AWG which is good for 55Amp. The field

AW TANK FARM

Issue #	National Electric Code (NEC) Issues	Recommendations	Status	Comment
				installation is NEC compliant. No further action required ECN-664744, R.0. Changed the wire size to show #6AWG wire connected to AW06A-WT-P-017. ECN Required Reference: H-14-030002
8.1.3	Circuit breaker BKR-102 has a 60A trip rating. The feeder originating at BKR-102 is #8 AWG, with an NEC ampacity of 40A. The feeder conductor is not adequately protected by the feeder breaker. This is a violation of NEC 240-3.	Replace feeder with larger conductors (#6 AWG), or replace BKR-102 with one of lower trip rating (40A).	Resolved	Confirmed that a #6 AWG cable is installed. The conductor was replaced by a #6 AWG conductor by ECN-723356, R.0 Reference: See H-14-03002 Sh.1. ECN-723356, R.0
8.1.4	Motor circuits supplied by circuit breakers BKR-104, BKR-105, and BKR-113 are #8 AWG with an NEC ampacity of 40A. The 30HP motors have an NEC FLA of 40A. NEC article 430-22 requires conductors to be rated for 125% FLA (50A). The #8 conductors are not in compliance with NEC article 430-22.	Replace conductors with larger size (#6 minimum).	Resolved	This item is Duplicate of 8.1.2 No action required.
8.1.5	Secondary conductors of transformer XFMR-108 are #4 AWG with NEC ampacity of 70A. These conductors are inadequately protected by the 80A main breaker in panel AW818-EDS-DP-108C. This is a violation of NEC article 240.21(c) (3).	Reduce trip rating of main breaker in panel EDS-DP-108C (70A maximum) or replace transformer XFMR-108 secondary conductors with larger (#3 minimum) conductors.	Resolved	Breaker was changed to 70A breaker by ECN-723497 Rev 0. Reference: H-14-030002, sh.12, Rev.3

AW TANK FARM

Issue #	Demand Load Issues	Recommendations	Status	Comment
	NA	NA	NA	NA

Issue #	Load Flow & Voltage Drop Issues	Recommendations	Status	Comment
8.3.4	The following bus voltage drops exceed the ANSI C84.1 limits (8.3% voltage drop) with 480V maintained at the utility transformer secondary bus: Bus Voltage Drops > 8.3% (480V Assumed at Utility Transformer Secondary Bus) Component Name: High Phase Voltage Drop None:	NA	NA	No bus voltage drops exceed ANSI C84.1

Issue #	Short circuit Study Issues	Recommendations	Status	Comment
	NA	NA	NA	NA

AW TANK FARM

<table>
<tr><th>Issue #</th><th>Protective Device Coordination Issues</th><th>Recommendations</th><th>Status</th><th>Comment</th></tr>
<tr><td>8.5.4</td><td>Where existing protective device coordination could be improved using existing equipment, recommended setting changes are provided and summarized in the following Table.
<table>
<tr><th colspan="11">Circuit Breaker Trip Settings, Summary</th></tr>
<tr><th></th><th colspan="5">Existing Setting</th><th colspan="5">Recommended Setting</th></tr>
<tr><th>Breaker</th><th>LTPU</th><th>LTD</th><th>STPU</th><th>STD</th><th>INST</th><th>LTPU</th><th>LTD</th><th>STPU</th><th>STD</th><th>INST</th></tr>
<tr><td>BKR-100</td><td>1.0</td><td>20</td><td>4</td><td>0.33</td><td>6</td><td>1</td><td>20</td><td>4</td><td>0.33</td><td>12</td></tr>
</table></td><td>Change the instantaneous to 12 max</td><td>Field Work Required</td><td>Need to set breaker 100 to the recommended settings
WDL-110917
Reference:
H-14-030002, Sh.1, Rev.18</td></tr>
<tr><td>8.5.5.2</td><td>The maximum available instantaneous setting will not provide complete short circuit coordination with close-in, high magnitude faults on the feeders downstream of the following MCC-001 feeder breakers: BKR-102, -103, -104, -105, -106, -107, -108, -109, -111, -112, -113, and -115</td><td>Disable the instantaneous trip, if possible. If the instantaneous cannot be disabled, set at maximum (12X). However, the highest available instantaneous setting is insufficient to provide a trip setting greater than the available short circuit current downstream of the feeder breakers, and selectivity may not be achieved for feeder short circuits near the MCC.</td><td>Field Work Required</td><td>Need to verify the breaker settings are consistent with the recommended settings.
WDL-110917
Reference:
H-14-030001, Sh.1 Rev.18
H-14-030001, Sh.2 Rev.11</td></tr>
<tr><td>8.5.5.3</td><td>Breaker BKR-111 is a feeder breaker in MCC-001 upstream of MCC-002 protecting the approximately 350 foot long feeder. The MCC-002 main breaker has no overcurrent trip functions. The maximum available instantaneous setting of BKR-111 will not provide complete short circuit coordination with MCC-002 feeder circuit breakers for high magnitude short circuits on most feeders downstream of MCC-002</td><td>Accept as is</td><td>NA</td><td>Accept as is</td></tr>
</table>

AW TANK FARM

Issue #	Protective Device Coordination Issues	Recommendations	Status	Comment
8.5.5.4	Panel AW273-EDS-DP-108A Main Breaker – The instantaneous trip on the main breaker in panel AW273-EDS-DP-108A (PTW label DP-108A-Main) miscoordinates with the instantaneous trip of the mini mini-power zone primary main breaker BKR-114, and with the instantaneous trip of the branch breaker in panel DP-108A, for high level short circuits on the conductors supplying panel AW273-EDS-DP-108B in the mini power zone	Accept as is	NA	Accept as is
8.5.5.5	Panel AW273-EDS-DP-108A Main Breaker – The instantaneous trip on the main breaker in panel AW273-EDS-DP-108A (PTW label DP-108A-Main) miscoordinates with the instantaneous trip of the mini mini-power zone primary main breaker BKR-114, and with the instantaneous trip of the branch breaker in panel DP-108A, for high level short circuits on the conductors supplying panel AW273-EDS-DP-108B in the mini power zone	Accept as is	NA	Accept as is

Issue #	Equipment Evaluation Issues	Recommendations	Status	Comment
8.6.1	Equipment evaluation based upon load flow current indicates the following non-passing status:	Verify loads on Panel DP-102A and re-assess main breaker rating. Verify loads on Panel DP-102B and re-assess main breaker rating. Verify loads on Panel DP-201A and re-assess main breaker rating.	Resolved	Connected load without application of demand factors exceeds the over current device settings, but is within the device Ampere Interrupting Capacity (AIC). The over current trip is acceptable to facility operation. No action required. References: H-14-030002, sh.1, Rev.18 H-14-030002, sh.3, Rev.10

Device	Status	Comment
	Fail (Applied at > 100% Current Rating)	
BKR-101	X	673A on 600A rating.
BKR-201	X	25A on 20A rating.
DP-102A-MAIN	X	103A on 70A rating
DP-102B-MAIN	X	31A on 30A rating
DP-201A-MAIN	X	62A on 60A rating

AW TANK FARM

<table>
<tr><th>Issue #</th><th>Equipment Evaluation Issues</th><th>Recommendations</th><th>Status</th><th>Comment</th></tr>
<tr><td>8.6.2</td><td>Design load current (50A) on MCC-001 feeders supplying 30HP supernatant pumps WT-P-008 and WT-P-014 exceeds the ampacity (40A per NEC 310-16 at 60 degrees C) of the #8 conductors. This result would be typical of the other similar supernatant pump motor (WT-P-001, WT-P-017) circuits if they were in service (in this study). NEC FLA for 30 HP motors is 40A. NEC 430-22 requires motor circuit conductors to be rated for 125% FLA = 40 x 1.25 = 50A. Equipment evaluation based upon load flow current indicates the following non-passing status.
<table>
<tr><th>Device</th><th>Status</th><th>Comment</th></tr>
<tr><td></td><td>Fail
(Applied at > 100% Current Rating)</td><td>LF = Load Flow</td></tr>
<tr><td>CBL-DP-102B</td><td>X</td><td>33A on 30A feeder.</td></tr>
<tr><td>CBL-DP-201A</td><td>X</td><td>62A on 55A feeder.</td></tr>
<tr><td>WR19</td><td>X</td><td>50A on 40A feeder
See 8.1.2 and 8.6.2.1</td></tr>
<tr><td>WR20</td><td>X</td><td>50A on 40A feeder
See 8.1.2 and 8.6.2.1</td></tr>
<tr><td>WR24</td><td>X</td><td>50A on 40A feeder
See 8.1.2 and 8.6.2.1</td></tr>
<tr><td>WR66</td><td>X</td><td>47A on 40A feeder</td></tr>
</table></td><td>Compliance with NEC 430-22 requires replacement of the conductors with larger (#6 minimum) conductors. See</td><td>Resolved</td><td>This is a duplicate issues described in items 8.1.2 and 8.1.5. By resolving 8.1.2 and 8.1.5 it will resolve issues identified by this item.
1) Pumps AW01A-WT-P-001, AW03A-WT-P-008, AW04A-WT-P-011 have been disconnected per ECN-724186, R.0 and Drawing H-14-030002, sh.1, Rev.17
2) Pump AW06A-WT-P-017 conductors have been changed by ECN-664744, R.0 to show #6 is installed.
3) A walkdown was performed on 10/6/2008 on Pump AW05A-WT-P-014 circuit verified the cable between MCC compartment down the MCC terminal strip is #8 (About 4 feet), and the cable between the MCC terminal strip to the field is #6, the SOW cable going to the pump is also # 6 cable.</td></tr>
<tr><td>8.6.3</td><td>Drawing H-14-030002 Sheet 1 shows the fuse size of fuses in disconnect AW241-EDS-DS-111 as 15A. The field walk down found the fuse sizes to be 1-20A and 1-30A contrary to the drawing. The conductor size was found to be #12 AWG. The 20A fuses were modeled in the report due to the installed installation. There is not enough data available on the load side components to determine the use of 15A vs. 20A fuses. The 30A fuse does not provide the required over current protection for #12 AWG conductors as required by the NEC</td><td>Replace the existing 20A and 30A fuses with 15A fuses in the field to agree with the design and corresponding floodlight fuse installations off of the same circuit</td><td>Resolved</td><td>An electrician verified that 15A fuses are installed on 09/26/2008.
No further action required
Reference:
H-14-030002, Sh.1, Rev.18</td></tr>
</table>

AW TANK FARM

Issue #	Arc Flash Evaluation Study Issues	Recommendations	Status	Comment
8.7.6	The Arc Flash Evaluation indicates all evaluated fault locations in the 480V-208V systems produce arc flash incident energy values below 1.2 cal/cm^2 (PPE Hazard Class 0) except for the following:	NA	NA	NA

Arc Flash Incident Energy > 1.2 cal/cm^2			
Bus Fault Location	Incident Energy (cal/cm^1.2)	PPE Class	Comment
BUS-BKR-100LD	40.4	Dangerous!!!	2 second max. arc exposure time assumed
BUS-ENCL-100	40.2	Dangerous!!!	2 second max. arc exposure time assumed
BUS-BKR-101	39.8	4	2 second max. arc exposure time assumed
EDS-MCC-001	39.8	4	2 second max. arc exposure time assumed
RCPT-WT-P-017	7.01	2	
BUS-WT-P-017	6.69	2	2 second max. arc exposure time assumed
RCPT-WT-P-001	6.64	2	2 second max. arc exposure time assumed
XFMR-111-SEC	6.61	2	2 second max. arc exposure time assumed
BUS-WT-P-001	6.31	2	2 second max. arc exposure time assumed
BUS-POLE-NP1A	4.43	2	2 second max. arc exposure time assumed
C5662P-PRI	4.41	2	2 second max. arc exposure time assumed
RCPT-WT-P-014	4.27	2	2 second max. arc exposure time assumed
BUS-WT-P-014	4.15	2	2 second max. arc exposure time assumed

AW TANK FARM

Issue #	Arc Flash Evaluation Study Issues	Recommendations	Status	Comment
	BUS-DP-111 | 3.26 | 1 | Line Side Fault Location | | | DP-111-MAIN | 6.68 | 2 | Note: Assumed maximum arc exposure time is 2 seconds.			
8.7.7	The high arc flash incident energies associated with the first four bus locations in the table above are due to the high long time delay and instantaneous settings of breaker BKR-100. The original trip unit possessed a short time trip function that would allow selective coordination for overloads and low value short circuits as well as reduce trip times and available arc flash energies for high short circuit currents. A replacement trip unit recently installed does not include a short time trip function	Replace trip unit with one possessing short time trip functions	Field Work Required	The currently installed breaker 100, has a trip unit that includes a short timer setting. This setting being set under item 8.5.4. Breaker 101 needs to be replaced with a breaker with a trip unit possessing a short time trip function. Work Package TFC-WO-08-2310 is prepared. An ECN is required. Reference: H-14-030002, Sh.1, Rev.18

8.0 AY TANK FARM

Document Number	Release Date	SKM/PTW Version	NEC Code	Contractor
RPP-CALC-24468 Rev 0	04/21/2005	5.0.2.8 Build 2	2002	FFS

	Electrical Study Section	Total Issues	Open Issues Requiring Field Work	Open Issues Requiring a Document Change ECN	Issues Resolved
1	NEC Issues	6	2	0	4
2	Demand Load Study	1	0	0	1
3	Load Flow and Voltage drop Study	1	0	0	1
4	Short Circuit Study	0	0	0	0
5	Protective Device Coordination	1	1	0	0
6	Equipment Evaluation Report	2	1	0	1
7	Arc Flash Evaluation Study	0	0	0	0
	Total	11	4	0	7

AY TANK FARM

Issue #	National Electric Code (NEC) Issues	Recommendations	Status	Comment
8.1.1	Conductors (PTW CBL-DS-101) between disconnect switch F8X696 and disconnect switch DS-I01 are assumed to be #8 AWG to match adjacent conductor sizes. Ampacity of# 8 AWG at 60 deg C is 40A, however, conductor protection is provided by 200A fuses in F8X696.	Verify conductor and fuse size. Re-conductor or change fuse size as required.	Resolved	This cabinet was updated per ECN-725269-R0. This ECN was released in 2/2008 and worked completed in 6/2008. No issues remain. Reference: ECN-725269-R0 H-14-030006, sh.1, Rev.14
8.1.2	Conductor (PTW CBL-DP-105) between transformerXFMR-105 and panel DP-105 is #4 AWG with 60 deg C ampacity of 70A and 75 deg C ampacity of 85A. Downstream main breaker of DP-105 is 100A. The 100A breaker does not provide adequate overcurrent protection for the #4 transformer secondary tap conductors per NEC 240.21 (C).	Decrease main breaker rating to 90A if rated for 75 deg C, 70A if rated for 60 deg C.	Field Work Required	The secondary conductor size is #4 which is good for 70A at 60 deg according to NEC table 310-16. AY241-EDS-DP-105 main breaker needs to be replaced with 70A max to comply with NEC 240-21 (C) There is no immediate hazard since the total AY241-EDS-DP-105 load of 14660W @240VAC=61A which does not exceed the cable rating of 70A but the main breaker need to be replaced to comply with the NEC code. Work package TFC-WO-08-2312 has been assigned. ECN Required. Reference: H-14-030006, sh.1, R. 14 H-14-030006, sh.7, R. 3
8.1.3	Wire run WR362 is a #8 AWG tap conductor originating at TBX-W314-07 and terminating at disconnect switch DS-202 with a 60 deg C ampacity of 40A and a 75 deg C ampacity of50A. Fuses in DS-202 are 45A and do not provide adequate overcurrent protection for the 60 deg C ampacity of the #8 conductors. (Ref. H-2-64347 Sh. 3 Rev 4, H-2-64348	Verify 60A disconnect switch DS-202 is rated for 75 deg C wiring. If not, increase wire size or decrease fuse rating.	Resolved	Contacted Allen-Bradley Manufacturer on 10/8/2008, been informed that the fuse disconnect switch rated for 14 to 4 AWG IEC 947 60 or 75 deg copper wire. In this case using 75deg of NEC table 310-16 the cable is good for 50A. No further action required

AY TANK FARM

Issue #	National Electric Code (NEC) Issues	Recommendations	Status	Comment
	Sh. 1 Rev 9)			Reference: H-14-030006, Sh.1, Rev.14, H-2-64347 Sh 3, Rev.5 H-2-64348 Sh 1, Rev.10
8.1.4	AY801A-EDS-MCC-001 feeder breaker BKR-152 trip rating is 30A. Downstream conductors (PTW WR319a, WR319b) are #12 AWG with an NEC maximum overcurrent protection limit of 20A. The 30A feeder breaker does not provide adequate overcurrent protection for the #12 conductors. (Ref. H-2-64341 Sh. 1 Rev 8, ECN W314-50·028)	Change BKR-152 to have a 20A trip rating.	Field Work Required	Work package TFC-WO-08-2313 has been submitted to change the breaker. ECN-726043-R0 is being developed. Reference: H-14-030006, Sh.1, Rev.14
8.1.5	AY801A-EDS-MCC-001 feeder breaker BKR-152 trip rating is 30A. Downstream floodlight transformers XFMR-102 and XFMR-103 are 5kVA with primary full load amps (FLAs) of 10.4A. The 30A trip rating ofBKR-152 does not provide adequate transformer primary overcurrent protection per NEC 450.3 (B).	Change BKR-152 to have a 20A trip rating.	Resolved	This is a duplicate of 8.1.4 above. Reference: H-14-030006, Sh.1, Rev.14
8.1.6	Wire run WR363 is a #6 AWG tap conductor originating at TBX-W314-07 and terminating at disconnect switch DS-203 with a 60 deg C ampacity of 55A and a 75 deg C ampacity of 65A. Fuses in DS-203 are 60A and do not provide adequate overcurrent protection for the 60 deg C ampacity of the #6 tap conductors. (Ref. H-2-64347 Sh. 3 Rev 4, H-2-64348 Sh. I Rev 9)	Verify 60A disconnect switch DS-203 is rated for 75 deg C wiring. If not, increase wire size or decrease fuse rating.	Resolved	This is a duplicate of 8.1.3. Contacted Allen-Bradley Manufacturer on 10/8/2008, been informed that the fuse disconnect switch rated for 14 to 4 AWG IEC 947 60 or 75 deg copper wire. In this case using 75deg of NEC table 310-16 the cable is good for 65A No further action required Reference: H-14-030006, Sh.1, Rev.14 H-2-64347 Sh 3, Rev.5 H-2-64348 Sh 1 , Rev.10

AY TANK FARM

Issue #	Demand Load Issues	Recommendations	Status	Comment
8.2.2	The PTW demand load study indicates a calculated connected load of approximately 315 kVA, a demand load of approximately C6528P/C6529P/C6530P based upon the configuration and operating conditions of the PTW model.		Resolved	Unnecessary loads were physically disconnected to resolve the issue.

Issue #	Load Flow Study Issues	Recommendations	Status	Comment
8.3.4	The voltage drop calculation indicates the following bus voltage drops exceed the ANSI C84.1 limits (8.3% voltage drop) with 480V maintained at the utility transformer secondary bus:	NA	Resolved	Actions were taken to reduce the load, Reference: TE-06-020 R.2, ECN-724335 ECN-723341

Bus Voltage Drops > 8.3%	
(480 Assumed at Utility Transformer Secondary Bus)	
Component Name	High Phase Voltage Drop (%)
BUS-HVAC	9.04
BUS-DP-105	8.77
BUS-DP-103	8.55
BUS-DP-102	8.53

Issue #	Short circuit Study Issues	Recommendations	Status	Comment
	NA	NA	NA	NA

AY TANK FARM

<table>
<tr><th>Issue #</th><th>Protective Device Coordination Issues</th><th>Recommendations</th><th>Status</th><th>Comment</th></tr>
<tr><td>8.5.4.4</td><td>Although they meet the NEC requirements for overcurrent protection, comparison of the cable thermal damage curve with the time-current characteristics of the upstream protective device indicates the following cables may not be adequately protected from damage due to overloads or short circuits. Cable damage temperature is assumed to be 150 deg. C with an initial operating temperature of75 deg. C. Field verification of cable insulation may be warranted.
<table>
<tr><th>Cable Name</th><th>Reference TCC</th><th>Wire Size</th><th>Protective Device (Upstream)</th><th>Comment</th><th></th><th></th></tr>
<tr><td>CBL-BKR-152LD</td><td>FL-POLE1</td><td>12</td><td>BKR-152 C-H, HFD,30A</td><td>Not NEC compliant see 8.1.4</td><td>See 8.1.4</td><td>Duplicate</td></tr>
<tr><td>WR319a</td><td>FL-POLE1</td><td>12</td><td>BKR-152 C-H, HFD,30A</td><td>Not NEC compliant see 8.1.4</td><td>See 8.1.4</td><td>Duplicate</td></tr>
<tr><td>WR319b</td><td>FL-POLE2</td><td>12</td><td>BKR-152 C-H, HFD,30A</td><td>Not NEC compliant see 8.1.4</td><td>See 8.1.6</td><td>Duplicate</td></tr>
<tr><td>WR363</td><td>RCPT-203</td><td>6</td><td>BKR-153 C-H, HFD,100A</td><td>see 8.1.6</td><td></td><td>Duplicate</td></tr>
<tr><td>WR323A</td><td>DP-102</td><td>40</td><td>BKR-155 C-H, HFD,250A</td><td>Transformer secondary tap, downstream protection.</td><td>Acceptable</td><td>Resolved</td></tr>
<tr><td>WR322</td><td>RCPT-121</td><td>10</td><td>BKR-157 C-H, HFD,240A</td><td></td><td>New fuse installed 15A</td><td>Resolved</td></tr>
<tr><td>WR361</td><td>RCPT-201</td><td>10</td><td>BKR-160 C-H, HFD,70A</td><td>Tap conductor, downstream protection.</td><td>New 25 Amp Fuse</td><td>Resolved</td></tr>
<tr><td>WR362</td><td>RCPT-202</td><td>8</td><td>BKR-160 C-H, HFD,70A</td><td>Tap conductor, downstream protection.</td><td>New 45 Amp Fuse</td><td>Resolved</td></tr>
</table></td><td>NA</td><td>Resolved</td><td>A field walkdown and inspection was performed and determined that conductor insulation in all circuits is rated for 90 deg. C and wire sizing was consistent with recommended ampacities per NEC 2008 table 310.16.
There was no indication of excessive heat or discoloration on the wire insulation or terminations.
Annual preventive maintenance is performed on the Motor Control Center (MCC) that provides power for these branch circuits. This preventive maintenance program performs a check of the tightness of all connection along with a visual inspection of each of the individual conductors for signs of deterioration, heat, discoloration of conductors.
Reference:
SKM System Analysis Inc. purpose and guidelines for basic over current protection philosophy for insulated power cables
IEEE 242-2001 chapter 9 Cable ProtectionH-14-030006, Sh.1.</td></tr>
</table>

AY TANK FARM

Issue #	Protective Device Coordination Issues							Recommendations	Status	Comment
	WR170	DP-110	4	BKR-163 C-H, HJD, 200A	Tap conductor, downstream protection.	Replace cable with 3/0 or reduce the breaker to 20A	Field Work			
	CBL-CP-202	EF-001	10	BKR-110 C-H, FD, 50A	Motor circuit	Replace breaker to 30A	Field Work			
	CBL-EF-001	EF-001	10	BKR-110 C-H, FD, 50A	Motor circuit		Duplicate			
	CBL-ENCL-201	HTR-003	4	BKR-163 C-H, HJD, 200A	Tap conductor, downstream protection.		Duplicate			
	CBL-ENCL-301	HTR-004	4	BKR-164 C-H, HJD, 200A	Tap conductor, downstream protection.	Replace BKR-164 to 70A trip	Field Work			
	CBL-ENCL-302	EF-002	10	BKR-164 C-H, HJD, 200A	Motor feeder tap.	Duplicate	Duplicate			
	CBL-EF-002	EF-002	10	BKR-113 C-H, FD, 50A	Motor circuit	Change breaker BKR-113 to 30A trip	Field Work			
	WR180	DP-111	4	BKR-164 C-H, HJD, 200A	Tap conductor, downstream protection.	Duplicate	Duplicate			
	CBL-DS-101	DP-105	8	FU-F8X696 BUSS, RES, 200A	See 8.1.1	Duplicate	Duplicate			

AY TANK FARM

<table>
<tr><th>Issue #</th><th>Equipment Evaluation Issues</th><th>Recommendations</th><th>Status</th><th>Comment</th></tr>
<tr><td>8.6.1</td><td>Protective equipment evaluation based upon load flow current indicates the following protective equipment is applied beyond its continuous current rating:
<table>
<tr><th colspan="3">Continuous Current Ratings Exceeded</th></tr>
<tr><th>Component Name</th><th>Rating Exceeded</th><th>Comment</th></tr>
<tr><td>C8X550</td><td>17A on 12A rating</td><td>315 kVA on 225 kVA Transformer Rating</td></tr>
<tr><td>FU-DS-105</td><td>16.6A on 15A rating</td><td>Pole 1 Flood lights</td></tr>
<tr><td>FU-DS-106</td><td>16.8A on 15A rating</td><td>Pole 2 Flood lights</td></tr>
</table></td><td>NA</td><td>Resolved</td><td>This is a duplicate of item 8.1.4
System is lightly loaded according to the meter data (68%) The protective devices will trip (Open) to Protect downstream equipment.
No further action required.</td></tr>
<tr><td>8.6.2</td><td>Non-Protective equipment evaluation based upon load flow current indicates the following equipment is applied beyond its continuous current rating:
<table>
<tr><th colspan="3">Non Protective Device Equipment Evaluation, Load Flow, Failed Equipment</th></tr>
<tr><th>Device</th><th>Criteria Failure</th><th>Comment</th></tr>
<tr><td>CBL-DP-105</td><td>85A > 70A rating</td><td>Review Panel DP-105 loads</td></tr>
<tr><td>C6528-9-30P</td><td>17A > 9.4A rating</td><td>Rating of 225 kVA service transformer exceeded</td></tr>
<tr><td>XFMR-105</td><td>36A > 31.3 rating</td><td>15kVA rating exceeded. Review Panel DP-105 loads</td></tr>
</table></td><td>Verify loads assigned to panel DP-105 as recorded on H-14-030003 Sh. 7 Rev 3. Note that panel schedule loads are given in Watts with no stated power factor. In general, this calculation assumed a power factor of 90%.</td><td>Resolved</td><td>Loads were removed using ECN 722089-R0
Reference
H-14-030006 Sh3</td></tr>
</table>

9.0 AZ 701/702 FACILITIES

Document Number	Release Date	SKM/PTW Version	NEC Code	Contractor
RPP-CALC-24466 Rev 0	12/9/2005	Version 5.0.3.0 Build 1	2005	FFS

	Electrical Study Section	Total Issues	Open Issues Requiring Field Work	Open Issues Requiring Document Change ECN	Issues Resolved
1	NEC Issues	0	0	0	0
2	Demand Load Study	0	0	0	0
3	Load Flow and Voltage drop Study	0	0	0	0
4	Short Circuit Study	0	0	0	0
5	Protective Device Coordination	0	0	0	0
6	Equipment Evaluation Report	0	0	0	0
7	Arc Flash Evaluation Study	0	0	0	0
	Total	0	0	0	0

AZ 701/702 FACILITIES

Issue #	National Electric Code (NEC) Issues	Recommendations	Status	Comment
	NA	NA	NA	No Issues Identified

Issue #	Demand Load Issues	Recommendations	Status	Comment
	NA	NA	NA	No Issues Identified

Issue #	Load Flow & Voltage Drop Issues	Recommendations	Status	Comment
8.2	There were some voltage drop warnings issued by the PTW Load Flow and Voltage Drop Analysis. The Equipment Evaluation Reports did report some failures based upon voltage drop criteria problems and the 80 percent rule for breaker/cable loading, for more specific information, see Section 9.0 and Appendices D & H.	NA	NA	NA

Issue #	Short Circuit Study Issues	Recommendations	Status	Comment
	NA	NA	NA	No Issues Identified

Issue #	Equipment Evaluation Issues	Recommendations	Status	Comment
	NA	NA	NA	No Issues Identified

Issue #	Arc Flash Evaluation Study	Recommendations	Status	Comment
	NA	NA	NA	No Issues Identified

10.0 AZ TANK FARM

Document Number	Release Date	SKM/PTW Version	NEC Code	Contractor
RPP-CALC-24465 Rev 0	4/26/2005	5.0.2.8 Build 2	2005	FFS

	Electrical Study Section	Total Issues	Open Issues Requiring Field Work	Open Issues Requiring a Document Change ECN	Issues Resolved
1	NEC Issues	0	0	0	0
2	Demand Load Study	0	0	0	0
3	Load Flow and Voltage drop Study	0	0	0	0
4	Short Circuit Study	0	0	0	0
5	Protective Device Coordination	0	0	0	0
6	Equipment Evaluation Report	0	0	0	0
7	Arc Flash Evaluation Study	0	0	0	0
	Total	0	0	0	0

Issue #	National Electric Code (NEC) Issues	Recommendations	Status	Comment
	NA	NA	NA	No Issues Identified

Issue #	Demand Load Issues	Recommendations	Status	Comment
	NA	NA	NA	No Issues Identified

AZ TANK FARM

Issue #	Load Flow & voltage Drop Issues	Recommendations	Status	Comment
8.2	There were no 1 PH or 3 PH voltage drop warnings issued by the PTW Load Flow and Voltage Drop Analysis. The Equipment Evaluation Reports did report some failures based upon voltage drop criteria problems and the 80 percent rule for breaker/cable loading, for more specific information, see Section 9.1 and Appendices D & H.	NA	NA	NA

Issue #	Short Circuit Study Issues	Recommendations	Status	Comment
	NA	NA	NA	No Issues Identified

Issue #	Equipment Evaluation Issues	Recommendations	Status	Comment
	Equipment Evaluation was run for both 1 PH and 3 PH. The 1 PH and 3 PH reports show "Base Project" device/equipment failures. The term "Fail" in the Equipment Evaluation Report does not mean the equipment has or is going to fail, but that the equipment failed to pass the NEC/IEEE evaluation guidelines. For more specific information, see Section 9.1 and Appendix H.	NA	NA	No Issues Identified

Issue #	Arc Flash Evaluation Study	Recommendations	Status	Comment
	NA	NA	NA	No Issues Identified

11.0 C-109 RETRIEVAL PROJECT

Document Number	Release Date	SKM/PTW Version	NEC Code	Contractor
RPP-CALC-32223 Rev 0	04/19/2007	Version 6.0.2.8	2005	ARES Corporation

	Electrical Study Section	Total Issues	Open Issues Requiring Field Work	Open Issues Requiring a Document Change ECN	Issues Resolved
1	NEC Issues	0	0	0	0
2	Demand Load Study	0	0	0	0
3	Load Flow and Voltage drop Study	0	0	0	0
4	Short Circuit Study	0	0	0	0
5	Protective Device Coordination	0	0	0	0
6	Equipment Evaluation Report	0	0	0	0
7	Arc Flash Evaluation Study	0	0	0	0
	Total	0	0	0	0

C-109 RETRIEVAL PROJECT

Issue #	National Electric Code (NEC) Issues	Recommendations	Status	Comment
	NA	NA	NA	No Issues Identified

Issue #	Demand Load Issues	Recommendations	Status	Comment
	NA	NA	NA	No Issues Identified

Issue #	Load Flow & voltage Drop Issues	Recommendations	Status	Comment
	NA	NA	NA	NA

Issue #	Short Circuit Study Issues	Recommendations	Status	Comment
	NA	NA	NA	No Issues Identified

Issue #	Equipment Evaluation Issues	Recommendations	Status	Comment
	NA	NA	NA	No Issues Identified

Issue #	Arc Flash Evaluation Study	Recommendations	Status	Comment
	NA	NA	NA	No Issues Identified

12.0 SY TANK FARM

Document Number	Release Date	SKM/PTW Version	NEC Code	Contractor
RPP-8185 Rev 0	6/24/2004	3.8.1.0 Build 2 4.0.2.6 Build 1	1999	FFS

	Electrical Study Section	Total Issues	Open Issues Requiring Field Work	Open Issues Requiring a Document Change ECN	Issues Resolved
1	NEC Issues	17	8	0	9
2	Demand Load Study	3	0	0	3
3	Load Flow and Voltage drop Study	1	0	0	1
4	Short Circuit Study	0	0	0	0
5	Protective Device Coordination	8	1	0	7
6	Equipment Evaluation Report	4	1	0	3
7	Arc Flash Evaluation Study	0	0	0	0
	Total	33	10	0	23

SY TANK FARM

Issue #	National Electric Code (NEC) Issues	Recommendations	Status	Comment
8.1.1	Breaker F8X703 - The existing Long Time Pick Up setting (1.0), with a 2000A sensor provides a trip setting of 2000A. This setting does not provide adequate overcurrent protection for the incoming conductors. The incoming conductors are (2) parallel 750 kcmil, with a 75 deg. C ampacity of 950A. NEC 230-90 requires the conductors to be protected from overcurrent with a rating not greater than the conductor ampacity.	As a minimum, lower the LTPU setting to the minimum available value of 0.5. This setting is still 50A above the maximum allowed by the NEC, but is the lowest available setting of the existing equipment. However, this configuration is not in compliance with present code. Options include: replace conductors; replace breaker trip unit with one with lower settings; replace breaker current sensors (CTs); or Facility design authority may seek determination of acceptability.	Resolved	The lower LTPU setting for Breaker F8X703 has been set to the 0.5 value. Reference: WT-O6166
8.1.2	Breaker F8X702 - The existing available settings do not provide overcurrent protection for the upstream incoming conductors as required by NEC 230-90, The 2000A sensor and the 0.5 LTPU setting (1000A) is not adequate to protect the parallel 750 kcmil conductors to their 75 deg C ampacity of 950A.	Existing configuration is not in compliance with present code. Replace conductors, replace breaker trip unit, replace breaker current sensors (CTs), or Facility design authority may seek determination of acceptability.	Field Work Required	Replace the tip unit Current Transformer for breakers F8X702 & 703, and adjust trip settings to a maximum of 625Amp. Then close tie-in breaker 4B. Work Package TFC-WO-08-2316 has been initiated. ECN Required Reference: H-2-46424, Sh.1, R.11
8.1.3	Fuse (20A) in starter for EX-C-1 is much larger than required by the load, and is a violation of NEC 430-52	Replace fuse with 7.5A (max) time delay (preferred), or 9A (max) non-time delay fuse.	Field Work Required	Replace the fuse with one that has a rating not exceeding the value given in the NEC Table 430.52. The full load amp (FLA) for 1 ½ motor, 3-Phase, 480 VAC is 3.0A (NEC Table430-250. The percentage of full load current is 300% (3.0A X 300%=9.0A) for non-time delay fuse and 175% (3.0A X 175%= 5.25A, next fuse size up to 7.5A) for a time-delay fuse. Work Package Required ECN Required Reference: H-2-46424, Sh.2, Rev.9 NEC Table 430.52

SY TANK FARM

Issue #	National Electric Code (NEC) Issues	Recommendations	Status	Comment
8.1.4.	Secondary conductors on transformer SY241-EDS-XFMR-102 do not posses overcurrent protection required by NEC 240-21 (c), The sum of the downstream overcurrent devices (100A fuses in SY241-EDS-DS-130 and 70A fuses in SY-EDS-DS-131) exceeds the ampacity (150A) of the secondary conductors (wire run HMS-15)	Install larger secondary conductors, or decrease the sum of the downstream fuse ratings to 150A or less. (See paragraph 8.1.5 below)	Field Work Required	Breaker SY272-EDS-BKR-117 has been opened to de-energize the Data Acquisition & Control System (DACS) Trailer. An ECN has been prepared to lift the leads at load side of breaker SY272-EDS-BKR-117 Work package Number TFC-WO-08-2316 has been submitted to perform this work Reference: H-14-030031, sh.3, Rev.9 H-14-030031, Sh.27, Rev.1
8.1.5	Fuses in disconnect switch SY241-EDS-DS-131 supplying SY461-VT-HVAC-3 do not provide required overcurrent protection of downstream conductors (wire run HMS-17). Installed fuses are 70A, cable ampacity is 55A @ 60 deg C	Reduce the rating of the fuses to 55A or less	Resolved	This item is addressed by item 8.1.4 above Reference: H-14-030031, sh.3, Rev.9
8.1.6	Cable HMS-107 is not adequately protected from overcurrent by the 200A rating of the upstream breaker BKR-129 in MCC-003. Ampacity of the *1/0* conductors is 150A @ 75 deg. C	Replace BKR-129 with one of lower current (trip) rating, 150A or less	Field Work Required	Reduced the load by de-energizing the SHIMs cabinets and determined that the connect load does not exceed the ampacity of the HMS-1207 conductor. Work package TFC-WO-08-2317 has been submitted ECN Required Reference: H-14-030031, sh.4, Rev.2 H-14-030031, sh.20, Rev.4 H-14-030031, sh.21, Rev.2
8.1.7	Cable HMS-19 on secondary of transformer EDS-XFMR-105 does not have overcurrent protection required by NEC 240-21 (c). Cable ampacity is 310A @ 75 deg. C. The sum of the overcurrent ratings of the devices downstream (EDS-DS-142, -149, & -150) is 480A	Increase size of HMS-19 conductors, or decrease the sum of the ratings of the downstream overcurrent devices. (See paragraph 8.1.8)	Resolved	This issue is addressed by 8.16. Above.

SY TANK FARM

Issue #	National Electric Code (NEC) Issues	Recommendations	Status	Comment
8.1.8	Cable HMS-19C supplying disconnect switch EDS~DS-150 is not adequately protected from overcurrent as required by NEC 240-21 (b) (1) (a). The cable ampacity is 70A, and terminates at the disconnect switch containing 80A fuses. The 80A fuses do not provide the required overcurrent protection.	Replace the fuses with ones of lower rating, 70A or less	Resolved	The fuse was changed from 80A to 40A to comply with the NEC code. No further action required Reference: ECN-722997, R.0.. H-14-030031, sh.4, Rev.2 H-14-030031, sh.4, R.2
8.1.9	Primary conductors on transformer SY276-EDS-XFMR-106 supplying panel EDS-DP-116 are not adequately protected from overcurrent by upstream devices as required by NEC 240-3. Conductor ampacity is 40A. Upstream disconnect switch EDS-DS-152 contains 60A fuses.	Replace the 60A fuses with 40A fuses	Resolved	This issue is addressed by 8.1.4 above. Reference: H-14-030031, sh.5, Rev.6
8.1.10	Transformer SY241-EDS-XFMR-107 does not have overcurrent protection as required by NEC 450-3(b). Secondary protection is required unless primary protection is provided at 125% transformer FLA or less. Primary protection is greater than 125% FLA, therefore 125% maximum secondary overcurrent protection is required. Transformer FLA is 31A. 125% FLA is 39A. The only existing secondary overcurrent device is the 80A main breaker in panel SY241-EDS-DP-118. Existing secondary overcurrent protection exceeds the maximum allowed.	Install lower rated (40A or less) main breaker in panel EDS-DP-118. (See 8.1.11 below)	Field Work Required	The main breaker in DP-118 should be replaced with 40A breaker to comply with the NEC code 450-3(b). ECN-726117-R0 is being developed Work Package TRC-WO-08-2318 has been submitted to replace the breaker. Reference: H-14-030031, sh.5

SY TANK FARM

Issue #	National Electric Code (NEC) Issues	Recommendations	Status	Comment
8.1.11	Breaker F8X703 – The existing Long Time Pick Up setting (1.0) with a 2000 A sensor, provides a trip setting of 2000A. This setting does not provide adequate overcurrent protection for the incoming conductors. The incoming conductors are (2) parallel 750 kcmil, with a 75 deg C ampacity of 950A. NEC 230.90 requires the conductors to be protected from overcurrent with a rating not greater than the conductor ampacity.	As a minimum lower the LTPU setting to the minimum available value of 0.5. This setting is still 50A above the maximum allowed by the NEC, but is the lowest available setting of the existing equipment. However this configuration is not in compliance with present code. Options include: replace breaker trip unit with one with lower settings; replace breaker current sensors (CTs); or Facility design authority may seek determination of acceptability.	Resolved	This issue is addressed by 8.1.10.
8.1.12	Secondary conductors on transformer EDS-XFMR-107 supplying panel EDS-DP-118 are not provided adequate overcurrent protection required by NEC 240-21 (c). Ampacity of secondary conductors is 70A. Downstream overcurrent device is 80A main breaker in panel EDS-DP-118. The 80A main breaker does not provide the required (70A or less) overcurrent protection	Install lower rated (70A or less) main breaker in panel EDS-DP-118.	Resolved	This issue is addressed by 8.1.10. Install a 40A main breaker in panel SY241-EDS-DP-118.
8.1.1.3	Cable HMS-24 is not adequately protected from overcurrent by upstream devices as required by NEC 240-3. Cable ampacity is 40A. Upstream overcurrent device(s) are 50A fuses in disconnect switch EDS-DS-146	Replace 50A fuses with 40A (or less) fuses	Resolved	This issue is addressed by 8.1.6. This circuit feeds SHIMS Cabinet SY103-SHM-PNL-005. This equipment have been de-energized. Reference: H-14-030031, sh.4, Rev.2

SY TANK FARM

Issue #	National Electric Code (NEC) Issues	Recommendations	Status	Comment
8.1.14	Primary conductors on 50kVA transformer 242-S- T-1 are not adequately protected against overcurrent by upstream breaker in MCC-E-001 cubicle 01, based upon the assumption of paragraph 6.4 above, and NEC 240-3. The ampacity of the AWG #1 cable is 110A @ 60 deg. C. Upstream circuit breaker is a 150A frame, with 125A trip rating. While the 150 frame circuit breaker may allow use of the #1 cable at its 75 deg. C ampacity (130A), it is assumed by this study that the 50 kVA transformer (60 FLA) dictates use of the 60 deg. C conductor rating	Verify transformer primary connections are rated for use with 75 deg. C wire, or replace the 125A trip circuit breaker with a breaker rated at 110A or less	Field Work Required	Verify transformer primary connection lugs are rated for use with 75 deg. C wire, or replace the 125A trip circuit breaker with a breaker rated at 110A or less ECN Required Work Package Required Reference: H-2-46424, Sh.4, Rev.14.
8.1.15	Primary conductors on 50kVA single phase transformer EDS-XFMR-100 are not adequately protected against overcurrent by upstream breaker BKR-104 in EDS-MCC-001 cubicle B4, as required by NEC 240-3. The ampacity of the AWG #2 cable is 95A @ 60 deg. C. Upstream circuit breaker is a 150A frame, with 125A trip rating.	Replace the 125A trip circuit breaker with a breaker rated at 100A or les	Field Work Required	The cable between XFMR-100 and BKR-104 is size #2 which is good according table 310-16 to 95A @ 60 deg. The upstream breaker is 125AT. The cable is not protected. There is no immediate hazard since the SHIMS panel SY102-SHM-PNL-005 is OFF. Removal the SHIMS panel load it will bring the total connected load to less the maximum current for the cable. ECN Required) Work Package: TFC_WO-08-2319 has been submitted to replace the breaker. Reference: H-14-030031, Sh.1, Rev.13

SY TANK FARM

Issue #	National Electric Code (NEC) Issues	Recommendations	Status	Comment
8.1.16	Calculated Connected Load, and Demand Load (6.5 kVA) on transformer EDS-XFMR·101 supplying panel EDS-DP-105 exceeds the 5 kVA rating of the transformer. However, no conductors are overloaded	Verify circuit loads given in panel schedule. Identify any operational constraints or interlocks that will allow consideration of non-coincidental loads. Assess need for larger transformer. Recognize that upstream primary transformer protection (10A fuse in disconnect DS-125) provides overcurrent protection at less than 100% of transformer's rated full/load current	Resolved	The drawing was updated to the current field condition under ECN-726036-R0. This resolves the issue no further action required. Reference: H-14-030031 sh 12
8.1.17	Conductors (#4 AWG) supplying 50HP motor K1-5-3 from MCC-E-001 cubicle C5 have an ampacity of 70A. NEC 430-22 requires motor conductors with ampacity of 125% motor FLA. 50HP motor FLA(65Ax1.25=81A is 81A. Conductors are inadequately sized for the load	Increase size of motor branch circuit conductors	Field Work Required	K1 is the primary exhaust fan for 242-S. Work Package TFC-W-08-0456 has been submitted to determine and correct the K-1 fan motor pigtail wire size and type. Reference: H-14-46424, Sh.3, R.11,

SY TANK FARM

Issue #	Demand Load Issues	Recommendations	Status	Comment
8.2.1	The demand load study for transformer C6647P indicates a calculated demand load of approximately 1210 kVA, based upon the PTW model Actual electric utility meter data for the last 2 years (Ref. Appendix U) indicates: an average consumption of 87 kW; a (monthly average) demand of 269 kW; and a maximum demand of 569 kW. Assuming a 90% power factor, these equate to 97 kVA; 299 kVA; and 632 kVA respectively. The metered (averaged) demand load is approximately 25% of the PTW calculated demand load.	NA	Resolved	This issue is resolved by issue number:8.1.2
8.2.2	The demand load study for transformer C6648P indicates a calculated demand load of approximately 340 kVA, based upon the PTW model. Actual electric utility meter data for the last 2 years (Ref. Appendix U) indicates: an average consumption of 40 kW; a (monthly average) demand of 70 kW; and a maximum demand of 119 kW. Assuming a 90% power factor, these equate to 44 kVA; 78 kVA; and 132 kVA respectively. The metered (Averaged) demand load is approximately 23% of the PTW calculated demand load.	NA	Resolved	This issue is resolved by issue number:8.1.2
8.2.3	Actual total metered (averaged) demand load (299 + 78 =377 kVA) for the tank farm is approximately 24% of the total demand load (1210 + 340 =1550 kVA) calculated from the PTW mode/(s) in this study. Note that the PTW calculated demand load includes the 498 kW Flush Tank Heater HTR-302C-2.	NA	Resolved	This issue is resolved by issue number:8.1.2

SY TANK FARM

<table>
<tr><th>Issue #</th><th>Load Flow & Voltage Drop Issues</th><th>Recommendations</th><th>Status</th><th>Comment</th></tr>
<tr><td>8.3.1</td><td>PTW load flow and voltage drop output reports (for Case 1) are located in Appendices C, K, and N, Appendix C and K contain output reports for PTW Version 3.8 and 4.0 balanced load flow and voltage drop study. Appendix N contains output report for the Version 4.0 unbalanced study.</td><td></td><td>NA</td><td></td></tr>
<tr><td>8.3.2</td><td>Guidelines (NEC 21 0-19(a) FPN No.4 and 215-2(d) FPN No.2) for allowable load flow voltage drop are 3% in a feeder, and 5% total at furthest downstream bus (equipment location). These voltage drops do not include voltage drops due to utility system and service transformer impedances.</td><td></td><td>NA</td><td></td></tr>
<tr><td>8.3.3</td><td>For this study, the voltage drop at the secondary of the service transformers will be subtracted from the associated total bus voltage drops to determine acceptance of the voltage drops of the distribution system downstream of the service transformers. PTW calculated voltage drops for the service transformers are approximately 2.2% for TXEE-002 serving SWG-E-001 Bus #1 with a secondary bus voltage drop of approximately 1.1 %; and 5.0% for TX-E-001 serving SWG-E-001 Bus #2 with a secondary bus voltage drop of 3.9%.</td><td></td><td>NA</td><td></td></tr>
<tr><td>8.3.3.1</td><td>Load flow voltage drop studies performed by PTW 3.8.1.0 and 4.0, (ignoring the voltage drop(s) up stream of the secondary of the service transformer) indicate the following violations of the above voltage drop guidelines:
<table>
<tr><th colspan="4">Load Flow Voltage Drop Excursions > 5% for Bus, 3% for Branch</th></tr>
<tr><th>PTW Bus Name</th><th>LFVD (%) Bus</th><th>LFVD (%) System Net (Neglect 13.8kV System)</th><th>Comments</th></tr>
<tr><td>XFMR-106-SEC</td><td>6.03</td><td>5.43</td><td rowspan="7">Load flow associated with loads assigned to EDS-DP-116</td></tr>
<tr><td>BUS-ATS-101</td><td>6.18</td><td>5.58</td></tr>
<tr><td>BUS-DS-153</td><td>6.26</td><td>5.66</td></tr>
<tr><td>BUS-EDS-DP-116</td><td>6.3</td><td>5.7</td></tr>
<tr><td>BUS-UPS-100</td><td>6.45</td><td>5.85</td></tr>
<tr><td>BUS-DP-115</td><td>6.49</td><td>5.89</td></tr>
<tr><td>BUS-DS-155</td><td>6.51</td><td>5.91</td></tr>
</table></td><td></td><td>Resolved</td><td>As noted in issue 8.3.4, the measured loads for this facility are between 23 and 25% of the connected loads There are no changes planned to either the facility or its operation that will increase the electrical load.
No Action Required.</td></tr>
</table>

SY TANK FARM

Issue #	Load Flow & Voltage Drop Issues				Recommendations	Status	Comment
	BUS-HVAC-102	6.41	5.81				
	BUS-DP-119	6.89	6.29				
	BUS-TRLR-PNL	10.32	6.43	Load flows associated with assumed load on Change Trailer.			
	CHNG-TRLR-SEC	10.09	6.2				
	BUS-DP-112	11.8 (A Ph)	Approx 10	Load flows associated with EDS-DP-112.			
	BUS-DS-141	11.5 (A Ph)	Approx 10				
	BUS-DS-140	9.6 (A Ph)	Approx 8				
	BUS-DS-137	9.6 (A Ph)	Approx 8	241-SHM-PNL-005 Feeder			
	BUS-241PNL-005	10.9 (A Ph)	Approx 9				
	BUS-DS-138	9.6	Approx 8	01A-SHM-PNL-005 Feeder			
	BUS-01APNL-005	10.3 (A Ph)	Approx 9				
	BUS-DS-139	9.6 (A Ph)	Approx 8	WST-ENCL-103 Feeder			
	BUS-ENCL-103	9.7 (A Ph)	Approx 8				
	PTW Branch Name	LFVD (%) Branch					
	EDS-XFMR-106	4.23					
	XFMR-CHNG-TRLR	3.79		Load flows associated with assumed load on Change Trailer			
	CBL-DP101CKT10	7.0 (A Ph)					
	CBL-DP1 01 CKT5	5.5 (A Ph)					
	CBL-DP101CKT9	4.5 (A Ph)					
	HMS-20	3.8 (A & B Ph)					
	HMS-6	3.6 (A & C Ph)					
	WR-1	3.2 (A & C Ph)					
	WR-2	3.6 (A & C Ph)					

SY TANK FARM

Issue #	Load Flow & Voltage Drop Issues	Recommendations	Status	Comment
8.3.3	Four of the above noted load flow voltage drop excursions are associated with the loads assumed for the change trailer served by Welding Outlet 1. With no other load information available, the PTW model assumes the 25 kVA transformer supplying the change trailer is fully loaded, resulting in load currents that may be greater than actual		NA	
8.3.4	Note that voltage drop is a function of load flow current, and that metered total (demand) load is approximately 23% and 25% of calculated demand load (based upon loading assumptions of this study) for SWG-E-001 Bus #1 and Bus #2 respectively. Based upon the metered demand load, load flow voltage drops will be significantly less than those calculated by this study model.		NA	

Issue #	Short Circuit Study Issues	Recommendations	Status	Comment
8.4.1	Short circuit study output reports are located in Appendices D, L, and O.	NA	NA	
8.4.2	Calculated available short circuit currents at SWG-E-001 Bus #1 were found to be approximately 11 kA for 3phase, and single-line-to-ground. Short circuit currents were reduced to below 9kA at downstream bus EDSMCC-003.	NA	NA	
8.4.3	Calculated available short circuit currents at SWG·E-001 Bus #2 were found to be approximately 12 kA for 3phase, and single-line-to-ground. Short circuit currents were reduced to below 10 kA at downstream bussesMCC·E-001, EDS-MCC-001, and Power Panelboard D.	NA	NA	

SY TANK FARM

Issue #	Protective Device Coordination Issues	Recommendations	Status	Comment
8.5.1	Time Current Curves for protective devices are located in Appendix E (from PTW 3.8.1.0) and Appendix P (from PTW 4.0).	NA	NA	
8.5.2	Existing and Recommended protective device settings are provided in Appendix F (PTW 3.8.1.0) and Q (PTW 4.0).	NA	NA	
8.5.3	Most of the circuit breakers in the 241SY Farm associated with this study have fixed trip settings. Some of the Larger thermal-magnetic breakers with fixed long-time trips may have adjustable instantaneous settings.	NA	NA	
8.5.4	Where existing protective device coordination could be improved using existing equipment, recommended setting Changes are provided and summarized in the following Table.	NA	NA	
8.5.5	Specific coordination issues are discussed below:	NA	NA	
8.5.5.1	General - Circuit breakers with instantaneous trip characteristics with no intentional delay may not achieve selective coordination with other nearby instantaneous trip devices. This situation is commonly found at a panel or motor control center with thermal-magnetic main and feeder circuit breakers. Short circuits on the feeders with sufficient available fault current may trip the main breaker. This situation is found in the system of this study at EDS-MCC-003-A / EDS-MCC-003-B and main breaker BKR-113; DP-108; EDS-MCC-001 and main breaker BKR- 112; EDS-MCC-002 and upstream manual transfer switch MTS-100; for very high level short circuits close to MCC-E-001: and DP-116.	NA	NA	
8.5.5.2	Breaker F8X703 - The existing ground fault delay settings do not selectively coordinate with downstream	Recommendation: Increase F8X703 Ground Fault Delay	Resolved See 8.1.1	See 8.1.1

SY TANK FARM

Issue #	Protective Device Coordination Issues	Recommendations	Status	Comment
	feeder Breakers (BKR'2A, BKR-2B, BKR-2C, BKR-2D, BKR-3B).	to 0.25 seconds, and set feeder breaker(s) Ground Fault Delay to 0.10 seconds.		
8.5.5.3	Breaker F8X703 - The existing instantaneous setting does not coordinate with several downstream circuit breakers (See discussion in 8.5.5.1 above).	Increase F8X703 instantaneous setting to 12. This will provide selective tripping for short circuits on switchgear feeders, but will sacrifice fast tripping of the main for Switchgear bus faults and backup protection. Due to the falloff of available short circuit current, the "12" setting will effectively disable the instantaneous trip function for all but high magnitude (close) short circuits.	Resolved See 8.1.1	See 8.1.1
8.5.5.4	Breaker F8X702 - The Long Time Pickup and Long Time Delay settings of F8X702 and those of breaker BKR-6C do not provide selective coordination for overloads and short circuits. Pickup of main breaker F8X702 is presently set at 1000A. Pick up of BKR-6C is presently 960A. Additionally, the LTD curves are nearly identical. The maximum allowed LTPU setting of F8X702 is dictated by the NEC overcurrent protection requirements for the incoming conductors, and should not exceed 950A.	As a minimum, increase the LTD setting of F8X702 from 3.5 to 6. If the load requirements of the feeder will allow, decreasing the LTPU of BKR-6C will provide increased selectivity with F8X702 for low overloads.	Resolved See 8.1.1	See 8.1.1
8.5.5.5	Fuses CATH-DS-100 and CATH-D8-101 - These fuses are rated with a 30A trip. They are supplied by a common 20A circuit breaker (#23) in panel DP-108. The 20A circuit breaker will likely trip before either fuse in response to an overload or short circuit downstream of the fuses.	Accept as is.	Resolved	Accept as is.

SY TANK FARM

Issue #	Protective Device Coordination Issues	Recommendations	Status	Comment
8.5.5.6	Panel DP-E-002 - Electronic displays on main and feeder breakers in this panel were inoperable at the time of the field walk down, hence, trip settings could not be determined/verified. Recommended settings are provided, based upon information given on one line drawings, cable ampacities, and consideration of selective coordination.		Field Work Required	Work Package TFC-WO-08-2367 has been submitted to repair the displays.
8.5.5.7	BKR-B4 - The 1000A rating of MCC-E-001 main breaker BKR-B4 does not provide selective coordination with upstream breaker DP-E-002-Ckt1 (600A), nor the main breaker of panel DP-E-002 (1000A). However, BKR-B4 and DP-E-002-Ckt1 are in series in the dedicated incoming feeder to MCC-E-001, and the lack of selectivity between the breakers on the feeder may be tolerable (due to the sizing and trip values for the breakers). Additionally, the feeder breaker DP-E·002Ckt1 should isolate the panel main breaker from tripping due to feeder overloads.	Accept as is.	Resolved	Accept as is.
8.5.5.8	Panel EDS-DP-113 - There is little if any selective coordination between the overcurrent protective devices upstream of panel DP-113 to motor control center EDS-MCC·003-B. Short circuits on or downstream of panel DP-113 may trip the feeder breaker BKR-129 at the MCC. Overloads at the panel may trip any of several upstream devices.	NA	Resolved	Accept as is.
8.5.5.9	Fuse (20A) in starter for EX-C-1 does not coordinate with upstream branch breaker BKR-D2 in Panelboard D. Also, the 20A fuse is much larger than required by the load, and is a violation of NEC 430-52.	Replace fuse with 7.5A (max) time delay (preferred), or 9A (max) non-time delay fuse.	Resolved	This issue addressed by 8.1.3

SY TANK FARM

<table>
<tr><th>Issue #</th><th>Equipment Evaluation Issues</th><th>Recommendations</th><th>Status</th><th>Comment</th></tr>
<tr><td>8.6.1</td><td>Equipment evaluation output reports based upon short circuit ratings are located in Appendices G1 from PTW 3.8.1.0, and R1 from PTW 4.0.</td><td>NA</td><td>NA</td><td></td></tr>
<tr><td>8.6.1.1</td><td>No equipment was noted to be applied outside its short circuit ratings.</td><td>NA</td><td>NA</td><td></td></tr>
<tr><td>8.6.2</td><td>Equipment evaluation (feeders and transformers) based upon current rating and load flow current is presented in Appendices G2 and R2. Warnings noted by these reports include the following:</td><td>NA</td><td>NA</td><td></td></tr>
<tr><td>8.6.2.1</td><td>The following feeders were noted to be applied beyond their ampacity ratings:
<table>
<tr><th>Branch</th><th>Design Load (A)</th><th>Ampacity (A)</th><th>Comment</th></tr>
<tr><td>CBL-ATS-101-LD</td><td>97</td><td>95</td><td>Supplies EDS-DP-116.</td></tr>
<tr><td>CBL-DS-153</td><td>98</td><td>95</td><td>Supplies EDS-DP-116.</td></tr>
<tr><td>CBL-XFMR-106-S</td><td>98</td><td>95</td><td>Supplies EDS-DP-116.</td></tr>
<tr><td>WR-E003, E004</td><td>1737</td><td>950</td><td>Service Lateral supplying SGR-E-001 Bus #2</td></tr>
<tr><td>CBL-XFMR-106-P</td><td>42</td><td>40</td><td>EDS-XFMR-106 primary supply.</td></tr>
<tr><td>CBL-E-001-C5</td><td>81</td><td>70</td><td>K1-5-3 motor feeder. NEC violation. 125% x 65 FLA = 81A</td></tr>
<tr><td>HMS-117</td><td>69</td><td>55</td><td>Supplies VT-HVAC-3. PTW load assumed. Investigate and determine installed load.</td></tr>
<tr><td>CBL-HVAC-103</td><td>69</td><td>55</td><td>Supplies VT-HVAC-103. PTW load assumed. Investigate and determine installed load.</td></tr>
<tr><td>WR-FT104,FT105</td><td>749</td><td>620</td><td>Supplies HTR-302C-2</td></tr>
</table></td><td>NA</td><td>Resolved</td><td>A field walkdown and inspection was performed and determined that conductor insulation in all circuits is rated for 90 deg. C and wire sizing was consistent with recommended ampacities per NEC 2008 table 310.16.
There was no indication of excessive heat or discoloration on the wire insulation or terminations.
Annual preventive maintenance is performed on the Motor Control Center (MCC) that provides power for these branch circuits. This preventive maintenance program performs a check of the tightness of all connection along with a visual inspection of each of the individual conductors for signs of deterioration, heat, discoloration of conductors.
Reference:
SKM System Analysis Inc. purpose and guidelines for basic over current protection philosophy for insulated power cables
IEEE 242-2001 chapter 9 Cable Protection
H-14-030031, Series</td></tr>
</table>

SY TANK FARM

Issue #	Equipment Evaluation Issues	Recommendations	Status	Comment
8.6.2.2	Calculated demand load on service transformer C6647P is approximately 250% of transformer rating.	NA	Resolved	This issue is addressed by issue number 8.1.2. The transformer demands will be reduced to 625A by the actions taken in 8.1.2.
8.6.2.3	Calculated demand load on transformer XFMR-101 is approximately 158% of transformer rating.	NA	Resolved	Walk down performed Document Change ECN726036-R0 was released to update the drawings. Reference: H-14-030031 Series
8.6.2.4	Calculated demand load on transformer XFMR-106 is approximately 108% of transformer rating.	NA	Field Work	Walk down was performed and determined that demand load on the transformer is 75%No further action required. Reference: H-14-0300031 Sh23 H-14-0300031 Sh 5

SY TANK FARM

Issue #	Equipment Evaluation Issues Special case 2	Recommendations	Status	Comment
9.1	Case 2 assumes all SWG-E-001 loads (Bus 1 & 2) are served by a single incoming line and associated transformer. Incoming line breaker 1B and bus tie breaker 4B are closed. Incoming line breaker 78 is open.	NA	NA	NA
9.2	Analysis is limited to load flow and voltage drop, and device evaluation based upon load flow.	NA	NA	NA
9.3	Calculation output reports for Case 2 are contained in appendices M through FF, with a summary and comparison of balanced three phase branch currents and voltage drops in appendix FF.	NA	NA	NA
9.4	The impacts to balanced branch load flows and bus voltage drops of the Case 2 configuration is summarized in Appendix FF. Downstream of the switchgear SWG-E-001, there were no significant changes in load flow. The largest included a 16A increase in the feeder supplying EDS-MCC-003-A and , and a 16A decrease in the current drawn by 498kW heater HTR-302C-2. Calculated overall total (balanced) load current decreased by nearly 20A(@480V). The significant impact of shifting the entire system load onto one incoming line and service.	NA	NA	NA

Issue #	Arc Flash Evaluation Issues	Recommendations	Status	Comment
	NA	NA	NA	NA

Task# WRPS-PER-2008-0167.24

E-STARS[R] Report
Task Detail Report
07/08/2009 1015

TASK INFORMATION			
Task#	WRPS-PER-2008-0167.24		
Subject	WRPS-PER-2008-0167; RES; Perform work package TFC-WO-08-2315 Deliverable: Copy of work record.		
Parent Task#	WRPS-PER-2008-0167	**Status**	Open
Reference	WRPS-PER-2008-0167	**Due**	08/22/2009
Originator	^PER CAs	**Priority**	Medium
Originator Phone		**Category**	PER
Origination Date	12/30/2008 0929	**Generic1**	None
Remote Task#		**Generic2**	None
Deliverable	PER Review	**Generic3**	None
Class	None	**View Permissions**	Global
Instructions	*No Instructions*		

ROUTING LISTS

1	Corrective Action	Active
	Perform work package TFC-WO-08-2315 Deliverable: Copy of work record. Reference: Issue 8.1.2 SY Farm RESPONSIBLE MANAGER: When this corrective action is complete, enter a closure statement in E-STARS and close the E-STARS subtask. Refer to the Problem Evaluation Request procedure TFC-ESHQ-Q-C-C-01, Section 4.4 for closure documentation requirements	
	• Brooks, Rocky L - Assign - Awaiting Response - Due Date - 08/15/2009 0000 *Instructions:*	
	• Knight, Mark A - Review - Awaiting Response - Due Date - 08/19/2009 0000 *Instructions:*	

ATTACHMENTS

Attachments	1. DNFSB Electrical Letter Attachment.pdf 2. DNFSB Electrical Letter.pdf 3. Link to PER 4. RE_ WRPS-PER-2008-0167 _RES_.msg 5. Request to Extend WRPS-PER-2008-0167_24 _RES_ _ CH2M-PER-2008-1300 _TUF_.msg 6. WRPS-PER-2008-0167 EVENT & CAUSAL FACTORING CHART.pdf

COMMENTS

Poster	^PER Coordinator (Glaman, Linda R) - 06/19/2009 1414
	Due Date Extension
	Extenc CA .24 to 8-15-09 PER attaeched email request. LBG Per direction of Mark Knight please extend the following PERs as described below: WRPS-PER-2008-0167.24 – Please extend to 08/15/09 as work will be performed during the SY Farm outage. David Bragg for M Knight 6/17/09

Task# WRPS-PER-2008-0167.24

TASK DUE DATE HISTORY			
Modified	06/19/2009 1415 - ^PER Coordinator	**New Due Date**	08/15/2009 0000
Modified	12/30/2008 0929 - ^PER CAs	**New Due Date**	05/26/2009 0000
Modified	12/30/2008 0929 - ^PER CAs	**New Due Date**	10/03/2009 0000

SUB TASK HISTORY

No Subtasks

-- end of report --

Message

From: Bragg, David A
Sent: Wednesday, June 17, 2009 4:46 PM
To: ^WRPS Corrective Action Group
Cc: Knight, Mark A
Subject: Request to Extend WRPS-PER-2008-0167.24 (RES) & CH2M-PER-2008-1300 (TUF)

Per direction of Mark Knight please extend the following PERs as described below:

WRPS-PER-2008-0167.24 – Please extend to 08/15/09 as work will be performed during the SY Farm outage.

CH2M-PER-2008-1300 – Please extend to 07/16/09. The work package has been completed and an ECN released to document the condition of AN101-WSTA-RISER-048. However a revision is planned to the ECN to provide documentation for the recommended course of action for riser repair.

Thank you,

David Bragg
Base Operations Maintenance Engineering

Task# WRPS-PER-2008-0167.25

E-STARS[R] Report
Task Detail Report
07/08/2009 1016

TASK INFORMATION			
Task#	WRPS-PER-2008-0167.25		
Subject	WRPS-PER-2008-0167; RES; Prepare ECN to install the correct size fuses at the EC-1-1 Fan Motor. Deliverable: Electronic copy of released ECN. Re		
Parent Task#	WRPS-PER-2008-0167	**Status**	CLOSED 06/24/2009
Reference	WRPS-PER-2008-0167	**Due**	05/27/2009
Originator	^PER CAs	**Priority**	Medium
Originator Phone		**Category**	PER
Origination Date	12/30/2008 0929	**Generic1**	None
Remote Task#		**Generic2**	None
Deliverable	PER Review	**Generic3**	None
Class	None	**View Permissions**	Global
Instructions	*No Instructions*		

ROUTING LISTS

1	Corrective Action	Inactive
	Prepare ECN to install the correct size fuses at the EC-1-1 Fan Motor. Deliverable: Electronic copy of released ECN. Reference: Issue 8.1.3 SY Farm RESPONSIBLE MANAGER: When this corrective action is complete, enter a closure statement in E-STARS and close the E-STARS subtask. Refer to the Problem Evaluation Request procedure TFC-ESHQ-Q-C-C-01, Section 4.4 for closure documentation requirements	
	• Nguyen, Toan H - Assign - Completed with comments - 05/20/2009 1520 *Instructions:*	
	• Knight, Mark A - Review - Concur with comments - 05/22/2009 1228 *Instructions:*	
	• ^Independent Assessment Review(Penick, Lee R) - Review - Concur - 05/27/2009 1054 *Instructions:*	

ATTACHMENTS

Attachments	1. DNFSB Electrical Letter Attachment.pdf 2. DNFSB Electrical Letter.pdf 3. Link to PER 4. RE_ WRPS-PER-2008-0167 _RES_.msg 5. WRPS-PER-2008-0167 EVENT & CAUSAL FACTORING CHART.pdf 6. WRPS-PER-2008-0167.25 CLOSURE ECN-726283-R1.pdf 7. WRPS-PER-2008-0167.25 Released ECN-726283.pdf

COMMENTS

Poster	Nguyen, Toan H (Jones, Terry) - 05/20/2009 1520

Task# WRPS-PER-2008-0167.25

	Completed
	ECN-726283R0 released 03/19/2009 and ECN-726283R1 released 04/10/2009 were prepared to install the correct size fuses at the EC-1-1 Fan Motor. Attached file, WRPS-PER-2008-0167.25 Released ECN-726283.pdf, is electronic documentation of completed action. This action completes this task.
Poster	Knight, Mark A (Bragg, David A) - 05/22/2009 1228
	Concur
	ECN-726283-R0 resolves the problem with incorrect fuse sizes at the subject fan by permanently disconnecting this obsolete equipment, which has no present or future use at the 242-S Evaporator. ECN-726283-R1 updates the associated panel schedule (to show the load removed). Both ECNs are attached as objective evidence. The PER originator declined involvement in the disposition of WRPS-PER-2008-0167.
Poster	^PER CAs (Owen, Annette) - 06/24/2009 1402
	CLOSED
	Closure statement and attached documentation are adequate to close this action.

TASK DUE DATE HISTORY

Modified	12/30/2008 0929 - ^PER CAs	**New Due Date**	05/27/2009 0000
Modified	12/30/2008 0929 - ^PER CAs	**New Due Date**	10/03/2009 0000

SUB TASK HISTORY

No Subtasks

-- end of report --