This document was too large to scan as a single document. It has been divided into smaller sections.

Section 3

Document Information			
Document #	FOIA-2009-0051	Revision	
Title	FREEDOM OF INFORMATION ACT REQUEST (FOI 2009-0051)		
Date	09/09/2009		
Originator	RIEHLE DC	Originator Co.	DOE-RL
Recipient	CARPENTER T	Recipient Co.	HANFORD CHALLENGE
References			
Keywords	OCE, FOIA, SENSITIVE, PRIVATE CITIZEN		
Projects			
Other Information			

Save

Problem Evaluation Request (PER)

WRPS-PER-2008-0309
In Process/Work

PER No	Date of Discovery	Time of Discovery (24:00)	Project
WRPS-PER-2008-0309	12/02/2008	14:01	Eng-BO

Location

All Tank Farms

How Was Problem Discovered

Engineering Review or Evaluation

Description of Concern or Problem

Note that this PER is associated with WRPS-PER-2008-0040, which was originally assigned a PER signficance level of "PER with Resolution." However, subsequent evaluation of the PER issue has revealed that a TSR violation occurred. Hence, the sigificance level of the PER should be re-classified as "SIG PER." In order to satisfy the significance level requirements, which include the need to perform a root cause analysis, this new PER was generated. The corrective actions associated with WRPS-PER-2008-0040 will become part of this PER once it has been screened and a root cause analysis is completed. A decision will then be made with respect to what will be done with the original PER (whether it will be cancelled, have its remaining open corrective actions withdrawn, etc., etc.). All applicable fields in this PER are essentially identical to WRPS-PER-2008-0040 with a few neccessary exceptions to reflect the aforementioned changes.

Per the Tank Farm Documented Safety Analysis (DSA), Safety Significant valves used for double valve isolation are required to meet seat leakage requirements of FCI 70-2-2003, Control Valve Seat Leakage, for Class VI valves, or equivalent. The test media is air or nitrogen gas at 50-125 degrees F and the test media pressure is the maximum rated differential pressure across the valve plug or 50 lbs/in2, whichever is less. In 2005, documentation for valves already installed in the field was compiled and evaluated. Documentation was prepared that stated the valves met the criteria of FCI-70-2-2003.

On 10/09/2008, after review of the documentation that was used to classify valves as Safety Significant, it was determined that the valves were tested with water, not air or nitrogen and at varying pressures. Additionally, documentation discussing the equivalency of the testing performed to that specified in FCI 70-2-2003, as allowed by the DSA, could not be identified. As a result, it was initially determined that this condition represents a potential inadequacy of the documented safety analysis (PISA). Subsequent review determined that the issue identified in the PER resulted in a TSR violation.

Requirement Not Satisfied	Source Document Number

Equipment Identification Number	System Identification
various	Waste Transfer

Immediate actions Taken or Planned

Initially declared a PISA and issued an occurrence report - Group 3B, Documented Safety Analysis Inadequacies, (2) SC3: Declaration of a potential inadequacy of the documented safety analysis (a potential positive USQ), per 10 CFR 830.203(g). The occurrence report was subsequently changed to an SC2 after it was determined that a TSR violation had occurred.

An Operations Red Arrow entry was made that reads as follows: Do not credit Safety Significant Isolation Valves for double valve isolation during transfers until documentation is in place that demonstrates the valves meet the criteria for Evaluated Waste Transfer or Safety Significant Isolation valves.

Prepared WRPS-PER-2008-0040. Multiple corrective actions were launched.

Recommended Corrective actions

Assign this PER a significance level of "SIG PER." Perform root cause analysis, and evaluate the need to launch/complete corrective actions associated with WRPS-PER-2008-0040.

Originator Contact

Please contact Pete Owen (originator of WRPS-PER-2008-0040) as he has indicated that he wants to review the associated corrective actions at closure to ensure they were effective.

Originators Name	Originators ID	Originators Phone	Date Initiated
Bragg, David A	H0013790	(509) 373-2899	12/02/2008

SHIFT OPERATIONS REVIEW

Title

TSR Violation

How Discovered	Agency

self-ID result of event			
Reportability	**SSC Operability**	**Operability Review**	**Comp Measures Req**
SC-2	Operable but degraded or non-conforming	TSR Impact	
Describe actions Taken or Recommended			
Base Ops SO categorized Occurrence, and Red arrow stating "do not credit Safety Significant isolation valves for double valve isolation during transfers" remains in logbook.			
SO Reviewer Name	**SO Reviewer ID**	**SO Reviewer Phone**	**SO Review Date**
Strasser, David W	H0075556	(509) 373-2689	12/03/2008
SCREENING			
PER Significance Level			
Significant			
Independent Assessment Review	**Occurrence Report Number**	**Externally Identified**	
No	EM-RP--WRPS-TANKFARM-2008-0001	No	
Assigned Responsible Manager	**Facilities Rep / SSO**	**Safety Management Rep**	
Knight, Mark A			
Program		**Safety Management Program**	
• ^N/A^		• Engineering Configuration Management	
PER Screening Comments			
See also WRPS-PER-2008-0040 cc: Tracy Parchen, Pete Owen, Shaun Waters			
Causal Code			
A3B3C01	Human Performance LTA Knowledge Based Error Attention was given to wrong issues		
A4B5C04	Management Problem Change Management LTA Risks/consequences associated with change not adequately reviewed/assessed		
A5B2C08	Communications LTA Written Communications Content LTA Incomplete/situation not covered		
MGT/Comm/Train	**Human Performance**	**GEMS**	**Equip/Eng/Other**
Failed Barrier	**ORPS Code**	**Functional Area**	**Work Process**
	PISA	Engineering	• DSA/Documented Safety Analysis • Engineering Evaluation • Test Control
ISMS	**Consequence Code**		
Perform work within the controls	• Engineering Requirement - Lack of/not adequately implemented or identified requirement • Safety Basis Issues - Inadequacies in the Documented Safety Analysis (DSA). • Technical Safety Requirement (TSR) - TSR missed or undefined		
PER Screening Chair	**PER Screening Chair ID**	**PER Screening Chair Phone**	**PER Screening Date**
Brown, Nancy L	H0088797	(509) 373-0992	12/03/2008

PAAA REVIEW			
PAAA Screening	**PAAA Codes**	**Function Codes**	
Potential PAAA Reportable	• 10 CFR 830.201	• TSR/Unplanned LCO	
NTS Report Number	**NTS Report Date**		
Repetitive / Recurrent	**Programmatic**	**Intentional Violation / Misrepresentation**	
No	No	No	

PAAA Screening Comments

PAAA Reviewer Name	**PAAA Review Date**	
Anderson, Craig E	12/05/2008	
PAAA Approver Name	**PAAA Approve Date**	
Anderson, Craig E	12/05/2008	

SENIOR MANAGEMENT REVIEW/CONCURRENCE

TF Operations Morning Leadership Call

None. 12/5/09

Instructions for Responsible Manager

Perform RCA & CAP with End Point Assessment Criteria in accordance with TFC-ESHQ-Q_C-C-01, PER & TFC-ESHQ-Q_ADM-C-11, Root & Common Cause Analysis & Corrective Action Planning. 'Save' Causal tab on PER. Ensure PER is on ESRB agenda.

Senior Management	Sr Mgmt ID	Sr Mgmt Phone	Sr Mgmt Review Date
Owen, Annette	H0054042	(509) 372-0533	12/05/2008

CAUSE ANALYSIS

Description of Occurrence

Per the Tank Farm Documented Safety Analysis (DSA), Safety Significant valves used for double valve isolation are required to meet seat leakage requirements of FCI 70-2-2003, Control Valve Seat Leakage, for Class VI valves, or equivalent. The test media is air or nitrogen gas at 50-125 degrees F and the test media pressure is the maximum rated differential pressure across the valve plug or 50 lbs/in2, whichever is less. In 2005, documentation for valves already installed in the field was compiled and evaluated. Documentation was prepared that stated the valves met the criteria of FCI-70-2-2003.

On 10/09/2008, after review of the documentation that was used to classify valves as Safety Significant, it was determined that the valves were tested with water, not air or nitrogen and at varying pressures. Additionally, documentation discussing the equivalency of the testing performed to that specified in FCI 70-2-2003, as allowed by the DSA, could not be identified. As a result, it was initially determined that this condition represents a potential inadequacy of the documented safety analysis (PISA). Subsequent review determined that the issue identified in the PER resulted in a TSR violation.

Extent of Condition

The extent of condition involves all valves used for double valve isolation in the Tank Farms. A review of the waste transfer systems was performed to identify those valves. The results of the review are listed below:

AN Farm - A total of 43 valves were identified and are documented in TE-08-069, "Technical Evaluation of the 241-AN Tank Farm "EVALUATED" Waste Transfer Isolation Valves for Double Valve Isolation."

AP Farm - A total of 16 valves were identified and are documented in TE-08-063, "Technical Evaluation of the 241-AP Tank Farm "EVALUATED" Waste Transfer Isolation Valves for Double Valve Isolation."

AP Farm evaluated valves - A total of 30 valves were identified and are documented in TE-05-002, "Technical Evaluation of the 241-AP Tank Farm EVALUATED" Waste Transfer Isolation Valves."

AW Farm - A total of 33 valves were identified and are documented in TE-08-062, "Technical Evaluation of the 241-AW Tank Farm "EVALUATED" Waste Transfer Isolation Valves for Double Valve Isolation."

AZ Farm - A total of 14 valves were identified and are documented in TE-08-061, "Technical Evaluation of the 241-AZ Tank Farm "EVALUATED" Waste Transfer Isolation Valves for Double Valve Isolation."

SY Farm - A total of 71 valves were identified and are documented in draft document TE-08-071, "Technical Evaluation of the 241-SY Tank Farm "EVALUATED" Waste Transfer Isolation Valves for Double Valve Isolation."

241-S-A Valve Pit - A total of 8 valves were identified and are documented in TE-08-064, "Technical Evaluation for Flow-Tek

DVI Valves Located in the 241-S-A Valve Pit."

C Farm - A total of 26 valves were identified and are documented in TE-08-065, "Technical Evaluation of C110 "EVALUATED" Waste Transfer Isolation Valves for Double Valve Isolation.

Safety Significance

The subject valves are discussed in Section 4.4.6, "Isolation Valves for Double Valve Isolation." These valves are identified as safety-significant SSCs for the waste transfer leak accident (Section 3.3.2.4.13 of the DSA) when used to physically disconnect piping using double valve isolation. The valve functions to decrease the frequency or consequences of a waste transfer leak accident. Note that an evaluated valve performs the same safety function as a safety-significant isolation valve [prevent, or limit to an inconsequential volume, the misroute of waste through the valves into physically disconnected piping where controls (transfer leak detection systems, waste transfer associated structure covers, backflow prevention systems) are not required to prevent or mitigate waste transfer leak accidents].

The subject valves were installed beginning in 1999 through 2005, and were successfully leak tested using air or water, but used various test pressures and did not have cyclic testing completed in full accordance with FCI-70-2/VI-2003.

There have been no waste transfer leaks from the time the valves were installed to the present as a result of the issue identified in this PER. Additionally, there have been no injuries to tank farms personnel or exposures to tank waste.

Generic Implications

One generic implication from the review of this event is that there are other places in the SB where the term "or equivalent" is used and may represent a similar weakness. Corrective action CATPR-01-03 will address this concern. Another generic implication is the issue of other potential inadequacies in documentation for all Tank Farm SS SSCs due to weaknesses in the processes used to establish and dedicate SS equipment. An assessment will be performed to analyze this process and establish improvements, including extent of condition surveys and remedial actions for existing impacted equipment (ref WRPS-PER-2008-0279).

Remedial Corrective Action

A Justification for Continued Operation (JCO #TF-09-01) was developed and approved for continued operation using existing SS systems during planned activities in light of commercial grade dedication issues.

The following actions were initiated in WRPS-PER-2008-0040 and have been completed:

1) Actionee: Erhart, Michael F
E-STARS Number: WRPS-PER-2008-0040.1
Action: Complete evaluation of all S Farm (241-S-A Valve Pit) valves to be used as waste transfer valves in double valve isolation in Closure Projects.
Deliverable - Engineering technical evaluations documenting the acceptance criteria of the valves.

2) Actionee:Quintana, Michael S
E-STARS Number: WRPS-PER-2008-0040.2
Action: Revise the SEL with respect to safety-significant and evaluated valves.
Deliverable – Copy of changes made to SEL.

3) Actionee: Blaak, Todd M
ESTARS Number: WRPS-PER-2008-0040.3
Action:Complete evaluation of all valves to be used as waste transfer valves in double valve isolation in the following tank farms and in the cross-site transfer line: 241-AN; 241-AP, 241-AW; 241-AZ; and 241-SY.
Deliverable - Engineering technical evaluations documenting the acceptance criteria of the valves.

4) Actionee:Parkman, David B
ESTARS Number: WRPS-PER-2008-0040.4
Action: Complete technical evaluation of all valves to be used as waste transfer valves in double valve isolation for Tank C-110.
Deliverable - Engineering technical evaluation documenting the acceptance criteria of the C-110 valves.

5) Actionee: Everett, Brian K
E-STARS Number: WRPS-PER-2008-0040.5
Action: Revise TE-05-001, "Technical Evaluation of Safety-Significant Waste Transfer Isolation Valves for Double Valve Isolation" to include evaluated valves.
Deliverable - Copy of revised TE-05-001.

6) Actionee:Braun, David J
E-STARS Number: WRPS-PER-2008-0040.10
Action: Update the CHAMPS data base for the evaluated valves for the double-shell Tanks Farms, Closure Projects and S Farm.
Deliverable - Electronic or scanned copy of data base changes showing the evaluated valves.

7) Actionee:Goetz, Tom
E-STARS Number: WRPS-PER-2008-0040.11

Action:Complete USQ for safety-significant and evaluated valves.
Deliverable - Copy of approved USQ

Causal Analysis, Apparent Cause and/or Root Cause Analysis

+The causal analysis performed for this event utilized change analysis and event causal factors charting to compile collected data in chronological order, identify inappropriate actions, determine failure modes, and identify/categorize causes.

Root Cause

RC-01 - The Root Cause of this event was that the change made to the DSA used the term "or equivalent" in the performance criteria without recognizing the risk of non-compliance or inadequate compliance if equivalency was not further defined or documented.

Failure Mode Category A4 – Management Problem, B5 – Change Management LTA, CO4 – Risks/consequences associated with change not adequately reviewed/assessed

Documentation reviews and interviews indicated that as the SBA was being drafted, with input from Operations and the various Engineering groups, the wording for isolation valve functional requirements and performance criteria was discussed on numerous occasions. The DA/DL with authority over TFC-ENG-STD-22 wanted to ensure consistency between the standard and the SBA that would prescribe desired requirements for future valve procurements and also allow previously tested valves that were evaluated to meet intended SS criteria (i.e., valves listed in TE-05-001). FCI-70-2/VI was considered the most applicable spec. based on seat leakage test criteria that demonstrated allowed leakage would be limited to inconsequential amounts. FCI-70-2/VI "or equivalent" was requested by the DA/DL to accommodate various valve types and associated test methods. It appears that the DA/DL believed that the wording would allow continued use of valves that had been or would be approved as SS using the CGI process.

Section 4.4.6.4 of the DSA states that qualification of isolation valves for double valve isolation to the performance criteria is performed and the basis documented in accordance with TFC engineering standards and procedures. This appears to indicate that the contractor was responsible for defining equivalency requirements in Tank Farm procedures and/or standards. TFC-ENG-STD-22 did somewhat define equivalency when revision D, which incorporated the ABA, specified "FCI-70-2, Class VI, or with an equivalent method and acceptance criteria for the type and class of valve employed in isolation service as specifically approved by the Engineering Discipline Lead - Mechanical." This wording apparently was interpreted that the DA/DL approval was sufficient, without further documentation of the rationale for what criteria was being used as a basis for determining equivalency. There were no other Tank Farm procedures or standards that ensured the basis for meeting the equivalent DSA performance criteria required documentation.

Other components of the related change processes were analyzed for weaknesses. The SB implementation checklist for DVI considered the need to update TFC-ENG-STD-22, the SEL, and evaluate existing valves. Checklist item #12 verified TFC-ENG-STD-22 was updated, item #16 tracked the update to the SEL (post-implementation), and item #18 was used to verify existing valves were controlled through use of the ATB. The C-103 readiness review also determined that the ATB would ensure DVI valves were SS based on Technical Evaluations prior to the SEL revision. The Technical Evaluations accepted the disposition of the associated GCIs without requiring additional documentation of the basis for equivalency.

This situation, especially when combined with the contributing causal factors discussed in the report, results in a condition where a DSA change was inadequately defined to ensure TSR AC 5.11 was not violated.

Corrective actions have been assigned to address this causal factor to preclude a repeat event or similar event.

Direct Cause:

DC-01 - The Direct Cause of this event was that the basis for accepting seat leakage testing performed in lieu of FCI-70-2-2003 for Class VI valves was not documented on the CGI.

Failure Mode Category - A5 – Communications LTA, B2 – Written Communication Content LTA, CO8 – Incomplete/situation not covered

Change control for the ABA, whether through the implementation checklist, the readiness review, the SEL document and database, or ATB, ultimately led to Technical Evaluations that were dependent on source information from CGI forms. When questions arose regarding documentation of equivalency for SS DVI valves and TSR compliance, the lack of justification or reference equivalency documentation in the CGI led to this event.

The remedial corrective actions completed are deemed sufficient to address the direct cause. Corrective actions to address general weaknesses in establishing and maintaining SS documentation is addressed in WRPS-PER-2008-0279.

Contributing Causes:

The following are conditions that were less than desirable, possibly aggravated the event, or assisted in allowing the event to occur but could not be demonstrated as being capable of preventing the event if the condition was not present at the time of the event. These contributing causes are discussed below.

CC-01 – Evaluation of seat leakage acceptance criteria was primarily focused on leak rate, rather than equally evaluating all the seat leakage testing criteria in FCI-70-2-2003 for Class VI valves.

Failure Mode Category - A3 – Human Performance, B3 – Knowledge Base Error, C01 – Attention was given to wrong issues

In the case of CGI 01919, attention was on documenting results that met a functional requirement (of insignificant leakage) and not on providing justification for the test method and acceptance criteria. As the SBA was developed and implemented, this focus remained on ensuring the previous testing was acceptable from a functional viewpoint instead of ensuring that previously accepted testing was either equivalent in criteria and method to the newly approved Safety Basis (SB) or technical justification of equivalency was formally documented and adequately approved. Similarly, key personnel responsible for drafting the SB amendment (SBA) used the criteria "FCI-70-2-2003, or equivalent" without giving adequate attention to the details (i.e., test methods, medium) or consideration of equivalency to the requirements in FCI-70-2/VI. There appeared to be a common mindset that the performance criteria was qualitative rather than treating it as quantitative. This condition, combined with the absence of a procedural requirement to document the basis for equivalency led to assumptions and approvals which later could not be adequately explained, defended, or understood.

CC-02 – Tank Farms Standard for Piping Jumpers and Valves, TFC-ENG-STD-22 did not include a requirement to document basis for using equivalent or alternative standards or specifications.

Failure Mode Category - A5 – Communications LTA, B2 – Written Communication Content LTA, C08 – Incomplete/situation not covered

TFC-ENG-STD-22 has required that deviations be requested, formally approved and documented either in the standard (Rev. A through C) or in the standard basis document (Rev. C-1 throughD-5); however, because the wording related to FCI-70-2/VI used the term "or equivalent," testing results deemed equivalent were not considered a deviation and not subject to wavier approval and document incorporation. Although general engineering expectations are that engineering documents should include technical reasoning for conclusions and assumptions, the specific requirements in TFC-ENG-STD-22 for documenting waivers contrasts with the wording for meeting FCI-70-2/VI equivalency ("specifically approved by the DA" and later "specifically approved by the DL"). This supports a non-conservative interpretation that only a signature was necessary. Because the SBA included an allowed equivalency to FCI-70-2/VI and stated that qualification of valves to the performance criteria is performed and the basis documented in accordance with TFC engineering standards and procedures, TFC-ENG-STD-22 should have included clear direction to document basis for using equivalent or alternative standards or specifications to FCI-70-2/VI. This condition allowed non-conservative (from a SB requirements standpoint) equivalency to go undocumented, resulting in allowing a transfer that was later evaluated and determined to be a TSR violation.

Corrective actions have been assigned to address this causal factor.

CORRECTIVE ACTIONS

Actionee	Action Due Date	E-STARS Number
Quintana, Michael S	02/17/2009	WRPS-PER-2008-0309.1

Action

CC-02-01 - Revise engineering standard TFC-ENG-STD-22 to require documentation and approval of basis for the use of allowed equivalencies.

Deliverable: Copies of revised TFC-ENG-STD-22.

Corrective Action Attachments

- EM-RP--WRPS-TANKFARM-2008-0001 FINAL.htm
- Link to PER
- Occurrence Report EM-RP--WRPS-TANKFARM-2008-0001
- TFC-ENG-STD-22,_Piping_Jumpers_and_Valves.doc
- WRPS-PER-2008-0309 CLOSURE ROOT CAUSE ANALYSIS REPORT.pdf
- WRPS-PER-2008-0309.1 CLOSURE E-MAIL TFC-ENG-STD-22.msg

Actionee	Action Due Date	E-STARS Number
Nelson, Eric A	05/05/2009	WRPS-PER-2008-0309.2

Action

CC-01-01 - Develop and issue Lessons Learned bulletin for adequately considering quantitative acceptance criteria and methods and provide detailed rationale for equivalency when approving alternative specifications or test results.

Deliverable: Issued Lessons Learned bulletin.
*****
Approved due date extension to 5/5/09. tls 3/13/09

Corrective Action Attachments

- EM-RP--WRPS-TANKFARM-2008-0001 FINAL.htm
- Link to PER

- Occurrence Report EM-RP--WRPS-TANKFARM-2008-0001
- WRPS-PER-2008-0309 CLOSURE ROOT CAUSE ANALYSIS REPORT.pdf
- WRPS-PER-2008-0309.2 CLOSURE IB-09-034 Lack of Demonstrated Equivalency
- WRPS-PER-2009-0309.2 CLOSURE E-MAIL.msg

Actionee	Action Due Date	E-STARS Number
Eppler, Larry L	05/14/2009	WRPS-PER-2008-0309.3

Action

CATPR-01-02 - Change DSA development process to direct that the term "or equivalent" not be used in the DSA for performance criteria for safety-significant SSCs unless the criteria for "equivalent" is provided within the DSA or a reference is provided in the DSA to a document verified to define/control criteria approval.

Deliverable: Revised HNF-2353, "Nuclear Safety and Licensing Desk Instructions or other applicable document.

Corrective Action Attachments

- EM-RP--WRPS-TANKFARM-2008-0001 FINAL.htm
- Link to PER
- Occurrence Report EM-RP--WRPS-TANKFARM-2008-0001
- TFC-ENG-SB-D-10,_Safety_Basis_Format_and_Content.doc
- WRPS-PER-2008-0309 CLOSURE ROOT CAUSE ANALYSIS REPORT.pdf
- WRPS-PER-2008-0309.3 CLOSURE E-MAIL.msg

Actionee	Action Due Date	E-STARS Number
Eppler, Larry L	08/31/2009	WRPS-PER-2008-0309.4

Action

CATPR-01-01 - Submit Safety Basis Amendment to revise double valve isolation testing acceptance criteria to ORP.

Deliverable: Copy of submittal to ORP of the Safety Basis Amendment changes for double valve isolation testing criteria.

Corrective Action Attachments

- EM-RP--WRPS-TANKFARM-2008-0001 FINAL.htm
- Link to PER
- Occurrence Report EM-RP--WRPS-TANKFARM-2008-0001
- WRPS-PER-2008-0309 CLOSURE ROOT CAUSE ANALYSIS REPORT.pdf

Actionee	Action Due Date	E-STARS Number
Eppler, Larry L	08/31/2009	WRPS-PER-2008-0309.5

Action

CATPR-01-03 - Evaluate other uses of standards and equivalency, or similar wording in the DSA and provide recommendation to remedy any associated undefined or vague terms.

Deliverable: Copy of submittal to ORP of the Safety Basis Amendment changes for double valve isolation testing criteria.

Corrective Action Attachments

- EM-RP--WRPS-TANKFARM-2008-0001 FINAL.htm
- Link to PER
- Occurrence Report EM-RP--WRPS-TANKFARM-2008-0001
- WRPS-PER-2008-0309 CLOSURE ROOT CAUSE ANALYSIS REPORT.pdf

Actionee	Action Due Date	E-STARS Number
Quintana, Michael S	09/30/2009	WRPS-PER-2008-0309.6

Action

CC-02-02 - Revise engineering standard TFC-ENG-STD-22, and its technical basis document RPP-RPT-28500, and the Safety Equipment List (SEL) to include approved criteria for safety-significant valves.

Deliverable: Copies of changes made to SEL, revised TFC-ENG-STD-22 and RPP-RPT-28500.

Corrective Action Attachments

- EM-RP--WRPS-TANKFARM-2008-0001 FINAL.htm
- Link to PER
- Occurrence Report EM-RP--WRPS-TANKFARM-2008-0001
- WRPS-PER-2008-0309 CLOSURE ROOT CAUSE ANALYSIS REPORT.pdf

Actionee	Action Due Date	E-STARS Number
Knight, Mark A	12/30/2009	WRPS-PER-2008-0309.7

Action

EPA-01 - Perform an End Point effectiveness assessment to:

- Verify completion of actions.

- Following completion of actions, interview a sample of engineers (from nuclear safety, system engineers, and discipline leads). Ensure 90% minimum understand importance of lessons learned identified in CC-01-01.

- Following approval of Safety Basis Amendment per CATPR-01-01, review a sample of recently completed CGI documentation or Technical Evaluations, as applicable, for compliance to revised process.

Deliverable: Completed End Point Assessment that has been presented to and accepted by the Executive Safety Review Board.

Corrective Action Attachments

- EM-RP--WRPS-TANKFARM-2008-0001 FINAL.htm
- Link to PER
- Occurrence Report EM-RP--WRPS-TANKFARM-2008-0001
- WRPS-PER-2008-0309 CLOSURE ROOT CAUSE ANALYSIS REPORT.pdf

ATTACHMENTS

EM-RP--WRPS-TANKFARM-2008-0001 FINAL.htm

Link to PER

Occurrence Report EM-RP--WRPS-TANKFARM-2008-0001

WRPS-PER-2008-0309 CLOSURE ROOT CAUSE ANALYSIS REPORT.pdf

AUDIT HISTORY

Change Date	Auditor	Comments
12/05/2008 10:00	Owen, Annette	Responsible Manager Task Launched by Owen, Annette
01/28/2009 14:01	Steelman, Tracy L	Change to Cause Analysis screen/Corrective Action plan.
01/28/2009 14:02	Steelman, Tracy L	Change to Cause Analysis screen/Corrective Action plan.
01/28/2009 14:03	Steelman, Tracy L	Change to Cause Analysis screen/Corrective Action plan.
01/28/2009 14:05	Steelman, Tracy L	Corrective actions Launched by Steelman, Tracy L
03/13/2009 09:29	Steelman, Tracy L	Change to Cause Analysis screen/Corrective Action plan.
03/13/2009 09:29	Steelman, Tracy L	Corrective Action item - modification to synchronize with E-STARS.'Action Due Date' was changed. Corrective Action item - modification to synchronize with E-STARS.'Action' was changed.

-- End of Report --
07/08/2009 04:27 PM

Task# WRPS-PER-2008-0309

E-STARS[R] Report
Task Detail Report
07/08/2009 1628

TASK INFORMATION			
Task#	WRPS-PER-2008-0309		
Subject	SIG; TSR Violation for Inadequacy in Valve Testing		
Parent Task#		**Status**	Open
Reference		**Due**	01/05/2010
Originator	^PER Coordinator	**Priority**	Medium
Originator Phone		**Category**	PER
Origination Date	12/02/2008 1615	**Generic1**	None
Remote Task#		**Generic2**	None
Deliverable	PER Review	**Generic3**	None
Class	None	**View Permissions**	Global
Instructions	*No Instructions*		

ROUTING LISTS

1	Corrective actions Routing Lis	Active
	To launch Corrective actions.	
	• ^PER CAs - Assign - Awaiting Response - Due Date - 01/05/2010 0000 *Instructions:*	
2	Responsible Manager	Inactive
	Perform RCA & CAP with End Point Assessment Criteria in accordance with TFC-ESHQ-Q_C-C-01, PER & TFC-ESHQ-Q_ADM-C-11, Root & Common Cause Analysis & Corrective Action Planning. 'Save' Causal tab on PER. Ensure PER is on ESRB agenda.	
	• Knight, Mark A - Assign - Withdrawn - 12/18/2008 0924 *Instructions:*	
	• Knight, Mark A - Assign - Completed with comments - 01/28/2009 1404 *Instructions:* Did you contact the originator about the PER? Document your contact in the response window.	
3	Review Initial PER	Inactive
	Review New PER	
	• ^SO(Strasser, David W) - Review - Concur - 12/03/2008 0939 *Instructions:*	
	• ^PER Screening(Brown, Nancy L) - Review - Concur - 12/03/2008 1509 *Instructions:*	
	• ^Mgr Review(Owen, Annette) - Review - Concur - 12/05/2008 1000 *Instructions:*	

ATTACHMENTS

Attachments	1. EM-RP--WRPS-TANKFARM-2008-0001 FINAL.htm 2. Link to PER 3. Occurrence Report EM-RP--WRPS-TANKFARM-2008-0001 4. WRPS-PER-2008-0309 CLOSURE ROOT CAUSE ANALYSIS REPORT.pdf

COMMENTS

Poster	^PER Coordinator (Steelman, Tracy L) - 12/18/2008 0924

Task# WRPS-PER-2008-0309

Editor	^PER Coordinator (Steelman, Tracy L) - 12/18/2008 0931				
	Approved due date extension to 1/30/09. tls 12/18/08				
	Extension Justification: Additional time is required to complete/finalize root cause analysis due to competing demands for key resources. The extension was approved by F. Beranek, ESRB Sponsor, on 12/17/08. tls 12/18/08				
Poster	Knight, Mark A (Bragg, David A) - 01/28/2009 1404				
	Completed				
	The Root Cause Analysis Report has been reviewed and approved by the ESRB on 01/27/09. Multiple corrective actions will be launched. The originator is aware of the present status of this PER and concurs with the path forward.				
TASK DUE DATE HISTORY					
Modified	01/28/2009 1405 - ^PER Coordinator			**New Due Date**	01/05/2010 0000
Modified	12/18/2008 0921 - ^PER Coordinator (Steelman, Tracy L)			**New Due Date**	01/30/2009 1630
Modified	12/05/2008 1000 - ^PER Coordinator			**New Due Date**	01/01/2009 1630
Modified	12/05/2008 1000 - ^PER Coordinator			**New Due Date**	01/01/2009 1630
Modified	12/02/2008 1615 - ^PER Coordinator			**New Due Date**	12/04/2008 1630
SUB TASK HISTORY					
Subtask#	WRPS-PER-2008-0309.1				
Subject	WRPS-PER-2008-0309; SIG; CC-02-01 - Revise engineering standard TFC-ENG-STD-22 to require documentation and approval of basis for the use of				
Originator	^PER CAs				
	Routing List	*No Active Routing List*			
Subtask#	WRPS-PER-2008-0309.2				
Subject	WRPS-PER-2008-0309; SIG; CC-01-01 - Develop and issue Lessons Learned bulletin for adequately consid				
Originator	^PER CAs				
	Routing List	*No Active Routing List*			
Subtask#	WRPS-PER-2008-0309.3				
Subject	WRPS-PER-2008-0309; SIG; CATPR-01-02 - Change DSA development process to direct that the term "or equivalent" not be used in the DSA				
Originator	^PER CAs				
	Routing List	*No Active Routing List*			
Subtask#	WRPS-PER-2008-0309.4				
Subject	WRPS-PER-2008-0309; SIG; CATPR-01-01 - Submit Safety Basis Amendment to revise double valve isolation testing acceptance criteria to ORP.				
Originator	^PER CAs				
	Routing List	Route List			
		Assignee	Kripps, Larry J	**Response**	
	Routing List	Corrective Action			
		Assignee	Eppler, Larry L	**Response**	

Task# WRPS-PER-2008-0309

		Assignee	Knight, Mark A	**Response**	
Subtask#	WRPS-PER-2008-0309.5				
Subject	WRPS-PER-2008-0309; SIG; CATPR-01-03 - Evaluate other uses of standards and equivalency, or similar wording in the DSA and provide recommend				
Originator	^PER CAs				
	Routing List	Route List			
		Assignee	Kripps, Larry J	**Response**	
	Routing List	Corrective Action			
		Assignee	Eppler, Larry L	**Response**	
		Assignee	Knight, Mark A	**Response**	
Subtask#	WRPS-PER-2008-0309.6				
Subject	WRPS-PER-2008-0309; SIG; CC-02-02 - Revise engineering standard TFC-ENG-STD-22, and its technical basis document RPP-RPT-28500, and the Safety Equipme				
Originator	^PER CAs				
	Routing List	Corrective Action			
		Assignee	Quintana, Michael S	**Response**	
		Assignee	Knight, Mark A	**Response**	
Subtask#	WRPS-PER-2008-0309.7				
Subject	WRPS-PER-2008-0309; SIG; EPA-01 - Perform an End Point effectiveness assessment to: - Verify completion of actions. - Following completion of ac				
Originator	^PER CAs				
	Routing List	Corrective Action			
		Assignee	Knight, Mark A	**Response**	

-- end of report --

EM-RP--WRPS-TANKFARM-2008-0001 FINAL

Occurrence Report

After 2003 Redesign

Tank Farms

(Name of Facility)

Nuclear Waste Operations/Disposal

(Facility Function)

Hanford Site — Washington River Protection Solutions, LLC

(Site) (Contractor)

Name: Knight, Mark A
Title: Manager, Base Operations Engineering **Telephone No.:** (509) 373-1199

(Facility Manager/Designee)

Name: WATERS, SHAUN F
Title: OPERATIONS SPECIALIST **Telephone No.:** (509) 373-3457

(Originator/Transmitter)

Name: **Date:**

(Authorized Classifier (AC))

1. Occurrence Report Number: EM-RP--WRPS-TANKFARM-2008-0001

Testing Of Safety Significant Valves For Double-Valve Isolation Represents A Technical Safety Requirement Violation

2. Report Type and Date: FINAL

	Date	Time
Notification:	10/10/2008	17:56 (ETZ)
Initial Update:	11/21/2008	15:24 (ETZ)
Latest Update:	05/11/2009	12:08 (ETZ)
Final:	05/19/2009	12:42 (ETZ)

3. Significance Category: 2

4. Division or Project: Washington River Protection Solutions, LLC (WRPS)

5. Secretarial Office: EM - Environmental Management

6. System, Bldg., or Equipment: Waste Transfer/Tank Farms/Double Isolation Valves

7. UCNI?: No

8. Plant Area: 200 East/West

9. Date and Time Discovered: 10/09/2008 10:50 (PTZ)

10. Date and Time Categorized: 10/09/2008 11:00 (PTZ)

11. DOE HQ OC Notification:

Date	Time	Person Notified	Organization
NA	NA	NA	NA

12. Other Notifications:

Date	Time	Person Notified	Organization
10/09/2008	11:30 (PTZ)	Blanchard, C. A.	DOE-ORP
10/09/2008	11:30 (PTZ)	Owen, P. L.	WRPS
10/09/2008	11:35 (PTZ)	Ross, W. E.	WRPS
10/09/2008	11:41 (PTZ)	Davis, K. W.	ONC
11/25/2008	15:15 (PTZ)	Williamson, B. I.	DOE-ORP
11/25/2008	15:18 (PTZ)	Badden, J. J.	WRPS
11/25/2008	15:05 (PTZ)	Davis, K. W.	ONC

13. Subject or Title of Occurrence:

Testing Of Safety Significant Valves For Double-Valve Isolation Represents A Technical Safety Requirement Violation

---

14. Reporting Criteria:

3A(2) - Any violation or noncompliance of a Hazard Category 1, 2, or 3 nuclear facility's Technical Safety Requirement (or Operational Safety Requirement) Limiting Control Setting, Limiting Condition for Operation, Administrative Control, or Surveillance Requirement.

Exception: An event consisting solely of a surveillance test performed after the prescribed surveillance period, and in which the equipment was found to be capable of performing its specified safety function. (See separate criterion for late surveillance tests below).

---

15. Description of Occurrence:

Per the Tank Farm Documented Safety Analysis (DSA), safety significant valves used for double-valve isolation are required to meet seat leakage requirements of the Fluid Controls Institute standard FCI 70-2-2003, Control Valve Seat Leakage, for Class VI valves, or equivalent. The test media is air or nitrogen gas at 50-125 degrees Fahrenheit and the test media pressure is the maximum rated differential pressure across the valve plug

or 50 lbs/in2, whichever is less. In 2005, documentation for valves already installed in the field was compiled and evaluated. Documentation was prepared that stated the valves met the criteria of FCI-70-2-2003.

On 10/09/2008, after review of the documentation that was used to classify valves as safety significant, it was determined that the valves were tested with water, not air or nitrogen and at varying pressures. Additionally, documentation discussing the equivalency of the testing performed to that specified in FCI 70-2-2003, as allowed by the DSA, could not be identified. As a result, it was determined this condition represents a potential inadequacy of the documented safety analysis (PISA).

Update 12/01/2008

Re-categorization:
On 11/25/2008 at 1515 hours, Williamson, Brandon I, of the U.S. Department of Energy Office of River Protection (ORP) was notified this occurrence was re-categorized to a 3A(2) SC-2.

Justification:
On 11/25/2008, evaluation of the seat leakage testing performed for safety significant valves used for double-valve isolation showed that the valves were not tested in strict accordance with all the requirements of FCI 70-2-2003, nor was documentation available demonstrating that the testing that was performed was equivalent to that specified in FCI 70-2-2003. Therefore, the seat leakage testing for safety significant isolation valves were not in accordance with the key element of the administrative controls for transfer system configuration management (AC 5.11.2.a.2).

As a result, management determined this issue to be more appropriately classified as a historic Technical Safety Requirement (TSR) violation that dates back to the original implementation of the Tank Farm Safety Basis Amendment-020 for double-valve isolation, which was approved August 5, 2005.

---

16. Is Subcontractor Involved? No

---

17. Operating Conditions of Facility at Time of Occurrence:

Does not apply.

---

18. Activity Category:

03 - Normal Operations (other than Activities specifically listed in this Category)

---

19. Immediate Actions Taken and Results:

An Operations Red Arrow entry was made that reads as follows, "Do not credit Safety Significant Isolation Valves for double-valve isolation during transfers until documentation is in place that demonstrates the valves meet the criteria for Evaluated Waste Transfer or Safety Significant Isolation valves."

No additional actions taken for re-categorization.

---

20. ISM:

4) Perform Work Within Controls

---

21. Cause Code(s):

A4B5C04 - Management Problem; Change Management LTA; Risks / consequences associated with change not adequately reviewed / assessed
A5B2C08 - Communications Less Than Adequate (LTA); Written Communication Content LTA; Incomplete / situation not covered
A3B3C01 - Human Performance Less Than Adequate (LTA); Knowledge Based Error; Attention was given to wrong issues
-->couplet - NA

---

22. Description of Cause:

The causes of this event were determined using Root Cause Analysis utilizing Event and Causal Factor Charting and Change Analysis methodology as defined in the ESHQ Manual, Quality Administration, TFC-ESHQ-Q_ADM-C-11, "Root and Common Cause Analysis and Corrective Action Planning."

The results of the Event and Causal Factor Charting / Change Analysis identified one root cause, one direct cause, and two contributing causes.

BACKGROUND

The valves in question, installed between 1999 and 2005, were successfully leak tested using water or air at various pressures. Then, in late October 2005, a Documented Safety Analysis (DSA) revision introduced controls for double-valve isolation and specified the performance criteria for Class VI valves shall meet the valve seat leakage requirements of the Fluid Controls Institute's standard FCI 70-2-2003, or equivalent. The requirements of this standard specified the test media to be air or nitrogen, at a temperature of 50-125 degrees Fahrenheit, at a pressure that is the maximum rated differential pressure across the valve plug or 50 lbs/in2, whichever is less. Therefore, the leak tests performed on the valves installed between 1999 and 2005 did not fully meet all criteria of FCI 70-2-2003.

An evaluation was performed and the valves were dedicated to safety-significant (SS) using Commercial Grade Item (CGI) upgrade dedication process in support of the new DSA double-valve isolation control. It appeared that the evaluation of the valves focused on the leak rate identified in the DSA and FCI 70-2-2003 and did not discuss equivalency to the other criteria, including acceptable test media, test pressure parameters, and cyclic testing requirements. In addition, the new DSA double-valve isolation controls developed during the preparation of the DSA amendment did not define the term "equivalent" with respect to compliance with FCI 70-2-2003 requirements.

ROOT CAUSE

The root cause of this event was that the change made to the DSA used the term "or equivalent" in the performance criteria without recognizing the risk of non-compliance or inadequate compliance if equivalency was not further defined or documented. (A4B5C04)

Documentation reviews and interviews indicated that as the safety basis (SB) amendment was being drafted, with input from Operations and the various Engineering groups, the wording for isolation valve functional requirements and performance criteria was discussed on numerous occasions. The Design Authority

(DA)/Engineering Discipline Lead - Mechanical (EDL) with authority over Tank Farm's standard for "Piping Jumpers and Valves" (STD-22) wanted to ensure consistency between STD-22 and the SB amendment that would prescribe desired requirements for future valve procurements and also allow previously tested valves that were evaluated to meet intended SS criteria. The FCI 70-2-2003 was considered the most applicable specification based on seat leakage test criteria that demonstrated allowed leakage would be limited to inconsequential amounts. FCI 70-2-2003, "or equivalent," was requested by the DA/EDL to accommodate various valve types and associated test methods. It appears that the DA/EDL believed that the wording would allow continued use of valves that had been or would be approved as SS using the CGI upgrade dedication process.

The DSA states that qualification of isolation valves for double-valve isolation to the performance criteria is performed and the basis documented in accordance with Tank Farm Contractor engineering standards and procedures. This appears to indicate that the contractor was responsible for defining equivalency requirements in Tank Farm procedures and/or standards. STD-22 did somewhat define equivalency when revision D, which incorporated the Authorization Basis (AB) amendment, specified "FCI 70-2-2003, Class VI, or with an equivalent method and acceptance criteria for the type and class of valve employed in isolation service as specifically approved by the Engineering Discipline Lead - Mechanical." This wording apparently was interpreted that the DA/EDL approval was sufficient, without further documentation of the rationale for what criteria was being used as a basis for determining equivalency. There were no other Tank Farm procedures or standards that ensured the basis for meeting the equivalent DSA performance criteria required documentation.

Other components of the related change processes were analyzed for weaknesses. The SB implementation checklist for double-valve isolation (DVI) considered the need to update STD-22, the safety equipment list (SEL), and evaluate existing valves. Checklist item #12 verified STD-22 was updated, item #16 tracked the update to the SEL (post-implementation) and item #18 was used to verify existing valves were controlled through use of the action tracking binder (ATB). The tank 241-C-103 readiness review also determined that the ATB would ensure DVI valves were SS based on Technical Evaluations prior to the SEL revision. The Technical Evaluations accepted the disposition of the associated GCIs without requiring additional documentation of the basis for equivalency.

This situation, especially when combined with the contributing causal factors discussed below, results in a condition where a DSA change was inadequately defined to ensure Technical Safety Requirements (TSR) Transfer Controls Administrative Control was not violated.

Corrective actions 1, 3, 4, 5, 6, 10, 15, and 16 have been assigned to address this causal factor to preclude a repeat event or similar event.

DIRECT CAUSE

The direct cause of this event was that the basis for accepting seat leakage testing performed in lieu of ANSI/FCI 70-2-2003 for Class VI valves was not documented on the Commercial Grade Item form. (A5B2C08)

Change control for the AB amendment, whether through the implementation checklist, the readiness review, the SEL document and database, or ATB, ultimately led to Technical Evaluations that were dependent on source information from CGI forms. When questions arose regarding documentation of equivalency for SS DVI valves and TSR compliance, the lack of justification or reference equivalency documentation in the CGI led to this event.

Corrective actions 6 and 8 through 18 are deemed sufficient to address the direct cause. Corrective actions to address general weaknesses in safety-significant qualification documentation are addressed in occurrence report EM-RP--WRPS-TANKFARM-2008-0002.

CONTRIBUTING CAUSES

The following are conditions that were less than desirable, possibly aggravated the event, or assisted in allowing the event to occur but could not be demonstrated as being capable of preventing the event if the condition was not present at the time of the event. These contributing causes are discussed below.

The first contributing cause was the evaluation of seat leakage acceptance criteria primarily focused on leak rate rather than equally evaluating all the seat leakage testing criteria in ANSI/FCI 70-2-2003 for Class VI valves. (A3B3C01)

In the case of CGI form number 01919, attention was on documenting results that met a functional requirement (of insignificant leakage) and not on providing justification for the test method and acceptance criteria. As the SB amendment was developed and implemented, this focus remained on ensuring the previous testing was acceptable from a functional viewpoint instead of ensuring that previously accepted testing was either equivalent in criteria and method to the newly approved SB or technical justification of equivalency was formally documented and adequately approved. Similarly, key personnel responsible for drafting the SB amendment used the criteria "FCI 70-2-2003, or equivalent" without giving adequate attention to the details (i.e., test methods, medium) or consideration of equivalency to the requirements in FCI 70-2-2003. There appeared to be a common mindset that the performance criterion was qualitative rather than treating it as quantitative. This condition, combined with the absence of a procedural requirement to document the basis for equivalency, led to assumptions and approvals which later could not be adequately explained, defended, or understood.

Corrective actions 2 and 6 have been assigned to address this causal factor.

The second contributing cause was Tank Farm's standard for "Piping Jumpers and Valves" (STD-22) did not include a requirement to document the basis for using equivalent or alternative standards or specifications. (A5B2C08)

STD-22 has required that deviations be requested, formally approved and documented either in the standard (Rev. A through C) or in the standard basis document (Rev. C-1 throughD-5). However, because the wording related to FCI 70-2-2003 used the term "or equivalent," testing results deemed equivalent were not considered a deviation and not subject to wavier approval and document incorporation. Although general engineering expectations are that engineering documents should include technical reasoning for conclusions and assumptions, the specific requirements in STD-22 for documenting waivers contrasts with the wording for meeting FCI 70-2-2003 equivalency ("specifically approved by the DA" and later "specifically approved by the DL"). This supports a non-conservative interpretation that only a signature was necessary. Because the SB amendment included an allowed equivalency to FCI 70-2-2003 and stated that qualification of valves to the performance criteria is performed and the basis documented in accordance with Tank Farm Contractor engineering standards and procedures, STD-22 should have included clear direction to document basis for using equivalent or alternative standards or specifications to FCI 70-2-2003. This condition allowed non-conservative (from a SB requirements standpoint) equivalency to go undocumented, resulting in allowing a transfer that was later evaluated and determined to be a TSR violation.

Corrective actions 1 and 6 have been assigned to address this causal factor.

---

23. Evaluation (by Facility Manager/Designee):

Although the subject valves installed in 1999 through 2005 were not tested in strict accordance with the Control Valve Seat Leakage standard FCI 70-2-2003 for Class VI valves, there was reasonably assurance they would fulfill the double-valve isolation safety-significant function for waste transfer leak accidents described in the Documented Safety Analysis. This assurance is due to the fact they were successfully leak tested using air or

water and, when used to physically disconnect piping used for waste transfers, would function to decrease the frequency or consequences of a waste transfer leak accident providing adequate protection of the co-located worker, worker, and the public.

---

24. Is Further Evaluation Required?: No

---

25. Corrective Actions
Local Tracking System Name: Problem Evaluation Request

1. Revise engineering standard TFC-ENG-STD-22 to require documentation and approval of basis for the use of allowed equivalencies. Objective Evidence: Copies of revised TFC-ENG-STD-22. Actionee: Quintana, Michael S

Target Completion Date: 02/18/2009	**Tracking ID:** WRPS-PER-2008-0309.1

2. Develop and issue Lessons Learned bulletin for adequately considering quantitative acceptance criteria and methods and provide detailed rationale for equivalency when approving alternative specifications or test results. Objective Evidence: Issued Lessons Learned bulletin. Actionee: Nelson, Eric A

Target Completion Date: 05/12/2009	**Tracking ID:** WRPS-PER-2008-0309.2

3. Change Documented Safety Analysis (DSA) development process to direct that the term "or equivalent" not be used in the DSA for performance criteria for safety-significant structures, systems, and components (SSC) unless the criteria for "equivalent" is provided within the DSA or a reference is provided in the DSA to a document verified to define/control criteria approval. Objective Evidence: Revised Nuclear Safety and Licensing Desk Instructions or other applicable document. Actionee: Eppler, Larry L

Target Completion Date: 05/20/2009	**Tracking ID:** WRPS-PER-2008-0309.3

4. Submit Safety Basis amendment to revise double-valve isolation testing acceptance criteria to the Department of Energy, Office of River Protection (ORP). Objective Evidence: Copy of submittal to ORP of the Safety Basis amendment changes for double-valve isolation testing criteria. Actionee: Eppler, Larry L

Target Completion Date: 09/06/2009	**Tracking ID:** WRPS-PER-2008-0309.4

5. Evaluate other uses of standards and equivalencies, or similar wording in the Documented Safety Analysis, and provide recommendation to remedy any associated undefined or vague terms. Objective Evidence: Copy of the Safety Basis amendment changes for double-valve isolation testing criteria submittal to the Department of Energy, Office of River Protection. Actionee: Eppler, Larry L

Target Completion Date: 09/06/2009	**Tracking ID:** WRPS-PER-2008-0309.5

6. Revise Tank Farm's standard for "Piping Jumpers and Valves" (TFC-ENG-STD-22), its technical basis document (RPP-RPT-28500), and the Safety Equipment List (SEL) to include approved criteria for safety-significant valves. Objective Evidence: Copies of revised TFC-ENG-STD-22 and RPP-RPT-28500, and changes made to the SEL. Actionee: Quintana, Michael S

Target Completion Date: 10/06/2009	**Tracking ID:** WRPS-PER-2008-0309.6 (WRPS-PER-2008-0040.6)

7. Perform an End Point effectiveness assessment to: 1) Verify completion of actions. 2) Following completion of actions, interview a sample of engineers (from nuclear safety, system engineers, and discipline leads), ensure 90% minimum understand importance of lessons learned identified in the Lessons Learned bulletin (corrective action 2/WRPS-PER-2008-0309.2). 3) Following approval of

Safety Basis amendment (corrective action 4/ WRPS-PER-2008-0309.4), review a sample of recently completed Commercial Grade Item documentation or Technical Evaluations, as applicable, for compliance to revised process. Objective Evidence: Completed End Point Assessment that has been presented to and accepted by the Executive Safety Review Board. Actionee: Knight, Mark A

Target Completion Date: 01/01/2010	**Tracking ID:** WRPS-PER-2008-0309.7

8. Submit a Justification for Continued Operation for using existing safety-significant systems during planned activities in light of commercial grade dedication issues. Objective Evidence: Justification for Continued Operation approved by the Department of Energy, Office of River Protection. Actionee: Eppler, Larry L

Target Completion Date: 01/16/2009	**Tracking ID:** WRPS-PER-2008-0040

9. Complete evaluation of all S Farm (241-S-A Valve Pit) valves to be used as waste transfer valves in double-valve isolation in Closure Projects. Objective Evidence: Engineering technical evaluations documenting the acceptance criteria of the valves. Actionee: Erhart, Michael F

Target Completion Date: 11/13/2008	**Tracking ID:** WRPS-PER-2008-0040.1

10. Revise the Safety Equipment List (SEL) with respect to safety-significant and evaluated valves. Objective Evidence: Copy of changes made to SEL. Actionee: Quintana, Michael S

Target Completion Date: 12/05/2008	**Tracking ID:** WRPS-PER-2008-0040.2

11. Complete evaluation of all valves to be used as waste transfer valves in double-valve isolation in the following tank farms and in the cross-site transfer line: 241-AN; 241-AP, 241-AW; 241-AZ; and 241-SY. Objective Evidence: Engineering technical evaluations documenting the acceptance criteria of the valves. Actionee: Blaak, Todd M

Target Completion Date: 11/13/2008	**Tracking ID:** WRPS-PER-2008-0040.3

12. Complete technical evaluation of all valves to be used as waste transfer valves in double-valve isolation for Tank C-110. Objective Evidence: Engineering technical evaluation documenting the acceptance criteria of the C-110 valves. Actionee: Parkman, David B

Target Completion Date: 11/13/2008	**Tracking ID:** WRPS-PER-2008-0040.4

13. Revise "Technical Evaluation of Safety-Significant Waste Transfer Isolation Valves for Double-Valve Isolation" (TE-05-001) to include evaluated valves. Objective Evidence: Copy of revised Technical Evaluation TE-05-001. Actionee: Everett, Brian K

Target Completion Date: 11/13/2008	**Tracking ID:** WRPS-PER-2008-0040.5

14. Revise the technical evaluations for evaluated and safety-significant valves used for double-valve isolation. This includes all valves used for double-valve isolation in AN, AP, AW, AZ, SY, S, and C Farms. Objective Evidence: Copies of the revised technical evaluations. Actionee: Everett, Brian K

Target Completion Date: 11/03/2009	**Tracking ID:** WRPS-PER-2008-0040.7

15. Revise the Safety Equipment List (SEL) with for safety-significant and evaluated valves to specify acceptable leak rate criteria. Objective Evidence: Copy of changes made to SEL. Actionee: Quintana, Michael S

Target Completion Date: 10/14/2009	**Tracking ID:** WRPS-PER-2008-0040.8

16. Submit Safety Basis amendment to revise double-valve isolation testing acceptance criteria to the Department of Energy, Office of River Protection (ORP). Objective Evidence: Copy of the Safety Basis amendment changes for double-valve isolation testing criteria submittal to ORP. Actionee: Eppler, Larry L

Target Completion Date: 09/14/2009	**Tracking ID:** WRPS-PER-2008-0040.9

17. Complete Unreviewed Safety Question evaluation (USQ) for safety-significant and evaluated valves. Objective Evidence: Copy of approved USQ. Actionee: Goetz, Tom

Target Completion Date: 12/05/2008	**Tracking ID:** WRPS-PER-2008-0040.11

---

26. Lessons Learned:

When preparing engineering standards and specification documents the requirements shall be well defined and not left up to the interpretation of the reader. If the term "or equivalent" is used, include additional directions as to what characteristics the equivalence shall meet and how the equivalency shall be documented. If a national recognized standard is referenced, define the sections of the standard that are applicable to the function of the component.

Additionally, when following engineering standards and specification documents, if the term "or equivalent" is used and an equivalency is being relied on to meet a requirement, document the technical rationale for the equivalence, including what characteristics were evaluated, and obtain the appropriate approval. Consider quantitative criteria and test methods as well as qualitative test results when approving alternative specifications or test acceptance.

---

27. Similar Occurrence Report Numbers:

EM-RP--WRPS-TANKFARM-2008-0002

---

28. User-defined Field #1:

29. User-defined Field #2:

Problem Evaluation Request WRPS-PER-2008-0040 and WRPS-PER-2008-0309

---

30. HQ Keyword(s):

01E--Inadequate Conduct of Operations - Operations Procedure Noncompliance
01H--Inadequate Conduct of Operations - Inadequate Safety Analysis/USQs
12A--EH Categories - Authorization Basis
14D--Quality Assurance - Documents and Records Deficiency
14H--Quality Assurance - Inspection and Acceptance Testing Deficiency

---

31. HQ Summary:

On October 9, 2008, after reviewing documentation that was used to classify valves as safety significant, it was determined that the Class VI valves or equivalent were tested with water, not air or nitrogen as required and at varying pressures instead of the maximum rated differential pressure across the valve plug or 50 lbs/in2, whichever is less. Additionally, documentation discussing the equivalency of the testing performed to that specified in FCI 70-2-2003, as allowed by the Document Safety Analysis, could not be identified. As a result, it was determined this condition represents a potential inadequacy of the documented safety analysis.

32. DOE Facility Representative Input:

Ron Ciola reviewed this OR with contractor personnel, reviewed the root cause and correctives actions. He also discussed this OR with the ORP manager who on May 11 concurred in approving it. I am therefore approving this OR on his behalf because he couldn"t get timely access to ORPS to approve it himself.

Entered by: SORENSEN, ROBERT C Date: 05/19/2009

33. DOE Program Manager Input:

34. Approvals:

Approved by: Knight, Mark A, Facility Manager/Designee
Date: 05/11/2009
Telephone No.: (509) 373-1199

Approved by: SORENSEN, ROBERT C, Facility Representative/Designee
Date: 05/19/2009
Telephone No.: (509) 372-3294

EM-RP--WRPS-TANKFARM-2008-0001 UPDATE

Occurrence Report

After 2003 Redesign

Tank Farms

(Name of Facility)

Nuclear Waste Operations/Disposal

(Facility Function)

Hanford Site — Washington River Protection Solutions, LLC

(Site) (Contractor)

Name: Knight, Mark A
Title: Manager, Base Operations Engineering **Telephone No.:** (509) 373-1199

(Facility Manager/Designee)

Name: WATERS, SHAUN F
Title: OPERATIONS SPECIALIST **Telephone No.:** (509) 373-3457

(Originator/Transmitter)

Name: **Date:**

(Authorized Classifier (AC))

1. Occurrence Report Number: EM-RP--WRPS-TANKFARM-2008-0001

Testing Of Safety Significant Valves For Double Valve Isolation Represents A Technical Safety Requirement Violation

2. Report Type and Date: UPDATE

	Date	Time
Notification:	10/10/2008	17:56 (ETZ)
Initial Update:	11/21/2008	15:24 (ETZ)
Latest Update:	12/01/2008	17:28 (ETZ)
Final:		(ETZ)

3. Significance Category: 2

4. Division or Project: Washington River Protection Solutions, LLC (WRPS)

5. Secretarial Office: EM - Environmental Management

6. System, Bldg., or Equipment: Waste Transfer/Tank Farms/Double Isolation Valves

7. UCNI?: No

8. Plant Area: 200 East/West

9. Date and Time Discovered: 10/09/2008 10:50 (PTZ)

10. Date and Time Categorized: 10/09/2008 11:00 (PTZ)

11. DOE HQ OC Notification:

Date	Time	Person Notified	Organization
NA	NA	NA	NA

12. Other Notifications:

Date	Time	Person Notified	Organization
10/09/2008	11:30 (PTZ)	Blanchard, C. A.	DOE-ORP
10/09/2008	11:30 (PTZ)	Owen, P. L.	WRPS
10/09/2008	11:35 (PTZ)	Ross, W. E.	WRPS
10/09/2008	11:41 (PTZ)	Davis, K. W.	ONC
11/25/2008	15:05 (PTZ)	Davis, K. W.	ONC
11/25/2008	15:15 (PTZ)	Williamson, B. I.	DOE-ORP
11/25/2008	15:18 (PTZ)	Badden, J. J.	WRPS

13. Subject or Title of Occurrence:

Testing Of Safety Significant Valves For Double Valve Isolation Represents A Technical Safety Requirement Violation

---

14. Reporting Criteria:

3A(2) - Any violation or noncompliance of a Hazard Category 1, 2, or 3 nuclear facility's Technical Safety Requirement (or Operational Safety Requirement) Limiting Control Setting, Limiting Condition for Operation, Administrative Control, or Surveillance Requirement.

Exception: An event consisting solely of a surveillance test performed after the prescribed surveillance period, and in which the equipment was found to be capable of performing its specified safety function. (See separate criterion for late surveillance tests below).

---

15. Description of Occurrence:

Per the Tank Farm Documented Safety Analysis (DSA), safety significant valves used for double valve isolation are required to meet seat leakage requirements of the Fluid Controls Institute standard FCI 70-2-2003, Control Valve Seat Leakage, for Class VI valves, or equivalent. The test media is air or nitrogen gas at 50-125 degrees Fahrenheit and the test media pressure is the maximum rated differential pressure across the valve plug

or 50 lbs/in2, whichever is less. In 2005, documentation for valves already installed in the field was compiled and evaluated. Documentation was prepared that stated the valves met the criteria of FCI-70-2-2003.

On 10/09/2008, after review of the documentation that was used to classify valves as safety significant, it was determined that the valves were tested with water, not air or nitrogen and at varying pressures. Additionally, documentation discussing the equivalency of the testing performed to that specified in FCI 70-2-2003, as allowed by the DSA, could not be identified. As a result, it was determined this condition represents a potential inadequacy of the documented safety analysis (PISA).

Update 12/01/2008

Re-categorization:
On 11/25/2008 at 1515 hours, Williamson, Brandon I, of the U.S. Department of Energy Office of River Protection (ORP) was notified this occurrence was re-categorized to a 3A(2) SC-2.

Justification:
On 11/25/2008, evaluation of the seat leakage testing performed for safety significant valves used for double valve isolation showed that the valves were not tested in strict accordance with all the requirements of FCI 70-2-2003, nor was documentation available demonstrating that the testing that was performed was equivalent to that specified in FCI 70-2-2003. Therefore, the seat leakage testing for safety significant isolation valves were not in accordance with the key element of the administrative controls for transfer system configuration management (AC 5.11.2.a.2).

As a result, management determined this issue to be more appropriately classified as a historic Technical Safety Requirement (TSR) violation that dates back to the original implementation of the Tank Farm Safety Basis Amendment-020 for double valve isolation, which was approved August 5, 2005.

---

16. Is Subcontractor Involved? No

---

17. Operating Conditions of Facility at Time of Occurrence:

Does not apply.

---

18. Activity Category:

03 - Normal Operations (other than Activities specifically listed in this Category)

---

19. Immediate Actions Taken and Results:

An Operations Red Arrow entry was made that reads as follows, "Do not credit Safety Significant Isolation Valves for double valve isolation during transfers until documentation is in place that demonstrates the valves meet the criteria for Evaluated Waste Transfer or Safety Significant Isolation valves."

No additional actions taken for re-categorization.

---

20. ISM:

---

21. Cause Code(s):

---

22. Description of Cause:

---

23. Evaluation (by Facility Manager/Designee):

UPDATE 12/01/2008

This UPDATE is being submitted to re-categorize this occurrence report from a 3B(2) SC-3 to a 3A(2)SC-2. This update also extends the final report due date to 06/11/2009 as reflected on Problem Evaluation Request WRPS-PER-2008-0040.

Per the Tank Farm Documented Safety Analysis (DSA), valves that do not meet the testing requirements for safety significant double valve isolation in FCI 70-2-2003 may be credited for double valve isolation.

If valves have been evaluated and found to meet, or are equivalent to, the process piping design and construction requirements found in ASME B31.3, and are otherwise determined to prevent or limit the leakage of waste, the valve can be credited, with compensatory measures, as an isolation valve for double valve isolation.

Evaluated valves with compensatory measures are considered equivalent to safety significant valves for double valve isolation. Compensatory measures, when evaluated waste transfer system valves are used for double valve isolation, consist of an evaluation and, as appropriate, the establishment of requirement by Tank Farms safety management programs to protect facility workers from the small volume of waste that may leak through the closed valves. Review has shown that the valves meet the construction and leakage requirements to be classified as "evaluated" valves for double valve isolation for future transfers.

Technical evaluations have therefore been produced to change the category of valves from "safety significant" valves to "evaluated" waste transfer system valves as allowed by the DSA.

A further UPDATE or FINAL REPORT will be submitted no later than 06/11/2009.

---

24. Is Further Evaluation Required?: Yes

If YES - Before Further Operation? No

By whom? Knight, Mark A

By when?

---

25. Corrective Actions
Local Tracking System Name: Problem Evaluation Request

---

26. Lessons Learned:

27. Similar Occurrence Report Numbers:

28. User-defined Field #1:

29. User-defined Field #2:

Problem Evaluation Request WRPS-PER-2008-0040

30. HQ Keyword(s):

01E--Inadequate Conduct of Operations - Operations Procedure Noncompliance
01H--Inadequate Conduct of Operations - Inadequate Safety Analysis/USQs
12A--EH Categories - Authorization Basis
14D--Quality Assurance - Documents and Records Deficiency
14H--Quality Assurance - Inspection and Acceptance Testing Deficiency

31. HQ Summary:

On October 9, 2008, after reviewing documentation that was used to classify valves as safety significant, it was determined that the Class VI valves or equivalent were tested with water, not air or nitrogen as required and at varying pressures instead of the maximum rated differential pressure across the valve plug or 50 lbs/in2, whichever is less. Additionally, documentation discussing the equivalency of the testing performed to that specified in FCI 70-2-2003, as allowed by the Document Safety Analysis, could not be identified. As a result, it was determined this condition represents a potential inadequacy of the documented safety analysis.

32. DOE Facility Representative Input:

33. DOE Program Manager Input:

washington river protection solutions

ROOT CAUSE ANALYSIS REPORT
WRPS-PER-2008-0309
January 20, 2009

TSR Violation
Safety-Significant Valves Tested With Water, Not Air or Nitrogen, and at Varying Pressures

Team Lead: John Corbett — Date: 1/27/09

Responsible Manager: for MARK Knight W.M. HARTY — Date: 01/27/2009

Mark Knight

ESRB: Bill Johnson — Date: 1/28/9

TABLE OF CONTENTS

Acronym Table 3
1.0 EXECUTIVE SUMMARY 4
Conclusions 4
Corrective Actions 5
2.0 PROBLEM STATEMENT 5
3.0 BACKGROUND 5
4.0 TIME LINE 6
5.0 PROBLEM ANALYSIS 9
6.0 CAUSE STATEMENT 10
6.1 Root Cause 10
6.2 Direct Cause 11
6.3 Contributing Causes 12
6.4 Historical/Precursor Review: 13
6.5 Assessment Program 13
7.0 EXTENT OF CONDITION 14
8.0 GENERIC IMPLICATIONS 15
9.0 SAFETY SIGNIFICANCE 15
10.0 CORRECTIVE ACTIONS 16
10.1 Immediate Actions / Compensatory Measures Taken 16
10.2 Remedial Corrective Actions 16
10.3 Corrective Action Plan 18
11.0 LESSONS LEARNED 20

ATTACHMENTS

Attachment A — Event and Causal Factor Chart

Attachment B — Change Analysis Table

Attachment C — Causal Factor to Corrective Action Cross Walk

Table of Acronyms and Abbreviated Terms

AC	Administrative Control
CGI	Commercial Grade Item upgrade dedication form
DA	Design Authority
DL	Engineering Discipline Lead - Mechanical
DVI	Double Valve Isolation
FCI-70-2/VI	ANSI/FCI-70-2-2003, Control Valve Seat Leakage, for Class VI Valves
SB	Safety Basis
SBA	Safety Basis Amendment
SS	Safety-Significant
STD-22	TFC-ENG-STD-22 Tank Farms Standard for Piping Jumpers and Valves
TSR	Technical Safety Requirement

1.0 EXECUTIVE SUMMARY

Note that this PER, WRPS-PER-2008-0309, is associated with WRPS-PER-2008-0040, which was originally assigned a PER significance level of "PER with Resolution." However, subsequent evaluation of the PER issue resulted in identifying that a TSR violation occurred. Hence, the significance level of the PER was re-classified as "SIG PER." In order to satisfy the significance level requirements, which include the need to perform a root cause analysis, a new PER, WRPS-PER-2008-0309, was generated. The open corrective actions associated with WRPS-PER-2008-0040 have been incorporated into the corrective action plan included in this report.

This report documents the results of an investigation to perform a causal analysis on the circumstances surrounding the reported violation and to provide a corrective action plan.

Conclusions

The overall conclusions determined that the Safety Basis should be changed to avoid the term "or equivalent" unless adequately defined. TFC-ENG-STD-22 will also need to be revised, based on the Safety Basis change. Providing this detail will contribute to more objectivity in complying with the SB.

Causal Analysis

The Root Cause of this event was that the change made to the DSA used the term "or equivalent" in the performance criteria without recognizing the risk of non-compliance or inadequate compliance if equivalency was not further defined or documented.

The Direct Cause of this event was that the basis for accepting seat leakage testing performed in lieu of FCI-70-2-2003 was not documented on the CGI.

One contributing cause was that the evaluation of seat leakage acceptance criteria was primarily focused on leak rate, rather than equally evaluating all the seat leakage testing criteria in FCI-70-2-2003.

Another contributing cause was that the Tank Farms Standard for Piping Jumpers and Valves, TFC-ENG-STD-22 did not include a requirement to document basis for using equivalent or alternative standards or specifications.

Corrective Actions

- Submit Safety Basis Amendment to revise double valve isolation testing acceptance criteria to ORP.
- Change DSA development process to direct that the term "or equivalent" not be used in the DSA for performance criteria for safety-significant SSCs unless the criteria for "equivalent" is provided within the DSA or a reference is provided in the DSA to a document verified to define/control criteria approval.
- Evaluate other uses of standards and equivalency, or similar wording in the DSA and provide recommendation to remedy any associated undefined or vague terms.
- Develop and issue Lessons Learned bulletin for adequately considering quantitative acceptance criteria and methods and provide detailed rationale for equivalency when approving alternative specifications or test results.
- Revise engineering standard TFC-ENG-STD-22 to require documentation and approval of basis for the use of allowed equivalencies.
- Revise engineering standard TFC-ENG-STD-22, and its technical basis document RPP-RPT-28500, and the Safety Equipment List (SEL) to include approved criteria for safety-significant valves.

2.0 PROBLEM STATEMENT

Safety-significant valves used for double valve isolation in waste transfer systems do not meet all requirements of FCI-70-2-2003, "Control Valve Seat Leakage," for Class VI Valves, and documentation can't be found to demonstrate equivalency.

3.0 BACKGROUND

Per the Tank Farms Documented Safety Analysis (DSA), Safety-Significant valves used for double valve isolation are required to meet seat leakage requirements of FCI 70-2-2003, "Control Valve Seat Leakage," for Class VI valves [FCI-70-2/VI], or equivalent. The test media is air or nitrogen gas at 50-125 degrees F and the test media pressure is the maximum rated differential pressure across the valve plug or 50 psi, whichever is less. In 2005, documentation for valves already installed in the field was compiled and evaluated. Documentation was prepared that stated the valves met the equivalent criteria of FCI-70-2/VI.

On 10/09/2008, after review of the documentation that was used to classify valves as Safety-Significant (SS), an issue was raised regarding test documentation identifying that the valves were tested with water, not air or nitrogen, and at varying pressures. Additionally, documentation discussing the equivalency of the testing performed to that specified in FCI 70-2-2003, as allowed by the DSA, could not be identified. As a result, it was initially determined that this condition represents a potential inadequacy of the documented safety analysis (PISA). Subsequent review determined that the issue identified in the PER resulted in a TSR violation.

The subject valves were installed between 1999 and 2005. Leak tests were successfully performed on the valves using water or air at various pressures. Revision 1-L of RPP-13033, released in late October 2005, introduced controls for double-valve isolation and specified FCI-70-2/VI requirements, or equivalent, for the acceptance criteria. The requirements of this standard include the use of air or nitrogen as the test media, at a temperature of 50-125°F and at a pressure that is the maximum rated differential pressure across the valve plug or 50 psi, whichever is less. Hence the original leak tests did not fully meet all criteria of FCI-70-2/VI.

An evaluation was performed and the valves were dedicated to safety-significant using CGI forms in support of the new DSA double valve isolation control. It appeared that the evaluation of the valves focused on the leak rate identified in the DSA and FCI-70-2/VI and did not discuss equivalency to the other criteria, including acceptable test media, test pressure parameters, and cyclic testing requirements. In addition, the new DSA double valve isolation controls developed during the preparation of the DSA amendment did not define the term "equivalent" with respect to compliance with FCI-70-2/VI requirements.

4.0 TIME LINE

The timeline discussion below provides an overview of the key activities or conditions associated with the analysis of the events leading up to the identified TSR violation. The timeline of the event is based on information gathered by the root cause analysis team during the investigative portion of the analysis.

- January 2004 - RPP-19419 (Specification for Waste Retrieval System Valve Box Assembly) Rev 0 is issued. Includes pressure-retaining component testing per ASME B31.3 and specific valve seat testing criteria.

- March 2004 - TFC-ENG-STD-22 Rev A is issued. Includes requirements for isolation valve seat leakage tests per ANSI/FCI-70-2 or ASME B31.3

- June 2004 - TFC-ENG-STD-22 Rev B is issued. Includes requirements for isolation valve seat leakage tests after jumper fabrication per FCI-70-2/VI or equivalent approved by the design authority.

- July 2004 - Seat tests are performed 7/26/04 for valves installed in the Portable Valve Box (POR104) designed for C-103 waste retrieval (ref. CGI 01919, Rev. 0). Tests were conducted per acceptance criteria in RPP-19419 Rev.0 with satisfactory results.

- December 2004 - CH2M HILL directed to classify waste transfer valves that are credited with providing DVI as SS (ref. 04-TED-115).

- December 2004 - CH2M HILL submits an implementation plan for addressing DVI (ref. CH2M-0403367 R1).

- January 2005 - Initiated draft Safety Basis Amendment (SBA) to classify waste transfer valves that are credited with providing DVI as SS and draft internal procedure to evaluate and approve waste transfer valves for DVI for active waste transfer routes.

- January 2005 - TE-05-001 identifies first set of valves as SS for DVI

- January - October 2005 - Pre-transfer meetings held on case-by-case basis to ensure expectations are met for DVI for each transfer route to be used.

- February 2005 - TE-05-002 identifies first set of valves evaluated to require SMPs (installed valves that do not have test documentation to support SS classification but are acceptable for DVI based on existing data and SMP controls).

- April 2005 - RPP-19419 Rev 2 is issued. Includes "latest valve and jumper standards." Includes post-fabrication seat leakage test per FCI-70-2/VI.

- April 2005 - CGI #01919 Rev 0 is issued identifying SS safety classification for 3 POR104 valves to be used for DVI associated with C-Farm retrieval, and documenting that the valve seat leakage test per RPP-19419 Rev 0 (performed 7/26/04) was an acceptable alternative test in lieu of FCI-70-2 test per the design authority.

- May, 2005 - Cycle tests are performed on similar series valve to those installed in POR104. All seat tests passed vendor criteria - zero leakage at 5,000 - 55,000 cycles, 1000 psig hydro test.

- July 2005 - Draft SBA is submitted for ORP approval. Includes isolation valve functional requirements to (1) maintain structural integrity and (2) to limit leakage to an inconsequential volume, and associated performance criteria to (1) meet

ASME B31.3, or equivalent and (2) meet seat leakage requirements of FCI-70-2/VI, or equivalent (ref. CH2M-0403367 R2).

- August 2005 - SBA approved by ORP. No changes to isolation valve functional requirements or associated performance criteria (ref. 05-TED-053).

- August 2005 - SBA implementation initiated (preliminary meeting had been held 7/26/05, followed by formal SB implementation checklist development and review initiated 8/19/05).

- September 2005 - TFC-ENG-STD-22 Rev D is updated to incorporate safety basis changes associated with DVI (document change initiated 9/13, document revision issued and effective 9/29). Includes post-fabrication seat leakage test per FCI-70-2/VI or equivalent approved by the *Engineering Discipline Lead - Mechanical*. Adds specific requirement for cycle testing valve of same design (also per FCI-70-2/VI or equivalent approved by the Engineering Discipline Lead - Mechanical).

- September 2005 - TE-05-026 identifies SS safety classification for 3 POR104 valves to be used for DVI associated with C-103 retrieval. The technical recommendation references seat leak testing and cycle tests performed by the valve manufacturer, and post-fabrication seat leakage tests to the equivalent ANSI/FCI 70-2 leak criteria approved by the design authority. The technical evaluation includes the statement "No Compensatory Measures Required. The waste transfer isolation valves POR-104... are safety significant valves."

- October 2005 - TE-05-002 updated to show current "evaluated valves" (Rev. 3 approved 10/24/05).

- October 2005 - SB Implementation Checklist for DVI completed (rev. 7T300-RRL-05-028). Includes completed pre-implementation checklist item (#18) to establish Action Tracking Binder statement to "Restrict all transfers that take credit for Double Valve Isolation (DVI) until the valves have been approved by TFC-ENG-STD-22 or are listed in Technical Evaluations TE-05-001, TE-05-002, TE-05-026, CGI-03005 or in the Safety Equipment List (RPP-8792)."

- November 2005 - C-103 readiness review completed. Included in Operational Acceptance Checklist item 3.7 (completed 11/4/05): "All SS components associated with the C-103 Sluicing System are addressed in RPP-8792 with the exception of SS valves POR104... Action Tracking Statement ATB-05-011 authorizes transfers prior to these valves being included in RPP-8792 based on Technical Evaluation TE-05-026."

- November 2005 - On 11/06/05 waste transfer was initiated from C-103 to AN-106 using the waste retrieval system which included POR104 valves credited as SS for DVI. This is the first transfer that would be considered a **TSR violation**, based

on the 12/02/08 determination that a lack of established technical equivalence represented a TSR violation.

5.0 PROBLEM ANALYSIS

The causal analysis performed for this event utilized change analysis and event causal factors charting to compile collected data in chronological order, identify inappropriate actions, determine failure modes, and identify/categorize causes. A change analysis table and a causal factor chart, used as tools for the problem analysis, are provided as attachments to this report. The results of the analysis are as follows:

Root Cause

RC-01	The change made to the DSA used the term "or equivalent" in the performance criteria without recognizing the risk of non-compliance or inadequate compliance if equivalency was not further defined or documented.
Discussion	See Section 6.0
Failure Mode Category	A4 – Management Problem, B5 – Change Management LTA, CO4 – Risks/consequences associated with change not adequately reviewed/assessed

Direct Cause

DC-01	The basis for accepting seat leakage testing performed in lieu of FCI-70-2-2003 for Class VI valves was not documented on the CGI.
Discussion	See Section 6.0
Failure Mode Category	A5 – Communications LTA, B2 – Written Communication Content LTA, CO8 – Incomplete/situation not covered

Contributing Causes

CC-01	Evaluation of seat leakage acceptance criteria was primarily focused on leak rate, rather than equally evaluating all the seat leakage testing criteria in FCI-70-2-2003 for Class VI valves.
Discussion	See Section 6.0
Failure Mode Category	A3 – Human Performance, B3 – Knowledge Base Error, C01 – Attention was given to wrong issues

CC-02	Tank Farms Standard for Piping Jumpers and Valves, TFC-ENG-STD-22, did not include a requirement to document basis for using equivalent or alternative standards or specifications.
Discussion	See Section 6.0
Failure Mode Category	A5 – Communications LTA, B2 – Written Communication Content LTA, C08 – Incomplete/situation not covered

The overall conclusions determined that the SB should be changed to avoid the term "or equivalent" unless adequately defined. TFC-ENG-STD-22 will also need to be revised, based on the SB change. Providing this detail will contribute to more objectivity in complying with the SB. No other changes to codes or standards are recommended. The information in the following sections presents a summary of the problem analysis details which support the corrective action plan presented in section 10.

6.0 CAUSE STATEMENT

6.1 Root Cause

The Root Cause of this event was that the change made to the DSA used the term "or equivalent" in the performance criteria without recognizing the risk of non-compliance or inadequate compliance if equivalency was not further defined or documented.

Documentation reviews and interviews indicated that as the SBA was being drafted, with input from Operations and the various Engineering groups, the wording for isolation valve functional requirements and performance criteria was discussed on numerous occasions. The DA/DL with authority over TFC-ENG-STD-22 wanted to ensure consistency between the standard and the SBA that would prescribe desired requirements for future valve procurements and also allow previously tested valves that were evaluated to meet intended SS criteria (i.e., valves listed in TE-05-001). FCI-70-2/VI was considered the most applicable spec. based on seat leakage test criteria that demonstrated allowed leakage would be limited to inconsequential amounts. FCI-70-2/VI "or equivalent" was requested by the DA/DL to accommodate various valve types and associated test methods. It appears that the DA/DL believed that the wording would allow continued use of valves that had been or would be approved as SS using the CGI process.

Section 4.4.6.4 of the DSA states that qualification of isolation valves for double valve isolation to the performance criteria is performed and the basis documented in accordance with TFC engineering standards and procedures. This appears to indicate that the contractor was responsible for defining equivalency requirements

in Tank Farm procedures and/or standards. TFC-ENG-STD-22 did somewhat define equivalency when revision D, which incorporated the ABA, specified "FCI-70-2, Class VI, or with an equivalent method and acceptance criteria for the type and class of valve employed in isolation service as specifically approved by the Engineering Discipline Lead - Mechanical." This wording apparently was interpreted that the DA/DL approval was sufficient, without further documentation of the rationale for what criteria was being used as a basis for determining equivalency. There were no other Tank Farm procedures or standards that ensured the basis for meeting the equivalent DSA performance criteria required documentation.

Other components of the related change processes were analyzed for weaknesses. The SB implementation checklist for DVI considered the need to update TFC-ENG-STD-22, the SEL, and evaluate existing valves. Checklist item #12 verified TFC-ENG-STD-22 was updated, item #16 tracked the update to the SEL (post-implementation), and item #18 was used to verify existing valves were controlled through use of the ATB. The C-103 readiness review also determined that the ATB would ensure DVI valves were SS based on Technical Evaluations prior to the SEL revision. The Technical Evaluations accepted the disposition of the associated GCIs without requiring additional documentation of the basis for equivalency.

This situation, especially when combined with the contributing causal factors discussed in the report, results in a condition where a DSA change was inadequately defined to ensure TSR AC 5.11 was not violated.

Corrective actions listed in section 10 have been assigned to address this causal factor to preclude a repeat event or similar event.

6.2 Direct Cause

The Direct Cause of this event was that the basis for accepting seat leakage testing performed in lieu of FCI-70-2-2003 for Class VI valves was not documented on the CGI.

Change control for the ABA, whether through the implementation checklist, the readiness review, the SEL document and database, or ATB, ultimately led to Technical Evaluations that were dependent on source information from CGI forms. When questions arose regarding documentation of equivalency for SS DVI valves and TSR compliance, the lack of justification or reference equivalency documentation in the CGI led to this event.

The remedial corrective actions completed are deemed sufficient to address the direct cause. Corrective actions to address general weaknesses in establishing and maintaining SS documentation is addressed in WRPS-PER-2008-0279.

6.3 Contributing Causes

The following are conditions that were less than desirable, possibly aggravated the event, or assisted in allowing the event to occur but could not be demonstrated as being capable of preventing the event if the condition was not present at the time of the event. These contributing causes are discussed below.

CC-01 – Evaluation of seat leakage acceptance criteria was primarily focused on leak rate, rather than equally evaluating all the seat leakage testing criteria in FCI-70-2-2003 for Class VI valves.

In the case of CGI 01919, attention was on documenting results that met a functional requirement (of insignificant leakage) and not on providing justification for the test method and acceptance criteria. As the SBA was developed and implemented, this focus remained on ensuring the previous testing was acceptable from a functional viewpoint instead of ensuring that previously accepted testing was either equivalent in criteria and method to the newly approved Safety Basis (SB) or technical justification of equivalency was formally documented and adequately approved. Similarly, key personnel responsible for drafting the SB amendment (SBA) used the criteria "FCI-70-2-2003, or equivalent" without giving adequate attention to the details (i.e., test methods, medium) or consideration of equivalency to the requirements in FCI-70-2/VI. There appeared to be a common mindset that the performance criteria was qualitative rather than treating it as quantitative. This condition, combined with the absence of a procedural requirement to document the basis for equivalency led to assumptions and approvals which later could not be adequately explained, defended, or understood.

CC-02 – Tank Farms Standard for Piping Jumpers and Valves, TFC-ENG-STD-22 did not include a requirement to document basis for using equivalent or alternative standards or specifications.

TFC-ENG-STD-22 has required that deviations be requested, formally approved and documented either in the standard (Rev. A through C) or in the standard basis document (Rev. C-1 throughD-5); however, because the wording related to FCI-70-2/VI used the term "or equivalent," testing results deemed equivalent were not considered a deviation and not subject to wavier approval and document incorporation. Although general engineering expectations are that engineering documents should include technical reasoning for conclusions and assumptions, the specific requirements in TFC-ENG-STD-22 for documenting waivers contrasts with the wording for meeting FCI-70-2/VI equivalency ("specifically approved by the DA" and later "specifically approved by the DL"). This supports a non-conservative interpretation that only a signature was necessary. Because the SBA included an allowed equivalency to FCI-70-2/VI and stated that qualification of valves to the performance criteria is performed and the basis documented in accordance with TFC engineering standards and procedures, TFC-

ENG-STD-22 should have included clear direction to document basis for using equivalent or alternative standards or specifications to FCI-70-2/VI. This condition allowed non-conservative (from a SB requirements standpoint) equivalency to go undocumented, resulting in allowing a transfer that was later evaluated and determined to be a TSR violation.

Corrective actions listed in section 10 have been assigned to address this causal factor.

6.4 Historical/Precursor Review:

A review of past events and documented problems which could be related to or involve test criteria/result equivalency for SS equipment was performed to determine if previous events should have helped identify any latent organizational weaknesses. Based on a search of the PER database for events and conditions from 2001, leading up to the events of 2005, 113 PERs were reviewed for applicability. There were no indications that the same or similar problem had occurred in that timeframe. Based on this review and consistent with criteria in DOE G 231.1-1, the problem was not found to be a recurring event, or the result of specific corrective action failures.

6.5 Assessment Program

A review of Independent and Management Assessments for FY 2004 and 2005 was performed to determine if past assessments had identified any latent weaknesses in the area of test criteria/result equivalency for SS equipment. There were several assessments that addressed nuclear safety implementation, but none of which resulted in any findings or observations that related to specific issues related to this event. Based on this review there were no indications of inadequacies in the contractor assessment program.

After this event there were missed opportunities to identify the TSR problem earlier. During the C-109 Contractor Readiness Assessment, issues were raised regarding the SS valves in POR104, related to leak test methods and that the valves were not tested after modification. The associated PER (CH2M-PER-2008-0955) addressed the modification issues. The response to the testing equivalency question was to reclassify the valves as "evaluated" and revise TE-05-026. The resolution of the PER (including cause analysis and extent of condition review) did not include the equivalency question and therefore did not raise the larger issue of potential TSR violation.

7.0 EXTENT OF CONDITION

The extent of condition involves all valves used for double valve isolation in the Tank Farms. A review of the waste transfer systems was performed to identify those valves. The results of the review are listed below:

AN Farm - A total of 43 valves were identified and are documented in TE-08-069, "Technical Evaluation of the 241-AN Tank Farm "EVALUATED" Waste Transfer Isolation Valves for Double Valve Isolation."

AP Farm - A total of 16 valves were identified and are documented in TE-08-063, "Technical Evaluation of the 241-AP Tank Farm "EVALUATED" Waste Transfer Isolation Valves for Double Valve Isolation."

AP Farm evaluated valves - A total of 30 valves were identified and are documented in TE-05-002, "Technical Evaluation of the 241-AP Tank Farm EVALUATED" Waste Transfer Isolation Valves."

AW Farm - A total of 33 valves were identified and are documented in TE-08-062, "Technical Evaluation of the 241-AW Tank Farm "EVALUATED" Waste Transfer Isolation Valves for Double Valve Isolation."

AZ Farm - A total of 14 valves were identified and are documented in TE-08-061, "Technical Evaluation of the 241-AZ Tank Farm "EVALUATED" Waste Transfer Isolation Valves for Double Valve Isolation."

SY Farm - A total of 71 valves were identified and are documented in draft document TE-08-071, "Technical Evaluation of the 241-SY Tank Farm "EVALUATED" Waste Transfer Isolation Valves for Double Valve Isolation."

241-S-A Valve Pit - A total of 8 valves were identified and are documented in TE-08-064, "Technical Evaluation for Flow-Tek DVI Valves Located in the 241-S-A Valve Pit."

C Farm - A total of 26 valves were identified and are documented in TE-08-065, "Technical Evaluation of C110 "EVALUATED" Waste Transfer Isolation Valves for Double Valve Isolation."

8.0 GENERIC IMPLICATIONS

One generic implication from the review of this event is that there are other places in the SB where the term "or equivalent" is used and may represent a similar weakness. Corrective action CATPR-01-03 will address this concern. Another generic implication is the issue of other potential inadequacies in documentation for all Tank Farm SS SSCs due to weaknesses in the processes used to establish and dedicate SS equipment. An assessment will be performed to analyze this process and establish improvements, including extent of condition surveys and remedial actions for existing impacted equipment (ref WRPS-PER-2008-0279).

9.0 SAFETY SIGNIFICANCE

The subject valves are discussed in Section 4.4.6, "Isolation Valves for Double Valve Isolation." These valves are identified as safety-significant SSCs for the waste transfer leak accident (Section 3.3.2.4.13 of the DSA) when used to physically disconnect piping using double valve isolation. The valve functions to decrease the frequency or consequences of a waste transfer leak accident. Note that an evaluated valve performs the same safety function as a safety-significant isolation valve [prevent, or limit to an inconsequential volume, the misroute of waste through the valves into physically disconnected piping where controls (transfer leak detection systems, waste transfer associated structure covers, backflow prevention systems) are not required to prevent or mitigate waste transfer leak accidents].

The subject valves were installed beginning in 1999 through 2005, and were successfully leak tested using air or water, but used various test pressures and did not have cyclic testing completed in full accordance with FCI-70-2/VI-2003.

There have been no waste transfer leaks from the time the valves were installed to the present as a result of the issue identified in this PER. Additionally, there have been no injuries to tank farms personnel or exposures to tank waste. Mention the JCO?

10.0 CORRECTIVE ACTIONS

10.1 Immediate Actions / Compensatory Measures Taken

- Initially declared a PISA and issued an occurrence report - Group 3B, Documented Safety Analysis Inadequacies, (2) SC3: Declaration of a potential inadequacy of the documented safety analysis (a potential positive USQ), per 10 CFR 830.203(g). The occurrence report was subsequently changed to an SC2 after it was determined that a TSR violation had occurred.

- An Operations Red Arrow entry was made that reads as follows: Do not credit Safety Significant Isolation Valves for double valve isolation during transfers until documentation is in place that demonstrates the valves meet the criteria for Evaluated Waste Transfer or Safety Significant Isolation valves (ref. ATB-08-018).

10.2 Remedial Corrective Actions

- A Justification for Continued Operation (JCO #TF-09-01) was developed and approved for continued operation using existing SS systems during planned activities in light of commercial grade dedication issues.

- The following actions were initiated in WRPS-PER-2008-0040 and have been completed:

Actionee	**E-STARS Number**
Erhart, Michael F	WRPS-PER-2008-0040.1
Action	
Complete evaluation of all S Farm (241-S-A Valve Pit) valves to be used as waste transfer valves in double valve isolation in Closure Projects. Deliverable - Engineering technical evaluations documenting the acceptance criteria of the valves.	
Actionee	**E-STARS Number**
Quintana, Michael S	WRPS-PER-2008-0040.2
Action	
Revise the SEL with respect to safety-significant and evaluated valves. Deliverable – Copy of changes made to SEL.	
	E-STARS Number

Blaak, Todd M	WRPS-PER-2008-0040.3

Action

Complete evaluation of all valves to be used as waste transfer valves in double valve isolation in the following tank farms and in the cross-site transfer line: 241-AN; 241-AP, 241-AW; 241-AZ; and 241-SY.

Deliverable - Engineering technical evaluations documenting the acceptance criteria of the valves.

Actionee	**E-STARS Number**
Parkman, David B	WRPS-PER-2008-0040.4

Action

Complete technical evaluation of all valves to be used as waste transfer valves in double valve isolation for Tank C-110.

Deliverable - Engineering technical evaluation documenting the acceptance criteria of the C-110 valves.

Actionee	**E-STARS Number**
Everett, Brian K	WRPS-PER-2008-0040.5

Action

Revise TE-05-001, "Technical Evaluation of Safety-Significant Waste Transfer Isolation Valves for Double Valve Isolation" to include evaluated valves.

Deliverable - Copy of revised TE-05-001.

Actionee	**E-STARS Number**
Braun, David J	WRPS-PER-2008-0040.10

Action

Update the CHAMPS data base for the evaluated valves for the double-shell Tanks Farms, Closure Projects and S Farm.

Deliverable - Electronic or scanned copy of data base changes showing the evaluated valves.

Actionee	**E-STARS Number**
Goetz, Tom	WRPS-PER-2008-0040.11

Action

Complete USQ for safety-significant and evaluated valves.

Deliverable – Copy of approved USQ

10.3 Corrective Action Plan

CATPR-01-01	Submit Safety Basis Amendment to revise double valve isolation testing acceptance criteria to ORP.
Actionee:	Eppler, Larry L
Due Date:	08/31/2009
Deliverable:	Copy of submittal to ORP of the Safety Basis Amendment changes for double valve isolation testing criteria.

CATPR-01-02	Change DSA development process to direct that the term "or equivalent" not be used in the DSA for performance criteria for safety-significant SSCs unless the criteria for "equivalent" is provided within the DSA or a reference is provided in the DSA to a document verified to define/control criteria approval.
Actionee:	Eppler, Larry L
Due Date:	05/14/2009
Deliverable:	Revised HNF-2353, "Nuclear Safety and Licensing Desk Instructions or other applicable document.

CATPR-01-03	Evaluate other uses of standards and equivalency, or similar wording in the DSA and provide recommendation to remedy any associated undefined or vague terms.
Actionee:	Eppler, Larry L
Due Date:	08/31/2009
Deliverable:	Copy of submittal to ORP of the Safety Basis Amendment changes for double valve isolation testing criteria.

DC-01-01	Corrective Action to address the direct cause is adequately covered by remedial actions.
Actionee:	N/A
Due Date:	N/A
Deliverable:	N/A

CC-01-01	Develop and issue Lessons Learned bulletin for adequately considering quantitative acceptance criteria and methods and provide detailed rationale for equivalency when approving alternative specifications or test results.
Actionee:	Nelson, Eric A
Due Date:	03/10/2009
Deliverable:	Issued Lessons Learned bulletin

CC-02-01	Revise engineering standard TFC-ENG-STD-22 to require documentation and approval of basis for the use of allowed equivalencies.
Actionee:	Quintana, Michael S
Due Date:	02/17/2009
Deliverable:	Copies of revised TFC-ENG-STD-22.

CC-02-02	Revise engineering standard TFC-ENG-STD-22, and its technical basis document RPP-RPT-28500, and the Safety Equipment List (SEL) to include approved criteria for safety-significant valves.
Actionee:	Quintana, Michael S
Due Date:	09/30/2009
Deliverable:	Copies of changes made to SEL, revised TFC-ENG-STD-22 and RPP-RPT-28500.

EPA-01	Perform an End Point effectiveness assessment to: • Verify completion of actions. • Following completion of actions, interview a sample of engineers (from nuclear safety, system engineers, and discipline leads). Ensure 90% minimum understand importance of lessons learned identified in CC-01-01. • Following approval of Safety Basis Amendment per CATPR-01-01, review a sample of recently completed CGI documentation or Technical Evaluations, as applicable, for compliance to revised process.
Actionee:	M. A. Knight
Due Date:	December 30, 2009
Deliverable:	Completed End Point Assessment that has been presented to and accepted by the Executive Safety Review Board.

11.0 LESSONS LEARNED

When preparing engineering standards and specification documents the requirements shall be well defined and not left up to the interpretation of the reader. If the term "or equivalent" is used, include additional directions as to what characteristics the equivalence shall meet and how the equivalency shall be documented. If a national recognized standard is referenced, define the sections of the standard that are applicable to the function of the component.

When following engineering standards and specification documents, if the term "or equivalent" is used and an equivalency is being relied on to meet a requirement, document the technical rationale for the equivalence, including what characteristics were evaluated, and obtain the appropriate approval. Consider quantitative criteria and test methods as well as qualitative test results when approving alternative specifications or test acceptance.

WRPS-PER-2008-0309 ROOT CAUSE ANALYSIS REPORT
Attachment A - Event and Casual Factor Chart

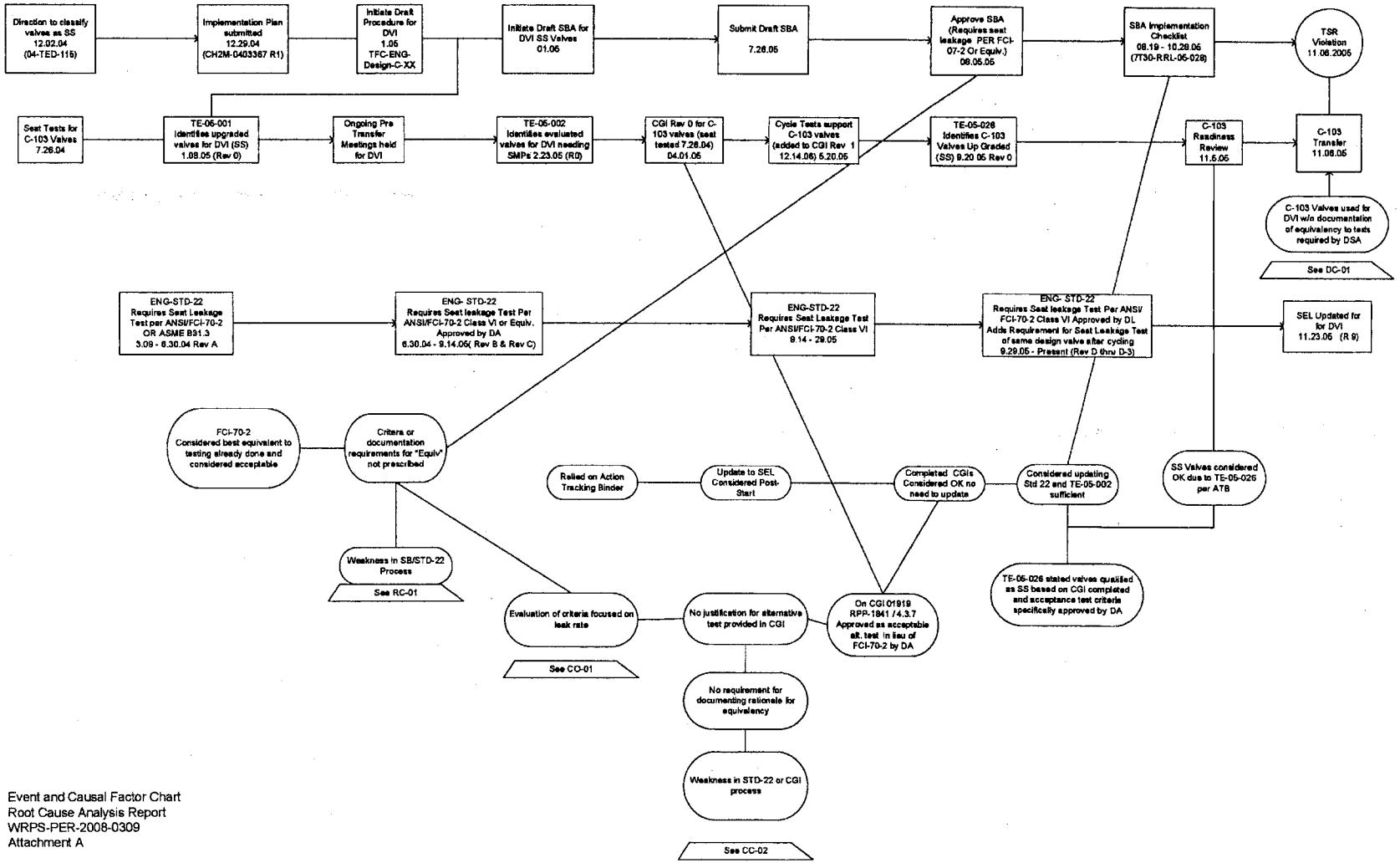

Event and Causal Factor Chart
Root Cause Analysis Report
WRPS-PER-2008-0309
Attachment A

EVENT	WHAT SHOULD HAVE HAPPENED	WHAT DID HAPPEN	DIFFERENCE	ANALYSIS
January 2004 - RPP-19419 (Specification for Waste Retrieval System Valve Box Assembly) Rev 0 is issued.	Procurement spec written to standards required at the time	Includes pressure-retaining component testing per ASME B31.3 and specific valve seat testing criteria.	None	SME and document approval authorities concurred on adequacy of spec
April 2005 - RPP-19419 Rev 2 is issued.		Includes "latest valve and jumper standards." Includes post-fabrication seat leakage test per ANSI/FCI-70-2 Class VI.		Rev 2 meets current requirements of STD22
March 2004 - TFC-ENG-STD-22 Rev A is issued.	Engineering standard written to DOE and industry standards required at the time	Includes requirements for isolation valve seat leakage tests per ANSI/FCI-70-2 or ASME B31.3	None	Std approved by multi-discipline functions
June 2004 - TFC-ENG-STD-22 Rev B is issued.		Includes requirements for isolation valve seat leakage tests after jumper fabrication per ANSI/FCI-70-2 Class VI or equivalent approved by the design authority.		Flexibility needed for various valves. DA is proper approval authority.
September 2005 - TFC-ENG-STD-22 Rev D is updated to incorporate		Includes post-fabrication seat leakage test per	Revision to incorporate SBA does not	Weakness

EVENT	WHAT SHOULD HAVE HAPPENED	WHAT DID HAPPEN	DIFFERENCE	ANALYSIS
safety basis changes associated with DVI		FCI-70-2 Class VI or equivalent approved by the Engineering Discipline Lead - Mechanical. Adds specific requirement for cycle testing valve of same design (also per FCI-70-2 Class VI or equivalent approved by the Engineering Discipline Lead - Mechanical).	specifically define or require basis documentation for equiv	
July 2004 - Seat tests are performed 7/26/04 for valves installed in the Portable Valve Box (POR104) designed for C-103 waste retrieval	Vendor testing per procurement spec in contract	Tests were conducted per acceptance criteria in RPP-19419 Rev.0 with satisfactory results.	None	Industry practice
May, 2005 - Cycle tests are performed on similar series valve to those installed in POR104.	TFC ensure tests meet current STD before use	All seat tests passed vendor criteria - zero leakage at 5,000 - 55,000 cycles, 1000 psig hydro test. Test accepted by DA in lieu of FCI-70-2	No basis documented	No requirement for basis documentation
December 2004 - Decision to classify waste transfer valves that are credited with providing DVI as safety significant	CGI process to include technical reasoning	CGI 1919 - did not include bases for accepting RPP-19419 in lieu of FCI-70-2/VI	No basis documented	Weakness

WRPS-PER-2008-0309 ROOT CAUSE ANALYSIS REPORT

Attachment B - Change Analysis Table

EVENT	WHAT SHOULD HAVE HAPPENED	WHAT DID HAPPEN	DIFFERENCE	ANALYSIS
January - October 2005 - Prior to transfers, evaluate DVI	Communicate with client and document DVI using Technical Evaluations	Pre-transfer meetings held to ensure expectations are meet for DVI for each transfer route to be used. Issued TE-05-001, -002, -026	None	Technical Evaluations used CGIs and other data available at the time
January - August 2005 - Change SB to classify waste transfer valves that are credited with providing DVI as safety significant	SBA with clear defined requirements	SBA approved, included requirement to meet seat leakage requirements of FCI-70-2 Class VI, or equivalent.	SBA does not specifically define or require basis documentation for equiv	Weakness
August - October 2005 - SBA implementation	Multi-disciplined team to develop checklist and complete items identified as pre-implementation.	SB Implementation Checklist for DVI completed	None	Note: impacted by weakness in CGI
November 2005 - C-103 readiness review	Multi-disciplined team to develop checklist and complete items identified as pre-start.	C-103 Operational Acceptance Checklist completed	None	Note: impacted by weakness in CGI
November 2005 - Waste transfer from C-103 to AN-106	Comply with waste transfer controls, including use of SS valves for DVI.	C-103 to AN-106 transfer route using the waste retrieval system which included POR104 valves credited as SS for DVI.	POR104 valves later determined to not meet SS criteria.	Note: impacted by weakness in CGI

Attachment C - Causal Factor to Corrective Action Cross Walk

Cause	Corrective Action	Due Date	End Point Assessment	10 CFR Violation
RC-01	Submit Safety Basis Amendment to revise double valve isolation testing acceptance criteria to ORP.	08/31/2009	**EPA-01**	10 CFR 830.201
RC-01	Change DSA development process to direct that the term "or equivalent" not be used in the DSA for performance criteria for safety-significant SSCs unless the criteria for "equivalent" is provided within the DSA or a reference is provided in the DSA to a document verified to define/control criteria approval.	05/14/2009	**EPA-01**	10 CFR 830.201
RC-01	Evaluate other uses of standards and equivalency, or similar wording in the DSA and provide recommendation to remedy any associated undefined or vague terms.	06/14/2009	**EPA-01**	10 CFR 830.201
DC-01	Corrective Action to address the direct cause is adequately covered by remedial actions.	N/A	N/A	10 CFR 830.122 (c) (3)
CC-01	Develop and issue Lessons Learned bulletin for adequately considering quantitative acceptance criteria and methods and provide detailed rationale for equivalency when approving alternative specifications or test results.	03/10/2009	**EPA-01**	10 CFR 830.201
CC-02	Revise engineering standard TFC-ENG-STD-22 to require documentation and approval of basis for the use of allowed equivalencies.	02/17/2009	**EPA-01**	10 CFR 830.122 (d) (1)
CC-02	Revise engineering standard TFC-ENG-STD-22, and its technical basis document RPP-RPT-28500, and the Safety Equipment List (SEL) to include approved criteria for safety-significant valves.	09/30/2009	**EPA-01**	10 CFR 830.122 (d) (1)

Task# WRPS-PER-2008-0309.1

E-STARS[R] Report
Task Detail Report
07/08/2009 1629

TASK INFORMATION			
Task#	WRPS-PER-2008-0309.1		
Subject	WRPS-PER-2008-0309; SIG; CC-02-01 - Revise engineering standard TFC-ENG-STD-22 to require documentation and approval of basis for the use of		
Parent Task#	WRPS-PER-2008-0309	**Status**	CLOSED 02/18/2009
Reference	WRPS-PER-2008-0309	**Due**	02/23/2009
Originator	^PER CAs	**Priority**	Medium
Originator Phone		**Category**	PER
Origination Date	01/28/2009 1405	**Generic1**	None
Remote Task#		**Generic2**	None
Deliverable	PER Review	**Generic3**	None
Class	None	**View Permissions**	Global
Instructions	*No Instructions*		

ROUTING LISTS		
1	Corrective Action	Inactive
	CC-02-01 - Revise engineering standard TFC-ENG-STD-22 to require documentation and approval of basis for the use of allowed equivalencies. Deliverable: Copies of revised TFC-ENG-STD-22. RESPONSIBLE MANAGER: When this corrective action is complete, enter a closure statement in E-STARS and close the E-STARS subtask. Refer to the Problem Evaluation Request procedure TFC-ESHQ-Q-C-C-01, Section 4.4 for closure documentation requirements	
	• Quintana, Michael S - Assign - Completed with comments - 02/17/2009 1629 *Instructions:*	
	• Knight, Mark A - Review - Concur with comments - 02/17/2009 1815 *Instructions:*	

ATTACHMENTS	
Attachments	1. EM-RP--WRPS-TANKFARM-2008-0001 FINAL.htm 2. Link to PER 3. Occurrence Report EM-RP--WRPS-TANKFARM-2008-0001 4. TFC-ENG-STD-22,_Piping_Jumpers_and_Valves.doc 5. WRPS-PER-2008-0309 CLOSURE ROOT CAUSE ANALYSIS REPORT.pdf 6. WRPS-PER-2008-0309.1 CLOSURE E-MAIL TFC-ENG-STD-22.msg

COMMENTS	
Poster	Quintana, Michael S - 02/17/2009 1629
	Completed
	The actions are completed. Revision D-7 of TFC-ENG-STD-22, Piping Jumpers and Valves, is attached.
Poster	Knight, Mark A (Bragg, David A) - 02/17/2009 1815
	Concur
	TFC-ENG-STD-22 was revised on February 17, 2009 to require documentation and approval of the basis for the use of allowed equivalencies. Section 1.0, "Purpose and Scope," and Section 2.0, "Implementation," of the standard provide the required information for documenting and

Task# WRPS-PER-2008-0309.1

	approving equivalencies for the standard. Note that WRPS-PER-2008-0309 is associated with WRPS-PER-2008-0040, originated by Pete Owen, who requested to be involved with the corrective actions at closure. Hence an e-mail was sent to Pete with a copy of the newly released standard demonstrating the required action has been completed. The e-mail and the newly released standards are attached as objective evidence.		
Poster	^PER CAs (Steelman, Tracy L) - 02/18/2009 0841		
	CLOSED		
	Reviewed and closed. tls 2/18/09		
TASK DUE DATE HISTORY			
Modified	01/28/2009 1405 - ^PER CAs	**New Due Date**	02/23/2009 0000
Modified	01/28/2009 1405 - ^PER CAs	**New Due Date**	01/05/2010 0000
SUB TASK HISTORY			
No Subtasks			

-- end of report --

Ownership matrix

TABLE OF CONTENTS

1.0 PURPOSE AND SCOPE 2
2.0 IMPLEMENTATION 2
3.0 STANDARD 2
3.1 Jumpers 2
3.2 Valves 5
4.0 DEFINITIONS 8
5.0 SOURCES 8
5.1 Requirements 8
5.2 References 8

TABLE OF FIGURES

Figure 1. Waste Transfer Isolation Valve Seat Configurations. 10

1.0 PURPOSE AND SCOPE
(5.1.6)

This standard applies to waste transfer jumper and valve design and installations in secondary containment structures. This standard implements requirements of HNF-SD-WM-TSR-006, "Tank Farms Technical Safety Requirements," Section 5.11, "Transfer Controls" and RPP-13033, "Tank Farms Documented Safety Analysis," Chapter 4, Section 4.4.6, "Isolation Valves for Double Valve Isolation." The technical basis for the requirements in this document and approved deviations can be found in RPP-RPT-28500, "Technical Basis for TFC-ENG-STD-22, Piping Jumpers and Valves." The technical basis for the use of allowed equivalencies in this document can be found in RPP-RPT-28500, "Technical Basis for TFC-ENG-STD-22, Piping Jumpers and Valves."

This standard does not apply to engineered equipment outside of secondary containment structures.

2.0 IMPLEMENTATION

This standard is effective on the date shown in the header.

Deviations to any requirements of this standard shall be requested from the standard owner. Approved deviations shall be documented in the accompanying standard basis document RPP-RPT-28500.

The use of allowed equivalencies in this standard shall be requested from and approved by the standard owner and the Engineering Discipline Lead - Mechanical if different from the standard owner. Approved allowed equivalencies and the basis for their use shall be documented in the accompanying standard basis document, RPP-RPT-28500.

3.0 STANDARD

3.1 Jumpers

3.1.1 General

1. Jumpers and all components included in the jumper shall be designed, fabricated, tested, and inspected to the requirements of ASME B31.3 for normal fluid service, as applicable. (5.1.3, 5.1.5)

2. Jumpers shall be designed to be remotely separable from equipment that intrudes into tank waste to allow removal for maintenance.

3. Jumper design pressure shall be determined from the maximum static head and either the shutoff head of the pump pressure source or the maximum pressure setting of any pressure relieving device provided, and be at least 400 psig. (5.1.3)

4. Jumpers should be designed to allow access for disassembly and/or removal of components (such as valve bodies, valve packing, and flow meters).

5. Jumpers shall use PUREX connectors and nozzles for connections except as required by Section 3.1.4, item 10. (5.1.3)

6. Jumpers shall be fabricated in accordance with RPP-14541, an approved project fabrication specification, or an approved fabrication drawing.

7. Jumper assemblies shall be analyzed for freeze protection requirements. Jumper design temperature shall be suitable for process conditions.

8. Jumper assemblies shall be designed to permit installation using slings or have one or more permanently installed lifting points that are accessible.

9. Lifting points shall be in accordance with drawing H-2-90161 or be designed in accordance with the requirements of RPP-8360. Lifting bails in accordance with drawings H-2-90160, H-2-90162, H-2-90163 may be used where analyzed to be acceptable in accordance with the requirements of RPP-8360.

3.1.2 Rigid Jumpers

1. Jumpers shall be sloped continuously from high point to low point with a minimum slope of 0.25 % wherever connecting nozzle locations and interfaces permit. (5.1.3)

2. Rigid jumpers may include short segments of flexible hose to permit connection alignment or relieve loads on components such as valves and connectors. Where flexible metal hose (see Section 3.1.3) or flexible nonmetallic hose (see Section 3.1.4) is utilized, the need for temporary support of the flexible hose and unsupported end fittings shall be evaluated and the jumper provided with supports, where necessary.

3. Rigid piping, rigid tubing and flexible metal jumpers shall be designed in accordance with the guidance provided in SD-RE-DGS-002. (5.1.3)

3.1.3 Flexible Metal Hose Jumpers

1. Flexible metal hose jumpers shall be the minimum length necessary to accommodate alignment and movement without coiling and with minimized droop. Flexible metal hose jumpers should be supported, where necessary, to permit drainage.

2. Flexible metal hose jumpers shall be identified on drawing H-14-107346. Drawing entries shall include the pit number, nozzle connection locations, Engineering Change Notice for the jumper, jumper identification number, jumper test pressure, and description of connector interfaces.

3.1.4 Flexible Nonmetallic Hose Jumpers

1. Jumpers may be designed, fabricated, and tested using ethylene propylene diene monomer (EPDM) in combination with reinforcement, that is qualified for use in accordance with the test methods specified in ASTM D380, "Standard Test Methods for Rubber Hose," and RMA-IP-2, "Hose Handbook."

2. Hose assemblies shall be designed to the requirements of RMA IP-2.

3. Nonmetallic hose jumpers shall not be used in applications that exceed the service life of the hose.

4. Non-metallic hose reinforcement materials shall be fully encapsulated.

5. Internal surfaces of the hose and fittings shall be compatible with the process fluid chemical and physical properties.

6. Where ignition source control requirements apply, hose material shall meet the requirements of TFC-ENG-STD-13.

7. Minimum burst pressure specified for hose assemblies shall not be less than 4 times the design (maximum working) pressure of the hose assembly.

8. Hose design pressure for vacuum conditions shall be for the maximum vacuum condition of the process, but not less than 6 inches water gage vacuum.

9. Hose assemblies shall be capable of withstanding pressure and temperature cycling between ambient and design conditions without failure.

10. Swaged-on couplings, as defined in RMA IP-2, Chapter 5, shall be used to join hose to fittings.

11. Hose assemblies shall be designed to prevent kinking or abrasion due to hose growth.

12. Changes in direction shall comply with the manufacturer's minimum bend radius requirements. Hose growth shall be evaluated to ensure that the growth can be accommodated by the hose support system without damage to the hose or other equipment in the structure.

13. Hose shall be protected by inclusion of guards to prevent abrasion of the hose, where necessary.

14. Flexible nonmetallic hose jumpers should be supported, where necessary, to permit drainage.

15. Jumper assembly and installation design shall incorporate a means to remove any residual waste or accumulated liquids from the assembly.

16. Methods of installation, operation, and retrieval (including relocation of jumper assemblies and methods for removing accumulated liquids) shall be evaluated to determine mechanical loads which may act on the hose/fitting joints. A means of ensuring the jumper leak-tight integrity shall be provided when subjected to these mechanical loads.

17. Where required, heat tracing shall be of self-limiting design, with maximum temperature not exceeding the maximum temperature permitted for direct contact with the hose material.

18. The exterior surfaces of nonmetallic hose jumper assemblies that are reused shall be visually examined for abrasion or other damage prior to reuse.

19. A pull test shall be performed on short specimens of nonmetallic hose jumper assemblies in accordance with RMA IP-2, Chapter 6, to verify the design can be subjected to the mechanical loads determined for installation, operation, and retrieval

(including removal of residual waste or accumulated liquids) without compromising pressure integrity.

20. Service life and shelf life of hose jumper assemblies shall be evaluated and identified. The date of manufacture, date of first exposure to process conditions, and date of expiration of service life shall be recorded on the assembly drawing that depicts the specified assembly's configuration.

21. Flexible nonmetallic hose jumpers shall be identified on drawing H-14-107346. Drawing entries shall include the pit number, nozzle connection locations, Engineering Change Notice for the jumper, jumper identification number, jumper test pressure, reference assembly drawing, and description of connector interfaces.

3.2 Valves

3.2.1 General

1. Waste transfer valves shall meet the requirements of ASME B31.3. (5.1.3, 5.1.4, 5.1.5)

2. Waste transfer valves shall be either full-ported ball valves, v-ported ball valves, or check valves. In this application, ball valves shall be designed and installed in the stem up position and shall incorporate a resilient seat material. (5.1.3, 5.1.4)

3. Ball valve designs shall be designed for a minimum of 5 degrees of overtravel to ensure port closure when the valve is indicated to be closed by means of visual indication, travel stops, or position indication switches. (5.1.3)

4. Two-way valves shall be designed to close in the clockwise direction. (5.1.3)

5. Valves that are required to be manipulated during a transfer cycle shall be power-operated.

6. Valves shall be designed to provide valve position indication within ±3 degrees of actual valve position that is visible from the top of the cover block. For manually operated valves utilizing a T handle for positioning, this may be satisfied by unique position of the T handle. Remote indication of valve position shall be provided for all motor-operated valves that require manipulation during a transfer cycle. Remote indication of valve position should be provided for all other valves. Process flow indication may be used as a means of positive position indication for power-operated two-way valves after initial valve position is confirmed. Flow control valves using process flow for valve position indication do not require confirmation of valve position prior to restart. (5.1.3)

7. Waste transfer valves shall be located within a jumper assembly.

8. Valves shall include travel stops to restrict further rotation once full open and full closed positions are achieved. (5.1.3) Travel stop positions shall be located at the following positions:

   - Two-way T handle operated valve stops at 0 and 90 degrees.
   - Two-way motor and manual gear operated valve stops at -3 and 93 degrees.
   - Three-way T handle operated valve stops at 0 and 180 degrees.

- Three-way motor and manual gear operated valve stops at -3 and 183 degrees.

3.2.2 Valve Manual Operator Design

1. Manually operated valves to be installed in pits shall be fitted with valve funnels for installation of valve handles. Valve funnel design should be in accordance with drawing H-14-100971 or H-14-100543. (5.1.3)

2. Valve handles for manually operated valve designs should be in accordance with drawing H-14-100972 or H-2-90172.

3.2.3 Valve Testing

1. Valve body shell tests shall be performed for all transfer valves in accordance with ASME B16.34.

2. Manufacturer's seat closure tests should be performed for all transfer valves in accordance with the test methods in API 598 or MSS-SP-72.

3. Seat leakage from each flow port to the isolated port(s) shall be within the limits specified in API 598 or MSS-SP-72 if a seat closure test is performed.

4. Valve travel limit stop settings shall be verified prior to installation of the valve.

3.2.4 Valves for Service Water Pressure Detection Isolation
(5.1.1, 5.1.2.a, 5.1.2.b)

The service water pressure detection isolation valves upstream and downstream of the pressure detector or pressure sensor shall be located as required by HNF-SD-WM-TSR-006.

3.2.5 Waste Transfer Isolation Valves for Double Valve Isolation
(5.1.1, 5.1.2.b, 5.1.4)

1. Two valves in series shall be provided in locations defined in HNF-SD-WM-TSR-006 to physically disconnect piping and components from the planned waste transfer route.

2. Valves shall have valve seats at each position shown in Figure 1.

3. Waste transfer valves that were installed in the waste transfer system prior to April 19, 2004 may be utilized as waste transfer isolation valves provided they contain resilient seats as shown in Figure 1, maintain closure with 5 degrees overtravel, have a positive means of position indication, and meet ASME B31.1 or ASME B31.3 requirements.

4. Manufacturer's seat closure tests shall be performed for all waste transfer isolation valves in accordance with the test methods in API 598 or MSS-SP-72.

   NOTE: Manufacturer's seat leakage tests do not ensure that a valve will satisfy post-fabrication seat leakage test acceptance criteria.

5. Seat leakage from each isolation valve shall be verified after jumper fabrication or valve installation is complete and travel stops and/or closed position indication switches are set. If valve limit stops have been added, replaced, or modified, seat leakage testing shall be completed after installation of valve funnels. Post-fabrication seat leakage tests

shall be as specified in FCI-70-2, Class VI, or with an equivalent method and acceptance criteria for the type and class of valve employed in isolation service as specifically approved by the Engineering Discipline Lead - Mechanical. The seat leakage test duration and any calculations to determine the actual leakage rate shall be included in the test report.

Each isolation valve port that can be pressurized in service shall be tested.

If a three way valve tested with the blocked port vented and the connected ports pressurized shows seat leakage greater than 50% of the FCI-70-2 Class VI criteria, the valve shall also be tested with the blocked port pressurized and connected ports vented unless the blocked port cannot be pressurized in its installed configuration.

6. A valve of the same design shall be tested after the valve has been cycled as specified in FCI-70-2, Class VI, or with an equivalent method and acceptance criteria for the type and class of valve employed in isolation service as specifically approved by the Engineering Discipline Lead - Mechanical. For Waste Feed Delivery applications, the valve shall be cycled a minimum of 500 times prior to the seat leakage test. For Retrieval/Closure applications, the test shall be performed on a valve that has been cycled a minimum number of times that exceeds the number of operating cycles anticipated for the valve in its service application.

7. Valves used for isolation shall have a positive position stop, switch, or other means to ensure accurate positioning for the flow path being isolated. For valves that rely on a position switch for indication of position, loss of power to the switch or any interposing relays shall not result in indication that the valve is in the blocked position.

8. Power actuators for waste transfer isolation valves shall either fail-as-is or fail to the valve blocked position for isolation. For air operated valves, the valve shall fail to the blocked position under a loss of air or loss of electrical power condition.

9. Automated valve control systems (e.g., programmable logic controllers) shall not be used to position waste transfer isolation valves.

10. The results of the valve design review shall be documented in accordance with TFC-ENG-DESIGN-C-15.

11. Valves used for isolation that do not satisfy the testing requirements identified in Section 3.2.5, steps 5 and 6, may be credited as acceptable for evaluated waste transfer isolation valves provided evaluation shows that:

    - The valves were installed prior to January 1, 2005.
    - Valve design records shall be reviewed:
        a. The valves shall have resilient seat material as shown in Figure 1.
        b. The valve shall have a seat design for a minimum of 5 degrees of overtravel.
        c. If available, valve manufacturer's seat leakage testing or installation seat leakage testing shall indicate that seat leakage is limited.
    - Transfer records shall be reviewed:
        a. Valves shall have no indication of significant seat leakage.
        b. Valve shall have less than 500 operating cycles.

c. Valve materials of construction shall be suitable for the chemical and radiological environments experienced.

- Any indication of significant valve seat leakage shall disqualify the valve as an evaluated waste transfer isolation valve for future transfers.
- The evaluation shall be documented in accordance with TFC-ENG-FACSUP-C-02.

12. Evaluated waste transfer isolation valves shall be requalified in accordance with Section 3.2.5, Step 11, at least every five years and if there is a significant change in service conditions (e.g., slurry transfers, low pH). A PM Task with a five year frequency shall be created in CHAMPS for tracking the five year requalification requirement.

4.0 DEFINITIONS

Jumper. A removable/reconfigurable assembly of piping, tubing, hose, and components providing primary containment while installed within a secondary containment structure.

5.0 SOURCES

5.1 Requirements

1. HNF-IP-1266, "Tank Farms Operations Administrative Controls," Section 5.11, "Transfer Controls."

2. HNF-SD-WM-TSR-006, "Tank Farms Technical Safety Requirements."
   a. Section 3.1.2, "Backflow Prevention Systems."
   b. Section 5.11, "Transfer Controls."

3. HNF-4160, "Double-Shell Tank Transfer Valving Subsystem Specification."

4. RPP-13033, "Tank Farms Documented Safety Analysis," Chapter 4, Section 4.4.6, "Isolation Valves for Double Valve Isolation," Washington River Protection Solutions, LLC, Richland, Washington.

5. Title 10, Code of Federal Regulations Part 851, 851.27(b)(7)-(8).

6. DOE O 252.1, "Technical Standards Program."

5.2 References

1. API 598, 1996, "Valve Inspection and Testing," American Petroleum Institute, Washington, District of Columbia.

2. ASME B16.34, "Valves Flanged, Threaded, and Welding End," American Society of Mechanical Engineers, New York, New York.

3. ASME B31.1, "Power Piping," American Society of Mechanical Engineers, New York, New York.

4. ASME B31.3, "Process Piping," American Society of Mechanical Engineers, New York, New York.

5. ASTM D380, "Standard Test Methods for Rubber Hose," American Society for Testing and Materials, International, Conshohocken, Pennsylvania.

6. FCI-70-2, 2003, "Control Valve Seat Leakage," Fluid Controls Institute, Cleveland, Ohio.

7. Hanford Drawings.
   a. H-2-90160, Sheet 1, "Standard Folding Bails."
   b. H-2-90161, Sheet 1, "Standard Rigid Lifting Bails."
   c. H-2-90162, Sheet 1, "Standard Horiz Conn Bails."
   d. H-2-90163, Sheet 1, "Standard Bail Support Assembly."
   e. H-2-90172, all sheets, "Standard Valve Funnel Extension Assembly."
   f. H-14-100543, all sheets, "Valve Handle Assembly, 2 and 3-Way Valves."
   g. H-14-100971, all sheets, "Funnel Assembly 2 and 3-Way Valves."
   h. H-14-100972, all, "Valve Handle Assembly, 2 and 3-Way Valves."
   i. H-14-107346, all sheets, "DST Waste Transfer Piping Diagram."

8. MSS-SP-72, "Ball Valves with Flanged or Butt-Welding Ends for General Service," Manufacturers Standardization Society of the Valves and Fittings Industry, Vienna, Virginia.

9. RMA IP-2, "Hose Handbook," Rubber Manufacturers Association, District of Columbia.

10. RPP-8360, "Lifting Point Evaluation Process."

11. RPP-14541, "Jumper Fabrication and Testing Specification for Tank Farms."

12. SD-RG-DGS-002, 1988, "Jumper Design Standard," Rev. 3, Westinghouse Hanford Company, Richland, Washington.

13. TFC-ENG-DESIGN-C-15, "Commercial Grade Item Upgrade Dedication."

14. TFC-ENG-FACSUP-C-02, "Operability/Technical Evaluations."

15. TFC-ENG-STD-13, "Ignition Source Control Evaluation."

Figure 1. Waste Transfer Isolation Valve Seat Configurations.

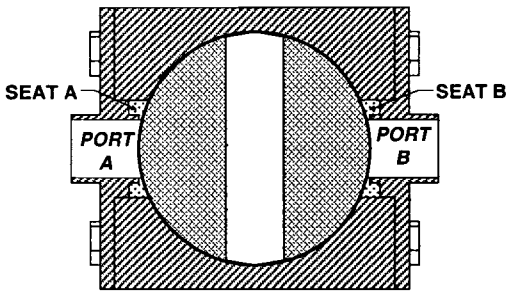

Two Way Valve

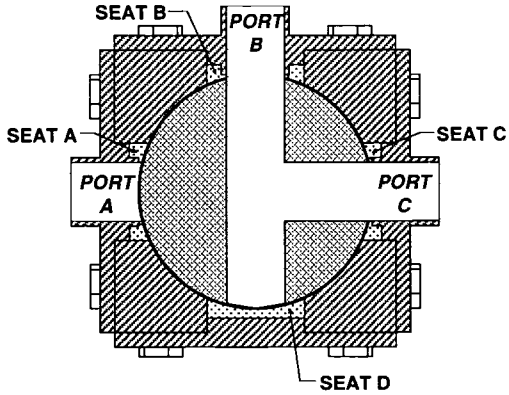

Three Way Valve

Message

From: Bragg, David A

Sent: Tuesday, February 17, 2009 6:01 PM

To: Owen, Peter L

Cc: Quintana, Michael S; Roberts, Mark A; Harty, W M Jr (Mike)

Subject: TFC-ENG-STD-22,_Piping_Jumpers_and_Valves[1].doc

Attachments: TFC-ENG-STD-22,_Piping_Jumpers_and_Valves[1].doc

Pete,

The purpose of this e-mail is to inform you that corrective action WRPS-PER-2008-0209.1 (SIG) will be submitted for closure. This corrective action assigned the following step to Michael Quintana: Revise engineering standard TFC-ENG-STD-22 to require documentation and approval of the basis for the use of allowed equivalencies.

The revised document was released today and is on the procedures drive under the header "Implementing Procedures," "Engineering" sub header, "Engineering Standards." It is attached to this e-mail. Section 1.0, "Purpose and Scope," and Section 2.0, "Implementation," provide the required information for documenting and approving equivalencies for the standard.

Note that the complete "Description of Concern or Problem" for WRPS-PER-2008-0309 is copied below.

Thank you,

David Bragg
Base Operations Maintenance Engineering

Description of Concern or Problem:

Note that this PER is associated with WRPS-PER-2008-0040, which was originally assigned a PER significance level of "PER with Resolution." However, subsequent evaluation of the PER issue has revealed that a TSR violation occurred. Hence, the significance level of the PER should be re-classified as "SIG PER." In order to satisfy the significance level requirements, which include the need to perform a root cause analysis, this new PER was generated. The corrective actions associated with WRPS-PER-2008-0040 will become part of this PER once it has been screened and a root cause analysis is completed. A decision will then be made with respect to what will be done with the original PER (whether it will be cancelled, have its remaining open corrective actions withdrawn, etc., etc.). All applicable fields in this PER are essentially identical to WRPS-PER-2008-0040 with a few necessary exceptions to reflect the aforementioned changes.

Per the Tank Farm Documented Safety Analysis (DSA), Safety Significant valves used for double valve isolation are required to meet seat leakage requirements of FCI 70-2-2003, Control Valve Seat Leakage, for Class VI valves, or equivalent. The test media is air or nitrogen gas at 50-125 degrees F and the test media pressure is the maximum rated differential pressure across the valve plug or 50 lbs/in2, whichever is less. In 2005, documentation for valves already installed in the field was compiled and evaluated. Documentation was prepared that stated the valves met the criteria of FCI-70-2-2003.

On 10/09/2008, after review of the documentation that was used to classify valves as Safety Significant, it was determined that the valves were tested with water, not air or nitrogen and at varying pressures. Additionally, documentation discussing the equivalency of the testing performed to that specified in FCI 70-2-2003, as allowed by the DSA, could not be identified. As a result, it was initially determined that this condition represents a potential inadequacy of the documented safety analysis (PISA). Subsequent review determined that the issue identified in the PER resulted in a TSR violation.

Ownership matrix

TABLE OF CONTENTS

1.0 PURPOSE AND SCOPE 2
2.0 IMPLEMENTATION 2
3.0 STANDARD 2
3.1 Jumpers 2
3.2 Valves 5
4.0 DEFINITIONS 8
5.0 SOURCES 8
5.1 Requirements 8
5.2 References 8

TABLE OF FIGURES

Figure 1. Waste Transfer Isolation Valve Seat Configurations. 10

1.0 PURPOSE AND SCOPE
(5.1.6)

This standard applies to waste transfer jumper and valve design and installations in secondary containment structures. This standard implements requirements of HNF-SD-WM-TSR-006, "Tank Farms Technical Safety Requirements," Section 5.11, "Transfer Controls" and RPP-13033, "Tank Farms Documented Safety Analysis," Chapter 4, Section 4.4.6, "Isolation Valves for Double Valve Isolation." The technical basis for the requirements in this document and approved deviations can be found in RPP-RPT-28500, "Technical Basis for TFC-ENG-STD-22, Piping Jumpers and Valves." The technical basis for the use of allowed equivalencies in this document can be found in RPP-RPT-28500, "Technical Basis for TFC-ENG-STD-22, Piping Jumpers and Valves."

This standard does not apply to engineered equipment outside of secondary containment structures.

2.0 IMPLEMENTATION

This standard is effective on the date shown in the header.

Deviations to any requirements of this standard shall be requested from the standard owner. Approved deviations shall be documented in the accompanying standard basis document RPP-RPT-28500.

The use of allowed equivalencies in this standard shall be requested from and approved by the standard owner and the Engineering Discipline Lead - Mechanical if different from the standard owner. Approved allowed equivalencies and the basis for their use shall be documented in the accompanying standard basis document, RPP-RPT-28500.

3.0 STANDARD

3.1 Jumpers

3.1.1 General

1. Jumpers and all components included in the jumper shall be designed, fabricated, tested, and inspected to the requirements of ASME B31.3 for normal fluid service, as applicable. (5.1.3, 5.1.5)

2. Jumpers shall be designed to be remotely separable from equipment that intrudes into tank waste to allow removal for maintenance.

3. Jumper design pressure shall be determined from the maximum static head and either the shutoff head of the pump pressure source or the maximum pressure setting of any pressure relieving device provided, and be at least 400 psig. (5.1.3)

4. Jumpers should be designed to allow access for disassembly and/or removal of components (such as valve bodies, valve packing, and flow meters).

5. Jumpers shall use PUREX connectors and nozzles for connections except as required by Section 3.1.4, item 10. (5.1.3)

6. Jumpers shall be fabricated in accordance with RPP-14541, an approved project fabrication specification, or an approved fabrication drawing.

7. Jumper assemblies shall be analyzed for freeze protection requirements. Jumper design temperature shall be suitable for process conditions.

8. Jumper assemblies shall be designed to permit installation using slings or have one or more permanently installed lifting points that are accessible.

9. Lifting points shall be in accordance with drawing H-2-90161 or be designed in accordance with the requirements of RPP-8360. Lifting bails in accordance with drawings H-2-90160, H-2-90162, H-2-90163 may be used where analyzed to be acceptable in accordance with the requirements of RPP-8360.

3.1.2 Rigid Jumpers

1. Jumpers shall be sloped continuously from high point to low point with a minimum slope of 0.25 % wherever connecting nozzle locations and interfaces permit. (5.1.3)

2. Rigid jumpers may include short segments of flexible hose to permit connection alignment or relieve loads on components such as valves and connectors. Where flexible metal hose (see Section 3.1.3) or flexible nonmetallic hose (see Section 3.1.4) is utilized, the need for temporary support of the flexible hose and unsupported end fittings shall be evaluated and the jumper provided with supports, where necessary.

3. Rigid piping, rigid tubing and flexible metal jumpers shall be designed in accordance with the guidance provided in SD-RE-DGS-002. (5.1.3)

3.1.3 Flexible Metal Hose Jumpers

1. Flexible metal hose jumpers shall be the minimum length necessary to accommodate alignment and movement without coiling and with minimized droop. Flexible metal hose jumpers should be supported, where necessary, to permit drainage.

2. Flexible metal hose jumpers shall be identified on drawing H-14-107346. Drawing entries shall include the pit number, nozzle connection locations, Engineering Change Notice for the jumper, jumper identification number, jumper test pressure, and description of connector interfaces.

3.1.4 Flexible Nonmetallic Hose Jumpers

1. Jumpers may be designed, fabricated, and tested using ethylene propylene diene monomer (EPDM) in combination with reinforcement, that is qualified for use in accordance with the test methods specified in ASTM D380, "Standard Test Methods for Rubber Hose," and RMA-IP-2, "Hose Handbook."

2. Hose assemblies shall be designed to the requirements of RMA IP-2.

3. Nonmetallic hose jumpers shall not be used in applications that exceed the service life of the hose.

4. Non-metallic hose reinforcement materials shall be fully encapsulated.

5. Internal surfaces of the hose and fittings shall be compatible with the process fluid chemical and physical properties.

6. Where ignition source control requirements apply, hose material shall meet the requirements of TFC-ENG-STD-13.

7. Minimum burst pressure specified for hose assemblies shall not be less than 4 times the design (maximum working) pressure of the hose assembly.

8. Hose design pressure for vacuum conditions shall be for the maximum vacuum condition of the process, but not less than 6 inches water gage vacuum.

9. Hose assemblies shall be capable of withstanding pressure and temperature cycling between ambient and design conditions without failure.

10. Swaged-on couplings, as defined in RMA IP-2, Chapter 5, shall be used to join hose to fittings.

11. Hose assemblies shall be designed to prevent kinking or abrasion due to hose growth.

12. Changes in direction shall comply with the manufacturer's minimum bend radius requirements. Hose growth shall be evaluated to ensure that the growth can be accommodated by the hose support system without damage to the hose or other equipment in the structure.

13. Hose shall be protected by inclusion of guards to prevent abrasion of the hose, where necessary.

14. Flexible nonmetallic hose jumpers should be supported, where necessary, to permit drainage.

15. Jumper assembly and installation design shall incorporate a means to remove any residual waste or accumulated liquids from the assembly.

16. Methods of installation, operation, and retrieval (including relocation of jumper assemblies and methods for removing accumulated liquids) shall be evaluated to determine mechanical loads which may act on the hose/fitting joints. A means of ensuring the jumper leak-tight integrity shall be provided when subjected to these mechanical loads.

17. Where required, heat tracing shall be of self-limiting design, with maximum temperature not exceeding the maximum temperature permitted for direct contact with the hose material.

18. The exterior surfaces of nonmetallic hose jumper assemblies that are reused shall be visually examined for abrasion or other damage prior to reuse.

19. A pull test shall be performed on short specimens of nonmetallic hose jumper assemblies in accordance with RMA IP-2, Chapter 6, to verify the design can be subjected to the mechanical loads determined for installation, operation, and retrieval

(including removal of residual waste or accumulated liquids) without compromising pressure integrity.

20. Service life and shelf life of hose jumper assemblies shall be evaluated and identified. The date of manufacture, date of first exposure to process conditions, and date of expiration of service life shall be recorded on the assembly drawing that depicts the specified assembly's configuration.

21. Flexible nonmetallic hose jumpers shall be identified on drawing H-14-107346. Drawing entries shall include the pit number, nozzle connection locations, Engineering Change Notice for the jumper, jumper identification number, jumper test pressure, reference assembly drawing, and description of connector interfaces.

3.2 Valves

3.2.1 General

1. Waste transfer valves shall meet the requirements of ASME B31.3. (5.1.3, 5.1.4, 5.1.5)

2. Waste transfer valves shall be either full-ported ball valves, v-ported ball valves, or check valves. In this application, ball valves shall be designed and installed in the stem up position and shall incorporate a resilient seat material. (5.1.3, 5.1.4)

3. Ball valve designs shall be designed for a minimum of 5 degrees of overtravel to ensure port closure when the valve is indicated to be closed by means of visual indication, travel stops, or position indication switches. (5.1.3)

4. Two-way valves shall be designed to close in the clockwise direction. (5.1.3)

5. Valves that are required to be manipulated during a transfer cycle shall be power-operated.

6. Valves shall be designed to provide valve position indication within ±3 degrees of actual valve position that is visible from the top of the cover block. For manually operated valves utilizing a T handle for positioning, this may be satisfied by unique position of the T handle. Remote indication of valve position shall be provided for all motor-operated valves that require manipulation during a transfer cycle. Remote indication of valve position should be provided for all other valves. Process flow indication may be used as a means of positive position indication for power-operated two-way valves after initial valve position is confirmed. Flow control valves using process flow for valve position indication do not require confirmation of valve position prior to restart. (5.1.3)

7. Waste transfer valves shall be located within a jumper assembly.

8. Valves shall include travel stops to restrict further rotation once full open and full closed positions are achieved. (5.1.3) Travel stop positions shall be located at the following positions:

   - Two-way T handle operated valve stops at 0 and 90 degrees.
   - Two-way motor and manual gear operated valve stops at -3 and 93 degrees.
   - Three-way T handle operated valve stops at 0 and 180 degrees.

- Three-way motor and manual gear operated valve stops at -3 and 183 degrees.

3.2.2 Valve Manual Operator Design

1. Manually operated valves to be installed in pits shall be fitted with valve funnels for installation of valve handles. Valve funnel design should be in accordance with drawing H-14-100971 or H-14-100543. (5.1.3)

2. Valve handles for manually operated valve designs should be in accordance with drawing H-14-100972 or H-2-90172.

3.2.3 Valve Testing

1. Valve body shell tests shall be performed for all transfer valves in accordance with ASME B16.34.

2. Manufacturer's seat closure tests should be performed for all transfer valves in accordance with the test methods in API 598 or MSS-SP-72.

3. Seat leakage from each flow port to the isolated port(s) shall be within the limits specified in API 598 or MSS-SP-72 if a seat closure test is performed.

4. Valve travel limit stop settings shall be verified prior to installation of the valve.

3.2.4 Valves for Service Water Pressure Detection Isolation
(5.1.1, 5.1.2.a, 5.1.2.b)

The service water pressure detection isolation valves upstream and downstream of the pressure detector or pressure sensor shall be located as required by HNF-SD-WM-TSR-006.

3.2.5 Waste Transfer Isolation Valves for Double Valve Isolation
(5.1.1, 5.1.2.b, 5.1.4)

1. Two valves in series shall be provided in locations defined in HNF-SD-WM-TSR-006 to physically disconnect piping and components from the planned waste transfer route.

2. Valves shall have valve seats at each position shown in Figure 1.

3. Waste transfer valves that were installed in the waste transfer system prior to April 19, 2004 may be utilized as waste transfer isolation valves provided they contain resilient seats as shown in Figure 1, maintain closure with 5 degrees overtravel, have a positive means of position indication, and meet ASME B31.1 or ASME B31.3 requirements.

4. Manufacturer's seat closure tests shall be performed for all waste transfer isolation valves in accordance with the test methods in API 598 or MSS-SP-72.

   NOTE: Manufacturer's seat leakage tests do not ensure that a valve will satisfy post-fabrication seat leakage test acceptance criteria.

5. Seat leakage from each isolation valve shall be verified after jumper fabrication or valve installation is complete and travel stops and/or closed position indication switches are set. If valve limit stops have been added, replaced, or modified, seat leakage testing shall be completed after installation of valve funnels. Post-fabrication seat leakage tests

shall be as specified in FCI-70-2, Class VI, or with an equivalent method and acceptance criteria for the type and class of valve employed in isolation service as specifically approved by the Engineering Discipline Lead - Mechanical. The seat leakage test duration and any calculations to determine the actual leakage rate shall be included in the test report.

Each isolation valve port that can be pressurized in service shall be tested.

If a three way valve tested with the blocked port vented and the connected ports pressurized shows seat leakage greater than 50% of the FCI-70-2 Class VI criteria, the valve shall also be tested with the blocked port pressurized and connected ports vented unless the blocked port cannot be pressurized in its installed configuration.

6. A valve of the same design shall be tested after the valve has been cycled as specified in FCI-70-2, Class VI, or with an equivalent method and acceptance criteria for the type and class of valve employed in isolation service as specifically approved by the Engineering Discipline Lead - Mechanical. For Waste Feed Delivery applications, the valve shall be cycled a minimum of 500 times prior to the seat leakage test. For Retrieval/Closure applications, the test shall be performed on a valve that has been cycled a minimum number of times that exceeds the number of operating cycles anticipated for the valve in its service application.

7. Valves used for isolation shall have a positive position stop, switch, or other means to ensure accurate positioning for the flow path being isolated. For valves that rely on a position switch for indication of position, loss of power to the switch or any interposing relays shall not result in indication that the valve is in the blocked position.

8. Power actuators for waste transfer isolation valves shall either fail-as-is or fail to the valve blocked position for isolation. For air operated valves, the valve shall fail to the blocked position under a loss of air or loss of electrical power condition.

9. Automated valve control systems (e.g., programmable logic controllers) shall not be used to position waste transfer isolation valves.

10. The results of the valve design review shall be documented in accordance with TFC-ENG-DESIGN-C-15.

11. Valves used for isolation that do not satisfy the testing requirements identified in Section 3.2.5, steps 5 and 6, may be credited as acceptable for evaluated waste transfer isolation valves provided evaluation shows that:

    - The valves were installed prior to January 1, 2005.
    - Valve design records shall be reviewed:
        a. The valves shall have resilient seat material as shown in Figure 1.
        b. The valve shall have a seat design for a minimum of 5 degrees of overtravel.
        c. If available, valve manufacturer's seat leakage testing or installation seat leakage testing shall indicate that seat leakage is limited.
    - Transfer records shall be reviewed:
        a. Valves shall have no indication of significant seat leakage.
        b. Valve shall have less than 500 operating cycles.

c. Valve materials of construction shall be suitable for the chemical and radiological environments experienced.

- Any indication of significant valve seat leakage shall disqualify the valve as an evaluated waste transfer isolation valve for future transfers.
- The evaluation shall be documented in accordance with TFC-ENG-FACSUP-C-02.

12. Evaluated waste transfer isolation valves shall be requalified in accordance with Section 3.2.5, Step 11, at least every five years and if there is a significant change in service conditions (e.g., slurry transfers, low pH). A PM Task with a five year frequency shall be created in CHAMPS for tracking the five year requalification requirement.

4.0 DEFINITIONS

Jumper. A removable/reconfigurable assembly of piping, tubing, hose, and components providing primary containment while installed within a secondary containment structure.

5.0 SOURCES

5.1 Requirements

1. HNF-IP-1266, "Tank Farms Operations Administrative Controls," Section 5.11, "Transfer Controls."

2. HNF-SD-WM-TSR-006, "Tank Farms Technical Safety Requirements."
   a. Section 3.1.2, "Backflow Prevention Systems."
   b. Section 5.11, "Transfer Controls."

3. HNF-4160, "Double-Shell Tank Transfer Valving Subsystem Specification."

4. RPP-13033, "Tank Farms Documented Safety Analysis," Chapter 4, Section 4.4.6, "Isolation Valves for Double Valve Isolation," Washington River Protection Solutions, LLC, Richland, Washington.

5. Title 10, Code of Federal Regulations Part 851, 851.27(b)(7)-(8).

6. DOE O 252.1, "Technical Standards Program."

5.2 References

1. API 598, 1996, "Valve Inspection and Testing," American Petroleum Institute, Washington, District of Columbia.

2. ASME B16.34, "Valves Flanged, Threaded, and Welding End," American Society of Mechanical Engineers, New York, New York.

3. ASME B31.1, "Power Piping," American Society of Mechanical Engineers, New York, New York.

4. ASME B31.3, "Process Piping," American Society of Mechanical Engineers, New York, New York.

5. ASTM D380, "Standard Test Methods for Rubber Hose," American Society for Testing and Materials, International, Conshohocken, Pennsylvania.

6. FCI-70-2, 2003, "Control Valve Seat Leakage," Fluid Controls Institute, Cleveland, Ohio.

7. Hanford Drawings.
   a. H-2-90160, Sheet 1, "Standard Folding Bails."
   b. H-2-90161, Sheet 1, "Standard Rigid Lifting Bails."
   c. H-2-90162, Sheet 1, "Standard Horiz Conn Bails."
   d. H-2-90163, Sheet 1, "Standard Bail Support Assembly."
   e. H-2-90172, all sheets, "Standard Valve Funnel Extension Assembly."
   f. H-14-100543, all sheets, "Valve Handle Assembly, 2 and 3-Way Valves."
   g. H-14-100971, all sheets, "Funnel Assembly 2 and 3-Way Valves."
   h. H-14-100972, all, "Valve Handle Assembly, 2 and 3-Way Valves."
   i. H-14-107346, all sheets, "DST Waste Transfer Piping Diagram."

8. MSS-SP-72, "Ball Valves with Flanged or Butt-Welding Ends for General Service," Manufacturers Standardization Society of the Valves and Fittings Industry, Vienna, Virginia.

9. RMA IP-2, "Hose Handbook," Rubber Manufacturers Association, District of Columbia.

10. RPP-8360, "Lifting Point Evaluation Process."

11. RPP-14541, "Jumper Fabrication and Testing Specification for Tank Farms."

12. SD-RG-DGS-002, 1988, "Jumper Design Standard," Rev. 3, Westinghouse Hanford Company, Richland, Washington.

13. TFC-ENG-DESIGN-C-15, "Commercial Grade Item Upgrade Dedication."

14. TFC-ENG-FACSUP-C-02, "Operability/Technical Evaluations."

15. TFC-ENG-STD-13, "Ignition Source Control Evaluation."

Figure 1. Waste Transfer Isolation Valve Seat Configurations.

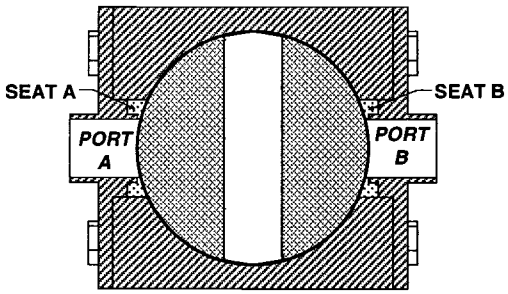

Two Way Valve

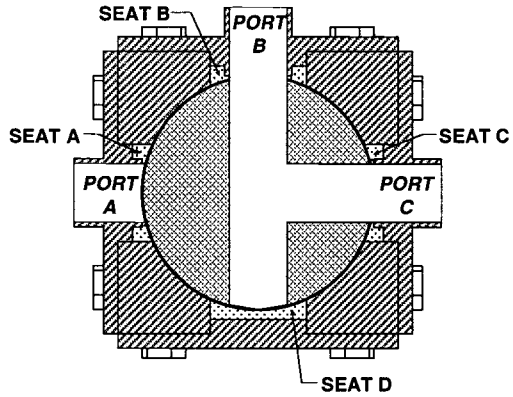

Three Way Valve

Task# WRPS-PER-2008-0309.2

E-STARS[R] Report
Task Detail Report
07/08/2009 1631

TASK INFORMATION			
Task#	WRPS-PER-2008-0309.2		
Subject	WRPS-PER-2008-0309; SIG; CC-01-01 - Develop and issue Lessons Learned bulletin for adequately consid		
Parent Task#	WRPS-PER-2008-0309	**Status**	CLOSED 05/18/2009
Reference	WRPS-PER-2008-0309	**Due**	05/12/2009
Originator	^PER CAs	**Priority**	Medium
Originator Phone		**Category**	PER
Origination Date	01/28/2009 1405	**Generic1**	None
Remote Task#		**Generic2**	None
Deliverable	PER Review	**Generic3**	None
Class	None	**View Permissions**	Global
Instructions	*No Instructions*		

ROUTING LISTS

1	Corrective Action	Inactive
	CC-01-01 - Develop and issue Lessons Learned bulletin for adequately considering quantitative acceptance criteria and methods and provide detailed rationale for equivalency when approving alternative specifications or test results. Deliverable: Issued Lessons Learned bulletin. RESPONSIBLE MANAGER: When this corrective action is complete, enter a closure statement in E-STARS and close the E-STARS subtask. Refer to the Problem Evaluation Request procedure TFC-ESHQ-Q-C-C-01, Section 4.4 for closure documentation requirements	
	• Nelson, Eric A - Assign - Completed with comments - 05/14/2009 1329 *Instructions:*	
	• Knight, Mark A - Review - Concur with comments - 05/14/2009 1851 *Instructions:*	

ATTACHMENTS

Attachments	1. EM-RP--WRPS-TANKFARM-2008-0001 FINAL.htm 2. Link to PER 3. Occurrence Report EM-RP--WRPS-TANKFARM-2008-0001 4. WRPS-PER-2008-0309 CLOSURE ROOT CAUSE ANALYSIS REPORT.pdf 5. WRPS-PER-2008-0309.2 CLOSURE IB-09-034 Lack of Demonstrated Equivalency 6. WRPS-PER-2009-0309.2 CLOSURE E-MAIL.msg

COMMENTS

Poster	^PER Coordinator (Steelman, Tracy L) - 03/13/2009 0929
	Due Date Extension
	Corrective Action item - modification to synchronize with E-STARS.'Action Due Date' was changed. Corrective Action item - modification to synchronize with E-STARS.'Action' was changed.
Poster	^PER CAs (Steelman, Tracy L) - 03/13/2009 1103
	Approved due date extension to 5/5/09. tls 3/13/09
	Extension Justification: Additional time is required due to the need to support higher priority

Task# WRPS-PER-2008-0309.2

	work (Tank Farms JCO and the ISMS). The extension was approved by F. Beranek, ESRB Sponsor, on 3/12/09. tls 3/13/09
Poster	Nelson, Eric A (Littlejohn, Sue M) - 05/14/2009 1329
	Completed
	See attachment WRPS-PER-2008-0309.2 CLOSURE IB-09-034 Lack of Demonstrated Equivalency, for requested lessons learned.
Poster	Knight, Mark A (Bragg, David A) - 05/14/2009 1851
	Concur
	Lessons Learned Bulletin IB-09-034 was released, completing this action. The PER originator was contacted by e-mail on 05/14/09 and provided a copy of the lesons learned bulletin. Attachments are provided as objective evidence.
Poster	^PER CAs (Steelman, Tracy L) - 05/18/2009 1127
	CLOSED
	Reviewed and closed. tls 5/18/09

TASK DUE DATE HISTORY

Modified	03/13/2009 0930 - ^PER Coordinator	**New Due Date**	05/05/2009 0000
Modified	01/28/2009 1405 - ^PER CAs	**New Due Date**	03/16/2009 0000
Modified	01/28/2009 1405 - ^PER CAs	**New Due Date**	01/05/2010 0000

SUB TASK HISTORY

No Subtasks

-- end of report --

Date: May 12, 2009	http://tfc.rl.gov/rapidweb/chg/rppll/	**Number:** IB-09-034

Subject: Lack of Demonstrated Equivalency

Lessons Learned Statement: When accepting satisfactory performance of an item based on an "equivalent" testing method, ensure the alternative method provides results equal to, or superior to, the original method.

Discussion: During the drafting of a Safety Basis Amendment (SBA) concerning acceptable double isolation valve leakage test criteria, the Discipline Lead (DL) with authority over TFC-ENG-STD-22, Piping, Jumpers, and Valves, requested the words "or equivalent" be added to the defined test method (FCI-70-2/VI). The DL wanted to ensure consistency between the standard and the SBA that would prescribe desired requirements for future valve procurements and also allow use of previously tested valves that were evaluated to meet the intended Safety Significant (SS) criteria. The standard chosen (FCI-70-2/VI) was developed for testing control valves that are used for throttling flow and are not designed for positive shutoff (i.e. "no leakage"). The test method uses air or nitrogen at 50 psig with an allowable leakage rate of 6 bubbles/minute. The isolation valves are initially tested at the manufacturer's facility to a different standard (typically API Standard 598) which uses water at 60 to 100 psig with an acceptance criterion of "no visible leakage." After installation into a jumper assembly the valves must be tested again because they are disassembled during the fabrication process so the original manufacturer's seat leakage test is voided, but it was at this point that the FCI testing method was not always used for acceptance of some previously installed valves. The DL believed the wording would allow continued use of valves that had been, or would be, approved as SS using the Commercial Grade Dedication (CGD) process. The CGD process is used to upgrade commercially available items/components that cannot be procured from an ASME NQA-1 qualified source. During the dedication process critical characteristics are verified and/or tested and leakage rate was an established critical characteristic for the isolation valves.

Analysis: The wording change (or equivalent) was added to allow a testing method that limited valve seat leakage to an inconsequential amount. However, no guidance was provided on how to establish and/or qualify the "equivalent" method nor was any alternate leakage rate established.

HPI Error Precursors:

- Human Nature:
  - Limited perspective
  - Complacency/overconfidence
  - Inaccurate risk perception

- Task Demands
    - Lack of or unclear standards

ISMS Expectations:

- E4 – Demonstrate a questioning attitude

Recommendations: When proposing an equivalent testing method, criteria must be established to demonstrate that the alternate method is equal, or superior to, the original method in terms of accuracy, sensitivity, and /or reproducibility. The following steps should be provided when proposing an alternate method.

1. A full description of the method that includes procedural steps, configuration, equipment, materials, and instrumentation to be used. Consider supplying a sketch showing the test.
2. A comparison of the results obtained with the proposed test method to the results from the original test method.
3. 3. An assessment of factors that may interfere with the results of the alternate method or limit its use for testing the component. If necessary provide any "correction factors" that must be applied to results.
4. 4. A description of all quality control measures, e.g. calibrated instruments, to conduct the test necessary to ensure sensitivity, accuracy, and/or repeatability.

References:

1. WRPS-PER-2008-0309
2. 40 CFR 260.21, Petition for Equivalent Testing or Analytical Methods

Originator: Eric A. Nelson, PE, Manager, Central Design Authority & Standards, 372-0216

Keywords: Equivalent Testing Method, Critical Characteristic, Commercial Grade Dedication, Valve Seat Leakage

Distribution: Engineering

Task# WRPS-PER-2008-0309.3

E-STARS[R] Report
Task Detail Report
07/08/2009 1632

TASK INFORMATION			
Task#	WRPS-PER-2008-0309.3		
Subject	WRPS-PER-2008-0309; SIG; CATPR-01-02 - Change DSA development process to direct that the term "or equivalent" not be used in the DSA		
Parent Task#	WRPS-PER-2008-0309	**Status**	CLOSED 05/13/2009
Reference	WRPS-PER-2008-0309	**Due**	05/20/2009
Originator	^PER CAs	**Priority**	Medium
Originator Phone		**Category**	PER
Origination Date	01/28/2009 1405	**Generic1**	None
Remote Task#		**Generic2**	None
Deliverable	PER Review	**Generic3**	None
Class	None	**View Permissions**	Global
Instructions	*No Instructions*		

ROUTING LISTS

1	Corrective Action	Inactive
	CATPR-01-02 - Change DSA development process to direct that the term "or equivalent" not be used in the DSA for performance criteria for safety-significant SSCs unless the criteria for "equivalent" is provided within the DSA or a reference is provided in the DSA to a document verified to define/control criteria approval. Deliverable: Revised HNF-2353, "Nuclear Safety and Licensing Desk Instructions or other applicable document. RESPONSIBLE MANAGER: When this corrective action is complete, enter a closure statement in E-STARS and close the E-STARS subtask. Refer to the Problem Evaluation Request procedure TFC-ESHQ-Q-C-C-01, Section 4.4 for closure documentation requirements	
	• Eppler, Larry L - Assign - Completed with comments - 05/12/2009 0925 *Instructions:*	
	• Knight, Mark A - Review - Concur with comments - 05/13/2009 1004 *Instructions:*	

ATTACHMENTS

Attachments	1. EM-RP--WRPS-TANKFARM-2008-0001 FINAL.htm 2. Link to PER 3. Occurrence Report EM-RP--WRPS-TANKFARM-2008-0001 4. TFC-ENG-SB-D-10,_Safety_Basis_Format_and_Content.doc 5. WRPS-PER-2008-0309 CLOSURE ROOT CAUSE ANALYSIS REPORT.pdf 6. WRPS-PER-2008-0309.3 CLOSURE E-MAIL.msg

COMMENTS

Poster	Eppler, Larry L (Williams, Char) - 05/12/2009 0925
	Completed
	SAFETY BASIS FORMAT AND CONTENT, TFC-ENG-SB-D-10, provides focused guidanced on use of important words and phrases that , if misused, can have serious consequences that include violations of technical safety requirements (TSRs). This Desk Instruction has been attached for closure evidence. No further action required - Close ESTARs action.
Poster	Knight, Mark A (Bragg, David A) - 05/13/2009 1004

Message

From: Bragg, David A

Sent: Thursday, May 14, 2009 6:50 PM

To: Owen, Peter L

Subject: Closure of Corrective Action WRPS-PER-2009-0309.2

Attachments: WRPS-PER-2008-0309.2__CLOSURE_IB-09-034_Lack_of_Demonstrated_Equivalency[2].pdf

Pete,

WRPS-PER-2009-0309 was written based on a PER you originated (WRPS-PER-2008-0040). WRPS-PER-2009-0309 cites the following concern or problem:

Note that this PER is associated with WRPS-PER-2008-0040, which was originally assigned a PER signficance level of "PER with Resolution." However, subsequent evaluation of the PER issue has revealed that a TSR violation occurred. Hence, the sigificance level of the PER should be re-classified as "SIG PER." In order to satisfy the significance level requirements, which include the need to perform a root cause analysis, this new PER was generated. The corrective actions associated with WRPS-PER-2008-0040 will become part of this PER once it has been screened and a root cause analysis is completed. A decision will then be made with respect to what will be done with the original PER (whether it will be cancelled, have its remaining open corrective actions withdrawn, etc., etc.). All applicable fields in this PER are essentially identical to WRPS-PER-2008-0040 with a few neccessary exceptions to reflect the aforementioned changes.

Per the Tank Farm Documented Safety Analysis (DSA), Safety Significant valves used for double valve isolation are required to meet seat leakage requirements of FCI 70-2-2003, Control Valve Seat Leakage, for Class VI valves, or equivalent. The test media is air or nitrogen gas at 50-125 degrees F and the test media pressure is the maximum rated differential pressure across the valve plug or 50 lbs/in2, whichever is less. In 2005, documentation for valves already installed in the field was compiled and evaluated. Documentation was prepared that stated the valves met the criteria of FCI-70-2-2003.

On 10/09/2008, after review of the documentation that was used to classify valves as Safety Significant, it was determined that the valves were tested with water, not air or nitrogen and at varying pressures. Additionally, documentation discussing the equivalency of the testing performed to that specified in FCI 70-2-2003, as allowed by the DSA, could not be identified. As a result, it was initially determined that this condition represents a potential inadequacy of the documented safety analysis (PISA). Subsequent review determined that the issue identified in the PER resulted in a TSR violation.

Corrective Action WRPS-PER-2009-0309.2 required the following:

CC-01-01 - Develop and issue Lessons Learned bulletin for adequately considering quantitative acceptance criteria and methods and provide detailed rationale for equivalency when approving alternative specifications or test results.

Deliverable: Issued Lessons Learned bulletin.

*****

Lessons Learned bulletin IB-09-034 was recently released and is attached above. This corrective action will be submitted for closure.

Thank you,

David Bragg
Base Operations Maintenance Engineering

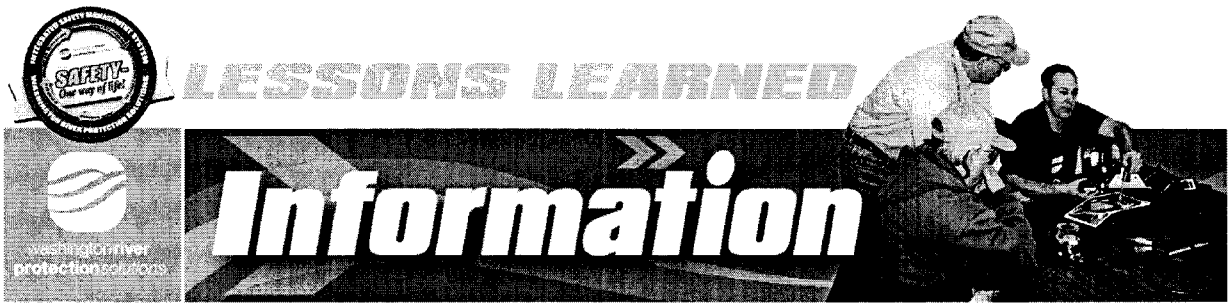

Date: May 12, 2009	http://tfc.rl.gov/rapidweb/chg/rppll/	**Number:** IB-09-034

Subject: Lack of Demonstrated Equivalency

Lessons Learned Statement: When accepting satisfactory performance of an item based on an "equivalent" testing method, ensure the alternative method provides results equal to, or superior to, the original method.

Discussion: During the drafting of a Safety Basis Amendment (SBA) concerning acceptable double isolation valve leakage test criteria, the Discipline Lead (DL) with authority over TFC-ENG-STD-22, Piping, Jumpers, and Valves, requested the words "or equivalent" be added to the defined test method (FCI-70-2/VI). The DL wanted to ensure consistency between the standard and the SBA that would prescribe desired requirements for future valve procurements and also allow use of previously tested valves that were evaluated to meet the intended Safety Significant (SS) criteria. The standard chosen (FCI-70-2/VI) was developed for testing control valves that are used for throttling flow and are not designed for positive shutoff (i.e. "no leakage"). The test method uses air or nitrogen at 50 psig with an allowable leakage rate of 6 bubbles/minute. The isolation valves are initially tested at the manufacturer's facility to a different standard (typically API Standard 598) which uses water at 60 to 100 psig with an acceptance criterion of "no visible leakage." After installation into a jumper assembly the valves must be tested again because they are disassembled during the fabrication process so the original manufacturer's seat leakage test is voided, but it was at this point that the FCI testing method was not always used for acceptance of some previously installed valves. The DL believed the wording would allow continued use of valves that had been, or would be, approved as SS using the Commercial Grade Dedication (CGD) process. The CGD process is used to upgrade commercially available items/components that cannot be procured from an ASME NQA-1 qualified source. During the dedication process critical characteristics are verified and/or tested and leakage rate was an established critical characteristic for the isolation valves.

Analysis: The wording change (or equivalent) was added to allow a testing method that limited valve seat leakage to an inconsequential amount. However, no guidance was provided on how to establish and/or qualify the "equivalent" method nor was any alternate leakage rate established.

HPI Error Precursors:

- Human Nature:
  - Limited perspective
  - Complacency/overconfidence
  - Inaccurate risk perception

- Task Demands
    - Lack of or unclear standards

ISMS Expectations:

- E4 – Demonstrate a questioning attitude

Recommendations: When proposing an equivalent testing method, criteria must be established to demonstrate that the alternate method is equal, or superior to, the original method in terms of accuracy, sensitivity, and /or reproducibility. The following steps should be provided when proposing an alternate method.

1. A full description of the method that includes procedural steps, configuration, equipment, materials, and instrumentation to be used. Consider supplying a sketch showing the test.
2. A comparison of the results obtained with the proposed test method to the results from the original test method.
3. 3. An assessment of factors that may interfere with the results of the alternate method or limit its use for testing the component. If necessary provide any "correction factors" that must be applied to results.
4. 4. A description of all quality control measures, e.g. calibrated instruments, to conduct the test necessary to ensure sensitivity, accuracy, and/or repeatability.

References:

1. WRPS-PER-2008-0309
2. 40 CFR 260.21, Petition for Equivalent Testing or Analytical Methods

Originator: Eric A. Nelson, PE, Manager, Central Design Authority & Standards, 372-0216

Keywords: Equivalent Testing Method, Critical Characteristic, Commercial Grade Dedication, Valve Seat Leakage

Distribution: Engineering

Task# WRPS-PER-2008-0309.3

	Concur		
	Corrective action WRPS-PER-2008-0309.3 has been completed with the release of Desk Instructions TC-ENG-SB-D-10, Rev A (attached as objective evidence). The PER originator was notified of the corrective action disposition by e-mail on 05/13/09. A copy of the e-mail is attached.		
Poster	^PER CAs (Steelman, Tracy L) - 05/13/2009 1021		
	CLOSED		
	The PAAA Coordinator has reviewed and approved to close. tls 5/13/09		
TASK DUE DATE HISTORY			
Modified	01/28/2009 1405 - ^PER CAs	**New Due Date**	05/20/2009 0000
Modified	01/28/2009 1405 - ^PER CAs	**New Due Date**	01/05/2010 0000
SUB TASK HISTORY			
No Subtasks			

-- end of report --

Ownership matrix

1.0 PURPOSE AND SCOPE

This document provides focused guidance on use of important words or phrases that, if misused, can have serious consequences that include violations of technical safety requirements (TSRs). The guidance herein is supplemental to requirements contained in:

- TFC-BSM-AD-STD-02, "Editorial Standards for Technical Documents"
- TFC-ENG-SB-C-01, "Safety Basis Issuance and Maintenance"
- TFC-ENG-SB-C-06, "Safety Basis Development."

This guidance applies to the three documented safety analyses (DSAs) for the tank farms, 242-A Evaporator, and 222-S Laboratories. These documents are: RPP-13033, "Tank Farms Documented Safety Analysis;" HNF-14755, "Documented Safety Analysis for the 242-A Evaporator;" and, HNF-12125, "222-S Laboratory Documented Safety Analysis."

This guidance applies to Washington River Protection Solutions LLC (WRPS) Nuclear Safety personnel and its subcontractors.

2.0 IMPLEMENTATION

This procedure is effective on the date shown in the header.

3.0 RESPONSIBILITIES

Responsibilities are contained within Section 4.0.

4.0 PROCEDURE

Document Author/ Peer Reviewer	1. Do not use the terms "e.g." or "for example" for performance or acceptance criteria, except by agreement with Nuclear Safety Manager.
	2. Do not use the phrase "et cetera" or any of is variants that include "etc." except by agreement with Nuclear Safety Manager.
	3. Do not use the term "or equivalent" for functional requirements or for performance criteria for safety-significant SSCs unless the criteria for "equivalent" is provided within the document.
Nuclear Safety Manager	4. Provide allowed exception(s) to the above proscriptions on a case-by-case basis.

5.0 DEFINITIONS

No terms or phrases unique to this guidance document are used.

6.0 RECORDS

No records are generated during the performance of this guidance document.

7.0 REFERENCES

1. HNF-12125, "222-S Laboratory Documented Safety Analysis."
2. HNF-14755, "Documented Safety Analysis for the 242-A Evaporator."
3. RPP-13033, "Tank Farms Documented Safety Analysis."
4. TFC-BSM-AD-STD-02, "Editorial Standards for Technical Documents."
5. TFC-ENG-SB-C-01, "Safety Basis Issuance and Maintenance."
6. TFC-ENG-SB-C-06, "Safety Basis Development."

Message

From: Bragg, David A
Sent: Wednesday, May 13, 2009 10:01 AM
To: Owen, Peter L
Subject: Closure of Corrective Action WRPS-PER-2008-0309.3
Attachments: WRPS-PER-2008-0309.3 CLOSURE TFC-ENG-SB-D-10.doc

Pete,

You originated WRPS-PER-2008-0309 which documented the following concern:

Note that this PER is associated with WRPS-PER-2008-0040, which was originally assigned a PER signficance level of "PER with Resolution." However, subsequent evaluation of the PER issue has revealed that a TSR violation occurred. Hence, the sigificance level of the PER should be re-classified as "SIG PER." In order to satisfy the significance level requirements, which include the need to perform a root cause analysis, this new PER was generated. The corrective actions associated with WRPS-PER-2008-0040 will become part of this PER once it has been screened and a root cause analysis is completed. A decision will then be made with respect to what will be done with the original PER (whether it will be cancelled, have its remaining open corrective actions withdrawn, etc., etc.). All applicable fields in this PER are essentially identical to WRPS-PER-2008-0040 with a few neccessary exceptions to reflect the aforementioned changes.

Per the Tank Farm Documented Safety Analysis (DSA), Safety Significant valves used for double valve isolation are required to meet seat leakage requirements of FCI 70-2-2003, Control Valve Seat Leakage, for Class VI valves, or equivalent. The test media is air or nitrogen gas at 50-125 degrees F and the test media pressure is the maximum rated differential pressure across the valve plug or 50 lbs/in2, whichever is less. In 2005, documentation for valves already installed in the field was compiled and evaluated. Documentation was prepared that stated the valves met the criteria of FCI-70-2-2003.

On 10/09/2008, after review of the documentation that was used to classify valves as Safety Significant, it was determined that the valves were tested with water, not air or nitrogen and at varying pressures. Additionally, documentation discussing the equivalency of the testing performed to that specified in FCI 70-2-2003, as allowed by the DSA, could not be identified. As a result, it was initially determined that this condition represents a potential inadequacy of the documented safety analysis (PISA). Subsequent review determined that the issue identified in the PER resulted in a TSR violation.

Corrective Action WRPS-PER-2008-0309.3 required the following:

CATPR-01-02 - Change DSA development process to direct that the term "or equivalent" not be used in the DSA for performance criteria for safety-significant SSCs unless the criteria for "equivalent" is provided within the DSA or a reference is provided in the DSA to a document verified to define/control criteria approval.

Deliverable: Revised HNF-2353, "Nuclear Safety and Licensing Desk Instructions or other applicable document.

The purpose of this e-mail is to let you know that WRPS-PER-2008-0309.3 has been completed with the release of Desk Instructions TC-ENG-SB-D-10, Rev A. This corrective action will now be submitted for closure. A copy of the Desk Instructions is attached above.

Thank you,

David Bragg
Base Operations Maintenance Engineering

Task# WRPS-PER-2008-0309.4

E-STARS[R] Report
Task Detail Report
07/08/2009 1634

TASK INFORMATION			
Task#	WRPS-PER-2008-0309.4		
Subject	WRPS-PER-2008-0309; SIG; CATPR-01-01 - Submit Safety Basis Amendment to revise double valve isolation testing acceptance criteria to ORP.		
Parent Task#	WRPS-PER-2008-0309	**Status**	Open
Reference	WRPS-PER-2008-0309	**Due**	09/06/2009
Originator	^PER CAs	**Priority**	Medium
Originator Phone		**Category**	PER
Origination Date	01/28/2009 1405	**Generic1**	None
Remote Task#		**Generic2**	None
Deliverable	PER Review	**Generic3**	None
Class	None	**View Permissions**	Global
Instructions	*No Instructions*		

ROUTING LISTS

1	Corrective Action	Active
	CATPR-01-01 - Submit Safety Basis Amendment to revise double valve isolation testing acceptance criteria to ORP. Deliverable: Copy of submittal to ORP of the Safety Basis Amendment changes for double valve isolation testing criteria. RESPONSIBLE MANAGER: When this corrective action is complete, enter a closure statement in E-STARS and close the E-STARS subtask. Refer to the Problem Evaluation Request procedure TFC-ESHQ-Q-C-C-01, Section 4.4 for closure documentation requirements	
	• Eppler, Larry L - Assign - Delegated - 04/06/2009 1310 *Instructions:* ↳ *Routing List:* Route List - Active *Instructions:* • Kripps, Larry J - Assign - Awaiting Response	
	• Knight, Mark A - Review - Awaiting Response - Due Date - 09/04/2009 0000 *Instructions:*	

ATTACHMENTS

Attachments	1. EM-RP--WRPS-TANKFARM-2008-0001 FINAL.htm 2. Link to PER 3. Occurrence Report EM-RP--WRPS-TANKFARM-2008-0001 4. WRPS-PER-2008-0309 CLOSURE ROOT CAUSE ANALYSIS REPORT.pdf

COMMENTS

No Comments

TASK DUE DATE HISTORY

Modified	01/28/2009 1405 - ^PER CAs	**New Due Date**	09/06/2009 0000
Modified	01/28/2009 1405 - ^PER CAs	**New Due Date**	01/05/2010 0000

SUB TASK HISTORY

No Subtasks

-- end of report --

Task# WRPS-PER-2008-0309.5

E-STARS[R] Report
Task Detail Report
07/08/2009 1634

TASK INFORMATION			
Task#	WRPS-PER-2008-0309.5		
Subject	WRPS-PER-2008-0309; SIG; CATPR-01-03 - Evaluate other uses of standards and equivalency, or similar wording in the DSA and provide recommend		
Parent Task#	WRPS-PER-2008-0309	**Status**	Open
Reference	WRPS-PER-2008-0309	**Due**	09/06/2009
Originator	^PER CAs	**Priority**	Medium
Originator Phone		**Category**	PER
Origination Date	01/28/2009 1405	**Generic1**	None
Remote Task#		**Generic2**	None
Deliverable	PER Review	**Generic3**	None
Class	None	**View Permissions**	Global
Instructions	*No Instructions*		

ROUTING LISTS

1	Corrective Action	Active
	CATPR-01-03 - Evaluate other uses of standards and equivalency, or similar wording in the DSA and provide recommendation to remedy any associated undefined or vague terms. Deliverable: Copy of submittal to ORP of the Safety Basis Amendment changes for double valve isolation testing criteria. RESPONSIBLE MANAGER: When this corrective action is complete, enter a closure statement in E-STARS and close the E-STARS subtask. Refer to the Problem Evaluation Request procedure TFC-ESHQ-Q-C-C-01, Section 4.4 for closure documentation requirements	
	• Eppler, Larry L - Assign - Delegated - 04/06/2009 1310 *Instructions:* ↳ *Routing List:* Route List - Active *Instructions:* • Kripps, Larry J - Assign - Awaiting Response	
	• Knight, Mark A - Review - Awaiting Response - Due Date - 09/04/2009 0000 *Instructions:*	

ATTACHMENTS

Attachments	1. EM-RP--WRPS-TANKFARM-2008-0001 FINAL.htm 2. Link to PER 3. Occurrence Report EM-RP--WRPS-TANKFARM-2008-0001 4. WRPS-PER-2008-0309 CLOSURE ROOT CAUSE ANALYSIS REPORT.pdf

COMMENTS

No Comments

TASK DUE DATE HISTORY

Modified	01/28/2009 1405 - ^PER CAs	**New Due Date**	09/06/2009 0000
Modified	01/28/2009 1405 - ^PER CAs	**New Due Date**	01/05/2010 0000

SUB TASK HISTORY

No Subtasks

-- end of report --

Task# WRPS-PER-2008-0309.6

E-STARS[R] Report
Task Detail Report
07/08/2009 1635

TASK INFORMATION			
Task#	WRPS-PER-2008-0309.6		
Subject	WRPS-PER-2008-0309; SIG; CC-02-02 - Revise engineering standard TFC-ENG-STD-22, and its technical basis document RPP-RPT-28500, and the Safety Equipme		
Parent Task#	WRPS-PER-2008-0309	**Status**	Open
Reference	WRPS-PER-2008-0309	**Due**	10/06/2009
Originator	^PER CAs	**Priority**	Medium
Originator Phone		**Category**	PER
Origination Date	01/28/2009 1405	**Generic1**	None
Remote Task#		**Generic2**	None
Deliverable	PER Review	**Generic3**	None
Class	None	**View Permissions**	Global
Instructions	*No Instructions*		

ROUTING LISTS

1	Corrective Action	Active
	CC-02-02 - Revise engineering standard TFC-ENG-STD-22, and its technical basis document RPP-RPT-28500, and the Safety Equipment List (SEL) to include approved criteria for safety-significant valves. Deliverable: Copies of changes made to SEL, revised TFC-ENG-STD-22 and RPP-RPT-28500. RESPONSIBLE MANAGER: When this corrective action is complete, enter a closure statement in E-STARS and close the E-STARS subtask. Refer to the Problem Evaluation Request procedure TFC-ESHQ-Q-C-C-01, Section 4.4 for closure documentation requirements	
	• Quintana, Michael S - Assign - Awaiting Response - Due Date - 09/30/2009 0000 *Instructions:*	
	• Knight, Mark A - Review - Awaiting Response - Due Date - 10/04/2009 0000 *Instructions:*	

ATTACHMENTS

Attachments	1. EM-RP--WRPS-TANKFARM-2008-0001 FINAL.htm 2. Link to PER 3. Occurrence Report EM-RP--WRPS-TANKFARM-2008-0001 4. WRPS-PER-2008-0309 CLOSURE ROOT CAUSE ANALYSIS REPORT.pdf

COMMENTS

No Comments

TASK DUE DATE HISTORY

Modified	01/28/2009 1405 - ^PER CAs	**New Due Date**	10/06/2009 0000
Modified	01/28/2009 1405 - ^PER CAs	**New Due Date**	01/05/2010 0000

SUB TASK HISTORY

No Subtasks

-- end of report --

Task# WRPS-PER-2008-0309.7

E-STARS[R] Report
Task Detail Report
07/08/2009 1635

TASK INFORMATION			
Task#	WRPS-PER-2008-0309.7		
Subject	WRPS-PER-2008-0309; SIG; EPA-01 - Perform an End Point effectiveness assessment to: - Verify completion of actions. - Following completion of ac		
Parent Task#	WRPS-PER-2008-0309	**Status**	Open
Reference	WRPS-PER-2008-0309	**Due**	01/01/2010
Originator	^PER CAs	**Priority**	Medium
Originator Phone		**Category**	PER
Origination Date	01/28/2009 1405	**Generic1**	None
Remote Task#		**Generic2**	None
Deliverable	PER Review	**Generic3**	None
Class	None	**View Permissions**	Global
Instructions	*No Instructions*		

ROUTING LISTS

1	Corrective Action	Active
	EPA-01 - Perform an End Point effectiveness assessment to: - Verify completion of actions. - Following completion of actions, interview a sample of engineers (from nuclear safety, system engineers, and discipline leads). Ensure 90% minimum understand importance of lessons learned identified in CC-01-01. - Following approval of Safety Basis Amendment per CATPR-01-01, review a sample of recently completed CGI documentation or Technical Evaluations, as applicable, for compliance to revised process. Deliverable: Completed End Point Assessment that has been presented to and accepted by the Executive Safety Review Board. RESPONSIBLE MANAGER: When this corrective action is complete, enter a closure statement in E-STARS and close the E-STARS subtask. Refer to the Problem Evaluation Request procedure TFC-ESHQ-Q-C-C-01, Section 4.4 for closure documentation requirements	
	• Knight, Mark A - Assign - Awaiting Response - Due Date - 12/30/2009 0000 *Instructions:*	

ATTACHMENTS

Attachments	1. EM-RP--WRPS-TANKFARM-2008-0001 FINAL.htm 2. Link to PER 3. Occurrence Report EM-RP--WRPS-TANKFARM-2008-0001 4. WRPS-PER-2008-0309 CLOSURE ROOT CAUSE ANALYSIS REPORT.pdf

COMMENTS

No Comments

TASK DUE DATE HISTORY

Modified	01/28/2009 1405 - ^PER CAs	**New Due Date**	01/01/2010 0000
Modified	01/28/2009 1405 - ^PER CAs	**New Due Date**	01/05/2010 0000

SUB TASK HISTORY

No Subtasks

-- end of report --

Save

Problem Evaluation Request (PER)

WRPS-PER-2008-0322
Closed 12/09/2008 09:30

PER No	Date of Discovery	Time of Discovery (24:00)	Project
WRPS-PER-2008-0322	11/04/2008	11:30	S&H

Location

2704HV

How Was Problem Discovered

Assessment

Description of Concern or Problem

During an assessment of the Occupational Safety and health Administration injury/illness Recordkeeping Review of Tank Farm Contract, ORP inquired about the absence of lost work days in the CAIRS log and was provided with email documentation related to the case. Due to the nature of the illness all information reviewed was considered sensitive and protected by privacy laws. The ORP reviewer disagreed with the logic and direction given by a former CH2M HILL safety manager and recommended WRPS record the seven days as lost work days. The new WRPS management concurred and the days were added to the CAIRS database.

Requirement Not Satisfied	Source Document Number
Equipment Identification Number	**System Identification**

Immediate actions Taken or Planned

The issue was discussed with new WRPS management who concurred CH2M HILL may have misinterpreted 29 CFR 1904 requirements related to this case. As a result, the case was properly added to the CAIRS database and the issue was closed.

Recommended Corrective actions

No further action required; recommend issue as trend only

Originator Contact

No

Originators Name	Originators ID	Originators Phone	Date Initiated
Taber, Teena K	H7640681	(509) 373-2050	12/04/2008

SHIFT OPERATIONS REVIEW

Title

ORP reviewer disagreed with the logic given by a former CH2M safety mgr and recommended WRPS record the 7 days as lost work

How Discovered	Agency
self-ID result of event	

Reportability	SSC Operability	Operability Review	Comp Measures Req
Non-Reportable	N/A	N/A	

Describe actions Taken or Recommended

No BO SO actions required.

SO Reviewer Name	SO Reviewer ID	SO Reviewer Phone	SO Review Date
Wallgren, Carl B	H0099480	(509) 373-2689	12/05/2008

SCREENING

PER Significance Level	
Trend Only	

Independent Assessment Review	Occurrence Report Number	Externally Identified	
No		No	
Assigned Responsible	**Facilities Rep / SSO**	**Safety Management Rep**	

Manager			
Tuckness, Dennis T			
Program		**Safety Management Program**	
• ^N/A^		• ^N/A^	
PER Screening Comments			
THis was a non-cited finding. TM			
Causal Code			
MGT/Comm/Train	**Human Performance**	**GEMS**	**Equip/Eng/Other**
Failed Barrier	**ORPS Code**	**Functional Area**	**Work Process**
	Not Applicable	Assessments	
ISMS	**Consequence Code**		
Provide feedback and continuous improvement	• Records - Errors or incomplete data recording, checklists		
PER Screening Chair	**PER Screening Chair ID**	**PER Screening Chair Phone**	**PER Screening Date**
Owen, Annette	H0054042	(509) 372-0533	12/08/2008
PAAA REVIEW			
PAAA Screening	**PAAA Codes**	**Function Codes**	
PAAA, Non-NTS Reportable	• 10 CFR 851.23 (a)(2)	• Records • Recordkeeping	
NTS Report Number	**NTS Report Date**		
Repetitive / Recurrent	**Programmatic**	**Intentional Violation / Misrepresentation**	
No	No	No	
PAAA Screening Comments			
29CFR1904.7(b)(3)			
PAAA Reviewer Name	**PAAA Review Date**		
Anderson, Craig E	12/08/2008		
PAAA Approver Name	**PAAA Approve Date**		
Anderson, Craig E	12/09/2008		
SENIOR MANAGEMENT REVIEW/CONCURRENCE			
TF Operations Morning Leadership Call			
No comments. 12/9/08			
Instructions for Responsible Manager			
Senior Management	**Sr Mgmt ID**	**Sr Mgmt Phone**	**Sr Mgmt Review Date**
Owen, Annette	H0054042	(509) 372-0533	12/09/2008
ATTACHMENTS			
Link to PER			

-- End of Report --
12/09/2008 09:45 AM

Task# WRPS-PER-2008-0322

E-STARS[R] Report
Task Detail Report
12/09/2008 0945

TASK INFORMATION

Task#	WRPS-PER-2008-0322		
Subject	Trend; ORP reviewer disagreed with the logic given by a former CH2M safety mgr and recommended WRPS record the 7 days as lost work		
Parent Task#		Status	CLOSED 12/09/2008
Reference		Due	12/06/2008
Originator	^PER Coordinator	Priority	Medium
Originator Phone		Category	PER
Origination Date	12/04/2008 1536	Generic1	None
Remote Task#		Generic2	None
Deliverable	PER Review	Generic3	None
Class	None	View Permissions	Global
Instructions	*No Instructions*		

ROUTING LISTS

1	Review Initial PER	Inactive
	Review New PER	
	• ^SO(Wallgren, Carl B) - Review - Concur - 12/05/2008 1248 *Instructions:*	
	• ^PER Screening(Owen, Annette) - Review - Concur - 12/08/2008 1248 *Instructions:*	
	• ^Mgr Review(Owen, Annette) - Review - Concur - 12/09/2008 0921 *Instructions:*	

ATTACHMENTS

Attachments	1. Link to PER

COLLABORATION

COMMENTS

No Comments

TASK DUE DATE HISTORY

Task# WRPS-PER-2008-0322			
Modified	12/04/2008 1536 - ^PER Coordinator	New Due Date	12/06/2008 1630
SUB TASK HISTORY			
No Subtasks			
-- end of report --			

Save

Problem Evaluation Request (PER)

WRPS-PER-2008-0323
Closed 12/09/2008 09:30

PER No	Date of Discovery	Time of Discovery (24:00)	Project
WRPS-PER-2008-0323	12/02/2008	15:00	Day Ops-W

Location

272S

How Was Problem Discovered

Radiological Surveys

Description of Concern or Problem

While performng weekly routine surveillances at 272-S Camera Decontamination Facility per task COF-W011 approximately 20 pieces of bunny poop were found contaminated along the Conatamination Area Perimeters. The contamination levels found were 3,000 to 10,000 dpm/probe area beta/gamma, <20dpm/probe area alpha.

Requirement Not Satisfied	Source Document Number

Equipment Identification Number	System Identification
N/A	

Immediate actions Taken or Planned

Notified Health Physics FLM, Shift operations manager, and guarded area until bunny poop was picked up by operations and disposed of in Rad Waste.

Recommended Corrective actions

Perform more frequent and thorough surveys of the area to better establish the source and extent of the contaminated bunny poop. Also, the existing areas posted as "CA"s in the immediate area still need to be cleaned up to help eliminate the possibility of cross contamination from wind and animals.

Originator Contact

No

Originators Name	Originators ID	Originators Phone	Date Initiated
Robillard, Donna L	H0091107	(509) 373-3353	12/04/2008

SHIFT OPERATIONS REVIEW

Title

routine surveillances at 272-S Camera Decon Facility discovered rabbitt droppings

How Discovered	Agency
self-ID prior to event	

Reportability	SSC Operability	Operability Review	Comp Measures Req
Non-Reportable	N/A	N/A	

Describe actions Taken or Recommended

Based on rabbitt droppings being picked up and disposed of, no immediate BO SO actions required.

SO Reviewer Name	SO Reviewer ID	SO Reviewer Phone	SO Review Date
Wallgren, Carl B	H0099480	(509) 373-2689	12/05/2008

SCREENING

PER Significance Level	
Trend Only	

Independent Assessment Review	Occurrence Report Number	Externally Identified	
No		No	

Assigned Responsible Manager	Facilities Rep / SSO	Safety Management Rep	
Brannan, Patrick (Brad)			

Program		Safety Management Program	
• ^N/A^		• ^N/A^	
PER Screening Comments			
None. TM			
Causal Code			
MGT/Comm/Train	**Human Performance**	**GEMS**	**Equip/Eng/Other**
Failed Barrier	**ORPS Code**	**Functional Area**	**Work Process**
	Not Applicable	Radiation Protection	• Radiological Contamination Control
ISMS	**Consequence Code**		
Develop and implement hazard controls	• Contam - Legacy - Discovery of contamination from past practices or spills in soil, animal, or vegetation		
PER Screening Chair	**PER Screening Chair ID**	**PER Screening Chair Phone**	**PER Screening Date**
Owen, Annette	H0054042	(509) 372-0533	12/08/2008
PAAA REVIEW			
PAAA Screening	**PAAA Codes**	**Function Codes**	
Not subject to PAAA			
NTS Report Number	**NTS Report Date**		
Repetitive / Recurrent	**Programmatic**	**Intentional Violation / Misrepresentation**	
No	No	No	
PAAA Screening Comments			
PAAA Reviewer Name	**PAAA Review Date**		
Anderson, Craig E	12/08/2008		
PAAA Approver Name	**PAAA Approve Date**		
Anderson, Craig E	12/09/2008		
SENIOR MANAGEMENT REVIEW/CONCURRENCE			
TF Operations Morning Leadership Call			
No comments. 12/9/08			
Instructions for Responsible Manager			
Senior Management	**Sr Mgmt ID**	**Sr Mgmt Phone**	**Sr Mgmt Review Date**
Owen, Annette	H0054042	(509) 372-0533	12/09/2008
ATTACHMENTS			
Link to PER			

-- End of Report --
12/09/2008 09:45 AM

Task# WRPS-PER-2008-0323

E-STARS[R] Report
Task Detail Report
12/09/2008 0945

TASK INFORMATION

Task#	WRPS-PER-2008-0323		
Subject	Trend; routine surveillances at 272-S Camera Decon Facility discovered rabbitt droppings		
Parent Task#		Status	CLOSED 12/09/2008
Reference		Due	12/06/2008
Originator	^PER Coordinator	Priority	Medium
Originator Phone		Category	PER
Origination Date	12/04/2008 1556	Generic1	None
Remote Task#		Generic2	None
Deliverable	PER Review	Generic3	None
Class	None	View Permissions	Global
Instructions	*No Instructions*		

ROUTING LISTS

1	Review Initial PER	Inactive
	Review New PER	
	• ^SO(Wallgren, Carl B) - Review - Concur - 12/05/2008 1252 *Instructions:*	
	• ^PER Screening(Owen, Annette) - Review - Concur - 12/08/2008 1250 *Instructions:*	
	• ^Mgr Review(Owen, Annette) - Review - Concur - 12/09/2008 0921 *Instructions:*	

ATTACHMENTS

Attachments	1. Link to PER

COLLABORATION

COMMENTS

No Comments

TASK DUE DATE HISTORY

Task# WRPS-PER-2008-0323			
Modified	12/04/2008 1556 - ^PER Coordinator	New Due Date	12/06/2008 1630
SUB TASK HISTORY			
No Subtasks			
-- end of report --			

Save

Problem Evaluation Request (PER)

WRPS-PER-2008-0337
Closed 03/02/2009 14:00

PER No	Date of Discovery	Time of Discovery (24:00)	Project
WRPS-PER-2008-0337	12/08/2008	08:56	ATS/222-S

Location

222S

How Was Problem Discovered

DOE FAC REP

Description of Concern or Problem

ORP Facility Representative made the following entry in the Operational Awareness database:
Issue Type: Finding Significance Level: 1
Statement:
Failure to tag a Laboratory Balance appropriately
Discussion:
On December 2, 2008 the FR observed that Laboratory Balance LE-BAL-087 located in Room 4K Hood 12 had a calibration due date of October 23, 2008 but had not been tagged with a Service Required Tag. This tag ensures that the balance is not mistakenly used until it is calibrated.
Requirements:
Procedure ATS 310 2.21, Use of Equipment Control Tags and Labels, implements the requirements of DOE Order 5480.19, Conduct of Operations Requirements for DOE Facilities, Chapter VIII, "Control of Equipment and System Status." Procedure ATS 310 2.21, Section 4.09, "Service Required Tag," requires, in part, that equipment that need servicing or repair be tag and
processed for repair.

Requirement Not Satisfied	Source Document Number
Procedure ATS 310 2.21, Use of Equipment Control Tags and Labels	DOE Order 5480.19, Conduct of Operations Requirements for DOE Facilities, Chapter VIII
Equipment Identification Number	**System Identification**
LE-BAL-087	

Immediate actions Taken or Planned

1) Tagged balance with Service Required Tag.
2) Discussed issue with ORP Facility Representative.
3) Determined cause to be a data entry error in CHAMPS during operations acceptance of an unrelated work package. The data entry error caused the balance calibration to be reset for an additional 365 days. CHAMPS no longer flagged the balance as needing calibration or removal from service with a Service Required tag.
4) Initiated a new work package to calibrate balance.

Recommended Corrective actions

Improve process for Operational Acceptance of work to reduce the opportunity for data entry errors.

Originator Contact

Assign responsible manager to me.

Originators Name	Originators ID	Originators Phone	Date Initiated
Greenough, Keith J	H0068375	(509) 373-9541	12/09/2008

SHIFT OPERATIONS REVIEW

Title

Failure to Tag a Laboratory Balance Appropriately

How Discovered	Agency
self-ID prior to event	

Reportability	SSC Operability	Operability Review	Comp Measures Req
Non-Reportable	N/A	N/A	

Describe actions Taken or Recommended

No additional actions taken or recommended

SO Reviewer Name	SO Reviewer ID	SO Reviewer Phone	SO Review Date

Allen, Richard (Rich) E	H0037011	(509) 373-5344	12/10/2008
SCREENING			
PER Significance Level			
PER with Resolution			
Independent Assessment Review	**Occurrence Report Number**	**Externally Identified**	
No		Yes	
Assigned Responsible Manager	**Facilities Rep / SSO**	**Safety Management Rep**	
Greenough, Keith J			
Program		**Safety Management Program**	
• ^N/A^		• In-Service Surveillance & Maintenance	
PER Screening Comments			
PER w/ Res with informal Apparent Cause Analysis (Nancy Brown 12/11/08)			
Causal Code			
A4B1C01	Management Problem Management Methods LTA Management policy guidance/expectations not well-defined, understood or enforced		
MGT/Comm/Train	**Human Performance**	**GEMS**	**Equip/Eng/Other**
Failed Barrier	**ORPS Code**	**Functional Area**	**Work Process**
	Not Applicable	Maintenance	• Calibration - Equipment
ISMS	**Consequence Code**		
Perform work within the controls	• Calibration Standard - Calibration standard failed, expired, or otherwise LTA		
PER Screening Chair	**PER Screening Chair ID**	**PER Screening Chair Phone**	**PER Screening Date**
Brown, Nancy L	H0088797	(509) 373-0992	12/11/2008
PAAA REVIEW			
PAAA Screening	**PAAA Codes**	**Function Codes**	
PAAA, Non-NTS Reportable	• 10 CFR 830.122 (e)(1) • 10 CFR 830.122 (e)(3) • 10 CFR 830.122 (e)(4)	• M&TE (control and calibration) • Maintenance	
NTS Report Number	**NTS Report Date**		
Repetitive / Recurrent	**Programmatic**	**Intentional Violation / Misrepresentation**	
No	No	No	
PAAA Screening Comments			
PAAA Reviewer Name	**PAAA Review Date**		
Anderson, Craig E	12/10/2008		
PAAA Approver Name	**PAAA Approve Date**		
Anderson, Craig E	12/11/2008		
SENIOR MANAGEMENT REVIEW/CONCURRENCE			
TF Operations Morning Leadership Call			
Operations Morning Leadership Call is no longer performed nor required.			
Instructions for Responsible Manager			
Review the PER Screening Tab and Senior Manager Review for requested data. Complete the task in E-STARS in accordance			

with TFC-ESHQ-Q_C-C-01, and TFC-ESHQ-Q_ADM-C-12 Apparent Cause Analysis & Corrective Action Planning.

Senior Management	Sr Mgmt ID	Sr Mgmt Phone	Sr Mgmt Review Date
Owen, Annette	H0054042	(509) 372-0533	12/15/2008

CAUSE ANALYSIS

Description of Occurrence

On December 2, 2008, the ORP Facility Representative observed that Laboratory Balance LE-BAL-087 located in Room 4K Hood 12 had a calibration due date of October 23, 2008, but had not been tagged with a Service Required Tag. This tag ensures that the balance is not mistakenly used until it is calibrated. The equipment tagging process for 222-S is performed by procedure ATS-310, Section 2.21, "Use of Equipment Control Tags and Labels." The procedure requires, in part, that equipment that need servicing or repair be tagged with a Service Required Tag. A review of the calibration history for balance LE-BAL-087 in the CHAMPS database, determined work order LAB-WO-08-2095 was generated to perform calibration prior to the October 23, 2008 due date. A data entry error in CHAMPS during operations acceptance of an unrelated work package caused the calibration due date to reset for an additional 365 days. CHAMPS no longer flagged the balance as needing calibration or removal from service with a Service Required tag.

Extent of Condition

A review of CHAMPS database for 222-S was performed and no other instances of this error was identified.

Safety Significance

This particular error had no impact on safety significance; however, this same error occurring with a work package having safety significance could have impacted safety. The corrective action addresses prevention of these related conditions.

Generic Implications

Remedial Corrective Action

Upon determination of the direct cause, the Operations Engineers were verbally notified by the Operations Manager on December 8, 2008 to perform the "Field Work Complete" and "Operations Acceptance" steps independently. This management expectation was formally issued via internal memorandum WRPS-0900030 by J. L. Heinemann on January 6, 2009.

Causal Analysis, Apparent Cause and/or Root Cause Analysis

The apparent cause of this event was determined to be A4B1C01, Management policy guidance/expectation not well-defined, understood or enforced. The data entry error occurred when an Operations Engineer was completing "Field Work Complete" and "Operations Acceptance" steps in CHAMPS simultaneously. The performance of these two steps by the same person at the same time allowed the data entry error to go undetected. There was no procedural guidance or management expectation that these two functions be performed independently.

The management expectation was formally issued via internal memorandum (see Remedial Corrective Action above). No further corrective actions are warranted.

ATTACHMENTS

Link to PER

WRPS-PER-2008-0337 Management Expectation Letter.pdf

AUDIT HISTORY

Change Date	Auditor	Comments
12/15/2008 07:38	Owen, Annette	Responsible Manager Task Launched by Owen, Annette

-- End of Report --
03/02/2009 02:15 PM

Task# WRPS-PER-2008-0337			
E-STARS[R] Report Task Detail Report 03/02/2009 0215			
TASK INFORMATION			
Task#	WRPS-PER-2008-0337		
Subject	RES; Failure to Tag a Laboratory Balance Appropriately		
Parent Task#		Status	CLOSED 03/02/2009
Reference		Due	01/23/2009
Originator	^PER Coordinator	Priority	Medium
Originator Phone		Category	PER
Origination Date	12/09/2008 1229	Generic1	None
Remote Task#		Generic2	None
Deliverable	PER Review	Generic3	None
Class	None	View Permissions	Global
Instructions	*No Instructions*		
ROUTING LISTS			
1	Responsible Manager		Inactive
	Review the PER Screening Tab and Senior Manager Review for requested data. Complete the task in E-STARS in accordance with TFC-ESHQ-Q_C-C-01, and TFC-ESHQ-Q_ADM-C-12 Apparent Cause Analysis & Corrective Action Planning.		
	• Greenough, Keith J - Assign - Completed with comments - 01/16/2009 1454 *Instructions:*		
	• Greenough, Keith J - Assign - Completed with comments - 01/16/2009 1455 *Instructions:* Did you contact the originator about the PER? Document your contact in the response window.		
2	Review Initial PER		Inactive
	Review New PER		
	• ^SO(Allen, Richard (Rich) E) - Review - Concur - 12/10/2008 0819 *Instructions:*		
	• ^PER Screening(Brown, Nancy L) - Review - Concur - 12/11/2008 1443 *Instructions:*		
	• ^Mgr Review(Owen, Annette) - Review - Concur - 12/15/2008 0738 *Instructions:*		
ATTACHMENTS			

Task# WRPS-PER-2008-0337			
Attachments	1. Link to PER 2. WRPS-PER-2008-0337 Management Expectation Letter.pdf		
COLLABORATION			
COMMENTS			
Poster	Greenough, Keith J - 01/16/2009 0201		
	Completed		
	Discussed action taken with ORP Facility Rep, Courtney Blanchard on January 6, 2008 and obtained concurrence that his issue was properly addressed.		
Poster	Greenough, Keith J - 01/16/2009 0201		
	Completed		
	Closed		
Poster	^PER Coordinator (Glaman, Linda R) - 03/02/2009 0103		
	CLOSED		
	PER complete. L Glaman		
TASK DUE DATE HISTORY			
Modified	12/15/2008 0738 - ^PER Coordinator	New Due Date	01/23/2009 1630
Modified	12/15/2008 0738 - ^PER Coordinator	New Due Date	01/23/2009 1630
Modified	12/09/2008 1229 - ^PER Coordinator	New Due Date	12/11/2008 1630
SUB TASK HISTORY			
No Subtasks			
-- end of report --			

INTEROFFICE MEMORANDUM

washington river protection solutions

WRPS- 0900030

Date: January 6, 2009

To:

J. D. Boisoneau, T6-20
R. L. Derting, T6-29
K. J. Greenough, T6-14
D. L. Gunderson, T6-12
C. Howald IV, T6-20
D. Homan, T6-14
S. R. Longoria, T6-12
W. A. Mooney, T6-29
L. L. Mueller, T6-12
P. M. O'Neill, T6-29
R. O. Robertson, T6-29
D. D. Robinson, T6-14
E. E. Root, T6-29

From: J. L. Heinemann, Manager
222-S Laboratory Maintenance

Subject: **WORK MANAGEMENT EXPECTATION 2; FIELD WORK COMPLETE DOCUMENTATION IN CHAMPS**

Recently there have been several incidents of incorrect Preventive Maintenance (PM) recall dates entered into CHAMPS. Several factors were identified as the cause, they include:

1) Field Work Supervisor (FWS) entered "Field Work Complete (FWC) date" in CHAMPS using the same date the FWS signed "FWS Completed By", not the date the field work was performed. The resultant was a new PM recall due date that exceeded the required recall date.
2) During post work order review the "FWC date" in CHAMPS was found in error and was corrected to reflect the FWS's signature date on the work record, not the date the field work was performed. The resultant was a new due date that exceeded the periodicity required of the PM.
3) The FWS entered a "FWC date" in CHAMPS, then signed "Operations Acceptance" for the work in CHAMPS. The date was entered for work that had not been released or performed. The mistake resulted in a new recall date 12 months from the date the work was signed for, but the work was never performed.

Casual analysis determined that employee's do not understand what triggers the new PM recall due date in CHAMPS.

Explanation:

The mechanism for trigging the new PM due date for bi-monthly and above is the date entered in the "FWC date" block in CHAMPS. This date should reflect the same date that the craft signed off for completion of the PM on the data card.

Expectations:

1) FWS shall always enter the date the craft entered on the data card when entering "FWC date" in CHAMPS.
2) Date errors identified during post work order review shall be corrected to reflect the date the craft entered on the data card. Errors identified during post work order review should be fed back to the FWS.
3) The Operations Acceptance of the work should be performed by an independent person, not the same person that signs for "FWS Completed By".

JLH:PDF

cc: JLH file/LB

Save

Problem Evaluation Request (PER)

WRPS-PER-2008-0356
In Process/Work

PER No	Date of Discovery	Time of Discovery (24:00)	Project
WRPS-PER-2008-0356	11/06/2008	16:30	ATS/222-S

Location

222S

How Was Problem Discovered

Radiological Surveys

Description of Concern or Problem

Perkin-Elmer shipped 14 empty Hedge Hog II shipping packages from their facility at North Billerica, MA to 222-S Laboratory that contained internal Beta/Gamma contamination. The shipment of empty Hedge Hog II containers originated from 222S Laboratory in September-08 and was arranged by Analytical Technologies & Laboratories (ATL) in conjunction with PNNL. PNNL subsequently utilized the containers to provide Sr90 material to Perkin-Elmer in support of an established DOE sponsored isotope exchange program. PNNL then requested Perkin-Elmer to ship the empty containers back to 222S Laboratory and at that time the internal contamination was discovered by WRPS Radiological Control Technicians. A critique of the event was conducted by ATL with participation from WRPS and PNNL mangement. Upon conclusion of the critique, PNNL reported the event (SC—PNSO-PNNL-PNNLNUCL-2008-0006) in the ORPS database.

Requirement Not Satisfied	Source Document Number
	SC—PNSO-PNNL-PNNLNUCL-2008-0006

Equipment Identification Number	System Identification

Immediate actions Taken or Planned

Participated in critique conducted by ATL Inc. with participation from PNNL.

Recommended Corrective actions

Evaluate future use of Hedge Hog shipping containers and determine if storage/brokering of the shipping containers is included in the scope of the current TOC contract. If scope is bounded by existing TOC contract, develop managment programs to effectively control the use of the shipping containers.

Originator Contact

I would like to review the the corrective actions at closure to ensure they were effective

Originators Name	Originators ID	Originators Phone	Date Initiated
Hardy, Don B	H0085161	(509) 373-0364	12/11/2008

SHIFT OPERATIONS REVIEW

Title

Contaminated shipping containers received at 222-S

How Discovered	Agency
self-ID result of event	

Reportability	SSC Operability	Operability Review	Comp Measures Req
Non-Reportable	N/A	N/A	

Describe actions Taken or Recommended

None at this time.

SO Reviewer Name	SO Reviewer ID	SO Reviewer Phone	SO Review Date
Greenough, Keith J	H0068375	(509) 373-9541	12/15/2008

SCREENING

PER Significance Level	
PIE/CIM	

Independent Assessment Review	Occurrence Report Number	Externally Identified	
No		No	

Assigned Responsible	Facilities Rep / SSO	Safety Management Rep	

Manager			
Hardy, Don B			
Program		**Safety Management Program**	
• ALARA-222-S		• ^N/A^	
PER Screening Comments			
PNNL reported the event in the ORPS database. PIE/CIM to evaluate future use of Hedge Hog containers and to review the current TOC contract. (Don White) (Nancy Brown 12/16/08)			
Causal Code			
MGT/Comm/Train	**Human Performance**	**GEMS**	**Equip/Eng/Other**
Failed Barrier	**ORPS Code**	**Functional Area**	**Work Process**
	Not Applicable	Analytical Chemistry	• Sample Management: Transport
ISMS	**Consequence Code**		
Define scope of work	• ^N/A^ - No consequence code applies		
PER Screening Chair	**PER Screening Chair ID**	**PER Screening Chair Phone**	**PER Screening Date**
Brown, Nancy L	H0088797	(509) 373-0992	12/16/2008
PAAA REVIEW			
PAAA Screening	**PAAA Codes**	**Function Codes**	
Not subject to PAAA			
NTS Report Number	**NTS Report Date**		
Repetitive / Recurrent	**Programmatic**	**Intentional Violation / Misrepresentation**	
No	No	No	
PAAA Screening Comments			
PNNL issue, being managed by PNNL.			
PAAA Reviewer Name	**PAAA Review Date**		
Anderson, Craig E	12/16/2008		
PAAA Approver Name	**PAAA Approve Date**		
Anderson, Craig E	12/16/2008		
SENIOR MANAGEMENT REVIEW/CONCURRENCE			
TF Operations Morning Leadership Call			
TF Operations Morning Leadership Call is no longer required.			
Instructions for Responsible Manager			
Evaluate suggestion, enter comments and required actions on PIE/CIM tab of the PER. Disposition in accordance with TFC-ESHQ-Q_C-C-01, Problem Evaluation Request.			
Senior Management	**Sr Mgmt ID**	**Sr Mgmt Phone**	**Sr Mgmt Review Date**
Owen, Annette	H0054042	(509) 372-0533	12/17/2008
CAUSE ANALYSIS			
Description of Occurrence			
Extent of Condition			
Safety Significance			

Generic Implications

Remedial Corrective Action

Causal Analysis, Apparent Cause and/or Root Cause Analysis

CORRECTIVE ACTIONS

Actionee	Action Due Date	E-STARS Number
Nielsen, Judith A	07/31/2009	WRPS-PER-2008-0356.1

Action

Update the Administrative Interface Agreement (AIA), 29633-BOP-AIA-0001, rev A between WRPS and ATL to include specific verbiage relative to roles and responsibilities as they relate to utilization of DOE owned Type A shipping containers.

Corrective Action Attachments

- DOE - WRPS Contracting Officer E-correspondence.htm
- Link to PER
- RE_ WRPS-PER-2008-0356_1.msg
- WRPS-PER-2008-0356 - 222-S Laboratory PER Screening Information.msg
- WRPS-PER-2008-0356 - Extension Request.msg

Actionee	Action Due Date	E-STARS Number
Van Meighem, Jeff S	06/30/2009	WRPS-PER-2008-0356.2

Action

Recommend revision to the J3 table of the TOC contract to clarify roles and responsibilities as they relate to utilization of DOE owned Type A shipping containers.

Corrective Action Attachments

- DOE - WRPS Contracting Officer E-correspondence.htm
- Link to PER
- WRPS-0901052 Letter.pdf
- WRPS-0901052 Enclosure.pdf
- WRPS-PER-2008-0356 - 222-S Laboratory PER Screening Information.msg
- WRPS-PER-2008-0356 - Extension Request.msg

PIE/CIM

Evaluation of PIE/CIM Initiative

Received correspondence from both the DOE-ORP program manager (Andy Stevens) and WRPS contracting officer (John Armstead) that brokering of type A shipping containers was within the current scope of the TOC contract (see attached email) . Two actions will be launched to clarify roles and responsibilities for brokering subsequent shipments utilizing Type A containers.

-One action will be to update the Administrative Interface Agreement (AIA), 29633-BOP-AIA-0001, rev A between WRPS and ATL to include specific verbiage relative to roles and responsibilities as they relate to utilization of DOE owned Type A shipping containers. (Judith Nielsen)

-The second action will be to recommend revision to the J3 table of the TOC contract to clarify roles and responsibilities as they relate to utilization of DOE owned Type A shipping containers. (Jeff Van Meighen)

ATTACHMENTS

DOE - WRPS Contracting Officer E-correspondence.htm

Link to PER

WRPS-PER-2008-0356 - 222-S Laboratory PER Screening Information.msg

WRPS-PER-2008-0356 - Extension Request.msg

AUDIT HISTORY

Change Date	Auditor	Comments
12/17/2008 08:40	Owen, Annette	Responsible Manager Task Launched by Owen, Annette
12/18/2008 09:06	Owen, Annette	'Screening Program' was changed.
03/26/2009 14:20	Glaman, Linda R	Corrective actions Launched by Glaman, Linda R

06/30/2009 10:03	Glaman, Linda R	Change to Cause Analysis screen/Corrective Action plan.
06/30/2009 10:06	Glaman, Linda R	extend CA. 1 to 7-31-09 per attached email request. LBG The revision to the interface agreement has been drafted and is in the review process. Because of the priorities of the ISMS, EMS and RA documentation this did not get the attention early enough to have the reviews completed before the due date of 6/30/09. I am requesting the due date be extended to July 31, 2009. J Nielson 6-30-09

-- End of Report --
07/08/2009 04:55 PM

Task# WRPS-PER-2008-0356

E-STARS[R] Report
Task Detail Report
07/08/2009 1655

TASK INFORMATION			
Task#	WRPS-PER-2008-0356		
Subject	PIE; Contaminated shipping containers received at 222-S		
Parent Task#		**Status**	Open
Reference		**Due**	08/11/2009
Originator	^PER Coordinator	**Priority**	Medium
Originator Phone		**Category**	PER
Origination Date	12/11/2008 1118	**Generic1**	None
Remote Task#		**Generic2**	None
Deliverable	PER Review	**Generic3**	None
Class	None	**View Permissions**	Global
Instructions	*No Instructions*		

ROUTING LISTS

1	Corrective actions Routing Lis	Active
	To launch Corrective actions.	
	• ^PER CAs - Assign - Awaiting Response - Due Date - 08/07/2009 0000 *Instructions:*	
2	Responsible Manager	Inactive
	Evaluate suggestion, enter comments and required actions on PIE/CIM tab of the PER. Disposition in accordance with TFC-ESHQ-Q_C-C-01, Problem Evaluation Request.	
	• Hardy, Don B - Assign - Completed with comments - 03/24/2009 1237 *Instructions:*	
	• Hardy, Don B - Assign - Completed with comments - 03/24/2009 1237 *Instructions:* Did you contact the originator about the PER? Document your contact in the response window.	
3	Review Initial PER	Inactive
	Review New PER	
	• ^SO(Greenough, Keith J) - Review - Concur with comments - 12/15/2008 0939 *Instructions:*	
	• ^PER Screening(Brown, Nancy L) - Review - Concur - 12/16/2008 1450 *Instructions:*	
	• ^Mgr Review(Owen, Annette) - Review - Concur - 12/17/2008 0840 *Instructions:*	

ATTACHMENTS

Attachments	1. DOE - WRPS Contracting Officer E-correspondence.htm 2. Link to PER 3. WRPS-PER-2008-0356 - 222-S Laboratory PER Screening Information.msg 4. WRPS-PER-2008-0356 - Extension Request.msg

COMMENTS

Poster	^SO (Greenough, Keith J) - 12/15/2008 0939

Task# WRPS-PER-2008-0356

	Concur
	222-S SO screen completed.
Poster	^PER Coordinator (Owen, Annette) - 02/12/2009 1117
	Extend to 3/30/09 per attached e-mail request.
	Additional contract clarification has been requested. An appropriate response cannot be identified until the clarification has been received.
Poster	Hardy, Don B - 03/24/2009 1237
	Completed
	Completed evaluation. Two corrective actions launched. dbh 3/24/09
Poster	Hardy, Don B - 03/24/2009 1237
	Completed
	complete. dbh 3/24/09
Poster	^PER Coordinator (Glaman, Linda R) - 06/30/2009 1006
	Due Date Extension
	extend CA. 1 to 7-31-09 per attached email request. LBG The revision to the interface agreement has been drafted and is in the review process. Because of the priorities of the ISMS, EMS and RA documentation this did not get the attention early enough to have the reviews completed before the due date of 6/30/09. I am requesting the due date be extended to July 31, 2009. J Nielson 6-30-09

TASK DUE DATE HISTORY

Modified	06/30/2009 1006 - ^PER Coordinator	**New Due Date**	08/11/2009 0000
Modified	03/26/2009 1420 - ^PER Coordinator	**New Due Date**	07/18/2009 0000
Modified	03/26/2009 1420 - ^PER Coordinator	**New Due Date**	07/14/2009 0000
Modified	02/12/2009 1117 - ^PER Coordinator (Owen, Annette)	**New Due Date**	03/30/2009 1630
Modified	12/17/2008 0840 - ^PER Coordinator	**New Due Date**	02/09/2009 1630
Modified	12/17/2008 0840 - ^PER Coordinator	**New Due Date**	02/09/2009 1630
Modified	12/11/2008 1118 - ^PER Coordinator	**New Due Date**	12/13/2008 1630

SUB TASK HISTORY

Subtask#	WRPS-PER-2008-0356.1				
Subject	WRPS-PER-2008-0356; PIE; Update the Administrative Interface Agreement (AIA), 29633-BOP-AIA-0001, re				
Originator	^PER CAs				
	Routing List	Corrective Action			
		Assignee	Nielsen, Judith A	**Response**	
		Assignee	Hardy, Don B	**Response**	
Subtask#	WRPS-PER-2008-0356.2				
Subject	WRPS-PER-2008-0356; PIE; Recommend revision to the J3 table of the TOC contract to clarify roles and responsibilities as they relate to utilization of				
Originator	^PER CAs				

Task# WRPS-PER-2008-0356					
	Routing List	Corrective Action			
		Assignee	Van Meighem, Jeff S	**Response**	Completed w/Com
		Assignee	Hardy, Don B	**Response**	Concur w/Com

-- end of report --

From: Hardy, Don B
Sent: Monday, March 02, 2009 12:28 PM
To: Trenchard, Glyn D
Cc: McLeod, Robert G (Bob) (PNSO); Stevens, Andrew J; Hall, K M (Kathleen) - CHG; Armstead, John M; Hatcher, Kathy A; Renberger, Duane L; Nielsen, Judith A
Subject: RE: Statement of Work PNNL 090210RAB
Glyn,

We are moving forward under the premise that these activities (brokering of type A containers for use by DOE contractors) is authorized under C.2.1.3 Sub-CLIN 1.3: Analytical Laboratory Support section of the TOC contract. You will note the Mr. Stevens and Mr. Poniatowski are on distribution of the correspondence Mr. Armstead (WRPS Contracting Officer) sent to Judith Nielsen and myself. As Ms. Hatcher notes, these activities should be further clarified in the next revision of the J.3 table of the contract. This shipment will likely go the 2nd week of Mar-09. Pls let me know if you have further questions.

Don

From: Trenchard, Glyn D
Sent: Monday, March 02, 2009 9:59 AM
To: Bushaw, Ruth A; Hardy, Don B; Hall, K M (Kathleen) - CHG; Armstead, John M
Cc: McLeod, Robert G (Bob) (PNSO); Stevens, Andrew J
Subject: FW: Statement of Work PNNL 090210RAB

What is the status on this? De we have the decisions/agreements needed to move forward?

Glyn Trenchard
Tank Farms Programs and Projects
509-373-4016
509-438-0448

From: Stevens, Andrew J
Sent: Monday, March 02, 2009 9:51 AM
To: Trenchard, Glyn D
Subject: FW: Statement of Work PNNL 090210RAB

From: Hatcher, Kathy A
Sent: Thursday, February 26, 2009 5:35 PM
To: Armstead, John M; Nielsen, Judith A; Hardy, Don B
Cc: Stevens, Andrew J; Poniatowski, Joseph C; Van Meighem, Jeff S; Jennings, Beverly J; Thomas, Brian R; Jennings, Thomas M
Subject: RE: Statement of Work PNNL 090210RAB

This is what Don has been needing. Thanks to all for final clarification. This is an area that should be added to the J.3 table in the next revision and we have captured this.

From: Armstead, John M
Sent: Thursday, February 26, 2009 3:57 PM
To: Nielsen, Judith A; Hardy, Don B
Cc: Stevens, Andrew J; Poniatowski, Joseph C; Van Meighem, Jeff S; Hatcher, Kathy A; Jennings, Beverly J; Thomas, Brian R; Jennings, Thomas M
Subject: Statement of Work PNNL 090210RAB

Judith,

In recognition of Andy Stevens opinion that the WRPS part of this work is within the general contract scope (**C.2.1.3 Sub-CLIN 1.3: Analytical Laboratory Support)** and was routinely done under the previous contract, I concur that it is okay to proceed with the WRPS support of forwarding this shipment to PNNL. It is understood that the cost of WRPS involvement is not part of our baseline and will be funded by ATL in accordance with ATL'S cost estimate quote no. PNNL090210RAB WRPS support ($2,832.16)and associated Statement of Work. Please contact me if there are questions or concerns regarding this direction.

Regards

Mike Armstead
Contract Manager, WRPS
Work: (509) 372-9168
Cell: (509) 942-8542

From: Nielsen, Judith A
Sent: Thursday, February 26, 2009 6:24 AM
To: Armstead, John M
Subject: FW: Draft Statement of Work

Unless I hear different from you I will proceed to let the lab know that we can move forward with this shipment and with future sharing of the shipping containers (in a controlled manner).

Judith Nielsen
Manager
Waste Services & Tank Sampling
509 438-1077
509 373-6732

From: Nielsen, Judith A
Sent: Wednesday, February 25, 2009 2:42 PM
To: Armstead, John M; Van Meighem, Jeff S
Subject: FW: Draft Statement of Work

I just received this direction from Andy Stevens. I think we can go ahead with the shipment.

Your thoughts?

Judith Nielsen
Manager
Waste Services & Tank Sampling
509 438-1077
509 373-6732

From: Stevens, Andrew J
Sent: Wednesday, February 25, 2009 1:35 PM
To: Nielsen, Judith A
Subject: RE: Draft Statement of Work

This is an interesting piece of history.

In my opinion, the WRPS part of this work is within the contract scope and was routinely done under the previous contract. However, funding and management of the work may not have been specifically covered in approved baselines. In my experience, this level of work is not typically defined in your WBS. If PNNL funding doesn't cover all the costs, then WRPS is responsible for making a decision on whether to proceed, or request more funding from PNNL.

Let me know if this needs to be discussed further.

From: Nielsen, Judith A
Sent: Wednesday, February 25, 2009 10:06 AM
To: Stevens, Andrew J
Subject: FW: Draft Statement of Work
Importance: High

Judith Nielsen
Manager
Waste Services & Tank Sampling
509 438-1077
509 373-6732

From: Hardy, Don B
Sent: Wednesday, February 25, 2009 9:35 AM
To: Armstead, John M
Cc: Nielsen, Judith A
Subject: FW: Draft Statement of Work
Importance: High

Mike,

Left you a phone message. I have delayed this shipment, but still need contracting officers direction to proceed at a later date. Pls give me a call.

Thanks,
Don

From: Hardy, Don B
Sent: Thursday, February 19, 2009 9:24 AM
To: Nielsen, Judith A; Armstead, John M
Cc: Hall, K M (Kathleen) - CHG; Hatcher, Kathy A; Renberger, Duane L
Subject: FW: Draft Statement of Work
Importance: High

Judith/John,

Since we have not been able to identify verbiage in the TOC that authorizes this scope of work, I believe direction from the DOE contracting officer is required prior to proceeding with the shipment. Subsequently, a revision to the J3 table may be in order.

I believe this action rests with John with input from Judith. Pls let me know if this is incorrect.

The shipment is currently scheduled for the 1st week in March-09. I am available to answer questions and/or help in any way.

thanks,
Don

From: Bushaw, Ruth A
Sent: Wednesday, February 18, 2009 10:20 AM
To: Nielsen, Judith A; Hall, K M (Kathleen) - CHG
Cc: Hardy, Don B

Subject: FW: Draft Statement of Work
Importance: High

Judith and Kathleen,

Attached is a copy of the statement of work and our cost estimate for the shipment of the 618-2 Safe samples to PNNL. The cost estimate includes the WRPS support time in it. Please let me know ASAP if you have any comments on this, since we need to get the agreement signed off to get the charge codes in place for getting prep work started next week.

I have asked Sharon to add Judith as an approval signature for agreement to use the shipping containers.

Thanks,

Ruth A. Bushaw
Project Manager
222-S Laboratory
373-4314

From: Phillips, Sharon L [mailto:sharon.phillips@pnl.gov]
Sent: Monday, February 16, 2009 10:21 AM
To: Bushaw, Ruth A
Cc: Phillips, Sharon L
Subject: Draft Statement of Work

Ruth,

Attached is a draft Statement of Work for transfer of the plutonium from 222-S to 329. Please review it as soon as possible and provide me with your comments. Can you especially review the samples that I have listed and make sure they are correct. The original list showed 7 samples, but there was a note that one of them (S06M001063) was picked up by the waste group on 6/26/07, so I only have 6 listed for transfer. Also, I did not provide the deliverable dates, so if you can help me out with that, that would be great.

If you have any questions, please give me a call at 372-4269.

<<STATEMENT OF WORK.doc>> <<PNNL090210RAB- PNNL Safe Sample Shipment.pdf>>

Sharon Phillips

NSD Operations Office

Task# WRPS-PER-2008-0356.1

E-STARS[R] Report
Task Detail Report
07/08/2009 1657

TASK INFORMATION			
Task#	WRPS-PER-2008-0356.1		
Subject	WRPS-PER-2008-0356; PIE; Update the Administrative Interface Agreement (AIA), 29633-BOP-AIA-0001, re		
Parent Task#	WRPS-PER-2008-0356	**Status**	Open
Reference	WRPS-PER-2008-0356	**Due**	08/07/2009
Originator	^PER CAs	**Priority**	Medium
Originator Phone		**Category**	PER
Origination Date	03/26/2009 1420	**Generic1**	None
Remote Task#		**Generic2**	None
Deliverable	PER Review	**Generic3**	None
Class	None	**View Permissions**	Global
Instructions	*No Instructions*		

ROUTING LISTS		
1	Corrective Action	Active
	Update the Administrative Interface Agreement (AIA), 29633-BOP-AIA-0001, rev A between WRPS and ATL to include specific verbiage relative to roles and responsibilities as they relate to utilization of DOE owned Type A shipping containers. RESPONSIBLE MANAGER: When this corrective action is complete, enter a closure statement in E-STARS and close the E-STARS subtask. Refer to the Problem Evaluation Request procedure TFC-ESHQ-Q-C-C-01, Section 4.4 for closure documentation requirements	
	• Nielsen, Judith A - Assign - Awaiting Response - Due Date - 07/31/2009 0000 *Instructions:*	
	• Hardy, Don B - Review - Awaiting Response - Due Date - 08/04/2009 0000 *Instructions:*	

ATTACHMENTS	
Attachments	1. DOE - WRPS Contracting Officer E-correspondence.htm 2. Link to PER 3. RE_ WRPS-PER-2008-0356_1.msg 4. WRPS-PER-2008-0356 - 222-S Laboratory PER Screening Information.msg 5. WRPS-PER-2008-0356 - Extension Request.msg

COMMENTS	
Poster	^PER Coordinator (Glaman, Linda R) - 06/30/2009 1006
	Due Date Extension
	extend CA. 1 to 7-31-09 per attached email request. LBG The revision to the interface agreement has been drafted and is in the review process. Because of the priorities of the ISMS, EMS and RA documentation this did not get the attention early enough to have the reviews completed before the due date of 6/30/09. I am requesting the due date be extended to July 31, 2009. J Nielson 6-30-09

TASK DUE DATE HISTORY			
Modified	06/30/2009 1006 - ^PER Coordinator	**New Due Date**	07/31/2009 0000
Modified	03/26/2009 1420 - ^PER CAs	**New Due Date**	07/10/2009 0000

Task# WRPS-PER-2008-0356.1			
Modified	03/26/2009 1420 - ^PER CAs	**New Due Date**	07/14/2009 0000
SUB TASK HISTORY			
No Subtasks			

-- end of report --

Message

From: Nielsen, Judith A
Sent: Tuesday, June 30, 2009 6:35 AM
To: ^WRPS Corrective Action Group
Cc: Reynolds, Tammy R; Stalkfleet, Glenna K
Subject: RE: WRPS-PER-2008-0356.1

Sorry, The extension request is for 356.1.

Judith Nielsen
Manager, Waste Services & Tank Sampling
509 438-1077
509 373-6732
washington river protection solutions

From: ^WRPS Corrective Action Group
Sent: Monday, June 29, 2009 3:57 PM
To: Nielsen, Judith A; ^WRPS Corrective Action Group
Cc: Reynolds, Tammy R; Stalkfleet, Glenna K
Subject: RE: WRPS-PER-2008-0356
Importance: High

This PER has two corrective actions launched. Which action is this extension request for, 356.1 or 356.2?

Thanks...As always, please call if you have questions

Linda RB Glaman
Operations Support Specialist/CAM
376-1776/376-6249
2750E/A-208/R2-87
The Lone CAM-mer

From: Nielsen, Judith A
Sent: Monday, June 29, 2009 8:41 AM
To: ^WRPS Corrective Action Group
Cc: Nielsen, Judith A; Reynolds, Tammy R; Stalkfleet, Glenna K
Subject: WRPS-PER-2008-0356

This request if for an extension of the WRPS-PER-2008-0356, Update the Administrative Interface Agreement 29633-BOP-IAI-0001 between WRPS and ATL.

The revision to the interface agreement has been drafted and is in the review process. Because of the priorities of the ISMS, EMS and RA documentation this did not get the attention early enough to have the reviews completed before the due date of 6/30/09.

I am requesting the due date be extended to July 31, 2009.

Judith Nielsen
Manager, Waste Services & Tank Sampling

509 438-1077
509 373-6732
washington river protection solutions

Message

From: White, Don (WRPS)
Sent: Tuesday, December 16, 2008 12:20 PM
To: Brown, Nancy L
Cc: Hardy, Don B; Glaman, Linda; Owen, Annette; Alexander, Sandy K
Subject: 222-S Laboratory PER Screening Information (12-16-2008)

Nancy,

Good afternoon.

Of the 17 PERs in today's screening package, one is 222-S Laboratory-related. Below are the suggested significance level and initial trend codes based upon discussion with the responsible manager.

If you have any questions, please call me. I will talk with you at the 2:00 screening call. Thanks.

Don
373-9144

PER Number:	**WRPS-PER-2008-0356**
PER Coding	**Suggested Codes**
Responsible Manager	D. B. Hardy
SMP Owner	N/A
Significance Level	PIE/CIM
Program/Project Code	ATS/222-S
Functional Area Code	Analytical Chemistry
Work Process Code	Sample Management - Transport
ISMS Code	Define scope of work
Consequence Code	Contamination - Material or equipment
Were significance and trend codes discussed with the RM or a delegate?	Yes; discussed with D. B. Hardy on December 16, 2008
Refer issue to APC for review?	No
Refer issue to ALARA Committee for review?	Yes

Message

From: Alexander, Sandy K
Sent: Wednesday, February 11, 2009 1:31 PM
To: ^WRPS Corrective Action Group
Cc: Hardy, Don B
Subject: WRPS-PER-2008-0356 - Extension Request

WRPS-PER-2008-0356 (PIE/CIM)
RM: Don Hardy

Please extend PER to Mar-30-2009.

Justification: Additional contract clarification has been requested. An appropriate response cannot be identified until the clarification has been received.

Thank You,
Sandy Alexander
373-0064
Performance Assurance / Lab Support Services

-----Original Message-----
From: Hardy, Don B
Sent: Monday, February 09, 2009 8:36 AM
To: Alexander, Sandy K
Subject: FW: TOC contract question

See email thread as basis for extension.

-----Original Message-----
From: Hatcher, Kathy A
Sent: Wednesday, February 04, 2009 6:50 AM
To: Hardy, Don B
Subject: FW: TOC contract question

Update...Joe is still looking!

-----Original Message-----
From: Armstead, John M
Sent: Tuesday, February 03, 2009 5:10 PM
To: Hatcher, Kathy A
Subject: RE: TOC contract question

Kathy,
I haven't found anything yet but will continue to look and give you a shout tomorrow.

Mike

-----Original Message-----
From: Hatcher, Kathy A
Sent: Tuesday, February 03, 2009 4:26 PM
To: Hardy, Don B
Cc: Nielsen, Judith A; Hatcher, Kathy A; Armstead, John M
Subject: RE: TOC contract question

I forwarded this to Mike Armstead who is the contracting officer. There is nothing in the J.3 Shared service table that discusses this service as something provided by TOC to other site groups. So if it is elsewhere in the contract Mike will have to weigh in on that.

Having said that...I sanitized your email to me and asked my counterparts at PNNL and PHMC if they could offer me a history lesson related to this subject. The following is the PNNL response:

"PNNL has many projects that use type A shipping containers.
Historically, each project co-ordinates with the 222-S lab (ATL) to get a container for shipment. The project pays for shipping, but the container has been provided for no charge. PNNL uses a Hanford document to direct the packaging and unpackaging of the containers at PNNL, WHC-SD-TP-0MM-002. Based on the number this may be a TOC document (through 222-S).

We expect this service from the TOC to continue. PNNL projects that use type A shipping containers are currently budgeted to receive containers at no cost, paying for only shipping. Any anticipated changes to the current arrangements would have ramifications to all projects that ship radioactive materials.

PNNL also receives radioactive samples in type A shipping containers from other Hanford contractors. We don't make those arrangements, but return the containers to 222-S so we assume that they also get their containers from 222-S."

From this response it sounds like TOC has done this historically without cost to the other contractors. If this is to continue then we need to have it in the J.3 table. If you find out this is not part of our scope, we will need to have Mike working with us to coordinate first with DOE and then with the other contractors.

Mike have you had a chance to review this.

-----Original Message-----
From: Hardy, Don B
Sent: Monday, February 02, 2009 11:16 AM
To: Hatcher, Kathy A
Cc: Nielsen, Judith A
Subject: TOC contract question

http://tfc.rl.gov/per/index.cfm?page=main.cfm&perid=29156

Kathy,

Could I get your help with a contract interpretation question? In Nov-08 ATL shipped some empty type A containers to PNNL for subsequent use in a DOE sponsored isotope exchange program. Upon receipt of the empty containers, PNNL packaged radionuclides and shipped then to Perkin Elmer unbeknownst to ATL or WRPS. After Perkin Elmer removed the radionuclides from the type A containers (under agreement w/ PNNL), they shipped the empty containers back to 222S Laboratory. Subsequent radiological surveys of the empty containers by WRPS RCTs identified RAD contamination that led to: 1.) Fact Finding conducted by ATL with WRPS and PNNL 2.) Reporting in the ORPS database by PNNL.

Historically (prior to 10/1/08), the TFC contractor has brokered the use of these type A shipping containers for DOE-ORP for use by various Hanford Site Contractors. My specific question is ------- under the TOC contractor is this scope authorized under the existing TOC contract?

Typically we may get requests for container use ~6 times/year.

I have attached a link to the PER that provides a better description of the event.

Any help you can provide relative to my question would be greatly appreciated.

Thanks,
Don

Task# WRPS-PER-2008-0356.2

E-STARS[R] Report
Task Detail Report
07/08/2009 1658

TASK INFORMATION			
Task#	WRPS-PER-2008-0356.2		
Subject	WRPS-PER-2008-0356; PIE; Recommend revision to the J3 table of the TOC contract to clarify roles and responsibilities as they relate to utilization of		
Parent Task#	WRPS-PER-2008-0356	**Status**	Open
Reference	WRPS-PER-2008-0356	**Due**	07/10/2009
Originator	^PER CAs	**Priority**	Medium
Originator Phone		**Category**	PER
Origination Date	03/26/2009 1420	**Generic1**	None
Remote Task#		**Generic2**	None
Deliverable	PER Review	**Generic3**	None
Class	None	**View Permissions**	Global
Instructions	*No Instructions*		

ROUTING LISTS		
1	Corrective Action	Active
	Recommend revision to the J3 table of the TOC contract to clarify roles and responsibilities as they relate to utilization of DOE owned Type A shipping containers. RESPONSIBLE MANAGER: When this corrective action is complete, enter a closure statement in E-STARS and close the E-STARS subtask. Refer to the Problem Evaluation Request procedure TFC-ESHQ-Q-C-C-01, Section 4.4 for closure documentation requirements	
	• Van Meighem, Jeff S - Assign - Completed with comments - 06/29/2009 1011 *Instructions:*	
	• Hardy, Don B - Review - Concur with comments - 06/29/2009 1024 *Instructions:*	

ATTACHMENTS	
Attachments	1. DOE - WRPS Contracting Officer E-correspondence.htm 2. Link to PER 3. WRPS-0901052 Letter.pdf 4. WRPS-0901052 Enclosure.pdf 5. WRPS-PER-2008-0356 - 222-S Laboratory PER Screening Information.msg 6. WRPS-PER-2008-0356 - Extension Request.msg

COMMENTS	
Poster	Van Meighem, Jeff S - 06/29/2009 1011
	Completed
	A letter with enclosure was written to ORP recommending changes to J.3 table on 6/26/09. Included in the enclosure to the letter was item #30 "Waste Box Brokering" which covers the assigned ESTARS/PERS action. This action is now completed. Jeff Van Meighem 6/29/09
Poster	Hardy, Don B - 06/29/2009 1024
	Concur

Task# WRPS-PER-2008-0356.2

	Concur with action taken. dbh 6/29/09		
TASK DUE DATE HISTORY			
Modified	03/26/2009 1420 - ^PER CAs	**New Due Date**	07/10/2009 0000
Modified	03/26/2009 1420 - ^PER CAs	**New Due Date**	07/14/2009 0000
SUB TASK HISTORY			
No Subtasks			

-- end of report --

washington river protection solutions
PO Box 850
Richland, WA 99352

June 26, 2009

WRPS-0901052

Mr. J. C. Poniatowski, Contracting Officer
U.S. Department of Energy
Office of River Protection
Post Office Box 450
Richland, Washington 99352-0450

Dear Mr. Poniatowski:

CONTRACT NUMBER DE-AC27-08RV14800 – WASHINGTON RIVER PROTECTION SOLUTIONS LLC ANNUAL INPUT TO UPDATE THE HANFORD SITE SERVICES AND INTERFACE REQUIREMENTS MATRIX IN ACCORDANCE WITH CONTRACT CLAUSE H42.(h)

Washington River Protection Solutions (WRPS) respectfully submits the enclosed recommendations and clarifications to the Hanford Site Services and Interface Requirements Matrix, Section J.3 of the Tank Operations Contract. WRPS understands that the Mission Support Contractor (MSC) has been requested to make a similar recommendation to the U.S. Department of Energy, Richland Operations Office (RL). WRPS requests that these recommendations be considered by the U.S. Department of Energy, Office of River Protection (ORP) and RL in conjunction with those provided by the MSC. Once the MSC has developed the Hanford Site Infrastructure and Services Alignment Plan (ISAP), future recommendations and updates will be provided to the MSC as annual input.

These recommendations are primarily based on over 8 months of operating experience with the J.3 Matrix. Additionally, these recommendations incorporate clarifications provided by ORP and RL over the last year.

Should you have any questions regarding the above, you may contact me at 372-9168, or your staff may contact Mr. J. S. Van Meighem at 373-7333, with any questions regarding this matter.

Sincerely,

(Signature Attached)

J. M. Armstead
Contracts Manager

JSV:EAD

Enclosure: J.3 Hanford Site Services and Interface Requirements Matrix Recommendations for ORP Consideration (4 pages)

cc: ORP Correspondence Control
S. E. Bechtol, ORP
J. A. Diediker, ORP
S. C. Johnson, ORP
W. B. Scott, ORP

WRPS Correspondence Control
J. C. Allen-Floyd, WRPS
W. J. Johnson, WRPS
K. J. Rueter, WRPS
S. M. Sax, WRPS
J. S. Van Meighem, WRPS

Electronically Approved by:

UserName: Armstead, Mike (h0525980)
Title: Prime Contract Manager
Date: Friday, 26 June 2009, 11:29 AM Pacific Daylight Time
Meaning: Signed per Direction of the TOC President's Office
==========

TOC Prime Contract Attachment J.3 General Observations

Individual J.3 Items should be sequentially numbered to aid in identification of each item (ex. Page J.3-2, second item S/B numbered 2).

Each J.3 Item should be fully contained on a single page to ensure all elements of the item are recognized and implemented (ex. Page J.3-54 second item is on two pages J.3-54 and J.3-55).

TOC Prime Contract Attachment J.3 Clarifications and Enhancements

	Item Description	J-3[1]	Recommended Change
1	Information Security - Classified Matter...	7	MSC provides the service to PRC. Neither TOC nor RCCC receive this service. Identify TOC and RCCC as N/A. TOC has no classified matter.
2	Information Security - OUO	8	FH does not currently provide OUO support to the other Hanford Prime Contractors, nor is there a site wide program as required by the J.3. Revise the J.3 to permit self implementation by each Prime, or fund and direct MSC to perform the complete J.3 service as described.
3	Fire and Emergency Response Services	19	Clarify the J.3 description (add scope?) to require HFD support for, and participation in drills and exercises as part of the no cost service.
4	Common Safety Processes	23	PHMC scope did not encompass full J.3 scope description. Assume MSC will provide full service as outlined in J.3?
5	Radiological Assistance Program	24	TOC bears the daily labor costs of assigned RAP Team members, but does not bear equipment costs, RAP specific training costs, nor RAP related costs for RAP Team deployment. Revise J.3 to reflect these actual assignments.

	TOC Prime Contract Attachment J.3 Clarifications and Enhancements		
	Item Description	J-3[1]	Recommended Change
6	Biological controls	34	Physical site boundary descriptions and contractor ownership need to be aligned with the pending revisions to the J.13 and J.14 Attachments to the TOC Prime Contract. Areas of the Hanford Reservation not currently assigned require assignment.
7	Motor Carrier Services	37	J.3 scope assigns all motor carrier services to the MSC. TOC will transition WRPS bargaining unit personnel to MSC on 10/1/09 to align with J.3.
8	Sanitary Waste Management and Disposal	44	J.3 Identifies cost as user based. Currently only user based cost is for roll-off boxes. Revise J.3 to reflect actual costing practice.
9	Property Systems-Acquisition...Spare Parts Program	51	PHMC scope did not encompass full J.3 scope description. TOC currently manages TOC spare parts program. Re-align the J.3 scope accordingly, or assume MSC will provide full service as outlined in J.3 including Spare Parts Program?
10	Hanford Site Pension Plan	52	Cost Allocation column is confusing and needs clarification.
11	Mail Services	58	Clarify J.3 description to identify postage as an included service.
12	Information Systems	66	J.3 scope description needs to be clarified to include specific business, project, and management systems that are provided at no-cost.
13	Hanford Portfolio Planning	70	Not in current PHMC work scope. Clarify J.3 to remove P-3 schedules as the site now uses P-6. Assume MSC will provide full service as outlined in J.3?
14	Page J.3-55	74/75	Clarify whether the item listed on page J.3-55 belong to LLW (page J.3-54), or to TRU waste (page J.3-56), or is it a stand-alone J.3 Item with the Activity inadvertently omitted?
15	Environmental Data Integration	80	PRC funds the database, TOC funds data entry personnel and any development of new data types.
16	Well and Drilling and Decommissioning	81	PRC funds wells outside tank farms and TOC/PRC negotiate who funds wells inside tank farms. Does TOC fund all wells inside tank farms? J.3 clarification requested.

	TOC Prime Contract Attachment J.3 Clarifications and Enhancements		
	Item Description	J-3[1]	Recommended Change
17	Analytical Integrated Planning (222-S Lab)	86	This service is currently paid for directly by DOE-ORP versus the J-3 cost methodology. Revise J.3 to reflect no-cost service.
18	WTP Support	88	ICD 29, FFTF Rad. Na Feed is currently not listed in the "Requirements" list as a document. Recommend adding ICD-029 to list. Clarify who funds MSC participation in ICD document development (meetings, reviews).
19	Laundry Service	90	This service is currently paid for directly by DOE-ORP versus the J-3 cost methodology. Revise J.3 to reflect no-cost service.
20	Occupational Medicine Service	91	This service is currently paid for directly by DOE-ORP versus the J-3 cost methodology. Revise J.3 to reflect no-cost service.
21	Personal Security Services	92	Either delete this from J.3 as it appears to be a duplicate of J.3 item 10, Personnel Security or Clarify J.3 that TOC and other contractors provide input to and receive services through MSC. They obtain the security support services from Westech. There is no direct relationship between TOC and Westech.
22	Sample Analysis (highly radioactive)	94	This service is currently paid for directly by DOE-ORP versus the J-3 cost methodology. Revise J.3 to reflect no-cost service.
23	Steam Services	95	This service is currently paid for directly by DOE-ORP versus the J-3 cost methodology. Revise J.3 to reflect no-cost service.
24	CITS/MSDS Repository and Retrieval	N/A	Not included in the J.3 matrix. Base service is provided at no cost by PHMC with user based service. Define and revise J.3 to reflect as applicable.
25	IH Equipment and Services - testing of breathing air	N/A	Not included in the J.3 matrix. Base service is provided at no cost by PHMC with user based service. Define and revise J.3 to reflect as applicable.
26	Automated Job Hazard Analysis Database and Process	N/A	Not included in the J.3 matrix. Base service is provided at no cost by PHMC with user based service. Define and revise J.3 to reflect as applicable.
27	Payroll, Treasury Services and IRS Reporting	N/A	Not included in the J.3 matrix. Base service is provided at no cost by PHMC with user based service. Define and revise J.3 to reflect as applicable.

TOC Prime Contract Attachment J.3 Clarifications and Enhancements			
	Item Description	J-3[1]	Recommended Change
28	Traffic Management	N/A	Not included in the J.3 matrix. The Contractor shall coordinate on-site and off site shipments, including hazardous materials; serve as the designated shipper; manage overnight small package delivery; manage export/ import/ services with U.S. Customs and freight rate negotiations with carriers; relocate household goods for personnel related to the work performed by the Contractor and their subcontractors under this Contract; Manage inbound and outbound freight including, but not limited to, less-than-truckload (LTL), truckload (TL), and Air. Define and revise J.3 to reflect as applicable.
29	Welding Services	N/A	Not included in the J.3 matrix; should be resolved as to ownership of the program, ownership of the welding resources. Currently PRC owns the Program and FH owns the resources. Clarify, define responsibilities and revise J.3 to reflect as applicable.
30	Waste Box Brokering	N/A	Not included in the J.3 matrix or the TOC contract specifically, but historically TOC has provided this service to site contractors as a user based service: add to J.3 as applicable as a site-service provided by TOC to other Hanford Contractors.
31	Above ground electrical utilities support program	N/A	Not included in the J.3 matrix or the TOC contract specifically, consider adding to J.3 as a site-service provided by MSC to other Hanford Contractors.
32	Sub-surface investigation monitoring	N/A	Not included in the J.3 matrix or the TOC contract specifically, consider adding to J.3 as a site-service provided by MSC to other Hanford Contractors.
33	Dome deflection & settlement surveys	N/A	Not included in the J.3 matrix or the TOC contract specifically, consider adding to J.3 as a site-service provided by MSC to other Hanford Contractors.
34	Water purveyor	N/A	Not included in the J.3 matrix or the TOC contract specifically, consider adding to J.3 as a site-service provided by MSC to other Hanford Contractors.

Note 1 : J-3 Item numbers are identified in a sequential manner with #1 beginning on page J.3 - 1. This page contains both J.3 Items #1 and # 2.

Save

Problem Evaluation Request (PER)

WRPS-PER-2009-0150
In Process/Work

PER No	Date of Discovery	Time of Discovery (24:00)	Project
WRPS-PER-2009-0150	12/30/2008	12:00	Don't Know

Location

AW Farm

How Was Problem Discovered

Engineering Review or Evaluation

Description of Concern or Problem

Background:

The vapor sample probes at the AW Farm tanks have sample tubing attached at valve SV-030. This valve is on a sample tube that terminates just below the riser flange.

In AN and AP Farms, the vapor sample probes have sample tubing attached at valve SV-028. This valve is on a sample tube that terminates in the tank dome space.

These sample ports (SV-028 for AN and AP and SV-030 for AW) are the ones called out in Procedure TF-OPS-IHT-001, IHT Flammable Gas Surveillance on Double Shell Tanks.

Concern/Problem:

There is no reason that AW Farm should have a different sampling location. The sample points should be consistent among the DSTs.

Discussion:

Some people believe that just below the riser flange is the best location to monitor for flammable gases because hydrogen is lighter than air so if any is present, it will accumulate at the top of the risers. An undiluted "blob" of hydrogen could concieveably rise through the surrounding air. However, when hydrogen is mixed with the air, it will not separate out due to gravity and the density difference.

The basis for LCO 3.2.1 states: For controls that require VERIFICATION that the flammable gas concentration is < 25% of the LFL in the tank headspace, flammable gas sampling or monitoring is required in the tank headspace or in a location where the flammable gas sampling or monitoring method ensures a representative measurement of the tank headspace flammable gas concentration.

HNF-IP-1266 Section 5.10 (The implementing procedure for AC 5.10) references TFC-ESHQ-FP-STD-05, Flammable Gas Monitoring, for sampling locations.

TFC-ESHQ-FP-STD-05 requires monitoring at least 3 feet below the bottom of the riser in the exhaust ventilation duct.

Requirement Not Satisfied	Source Document Number

Equipment Identification Number	System Identification
SV-028, SV-030	

Immediate actions Taken or Planned

Prepared PER. Researched requirements.

Recommended Corrective actions

Change AW Farm flammable gas sampling points from SV-030 to SV-028 to be consistent with AN and AP Farms and with Procedure TF-OPS-IHT-001.

Also, specifiy the lower gas sample port on the tanks that have MITs (101-AW, 103-AN, 104-AN, and 105-AN).

Originator Contact			
No			
Originators Name	**Originators ID**	**Originators Phone**	**Date Initiated**
Nicholson, Robert s (Bob)	H0022499	(509) 373-2986	01/26/2009

SHIFT OPERATIONS REVIEW

Title			
Vapor sample probes			
How Discovered		**Agency**	
self-ID prior to event			
Reportability	**SSC Operability**	**Operability Review**	**Comp Measures Req**
Non-Reportable	N/A	N/A	

Describe actions Taken or Recommended

Forward PER to Industrial Safety for resolution. No additional Base Ops Shift Office actions required.

SO Reviewer Name	SO Reviewer ID	SO Reviewer Phone	SO Review Date
Johnson, Brian A	H0003531	(509) 373-2696	01/26/2009

SCREENING

PER Significance Level			
PER with Resolution			
Independent Assessment Review	**Occurrence Report Number**	**Externally Identified**	
No		No	
Assigned Responsible Manager	**Facilities Rep / SSO**	**Safety Management Rep**	
Knight, Mark A			

Program	Safety Management Program
• N/A	• Engineering Configuration Management • Fire Protection • Industrial Hygiene • Nuclear Criticality Safety

PER Screening Comments

cc: Wendy Adams, Chris Woehle, Larry Eppler, Tom Goetz, Michael Quintana
(Nancy Brown 01/27/09).

ADDTIONAL INFORMATION FROM BOB NICHOLSON:

On 1/26/09, I originated WRPS-PER-2009-0150.

This PER incorrectly stated that Procedure TF-OPS-IHT-001 calls out sample tubes on the AW Farm vapor probes that terminate just below the riser flanges.

Drawing H-14-102410 shows that the sample tubes on the AW Farm vapor probes that are called out in this procedure actually terminate 13 feet below the riser flange.

Therefore, these sample tubes terminate at the following levels relative to the tank dome:

AW Farm tanks 102, 103, 104, and 106: 1.41 feet below the tank dome.

105-AW: 0.01 feet above the tank dome.

Tank 101-AW has an MIT. Procedure TF-OPS-IHT-001 specifies V-140. This is the middle gas sample port on the MIT, and it is located 2.34 feet below the dome.

I believe that these points would provide good representative samples for the tank dome space.

The requirement in Procedure TFC-ESHQ-FP-STD-05 for drawing a sample from 3 feet below the dome was probably selected with activities in mind that involved taking a sample from the riser where work was being performed. A point 1.41 feet into the dome space below an open riser would not give a representative sample because it would be mostly air coming

down the riser. This would not be a problem with a MIT or vapor probe.

Robert Nicholson (01/28/09)

PER SCREENING COMMENTS: PER Screening Team is waiting for Nuclear Safety Review prior to launching this PER.
(Nancy Brown 01/28/09)

FURTHER EVALUATION: Determine if this is a TSR violoation.
cc: Mike Grigsby, Kim Roueche
(Nancy 01/29/09)

RESCREEN REQUEST (F/E) Williams, Char 02/04/2009 1638

Further Evaluation - does the described condition represent a TSR violation?

Conclusion: The described condition of flammable gas sample locations does not represent a TSR violation because:
1. The sampling locations in AW Farm (that are less than 3-ft below the riser) do provide representative samples of the tank headspace for steady-state flammable gas accumulation hazards.
2. Representative samples meet the TSR LCO 3.2.1 SR requirement as described in the Bases to LCO 3.2.1

Bases:
Condition: Several flammable gas monitoring points in AW Farm DST risers do not meet the requirements in TFC-ESHQ-FP-STD-05:
• At a location at least three feet below the bottom of a riser (may be through a Standard Hydrogen Monitoring System (SHMS) probe or Multi-Functional Instrument Tree (MIT) middle or lower gas sample port)
Sampling points are at least 1.4 ft below the bottom of the riser (but less than 3 ft below the bottom of the riser) with one exception. AW-105 has the monitoring point 0.01 ft (approximately 1/8-in) up the riser. The sampling point risers are sealed against incoming air (see e-mail from Nicholson, Robert S (Bob) to Grigsby, J M (Mike); Eppler, Larry L; Knight, Mark A dated Mon 2/2/2009 12:11 PM)

Technical evaluation: The requirements for monitoring actively ventilated tanks in TFC-ESHQ-FP-STD-05 (i.e., least three feet below the bottom of a riser) provide for representative sampling including the consideration for sampling through unsealed (e.g., open) risers, monitoring relatively rapid flammable gas concentration transients (e.g., gas release events), and representative sampling even if air is introduced down the sample line during sampling set-up, provided that the sample line is purged prior to taking a FG reading.

In the case of FG monitoring in sealed risers relative to LCO 3.2.1 surveillance requirements, RPP-19013, Measuring Headspace Flammability Through Tank Risers, evaluated flammable gas sampling locations for DSTs. The evaluation concluded that samples from a sealed riser are representative of the tank headspace relative to gas concentrations that can change at most only slowly. This would be applicable to samples that reflect possible degraded tank ventilation that results in steady state flammable gas accumulation, where the concentration increase of concern would be over a period of at least 10 days (the LCO 3.2.1 SR frequency for 241-AW DSTs (SR 3.2.1.5). RPP-19013 concludes that the DST headspace is well mixed (no significant concentration gradients) and that gas diffusion will equilibrate the concentration in the riser with that in the tank headspace over a relatively short period of time (depends on the length of the riser that the gas must diffuse through).

For example, for a sample point 5 ft up the riser, if the headspace concentration changed significantly, the sample point would be at 90% of the new concentration within about 10 hours. The headspace concentration due to steady state accumulation can not change rapidly so this is a conservative example. Note that the diffusion behavior is not affected by whether the tank is on active ventilation or passive ventilation (but the riser must be sealed against incoming fresh air that would dilute the concentration in the riser).

The sample point not in the headspace is only 0.01 ft up the riser. As such samples from within this sealed riser are concluded to be representative of the tank headspace.
There is a possibility of air entering the sample lines when the sample line isolation valve is opened. Because the sample locations are all in the tank headspace or nearly so, this incoming air would be swept up and well mixed in the tank headspace in a short period of time and will not adversely affect representative sampling.

TSR requirements:
LCO 3.2.1 SR requirement - "VERIFY the flammable gas concentration is ? 25% of the LFL in the tank headspace."

Bases to LCO 3.2.1 - "VERIFICATION that the tank headspace flammable gas concentration is maintained below 25% of the LFL provides the necessary assurance that the ventilation system is providing adequate flow through each of the tanks and that safe conditions are maintained.

For controls that require VERIFICATION that the flammable gas concentration is ? 25% of the LFL in the tank headspace, flammable gas sampling or monitoring is required in the tank headspace or in a location where the flammable gas sampling or monitoring method ensures a representative measurement of the tank headspace flammable gas concentration."

TFC-ESHQ-FP-STD-05 Requirements:

Actively Ventilated Tanks

Flammable gas monitoring for actively ventilated tanks shall be performed in the tank headspace by monitoring in one of the following locations:
• At a location at least three feet below the bottom of a riser (may be through a Standard Hydrogen Monitoring System (SHMS) probe or Multi-Functional Instrument Tree (MIT) middle or lower gas sample port)
• In the exhaust ventilation system up to the suction side of the first mixing point for a tank exhausted through a common header
• In the exhaust ventilation system up to the discharge location for a tank that has a dedicated ventilation exhaust system.

Passively Ventilated Tanks

Flammable gas monitoring for passively ventilated tanks shall be performed by monitoring in one of the following locations:
• The tank headspace at a location at least 3 feet below the bottom of a riser (may be through a SHMS probe or MIT middle or lower gas sample port)
• For passively ventilated tanks with no induced gas release event hazard present, an alternative location may be used provided flammable gas monitoring ensures a representative [sample] of the flammable gas concentration in the tank headspace.
? Inside a sealed riser through a sealed connection such as an Enraf flush port which utilizes quick-disconnect plugs with a positive shutoff valve.
? At another location as evaluated by Industrial Safety and Hygiene and approved in accordance with Section 3.2.3.

The described condition of flammable gas sample locations does not represent a TSR violation because:
1. The sampling locations in AW Farm (that are less than 3-ft below the riser) do provide representative samples of the tank headspace for steady-state flammable gas accumulation hazards.
2. Representative samples meet the TSR LCO 3.2.1 SR requirement as described in the Bases to LCO 3.2.1

PER RE-SCREENING COMMENTS (F/E): Change from F/E to PER w/ Res with Formal Apparent Cause Analysis including Extent of Condition. Non-compliance with TFC-ESHQ-FP-STD-05.
cc: Wendy Adams, Chris Woehle, Michael Quintana, Cheryl Myott
(Nancy Brown 02/09/09)

Causal Code			
A1B3C01	Design/Engineering Problem Design/Documentation LTA Design/documentation not complete		
A5B2C08	Communications LTA Written Communications Content LTA Incomplete/situation not covered		
MGT/Comm/Train	**Human Performance**	**GEMS**	**Equip/Eng/Other**
Failed Barrier	**ORPS Code**	**Functional Area**	**Work Process**
	Not Applicable	Engineering	• Engineering Evaluation • Fire Protection - Design • Flammable Gases • IH Monitoring
ISMS	**Consequence Code**		
Perform work within the controls	• Procedure - Administrative - Procedure ambiguous, in error, could not be worked, was not used		
PER Screening Chair	**PER Screening Chair ID**	**PER Screening Chair Phone**	**PER Screening Date**
Brown, Nancy L	H0088797	(509) 373-0992	01/27/2009
PAAA REVIEW			
PAAA Screening	**PAAA Codes**	**Function Codes**	
Not subject to PAAA			
NTS Report Number	**NTS Report Date**		

Repetitive / Recurrent	**Programmatic**	**Intentional Violation / Misrepresentation**	
No	No	No	

PAAA Screening Comments

PAAA Reviewer Name	**PAAA Review Date**	
Anderson, Craig E	02/11/2009	
PAAA Approver Name	**PAAA Approve Date**	
Anderson, Craig E	02/11/2009	

CAUSE ANALYSIS

Description of Occurrence

Background:

The vapor sample probes at the AW Farm tanks have sample tubing attached at valve SV-030. This valve is on a sample tube that terminates just below the riser flange.

In AN and AP Farms, the vapor sample probes have sample tubing attached at valve SV-028. This valve is on a sample tube that terminates in the tank dome space.

These sample ports (SV-028 for AN and AP and SV-030 for AW) are the ones called out in Procedure TF-OPS-IHT-001, IHT Flammable Gas Surveillance on Double Shell Tanks.

Concern/Problem:

There is no reason that AW Farm should have a different sampling location. The sample points should be consistent among the DSTs.

Discussion:

Some people believe that just below the riser flange is the best location to monitor for flammable gases because hydrogen is lighter than air so if any is present, it will accumulate at the top of the risers. An undiluted "blob" of hydrogen could concieveably rise through the surrounding air. However, when hydrogen is mixed with the air, it will not separate out due to gravity and the density difference.

The basis for LCO 3.2.1 states: For controls that require VERIFICATION that the flammable gas concentration is < 25% of the LFL in the tank headspace, flammable gas sampling or monitoring is required in the tank headspace or in a location where the flammable gas sampling or monitoring method ensures a representative measurement of the tank headspace flammable gas concentration.

HNF-IP-1266 Section 5.10 (The implementing procedure for AC 5.10) references TFC-ESHQ-FP-STD-05, Flammable Gas Monitoring, for sampling locations.

TFC-ESHQ-FP-STD-05 requires monitoring at least 3 feet below the bottom of the riser in the exhaust ventilation duct.

Extent of Condition

An engineering review was performed to determined the extent of condition for the vapor sample probe positions. In addition the problem identified in this PER, additional issues were identified and are included in the discussion below.

Problems:

None of the plastic sample tubes that are connected to the vapor probes and MITs in the DST farms are documented on the drawings. The only exception is the plastic sample tube that is installed on the 102-AY vapor, which is shown on the P&ID drawing. The drawings show that all of the available ports are capped.

MITs are installed at tanks 101-AW, 103-AN, 104-AN, 105-AN, 101-SY, and 103-SY. Each MIT has 3 sampling ports, a pressure sensing port, and a water lance. Each of these 5 items has an isolation valve. The WST P&ID drawings show the 5 isolation valves, but provide no indication of which valve goes to what item.

The sampling points are not standard among the DST Farms. Each DST has an MIT per Drawing H-2-85141 or a vapor probe per Drawing H-14-102410. The following ports are used for dome space gas sampling:
- MIT lower gas sample port (103-AN, 104-AN, 105-AN, 103-SY)
- MIT middle gas sample port (101-AW, 101-SY)
- ½ inch SHMS return line on vapor probes (102-AW through 106-AW)

• ½ inch heated sample tube on vapor probes (101-AY, 102-AY, 102-AZ, 102-SY)
• ¼ inch tubes on vapor sample probes (all tanks not listed above)

The implementing procedure for AC 5.10 is HNF-IP-1266 section 5.10. This procedure references Procedure TFC-ESHQ-FP-STD-05 for sampling locations, which requires the sample location to be at least 3 feet below the bottom of the riser or in the exhaust ventilation duct. The sample ports that are currently used at all of the AW Farm tanks, 101-SY, and 5 of the 8 AP Farm tanks are closer to the bottom of the riser than 3 feet. The ECNs that are covered by this PrHA will bring the AW Farm tanks and 101-SY into compliance with the 3 foot requirement by selecting existing longer sample tubes on the MITs and vapor probes. The 5 tanks in AP Farm will remain out of compliance because the lowest sample tube on the vapor probes is currently being used. This tube terminates 2.29 to 2.31 feet below the bottom of the riser. At these tanks, riser extensions were installed to raise the vapor probes in preparation for increased waste level limits. Providing sample tubes for these 5 tanks in AP Farm that comply with the 3 foot requirement or changing the requirement are beyond the scope of the current design changes and does not pose a TSR violation or a threat to worker safety.

Sampling Procedures TF-OPS-IHT-007, TFC-OPS-IHT-004, and TFC-OPS-IHT-003 specify a travel time in the sample tube of 2 sec/ft and a sample rate of 0.5 Lpm. The ½ inch sample tubes on the vapor probes have a 0.035 inch wall thickness, and have a minimum travel time of 3.43 sec/ft at 0.5 Lpm. The 2 sec/ft at 0.5 Lpm travel time is bounding for the sample tubes on the MITs and the ¼ inch sample tubes on the vapor probes.

Safety Significance

Vapor sample probes are used to support flammable gas monitoring within the head sapce of a waste tank per HNF-IP-1266, Section 5.10 (The implementing procedure for AC 5.10). The sample probes and their tubes are general service equipment. The issue identified in this PER does not create or result in a unsafe condition or hazard to plant personnel, the environment or plant equipment.

Generic Implications

Remedial Corrective Action

- Identified problem by writting this PER.

- Performed engineering walkdowns of the tank farms, applicable tank farm procedures, and reviewed facility drawings to ensure there was no hazard to plant personnel, the environment, or tank farms equipment.

- Updated procedure TF-OPS-IHT-001 to ensure adequate information was present to correctly determine the wait time for sampling at the tanks which use the 1/2" sample tubes.

Causal Analysis, Apparent Cause and/or Root Cause Analysis

A Why Staircase was performed to determine the cause for the issue identified by this PER.

Why aren't the sampling points uniform throughout the tank farms?

Various engineers were responsible for the tank farms, and these assignments changed over time. Hence the location of the sample probe installations was not determined by a single engineer.

Why didn't the engineers provide a standard location for the sample probe installations?

This design requirement was not communicated adequately between Engineering personnel to ensure consistency.

Why didn't the design for a standard location get communicated between the engineers?

The sample probe equipment and its specific requirements were not fully documented in design media (facility drawings and ECNs).

What impact if any does this inconsistency pose?

As a result of the inconsistency, the proper wait time for sampling at AW Farm tanks was not specified in TF-OPS-IHT-001. This time is slightly greater due to the larger sample tube diameter. Hence when readings were taken, personnel defaulted to the standard 2 sec/ft requirement provided in other procedures. This procedure has been changed to provide the necessary information for determining the proper sample time for AW Farm. In addition, the sample locations are not uniform and tube lengths/locations vary.

Another impact is that in AN and AP Farm the sample tubing is connected to ¼" metal tubing, while in AW, AY, and SY Farms the sample tubing is connected to the 1/2" metal tubing. Two corrective actions will be launched to prepare ECN(s) and work package(s) to make all the sample connections standard.

Causal Codes: The cause of the issue identified in this PER was determined to be A1B3C01; "Design/Engineering Problem," "Design/ Documentation LTA," and "Design/Documentation not complete." A contributing cause was A5B2C08; "Communications LTA," Written Communications Content LTA," "Incomplete/Situation not Covered."

Two corrective actions will be launched to prepare create an ECN and a work package to standardize the sample tubes.

A third corrective action will be launched to update procedure TF-OPS-IHT-001 wait time information accordingly when the change is made to use only the smaller ¼" tubes. Note that procedure TF-OPS-IHT-001 was already modified as part of the remedial corrective actions to cover the special situation (the use of 1/2" sample tubes) for the AW Farm sample wait time.

CORRECTIVE ACTIONS

Actionee	Action Due Date	E-STARS Number
Nicholson, Robert s (Bob)	07/08/2009	WRPS-PER-2009-0150.1

Action

Prepare ECN(s) to correct facility drawings for the following:

To document that metal caps have been removed and replaced by lengths of plastic sample tubing on gas sample ports on the MITs and vapor probes at each DST.

Change the currently used sample locations, where necessary, so that the lower gas sample port will be the standard port at all DSTs with MITs, and the ¼ in. sample tube will be the standard port for all DSTs with vapor probes.

Deliverable - Copy of released ECN(s)

Corrective Action Attachments

- e-mail that corrects PER statements.pdf
- Link to PER
- P1010157.JPG
- P1260077.JPG
- PER-2009-0150 FE - FG Sample Point TSR Violation .doc
- RE PER-2009-0150 FE on TSR Violation for FG Samplings in AW-Farm vs. LCO 3.2.1.msg
- Vapor probe drawing.pdf
- WRPS-PER-2009-0150 CLOSURE TF-OPS-IHT-001_B0_IHT_Flammable_Gas_Surveillances_on_Double_Shell_Tanks.doc
- WRPS-PER-2009-0150.1 CLOSURE AN & AP FARM ECN-726360-R0.pdf
- WRPS-PER-2009-0150.1 CLOSURE AW FARM ECN-726352-R0.pdf
- WRPS-PER-2009-0150.1 CLOSURE AY FARM ECN-726357-R0.pdf
- WRPS-PER-2009-0150.1 CLOSURE AZ FARM ECN-726358-R0.pdf
- WRPS-PER-2009-0150.1 CLOSURE GENERAL ECN-726356-R0.pdf
- WRPS-PER-2009-0150.1 CLOSURE SY FARM ECN-726359-R0.pdf
- WRPS-PER-2009-0150_CLOSURE_WHY_STAIRCASE_05-06-09.doc

Actionee	Action Due Date	E-STARS Number
Brooks, Rocky L	11/18/2009	WRPS-PER-2009-0150.2

Action

In accordance with the ECN(s) provided in action 1 of this PER, change the currently used sample locations, where necessary, so that the lower gas sample port will be the standard port at all DSTs with MITs, and the ¼ in. sample tube will be the standard port for all DSTs with vapor probes.

Deliverable - Copy of completed work package.

Corrective Action Attachments

- e-mail that corrects PER statements.pdf
- Link to PER
- P1010157.JPG
- P1260077.JPG
- PER-2009-0150 FE - FG Sample Point TSR Violation .doc
- RE PER-2009-0150 FE on TSR Violation for FG Samplings in AW-Farm vs. LCO 3.2.1.msg
- Vapor probe drawing.pdf
- WRPS-PER-2009-0150 CLOSURE TF-OPS-IHT-001_B0_IHT_Flammable_Gas_Surveillances_on_Double_Shell_Tanks.doc
- WRPS-PER-2009-0150_CLOSURE_WHY_STAIRCASE_05-06-09.doc

Actionee	Action Due Date	E-STARS Number
Nicholson, Robert s (Bob)	12/10/2009	WRPS-PER-2009-0150.3

Action

Update procedure TF-OPS-IHT-001 wait time information accordingly for affected tank farms when the design change is made to use only the smaller ¼" tubes.

Deliverable - Copy of revised procedure.

Corrective Action Attachments

- e-mail that corrects PER statements.pdf
- Link to PER
- P1010157.JPG
- P1260077.JPG
- PER-2009-0150 FE - FG Sample Point TSR Violation .doc
- RE PER-2009-0150 FE on TSR Violation for FG Samplings in AW-Farm vs. LCO 3.2.1.msg
- Vapor probe drawing.pdf
- WRPS-PER-2009-0150 CLOSURE TF-OPS-IHT-001_B0_IHT_Flammable_Gas_Surveillances_on_Double_Shell_Tanks.doc
- WRPS-PER-2009-0150_CLOSURE_WHY_STAIRCASE_05-06-09.doc

ATTACHMENTS

e-mail that corrects PER statements.pdf

Link to PER

P1010157.JPG

P1260077.JPG

PER-2009-0150 FE - FG Sample Point TSR Violation .doc

RE PER-2009-0150 FE on TSR Violation for FG Samplings in AW-Farm vs. LCO 3.2.1.msg

Vapor probe drawing.pdf

WRPS-PER-2009-0150 CLOSURE TF-OPS-IHT-001_B0_IHT_Flammable_Gas_Surveillances_on_Double_Shell_Tanks.doc

WRPS-PER-2009-0150_CLOSURE_WHY_STAIRCASE_05-06-09.doc

AUDIT HISTORY

Change Date	Auditor	Comments
01/28/2009 07:03	Anderson, Craig E	PAAA Screening Changed
01/28/2009 15:02	Brown, Nancy L	'PER Screening Comments' was changed.
01/29/2009 13:46	Brown, Nancy L	'Screening Safety Managemnt Program' was changed. 'PER Significance Level' was changed from PER with Resolution to Further Evaluation. 'Assigned Responsible Manager' was changed. 'PER Screening Comments' was changed.
01/30/2009 08:20	Brown, Nancy L	Responsible Manager Task Launched by Brown, Nancy L
02/05/2009 08:58	Owen, Annette	'PER Screening Comments' was changed.
02/05/2009 16:21	Brown, Nancy L	'PER Screening Comments' was changed.
02/09/2009 13:23	Brown, Nancy L	'Screening Safety Managemnt Program' was changed. 'PER Significance Level' was changed from Further Evaluation to PER with Resolution. 'Assigned Responsible Manager' was changed. 'PER Screening Comments' was changed. 'Functional Area' was changed. 'ISMS' was changed. 'Selected Work Processes' have changed. 'Selected Consequence Codes' have changed.
02/10/2009 08:37	Owen, Annette	'TF Operations Morning Leadership Call' was changed. 'Instructions for Responsible Manager' was changed.
02/11/2009 07:02	Anderson, Craig E	PAAA Screening Changed
05/08/2009 08:49	Bragg, David A	'Remedial Corrective Action' was changed.
05/18/2009 15:04	Glaman, Linda R	Corrective actions Launched by Glaman, Linda R

-- End of Report --
08/06/2009 09:55 AM

Task# WRPS-PER-2009-0150

E-STARS[R] Report
Task Detail Report
08/06/2009 0956

TASK INFORMATION			
Task#	WRPS-PER-2009-0150		
Subject	RES; Vapor sample probes		
Parent Task#		**Status**	Open
Reference		**Due**	12/20/2009
Originator	^PER Coordinator	**Priority**	Medium
Originator Phone		**Category**	PER
Origination Date	01/26/2009 0947	**Generic1**	None
Remote Task#		**Generic2**	None
Deliverable	PER Review	**Generic3**	None
Class	None	**View Permissions**	Global
Instructions	*No Instructions*		

ROUTING LISTS

1	Corrective actions Routing Lis	Active
	To launch Corrective actions.	
	• ^PER CAs - Assign - Awaiting Response - Due Date - 12/20/2009 0000 *Instructions:*	
2	Responsible Manager	Inactive
	Perform a technical review of the resolution	
	• Eppler, Larry L - Assign - Completed with comments - 02/04/2009 1643 *Instructions:*	
	• ^PER Screening(Brown, Nancy L) - Assign - Completed - 02/09/2009 1325 *Instructions:*	
	• ^Mgr Review(Owen, Annette) - Review - Concur - 02/10/2009 0837 *Instructions:*	
	• Knight, Mark A - Assign - Completed with comments - 05/07/2009 1157 *Instructions:* ↳ *Routing List:* Route List - Inactive *Instructions:* • Nicholson, Robert s (Bob) - Assign - Completed with comments - 05/07/2009 0633	
	• ^Independent Assessment Review(Penick, Lee R) - Review - Concur - 05/18/2009 0857 *Instructions:*	
3	Review Initial PER	Inactive
	Review New PER	
	• ^SO(Johnson, Brian A) - Review - Concur - 01/26/2009 1006 *Instructions:*	
	• ^PER Screening(Brown, Nancy L) - Review - Concur - 01/27/2009 1430 *Instructions:*	
	• ^Mgr Review - Review - Withdrawn - 01/28/2009 1503 *Instructions:*	

Task# WRPS-PER-2009-0150

	• ^PER Screening(Brown, Nancy L) - Assign - Completed - 01/29/2009 1347 *Instructions:*
	• ^Mgr Review - Assign - Cancelled - 01/30/2009 0820 *Instructions:*
ATTACHMENTS	
Attachments	1. e-mail that corrects PER statements.pdf 2. Link to PER 3. P1010157.JPG 4. P1260077.JPG 5. PER-2009-0150 FE - FG Sample Point TSR Violation .doc 6. RE PER-2009-0150 FE on TSR Violation for FG Samplings in AW-Farm vs. LCO 3.2.1.msg 7. Vapor probe drawing.pdf 8. WRPS-PER-2009-0150 CLOSURE TF-OPS-IHT-001_B0_IHT_Flammable_Gas_Surveillances_on_Double_Shell_Tanks.doc 9. WRPS-PER-2009-0150_CLOSURE_WHY_STAIRCASE_05-06-09.doc
COMMENTS	
Poster	Williams, Char - 02/04/2009 1638
	Evaluation - JM Grigsby
	PER-2009-0150 Further Evaluation – does the described condition represent a TSR violation? Conclusion: The described condition of flammable gas sample locations does not represent a TSR violation because: 1. The sampling locations in AW Farm (that are less than 3-ft below the riser) do provide representative samples of the tank headspace for steady-state flammable gas accumulation hazards. 2. Representative samples meet the TSR LCO 3.2.1 SR requirement as described in the Bases to LCO 3.2.1 Bases: Condition: Several flammable gas monitoring points in AW Farm DST risers do not meet the requirements in TFC-ESHQ-FP-STD-05: • At a location at least three feet below the bottom of a riser (may be through a Standard Hydrogen Monitoring System (SHMS) probe or Multi-Functional Instrument Tree (MIT) middle or lower gas sample port) Sampling points are at least 1.4 ft below the bottom of the riser (but less than 3 ft below the bottom of the riser) with one exception. AW-105 has the monitoring point 0.01 ft (approximately 1/8-in) up the riser. The sampling point risers are sealed against incoming air (see e-mail from Nicholson, Robert S (Bob) to Grigsby, J M (Mike); Eppler, Larry L; Knight, Mark A dated Mon 2/2/2009 12:11 PM) Technical evaluation: The requirements for monitoring actively ventilated tanks in TFC-ESHQ-FP-STD-05 (i.e., least three feet below the bottom of a riser) provide for representative sampling including the consideration for sampling through unsealed (e.g., open) risers, monitoring relatively rapid flammable gas concentration transients (e.g., gas release events), and representative sampling even if air is introduced down the sample line during sampling set-up, provided that the sample line is purged prior to taking a FG reading. In the case of FG monitoring in sealed risers relative to LCO 3.2.1 surveillance requirements, RPP-19013, Measuring Headspace Flammability Through Tank Risers, evaluated flammable gas sampling locations for DSTs. The evaluation concluded that samples from a sealed riser are representative of the tank headspace relative to gas concentrations that can change at most only slowly. This would be applicable to samples that reflect possible degraded tank ventilation that results in steady state flammable gas accumulation, where the concentration increase of concern would be over a period of at least 10 days (the LCO 3.2.1 SR frequency for 241-AW DSTs (SR 3.2.1.5). RPP-19013 concludes that the DST headspace is well mixed (no significant concentration gradients) and that gas diffusion will equilibrate the concentration in the riser with that in the tank headspace over a relatively short period of time (depends on the length of the riser that the gas must diffuse through). For example, for a sample point 5 ft up the riser, if the headspace concentration changed significantly, the sample point would be at 90% of the new concentration within about 10 hours. The headspace concentration due to steady state accumulation can not change rapidly so this is a conservative example. Note that the diffusion behavior is not affected by whether the tank is on active ventilation or passive ventilation (but the riser must be sealed against incoming fresh air that would dilute the concentration in the riser). The sample point not in the headspace is only 0.01 ft up the riser. As such samples from within this sealed riser are concluded to be representative of the tank headspace.

Task# WRPS-PER-2009-0150

	There is a possibility of air entering the sample lines when the sample line isolation valve is opened. Because the sample locations are all in the tank headspace or nearly so, this incoming air would be swept up and well mixed in the tank headspace in a short period of time and will not adversely affect representative sampling. TSR requirements: LCO 3.2.1 SR requirement - "VERIFY the flammable gas concentration is ? 25% of the LFL in the tank headspace." Bases to LCO 3.2.1 - "VERIFICATION that the tank headspace flammable gas concentration is maintained below 25% of the LFL provides the necessary assurance that the ventilation system is providing adequate flow through each of the tanks and that safe conditions are maintained. For controls that require VERIFICATION that the flammable gas concentration is ? 25% of the LFL in the tank headspace, flammable gas sampling or monitoring is required in the tank headspace or in a location where the flammable gas sampling or monitoring method ensures a representative measurement of the tank headspace flammable gas concentration." TFC-ESHQ-FP-STD-05 Requirements: Actively Ventilated Tanks Flammable gas monitoring for actively ventilated tanks shall be performed in the tank headspace by monitoring in one of the following locations: • At a location at least three feet below the bottom of a riser (may be through a Standard Hydrogen Monitoring System (SHMS) probe or Multi-Functional Instrument Tree (MIT) middle or lower gas sample port) • In the exhaust ventilation system up to the suction side of the first mixing point for a tank exhausted through a common header • In the exhaust ventilation system up to the discharge location for a tank that has a dedicated ventilation exhaust system. Passively Ventilated Tanks Flammable gas monitoring for passively ventilated tanks shall be performed by monitoring in one of the following locations: • The tank headspace at a location at least 3 feet below the bottom of a riser (may be through a SHMS probe or MIT middle or lower gas sample port) • For passively ventilated tanks with no induced gas release event hazard present, an alternative location may be used provided flammable gas monitoring ensures a representative [sample] of the flammable gas concentration in the tank headspace. ? Inside a sealed riser through a sealed connection such as an Enraf flush port which utilizes quick-disconnect plugs with a positive shutoff valve. ? At another location as evaluated by Industrial Safety and Hygiene and approved in accordance with Section 3.2.3.
Poster	Eppler, Larry L (Williams, Char) - 02/04/2009 1643
	Completed
	The described condition of flammable gas sample locations does not represent a TSR violation because: 1. The sampling locations in AW Farm (that are less than 3-ft below the riser) do provide representative samples of the tank headspace for steady-state flammable gas accumulation hazards. 2. Representative samples meet the TSR LCO 3.2.1 SR requirement as described in the Bases to LCO 3.2.1 Close PER/ESTARs action.
Poster	^PER Coordinator (Owen, Annette) - 03/17/2009 0736
	1st extension to 5/5/09 per form A-6003-227. (NO CAS)
	Additional time is required due to the need to support the evaporator campaign and pre-startup activities. This includes resolution of the water in the AW farm air lines and its impacts to the various farm instrumentation required for the evaporator campaign. Mark Roberts for M Knight
Poster	Nicholson, Robert s (Bob) (Bragg, David A) - 05/07/2009 0633
	Completed

Task# WRPS-PER-2009-0150

	Engineering has evaluated the issue identified in this PER and will launch 3 corrective actions for its resolution. The PER originator was involved in the disposition and concurs with the path forward.				
Poster	Knight, Mark A (Bragg, David A) - 05/07/2009 1157				
	Completed				
	Engineering has evaluated the issue identified in this PER and will launch 3 corrective actions for its resolution. The PER originator was involved in the disposition and concurs with the path forward.				
TASK DUE DATE HISTORY					
Modified	05/18/2009 1504 - ^PER Coordinator			**New Due Date**	12/20/2009 0000
Modified	03/17/2009 0734 - ^PER Coordinator (Owen, Annette)			**New Due Date**	05/05/2009 1630
Modified	02/10/2009 0838 - ^PER Coordinator (Owen, Annette)			**New Due Date**	03/27/2009 1630
Modified	01/30/2009 0820 - ^PER Coordinator			**New Due Date**	02/06/2009 1630
Modified	01/30/2009 0820 - ^PER Coordinator			**New Due Date**	02/06/2009 1630
Modified	01/26/2009 0947 - ^PER Coordinator			**New Due Date**	01/28/2009 1630
SUB TASK HISTORY					
Subtask#	WRPS-PER-2009-0150.1				
Subject	WRPS-PER-2009-0150; RES; Prepare ECN(s) to correct facility drawings for the following: To document that metal caps have been removed and replaced				
Originator	^PER CAs				
	Routing List	*No Active Routing List*			
Subtask#	WRPS-PER-2009-0150.2				
Subject	WRPS-PER-2009-0150; RES; In accordance with the ECN(s) provided in action 1 of this PER, change the currently used sample locations, where necessary,				
Originator	^PER CAs				
	Routing List	Corrective Action			
		Assignee	Brooks, Rocky L	**Response**	
		Assignee	Knight, Mark A	**Response**	
Subtask#	WRPS-PER-2009-0150.3				
Subject	WRPS-PER-2009-0150; RES; Update procedure TF-OPS-IHT-001 wait time information accordingly for affected tank farms when the design change is made to u				
Originator	^PER CAs				
	Routing List	Corrective Action			
		Assignee	Nicholson, Robert s (Bob)	**Response**	
		Assignee	Knight, Mark A	**Response**	

-- end of report --

Nicholson, Robert S (Bob)

From: Nicholson, Robert S (Bob)

Sent: Wednesday, January 28, 2009 10:54 AM

To: Kripps, Lawrence J; Brown, Nancy L; Anderson, Craig E; Harty, W M Jr (Mike); Owen, Peter L; Strasser, David W; Roueche', Kimberly A

Subject: AW Farm gas sample points

On 1/26/09, I originated WRPS-PER-2009-0150.

This PER incorrectly stated that Procedure TF-OPS-IHT-001 calls out sample tubes on the AW Farm vapor probes that terminate just below the riser flanges.

Drawing H-14-102410 shows that the sample tubes on the AW Farm vapor probes that are called out in this procedure actually terminate 13 feet below the riser flange.

Therefore, these sample tubes terminate at the following levels relative to the tank dome:

AW Farm tanks 102, 103, 104, and 106: 1.41 feet below the tank dome.

105-AW: 0.01 feet above the tank dome.

Tank 101-AW has an MIT. Procedure TF-OPS-IHT-001 specifies V-140. This is the middle gas sample port on the MIT, and it is located 2.34 feet below the dome.

I believe that these points would provide good representative samples for the tank dome space.

The requirement in Procedure TFC-ESHQ-FP-STD-05 for drawing a sample from 3 feet below the dome was probably selected with activities in mind that involved taking a sample from the riser where work was being performed. A point 1.41 feet into the dome space below an open riser would not give a representative sample because it would be mostly air coming down the riser. This would not be a problem with a MIT or vapor probe.

I apologize for the inconvenience this caused.

- Robert Nicholson

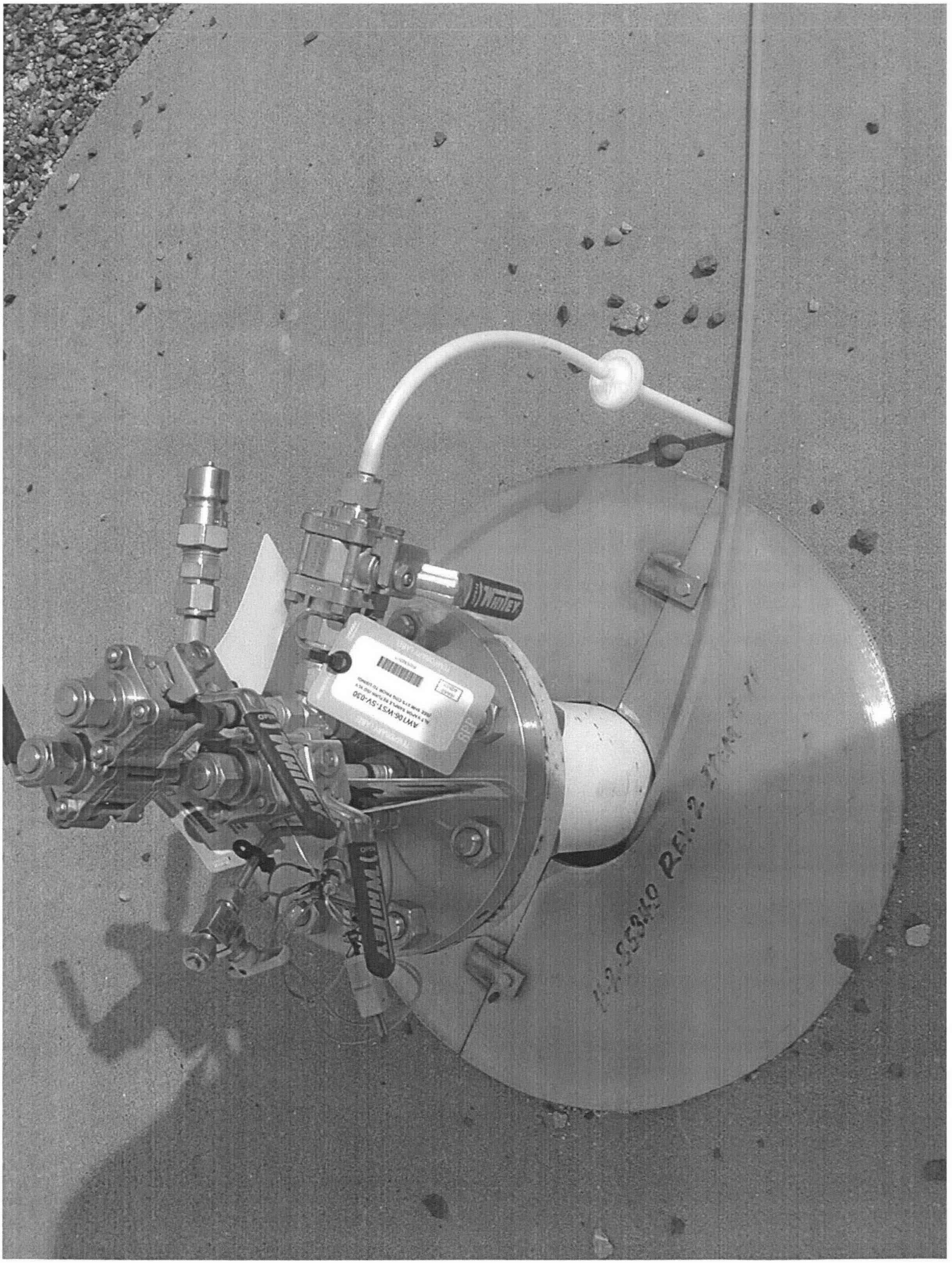
AW106-WST-SV-030
WHITEY
REV. 2

WHILEY
OPEN
AN102-WST-SV-028
LOCAL VAPOR SAMPLE ISO VALVE
(SEE SHM SYS COG PRIOR TO USING)
S019G3WT

PER-2009-0150

Further Evaluation – does the described condition represent a TSR violation?

Conclusion: The described condition of flammable gas sample locations does not represent a TSR violation because:

1. The sampling locations in AW Farm (that are less than 3-ft below the riser) do provide representative samples of the tank headspace for steady-state flammable gas accumulation hazards.
2. Representative samples meet the TSR LCO 3.2.1 SR requirement as described in the Bases to LCO 3.2.1

Bases:

Condition: Several flammable gas monitoring points in AW Farm DST risers do not meet the requirements in TFC-ESHQ-FP-STD-05:

- At a location at least three feet below the bottom of a riser (may be through a Standard Hydrogen Monitoring System (SHMS) probe or Multi-Functional Instrument Tree (MIT) middle or lower gas sample port)

Sampling points are at least 1.4 ft below the bottom of the riser (but less than 3 ft below the bottom of the riser) with one exception. AW-105 has the monitoring point 0.01 ft (approximately 1/8-in) up the riser. The sampling point risers are sealed against incoming air (see e-mail from Nicholson, Robert S (Bob) to Grigsby, J M (Mike); Eppler, Larry L; Knight, Mark A dated Mon 2/2/2009 12:11 PM)

Technical evaluation: The requirements for monitoring actively ventilated tanks in TFC-ESHQ-FP-STD-05 (i.e., least three feet below the bottom of a riser) provide for representative sampling including the consideration for sampling through unsealed (e.g., open) risers, monitoring relatively rapid flammable gas concentration transients (e.g., gas release events), and representative sampling even if air is introduced down the sample line during sampling set-up, provided that the sample line is purged prior to taking a FG reading.

In the case of FG monitoring in sealed risers relative to LCO 3.2.1 surveillance requirements, RPP-19013, *Measuring Headspace Flammability Through Tank Risers,* evaluated flammable gas sampling locations for DSTs. The evaluation concluded that samples from a sealed riser are representative of the tank headspace relative to gas concentrations that can change at most only slowly. This would be applicable to samples that reflect possible degraded tank ventilation that results in steady state flammable gas accumulation, where the concentration increase of concern would be over a period of at least 10 days (the LCO 3.2.1 SR frequency for 241-AW DSTs (SR 3.2.1.5). RPP-19013

concludes that the DST headspace is well mixed (no significant concentration gradients) and that gas diffusion will equilibrate the concentration in the riser with that in the tank headspace over a relatively short period of time (depends on the length of the riser that the gas must diffuse through). For example, for a sample point 5 ft up the riser, if the headspace concentration changed significantly, the sample point would be at 90% of the new concentration within about 10 hours. The headspace concentration due to steady state accumulation can not change rapidly so this is a conservative example. Note that the diffusion behavior is not affected by whether the tank is on active ventilation or passive ventilation (but the riser must be sealed against incoming fresh air that would dilute the concentration in the riser). The sample point not in the headspace is only 0.01 ft up the riser. As such samples from within this sealed riser are concluded to be representative of the tank headspace.

There is a possibility of air entering the sample lines when the sample line isolation valve is opened. Because the sample locations are all in the tank headspace or nearly so, this incoming air would be swept up and well mixed in the tank headspace in a short period of time and will not adversely affect representative sampling.

TSR requirements:

LCO 3.2.1 SR requirement - "VERIFY the flammable gas concentration is $\leq$ 25% of the LFL in the tank headspace."

Bases to LCO 3.2.1 - "VERIFICATION that the tank headspace flammable gas concentration is maintained below 25% of the LFL provides the necessary assurance that the ventilation system is providing adequate flow through each of the tanks and that safe conditions are maintained.

For controls that require VERIFICATION that the flammable gas concentration is $\leq$ 25% of the LFL in the tank headspace, flammable gas sampling or monitoring is required in the tank headspace or in a location where the flammable gas sampling or monitoring method ensures a representative measurement of the tank headspace flammable gas concentration."

TFC-ESHQ-FP-STD-05 Requirements:

Actively Ventilated Tanks

Flammable gas monitoring for actively ventilated tanks shall be performed in the tank headspace by monitoring in one of the following locations:

- At a location at least three feet below the bottom of a riser (may be through a Standard Hydrogen Monitoring System (SHMS) probe or Multi-Functional Instrument Tree (MIT) middle or lower gas sample port)
- In the exhaust ventilation system up to the suction side of the first mixing point for a tank exhausted through a common header

- In the exhaust ventilation system up to the discharge location for a tank that has a dedicated ventilation exhaust system.

Passively Ventilated Tanks

Flammable gas monitoring for passively ventilated tanks shall be performed by monitoring in one of the following locations:

- The tank headspace at a location at least 3 feet below the bottom of a riser (may be through a SHMS probe or MIT middle or lower gas sample port)
- For passively ventilated tanks with no induced gas release event hazard present, an alternative location may be used provided flammable gas monitoring ensures a representative [sample] of the flammable gas concentration in the tank headspace.
  - Inside a sealed riser through a sealed connection such as an Enraf flush port which utilizes quick-disconnect plugs with a positive shutoff valve.
  - At another location as evaluated by Industrial Safety and Hygiene and approved in accordance with Section 3.2.3.

Message

From: Nicholson, Robert S (Bob)
Sent: Monday, February 02, 2009 12:11 PM
To: Grigsby, J M (Mike); Eppler, Larry L; Knight, Mark A
Cc: Kripps, Lawrence J
Subject: RE: PER-2009-0150 FE on TSR Violation for FG Samplings in AW-Farm vs. LCO 3.2.1

The MIT and vapor sample probe risers are sealed. There could be air flow down a sample line if the hand held monitor is not connected and the isolation valve is open. However, there is no air flow down the riser if the isolation valve is closed or a hand held instrument is connected and drawing a sample.

- Robert Nicholson

From: Grigsby, J M (Mike)
Sent: Friday, January 30, 2009 2:18 PM
To: Eppler, Larry L; Knight, Mark A; Nicholson, Robert S (Bob)
Cc: Kripps, Lawrence J
Subject: PER-2009-0150 FE on TSR Violation for FG Samplings in AW-Farm vs. LCO 3.2.1
Importance: High

The evaluation cannot be completed without knowing if the risers are sealed (i.e., prevent fresh air flow into the riser that would dilute the sample location). If the risers are not sealed the sample location would need to be per TFC-ESHQ-FP-05, i.e., 3-ft into the tank headspace.

Please provided the sealed riser evaluation results ASAP so this PER FE can be completed by NS (I don't see the due date on the PER but FEs require response within 7 days so I would guess NS needs to respond no later than 2/9/09.

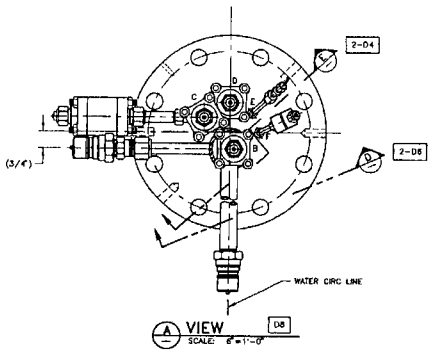

A VIEW D8
SCALE: 6"=1'-0"

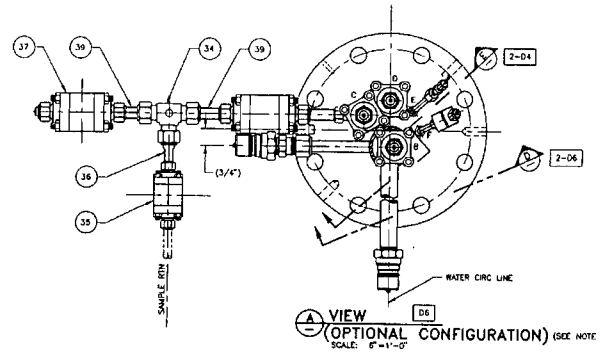

A VIEW D6
(OPTIONAL CONFIGURATION) (SEE NOTE 13)
SCALE: 6"=1'-0"

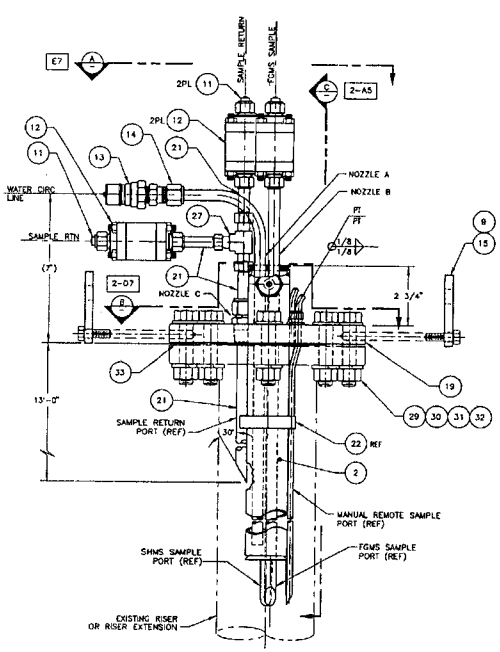

1 MULTI-PURPOSE PROBE ASSEMBLY
SCALE: 6"=1'-0"

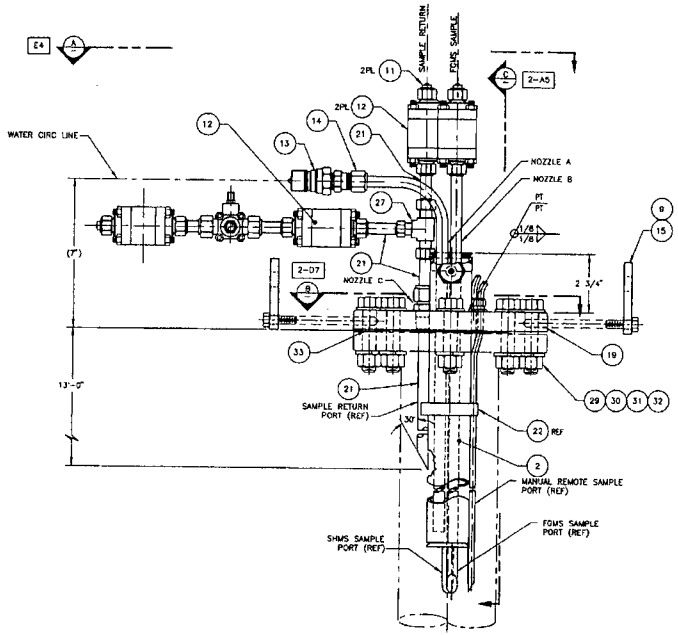

1 MULTI-PURPOSE PROBE ASSEMBLY
(OPTIONAL CONFIGURATION) (SEE NOTE 13)
SCALE: 6"=1'-0"

PARTS/MATERIAL LIST

	QTY REQD	-010	PART/DASH NUMBER	NOMENCLATURE/DESCRIPTION	MATERIAL/REFERENCE	SHEET	ITEM NO
		X	-010	MULTI-PURPOSE PROBE ASSEMBLY		1	1
		1	-020	VAPOR TUBE PIPE ASSEMBLY		2	2
							3
							4
		1	AFELOAF99QUK03X-19FEET	THERMOCOUPLE	WATLOW GORDON		5
		AR		TUBING, 1/4" OD X .035 WALL	ASTM A269 GR TP 304 ANNEALED & PICKLED		6
		AR	SS-400-6	UNION, 1/4"	SWAGELOK		7
		2	-004	CONNECTOR, MALE 1/4" NPT X 1/4" TUBE ALTERED FROM SWAGELOK #SS-400-1-4		2	8
	2	2		SCREW, HWY HEX HD, 3/8-16UNC-2A X 1 1/4"L	ASTM A193 GR B8 304SST		9
		1	SS-400-6-1	REDUCING UNION 1/4" TUBE X 1/16" TUBE	SWAGELOK		10
		4	SS-810-P	PLUG, 1/2"	SWAGELOK		11
		4	SS-63TS8	VALVE, 1/2" BALL	WHITEY		12
		2	SH4-83	NIPPLE, 1/2" QUICK COUPLING	PARKER		13
		1	SS-810-1-8	CONNECTOR, MALE, 1/2" NPT x 1/2" TUBE	SWAGELOK		14
	2	2	-001	LIFT LUG, PL, 1 3/4" X 3/8" THK	ASTM A240 GR TP304L SST	2	15
		1	SS-42S4	VALVE, 1/4" BALL	WHITEY		16
		2	-005	CONNECTOR, MALE 3/4" NPT X 1/2" TUBE ALTERED FROM SWAGELOK #SS-810-1-12		2	17
		AR	SS-810-8	UNION, 1/2"	SWAGELOK		18
		1	-006	FLANGE, 4" BLIND, RF, CLASS 150	ASTM A182 GR F 304L SST	2	19
	AR			TUBING, 1/2" OD x .065 WALL	ASTM A269 GR TP 304 ANNEALED & PICKLED		20
		AR		TUBING, 1/2" OD X .035 WALL	ASTM A269 GR TP 304 ANNEALED & PICKLED		21
		AR	PN 585	HOSE CLAMP	NAFLO		22
	AR			PIPE, 1 1/2" SCH 40S	ASTM A312 TP 304L SMLS		23
	1		-002	END CAP, TOP, PL, 1/4" THK	ASTM A240 GR TP304L SST	2	24
	1		-003	END CAP, BOTTOM, PL, 1/4" THK	ASTM A240 GR TP304L SST	2	25
	AR			PIPE, 1/2" SCH 40S	ASTM A312 TP 304L SMLS		26
		1	SS-810-3	UNION TEE, 1/2"	SWAGELOK		27
		1	SS-400-P	PLUG, 1/4"	SWAGELOK		28
		AR		SCREW, CAP, HWY HEX HD, 5/8-11UNC-2A X 3"L PER ANSI/ASME B18.2.1	ASTM A193 GR B8 304SST		29
		AR		NUT, HWY HEX, 5/8-11UNC-2B PER ANSI/ASME B18.2.2	ASTM A194 GR 8F 304SST		30
		AR		WASHER, LOCK, REG HELICAL SPRING, 5/8" PER ANSI/ASME B18.21.1	ANY GR STAINLESS STEEL		31
		AR		WASHER, PLAIN, 5/8", TYPE A, NARROW PER ANSI/ASME B18.22.1	ANY GR STAINLESS STEEL		32
		AR		GASKET, GARLOCK 3000 X 1/16" THK	GARLOCK		33
13		1	SS-810-3	UNION TEE, 1/2"	SWAGELOK		34
13		1	SS-62TS4-JK	VALVE, BALL, 3/8", OVAL HANDLE	WHITEY		35
13		1	SS-811-PC-6	REDUCING PORT CONNECTOR, 1/2" X 3/8" TUBE	SWAGELOK		36
13		1	SS-63TS8	VALVE, BALL, 1/2", OVAL HANDLE	WHITEY		37
13		1	SS-810-P	PLUG, 1/2"	SWAGELOK		38
13		1		TUBING, 1/2" OD X .065 WALL	ASTM A213 OR A269 GR 304 OR 304L		39

FOR GENERAL NOTES, SEE SHEET 2

DWG NO	TITLE	REF NUMBER	TITLE
DRAWING TRACEABILITY LIST	REFERENCES	NEXT USED ON H-2-85268	

REV	DESCRIPTION	REVISIONS
S 1	REVISED PER ECN 643521	KSO 8/97

CADFILE H102410A CADCODE WIN95:ACD2:12.0:SS

Karen Diener 8/1/97
RN Kyle 7/28/97
HL Humphrey 8/27/97
MF Erhart 7/7/97
Dean Anh, DA Brockmann
R. Jeff, KE Carpenter

U.S. DEPARTMENT OF ENERGY
Richland Operations Office
LOCKHEED MARTIN HANFORD CORP.

MULTI-PURPOSE PROBE

F 241-U 4600 H-14-102410 1
SCALE SHOWN 607813 SHEET 1 OF 3

2 PLOT SCALE: 1-2

Double click to change COPY type

IHT Flammable Gas Surveillances on Double Shell Tanks

PCA Incorporated:	TF-2009-0269
Procedure Signatures for:	TF-OPS-IHT-001, B-0
Type of Change:	Periodic review PCA
Review Designator:	E R
USQ Screening Number:	TF-09-0594-S, Rev. 0

POSITION/ORG	DELEGATE	DATE
IHT/BO	Alan J. Wilhelm	04/09/2009
Env. Spec/Env	John D. Guberski	04/10/2009
HP/BO RadCon	Jeff Marks	04/09/2009
BOSM	M. Garrett	04/10/2009
Eng/DSTSE	Robert Nicholson	04/09/2009
Technical Writer	WF White	04/10/2009
Approval Authority	M. Garrett	04/10/2009

Justification:
All changes are as a result of the periodic review process.

Summary of Changes:
Globally formatted LIMITs to current format. Added new sample ports to Tables 1 through 6. Added NOTEs to Tables 1 through 6.

Next Periodic Review Date — 04/10/2012

The following organization(s) have determined their need to review this procedure at the next periodic review cycle: Technical Authority, Safety, Environmental, and Radiological Control.

Not for Field Use

Table of Contents

Page

1.0 PURPOSE AND SCOPE 3
1.1 Purpose 3
1.2 Scope 3
2.0 INFORMATION 3
3.0 PRECAUTIONS AND LIMITATIONS 3
3.1 Radiation and Contamination Control 3
3.2 Limits 3
4.0 PREREQUISITES 4
4.1 Special Tools, Equipment, and Supplies 4
4.2 Performance Documents 4
4.3 Field Preparations 4
5.0 PROCEDURE 5
5.1 Perform Flammable Gas Surveys 5
5.2 Records 7
Data Sheet 1: Instrument and Calibration Information 8
Table 1 – 241-AN Tank Farm 9
Table 2 – 241-AP Tank Farm 11
Table 3 – 241-AW Tank Farm 13
Table 4 – 241-AY Tank Farm 15
Table 5 – 241-AZ Tank Farm 17
Table 6 – 241-SY Tank Farm 18

Not for Field Use

1.0 PURPOSE AND SCOPE

1.1 Purpose

This procedure provides instructions for an Industrial Hygienist Technician performing flammable gas surveys in the DST Farms to meet the requirements of HNF-SD-WM-TSR-006, Limiting Condition of Operation (LCO) 3.2.1 Surveillance Requirements 3.2.1.1 through 3.2.1.6.

1.2 Scope

This procedure is to obtain flammable gas readings in each of the DSTs as required by LCO 3.2.1.

2.0 INFORMATION

None

3.0 PRECAUTIONS AND LIMITATIONS

3.1 Radiation and Contamination Control

3.1.1 When performed without a work package, this procedure is limited to radiological areas and work activities permitted by a general radiological work permit.

3.1.2 When work is performed in or when work will result in a high contamination, high radiation, or an airborne radioactivity area, then an approved work package must be developed which is reviewed by Radiological Control per ALARA Work Planning procedure TFC-ESHQ-RP-RWP-C-03.

3.2 Limits

HNF-SD-WM-TSR-006, Tank Farms Technical Safety Requirements.

LCO 3.2.1 DST Primary Ventilation Systems.

Not for Field Use

4.0 PREREQUISITES

4.1 Special Tools, Equipment, and Supplies

The following supplies may be needed to perform this procedure:

- Combustible Gas Meter.

4.2 Performance Documents

The following may be needed to perform this procedure:

- TFC-ESHQ-FP-STD-05, Flammable Gas Monitoring.

4.3 Field Preparations

Prior to going to the field, notify the Shift Manager and obtain permission prior to commencing surveys.

NOT for Field Use

5.0 PROCEDURE

5.1 Perform Flammable Gas Surveys

5.1.1 **OBTAIN** from Shift Manager which DST Farm(s) is/are to have flammable gas surveys (check all that apply).

	Check ✓		Check ✓
All of AN Farm	_____	All of AY Farm	_____
All of AP Farm	_____	All of AZ Farm	_____
All of AW Farm	_____	All of SY Farm	_____

Individual tanks within a farm _____

Shift Manager: _____ / _____
Signature Date

5.1.1.1 **IF** "Individual tanks within a farm" has been selected, **IDENTIFY** each of the tanks below:

_____
_____
_____
_____

5.1.2 **RECORD** instrument and calibration data on Data Sheet 1.

5.1.3 **PERFORM** flammable gas surveys per the appropriate table below for each tank in the DST tank farm(s) identified in Step 5.1.1 or the individual tanks identified in Step 5.1.1.1.

- Table 1 – 241-AN Tank Farm
- Table 2 – 241-AP Tank Farm
- Table 3 – 241-AW Tank Farm
- Table 4 – 241-AY Tank Farm
- Table 5 – 241-AZ Tank Farm
- Table 6 – 241-SY Tank Farm.

5.1.4 **RECORD** % LFL readings and the Date/Time taken in the appropriate table.

Not for Field Use

5.1 Perform Flammable Gas Surveys (Cont.)

~~Limit - LCO 3.2.1 — DST Primary Ventilation Systems~~

5.1.5 **IMMEDIATELY NOTIFY** Shift Manager for any readings >25 % LFL for evaluation of further actions for LCO 3.2.1. (LCO 3.2.1)

Formatted: Font: 12 pt, Not Bold

5.1.6 **NOTIFY** Shift Manager for any abnormal increases in % LFL levels even though they may be below 25%.

5.1.7 **RECORD** all deviations and/or discrepancies observed during the survey in the comment section of the appropriate table.

5.1.8 **RETURN** procedure to the Shift Manager when complete for review.

NOT for Field Use

5.2 Records

NOTE - The following records are generated during the performance of this procedure:

5.2.1 **VERIFY** the completed records have been submitted to the shift office for record retention.

_____ / _____ / _____
Signature Print Date

Record Description*	Vital Record Y/N	QA Record Y/N	QA Record Retention L/NP/NA	NARA Retention Schedule	Other Retention Requirements	Records Custodian
Step 5.1.1 and 5.2.1	N	Y	L	ADM-17.32A	N	Operations Organization
Data Sheet 1	N	Y	L	ADM-17.32A	N	Operations Organization
Table 1 through Table 6	N	Y	L	ADM-17.32A	N	Operations Organization

* The identified record custodian is responsible for record management in accordance with TFC-BSM-IRM_DC-C-02 or other applicable requirements.

NOT for use

Data Sheet 1: Instrument and Calibration Information

Instrument Information						
Instrument	Model	TWRS #	Calibration Expiration Date	Date		
Combustible Gas Meter (CGM)						
Pump				DRI #		

Calibration Information					Pre		Post	
Sensor	Span Value	Gas	Lot #	Expires	Time	Value	Time	Value
O_2	20.9%	Ambient Air	N/A	N/A				
LEL	25%	Isopentane						
Pump	Leak Check	N/A	N/A	N/A				

Comments:

Special Instructions:
Duplicate this table as needed.

NOT for Use

Table 1 – 241-AN Tank Farm

The following checks are to be performed within 72 hours of an inoperable primary DST Ventilation System or as directed by the Shift Manager.

For the multi-purpose probes, the sample tube is 0.18 in. ID. The lower gas sample tube on the multi-functional instrument tree is 0.305 in. ID. Assume the sample tubes extend 25 feet below the sample port when determining the time it takes for air to travel the length of the sample tube.

Tank	Location/Sample Valve	Riser #	Date/Time*	O_2%	LFL % Reading**
241-AN-101	Multi-Purpose Probe/ AN101-WST-SV-028 ~~(or available port)~~	022			
241-AN-102	Multi-Purpose Probe/ AN102-WST-SV-028	021			
241-AN-103	Multi-Functional Instrument Tree/AN103-WST-SV-103 (Lower gas sample port)	017			
241-AN-104	Multi-Functional Instrument Tree/AN104-WST-SV-103 (Lower gas sample port)	017			
241-AN-105	Multi-Functional Instrument Tree/AN105-WST-SV-103 (Lower gas sample port)	017			
241-AN-106	Multi-Purpose Probe/ AN106-WST-SV-028	021			
241-AN-107	Multi-Purpose Probe/ AN107-WST-SV-028	011			
		IHT Signature/Date			
		Shift Manager Review Signature/Date			
COMMENTS:					

~~* If the primary ventilation system is inoperable, flammable gas must be VERIFIED less than 25% LFL within 72 hours and once per 72 hour thereafter until ventilation is restored,~~

~~OR~~

~~IF flammable gas readings are being taken every 10 days as an alternate to the tank inlet high-efficiency particulate air (HEPA) filter differential pressure is > 0 inches w.g. for each of the tanks in the 241-AN tank farm (S.R. 3.2.1.1).~~* If the primary ventilation system is inoperable, flammable gas must be verified less than 25% LFL within 72 hours and once per 72 hour thereafter until ventilation is restored,

OR

If flammable gas readings are being taken every 10 days as an alternate to verifying tank inlet HEPA filter differential pressure is > 0 inches w.g. flammable gas must be verified less than 25% LFL for each of the tanks in the 241-AN tank farm within 10 days and within 10 days thereafter until ventilation is restored. (S.R. 3.2.1.1)

** IF flammable gas reading is ≥ 25 % LFL, NOTIFY the Shift Manager.

NOT for Field Use

Table 2 – 241-AP Tank Farm

The following checks are to be performed within 72 hours of an inoperable primary DST Ventilation System or as directed by the Shift Manager.

For the multi-purpose probes, the sample tube is 0.18 in. ID. Assume the sample tubes extend 25 feet below the sample port when determining the time it takes for air to travel the length of the sample tube.

Tank	Location/Sample Valve	Riser #	Date/Time*	O_2%	LFL % Reading**
241-AP-101	Multi-Purpose Probe/ AP101-WST-SV-028	017			
241-AP-102	Multi-Purpose Probe/ AP102-WST-SV-028	017			
241-AP-103	Multi-Purpose Probe/ AP103-WST-SV-028	028			
241-AP-104	Multi-Purpose Probe/ AP104-WST-SV-028	017			
241-AP-105	Multi-Purpose Probe/ AP105-WST-SV-028	017			
241-AP-106	Multi-Purpose Probe/ AP106-WST-SV-028	017			
241-AP-107	Multi-Purpose Probe/ AP107-WST-SV-028	017			
241-AP-108	Multi-Purpose Probe/ AP108-WST-SV-028	017			
	IHT Signature/Date				
	Shift Manager Review Signature/Date				

COMMENTS:

~~* If the primary ventilation system is inoperable, flammable gas must be VERIFIED less than 25% LFL within 72 hours and once per 72 hour thereafter until ventilation is restored.~~

~~OR~~

~~IF flammable gas readings are being taken every 10 days as an alternate to verifying the primary ventilation stack exhaust flow is > 200 ft^3/min (CFM) and the headspace in each tank is < 0.0 in. w.g. relative to atmospheric pressure in the 241-AP tank farm (S.R. 3.2.1.6).*~~ If the primary ventilation system is inoperable, flammable gas must be verified less than 25% LFL within 72 hours and once per 72 hour thereafter until ventilation is restored.

OR

If flammable gas readings are being taken every 10 days as an alternate to verifying the primary

NOT for Field Use

ventilation stack exhaust flow is > 200 ft^3/min (CFM) and the headspace in each tank is < 0.0 in. w.g. relative to atmospheric pressure in the 241-AP tank farm flammable gas must be verified less than 25% LFL for each of the tanks in the 241-AN tank farm within 10 days and within 10 days thereafter until ventilation is restored. (S.R. 3.2.1.6)

** IF flammable gas reading is ≥ 25 % LFL, NOTIFY the Shift Manager.

NOT for Field Use

Table 3 – 241-AW Tank Farm

The following checks are to be performed within 72 hours of an inoperable primary DST Ventilation System or as directed by Shift Manager.

For multi-purpose probes, sample tube at valve SV-028 is 0.18 in. ID. Lower gas sample tube on multi-functional instrument tree is 0.305 in. ID. Assume sample tubes extend 25 feet below sample port when determining time it takes for air to travel length of sample tube.

Tank	Location/Sample Valve/Alternate Sample Valve	Riser #	Date/Time*	O_2%	LFL % Reading**
241-AW-101	Multi-Functional Instrument Tree/AW101-WST-V-141 (Lower gas sample port)/ AW101-WST-V-140	017			
241-AW-102	Multi-Purpose Probe/ AW102-WST-SV-028/ AW102-WST-SV-030***	017			
241-AW-103	Multi-Purpose Probe/ AW103-WST-SV-028/ AW103-WST-SV-030***	011			
241-AW-104	Multi-Purpose Probe/ AW104-WST-SV-028/ AW104-WST-SV-030***	011			
241-AW-105	Multi-Purpose Probe/ AW105-WST-SV-028/ AW105-WST-SV-030***	011			
241-AW-106	Multi-Purpose Probe/ AW106-WST-SV-028/ AW106-WST-SV-030***	011			
	IHT Signature/Date				
	Shift Manager Review Signature/Date				

COMMENTS:

~~* If the primary ventilation system is inoperable, flammable gas must be VERIFIED less than 25% LFL within 72 hours and once per 72 hour thereafter until ventilation is restored,~~

~~OR~~

~~IF flammable gas readings are being performed to verify the primary ventilation system is operable as an alternate to tank inlet HEPA filter differential pressure readings, verify less than 25% LFL, every 10 days (S.R. 3.2.1.5).*~~ If primary ventilation system is inoperable, flammable gas must be verified less than 25% LFL within 72 hours and once per 72 hour thereafter until ventilation is restored,

OR

Not for Field Use

If flammable gas readings are being taken every 10 days as an alternate to verifying tank inlet HEPA filter differential pressure is > 0 inches w.g., flammable gas must be verified less than 25% LFL for each tank in 241-AW tank farm within 10 days and within 10 days thereafter until ventilation is restored. (S.R. 3.2.1.5)

** If flammable gas reading is ≥ 25 % LFL, notify Shift Manager.

*** Sample tubes at valves SV-030 on multi-purpose probes are 0.43 inches ID. Sample tube length is assumed to be 25 feet long. Required purge time is 5 sec per foot PLUS any additional instrument response time.

NOT for Field Use

Table 4 – 241-AY Tank Farm

The following checks are to be performed within 72 hours of an inoperable primary DST Ventilation System or as directed by the Shift Manager.

For the multi-purpose probes. the sample tube at valve SV-028 is 0.18 in. ID. Assume the sample tubes extend 25 feet below the sample port when determining the time it takes for air to travel the length of the sample tube.

Tank	Location/Sample Valve/Alternate Sample Valve	Riser #	Date/Time*	O_2%	LFL % Reading**
241-AY-101	Multi-Purpose Probe/ AY101-WST-SV-028/ AY101-WST-SV-029***	053			
241-AY-102	Multi-Purpose Probe/ AY102-WST-SV-028/ AY102-WST-SV-029***	053			
IHT Signature/Date					
Shift Manager Review Signature/Date					
COMMENTS:					

~~* If the primary ventilation system is inoperable, flammable gas must be VERIFIED less than 25% LFL within 72 hours and once per 72 hour thereafter until ventilation is restored,~~

~~OR~~

~~IF flammable gas readings are being taken every 5 days as an alternate to verifying the airflow through each tank is ≥ 5 ft³/min (CFM) in the 241-AY tank farm (S.R. 3.2.1.4).~~* If the primary ventilation system is inoperable, flammable gas must be verified less than 25% LFL within 72 hours and once per 72 hour thereafter until ventilation is restored,

OR

If flammable gas readings are being taken every 5 days as an alternate to verifying the primary ventilation stack exhaust flow is > 5 ft^3/min (CFM) in the 241-AY tank farm flammable gas must be verified less than 25% LFL for each of the tanks in the 241-AY tank farm within 5 days and within 5 days thereafter until ventilation is restored. (S.R. 3.2.1.4)

** If flammable gas reading is ≥ 25 % LFL, NOTIFY the Shift Manager.

*** Sample tube ID at valve SV-029 is 0.43 inches. Sample tube length is assumed to be 25 feet long. Required purge time is 5 sec per foot PLUS any additional instrument response time.

Not for Field Use

NOT for Field Use

Table 5 – 241-AZ Tank Farm

The following checks are to be performed within 72 hours of an inoperable primary DST Ventilation System or as directed by the Shift Manager.

For the multi-purpose probes, the sample tube at valve SV-027 or SV-028 is 0.18 in. ID. Assume the sample tubes extend 25 feet below the sample port when determining the time it takes for air to travel the length of the sample tube.

Tank	Location/Sample Valve/Alternate Sample Valve	Riser #	Date/Time*	O_2%	LFL % Reading**
241-AZ-101	Multi-Purpose Probe/ AZ101-WST-SV-027	071			
241-AZ-102	Multi-Purpose Probe/ AZ102-WST-SV-028/ AZ102-WST-SV-029***	071			
	IHT Signature/Date				
	Shift Manager Review Signature/Date				
COMMENTS:					

* ~~If the primary ventilation system is inoperable, flammable gas must be VERIFIED less than 25% LFL within 72 hours and once per 72 hour thereafter until ventilation is restored,~~

~~OR~~

~~IF flammable gas readings are being taken every 5 days as an alternate to verifying the airflow through each tank is > 5 ft³/min (CFM) in the 241-AZ tank farm (S.R. 3.2.1.3).~~* If the primary ventilation system is inoperable, flammable gas must be verified less than 25% LFL within 72 hours and once per 72 hour thereafter until ventilation is restored.

OR

IF flammable gas readings are being taken every 5 days as an alternate to verifying the primary ventilation stack exhaust flow is > 5 ft^3/min (CFM) in the 241-AZ tank farm flammable gas must be verified less than 25% LFL for each of the tanks in the 241-AZ tank farm within 5 days and within 5 days thereafter until ventilation is restored. (S.R. 3.2.1.3)

** IF flammable gas reading is ≥ 25 % LFL, NOTIFY the Shift Manager.

*** Sample tube ID at valve SV-029 is 0.43 inches. Sample tube length is assumed to be 25 feet long. Required purge time is 5 sec per foot PLUS any additional instrument response time.

Not for Field Use

Table 6 – 241-SY Tank Farm

The following checks are to be performed within 72 hours of an inoperable primary DST Ventilation System or as directed by the Shift Manager.

For the multi-purpose probes, the sample tube at valve SV-028 is 0.18 in. ID. The lower gas sample tube on the multi-functional instrument tree is 0.305 in. ID. Assume the sample tubes extend 25 feet below the sample port when determining the time it takes for air to travel the length of the sample tube.

Tank	Location/Sample Valve/Alternate Sample Valve	Riser #	Date/Time*	O_2%	LFL % Reading**
241-SY-101	Multi-Functional Instrument Tree/SY101-WST-SV-105 (Lower gas sample port)/ SY101-WST-SV-107	019			
241-SY-102	Multi-Purpose Probe/ SY102-WST-SV-028/ SY102-WST-SV-029***	018			
241-SY-103	Multi-Functional Instrument Tree/SY103-WST-SV-101 (Lower gas sample port)	018			
	IHT Signature/Date				
	Shift Manager Review Signature/Date				

COMMENTS:

~~* If the primary ventilation system is inoperable, flammable gas must be VERIFIED less than 25% LFL within 72 hours and once per 72 hour thereafter until ventilation is restored,~~

~~OR~~

~~IF flammable gas readings are being taken every 10 days as an alternate to verifying the primary ventilation stack exhaust flow is > 200 ft³/min (CFM) and the headspace in each tank is < 0 in. w.g. relative to atmospheric pressure in the 241-SY tank farms (S.R. 3.2.1.2).~~* If the primary ventilation system is inoperable, flammable gas must be verified less than 25% LFL within 72 hours and once per 72 hour thereafter until ventilation is restored,

OR

IF flammable gas readings are being taken every 10 days as an alternate to verifying the primary ventilation stack exhaust flow is > 200 ft^3/min (CFM) and the headspace in each tank is < 0.0 in. w.g. relative to atmospheric pressure in the 241-SY tank farm flammable gas must be verified less than 25% LFL for each of the tanks in the 241-SY tank farm within 10 days and within 10

NOT for Field Use

days thereafter until ventilation is restored. (S.R. 3.2.1.2).

** IF flammable gas reading is ≥ 25 % LFL, NOTIFY the Shift Manager.
*** Sample tube ID at valve SV-029 is 0.43 inches. Sample tube length is assumed to be 25 feet long. Required purge time is 5 sec per foot PLUS any additional instrument response time.

Not for Field Use

WRPS-PER-2009-0150 CAUSAL ANALYSIS: WHY STAIRCASE

Subject:	Vapor Sample Probes
Analyst:	D. A. Bragg/R. S. Nicholson
Date/time of occurrence:	December 30, 2008: 12:00 hours
Background:	The vapor sample probes at the AW Farm tanks have sample tubing attached at valve SV-030. This valve is on a sample tube that terminates just below the riser flange. In AN and AP Farms, the vapor sample probes have sample tubing attached at valve SV-028. This valve is on a sample tube that terminates in the tank dome space. These sample ports (SV-028 for AN and AP and SV-030 for AW) are the ones called out in Procedure TF-OPS-IHT-001, IHT Flammable Gas Surveillance on Double Shell Tanks.
Discussion:	Some people believe that just below the riser flange is the best location to monitor for flammable gases because hydrogen is lighter than air so if any is present, it will accumulate at the top of the risers. An undiluted "blob" of hydrogen could conceivably rise through the surrounding air. However, when hydrogen is mixed with the air, it will not separate out due to gravity and the density difference. The basis for LCO 3.2.1 states: For controls that require VERIFICATION that the flammable gas concentration is < 25% of the LFL in the tank headspace, flammable gas sampling or monitoring is required in the tank headspace or in a location where the flammable gas sampling or monitoring method ensures a representative measurement of the tank headspace flammable gas concentration. HNF-IP-1266 Section 5.10 (The implementing procedure for AC 5.10) references TFC-ESHQ-FP-STD-05, Flammable Gas Monitoring, for sampling locations. TFC-ESHQ-FP-STD-05 requires monitoring at least 3 feet below the bottom of the riser in the exhaust ventilation duct.
Expectation:	There is no reason that AW Farm should have a different sampling location from the other farms. The sample points should be consistent among the DSTs.
Extent of	An engineering review was performed to determined the extent of

Problems:

None of the plastic sample tubes that are connected to the vapor probes and MITs in the DST farms are documented on the drawings. The only exception is the plastic sample tube that is installed on the 102-AY vapor, which is shown on the P&ID drawing. The drawings show that all of the available ports are capped.

MITs are installed at tanks 101-AW, 103-AN, 104-AN, 105-AN, 101-SY, and 103-SY. Each MIT has 3 sampling ports, a pressure sensing port, and a water lance. Each of these 5 items has an isolation valve. The WST P&ID drawings show the 5 isolation valves, but provide no indication of which valve goes to what item.

The sampling points are not standard among the DST Farms. Each DST has an MIT per Drawing H-2-85141 or a vapor probe per Drawing H-14-102410. The following ports are used for dome space gas sampling:

- MIT lower gas sample port (103-AN, 104-AN, 105-AN, 103-SY)
- MIT middle gas sample port (101-AW, 101-SY)
- ½ inch SHMS return line on vapor probes (102-AW through 106-AW)
- ½ inch heated sample tube on vapor probes (101-AY, 102-AY, 102-AZ, 102-SY)
- ¼ inch tubes on vapor sample probes (all tanks not listed above)

The implementing procedure for AC 5.10 is HNF-IP-1266 section 5.10. This procedure references Procedure TFC-ESHQ-FP-STD-05 for sampling locations, which requires the sample location to be at least 3 feet below the bottom of the riser or in the exhaust ventilation duct. The sample ports that are currently used at all of the AW Farm tanks, 101-SY, and 5 of the 8 AP Farm tanks are closer to the bottom of the riser than 3 feet. The ECNs that are covered by this PrHA will bring the AW Farm tanks and 101-SY into compliance with the 3 foot requirement by selecting existing longer sample tubes on the MITs and vapor probes. The 5 tanks in AP Farm will remain out of compliance because the lowest sample tube on the vapor probes is currently being used. This tube terminates 2.29 to 2.31 feet below the bottom of the riser. At these tanks, riser extensions were installed to raise the vapor probes in preparation for increased waste level limits. Providing sample tubes for these 5 tanks in AP Farm that comply with the 3 foot requirement or changing the requirement are beyond the scope of the current design changes and does not pose a TSR violation or a threat to worker safety.

	sec/ft at 0.5 Lpm. The 2 sec/ft at 0.5 Lpm travel time is bounding for the sample tubes on the MITs and the ¼ inch sample tubes on the vapor probes.
Safety Significance:	Vapor sample probes are used to support flammable gas monitoring within the head sapce of a waste tank per HNF-IP-1266, Section 5.10 (The implementing procedure for AC 5.10). The sample probes and their tubes are general service equipment. The issue identified in this PER does not create or result in a unsafe condition or hazard to plant personnel, the environment or plant equipment.
Remedial Corrective Action:	1) Identified problem by writing this PER 2) Initiated extent of condition evaluations 3) Modified TF-OPS-IHT-001 to include information for wait time for sampling in AW Farm, etc.
Causal Analysis:	A Why Staircase was performed to determine the cause for the issue identified by this PER. Why aren't the sampling points uniform throughout the tank farms? Various engineers were responsible for the tank farms, and these assignments changed over time. Hence the location of the sample probe installations was not determined by a single engineer. Why didn't the engineers provide a standard location for the sample probe installations? This design requirement was not communicated adequately between Engineering personnel to ensure consistency. Why didn't the design for a standard location get communicated between the engineers? The sample probe equipment and its specific requirements were not fully documented in design media (facility drawings and ECNs). What impact if any does this inconsistency pose? As a result of the inconsistency, the proper wait time for sampling at AW Farm tanks was not specified in TF-OPS-IHT-001. This time is slightly greater due to the larger sample tube diameter. Hence when readings were taken, personnel defaulted to the standard 2 sec/ft requirement provided in other procedures. This procedure has been changed to provide the necessary information for determining the proper sample

	tubing is connected to the 1/2" metal tubing. Causal Codes: The cause of the issue identified in this PER was determined to be A1B3C01; "Design/Engineering Problem," "Design/ Documentation LTA," and "Design/Documentation not complete." A contributing cause was A5B2C08; "Communications LTA," Written Communications Content LTA," "Incomplete/Situation not Covered." Two corrective actions will be launched to prepare create an ECN and a work package to standardize the sample tubes. A third corrective action will be launched to update procedure TF-OPS-IHT-001 wait time information accordingly when the change is made to use only the smaller ¼" tubes. Note that procedure TF-OPS-IHT-001 was already modified as part of the remedial corrective actions to cover the special situation (the use of 1/2" sample tubes) for the AW Farm sample wait time.

Task# WRPS-PER-2009-0150.1

E-STARS[R] Report
Task Detail Report
08/06/2009 1623

TASK INFORMATION			
Task#	WRPS-PER-2009-0150.1		
Subject	WRPS-PER-2009-0150; RES; Prepare ECN(s) to correct facility drawings for the following: To document that metal caps have been removed and replaced		
Parent Task#	WRPS-PER-2009-0150	**Status**	CLOSED 07/29/2009
Reference	WRPS-PER-2009-0150	**Due**	08/03/2009
Originator	^PER CAs	**Priority**	Medium
Originator Phone		**Category**	PER
Origination Date	05/18/2009 1504	**Generic1**	None
Remote Task#		**Generic2**	None
Deliverable	PER Review	**Generic3**	None
Class	None	**View Permissions**	Global
Instructions	*No Instructions*		

ROUTING LISTS

1	Corrective Action	Inactive
	Prepare ECN(s) to correct facility drawings for the following: To document that metal caps have been removed and replaced by lengths of plastic sample tubing on gas sample ports on the MITs and vapor probes at each DST. Change the currently used sample locations, where necessary, so that the lower gas sample port will be the standard port at all DSTs with MITs, and the ¼ in. sample tube will be the standard port for all DSTs with vapor probes. Deliverable - Copy of released ECN(s) RESPONSIBLE MANAGER: When this corrective action is complete, enter a closure statement in E-STARS and close the E-STARS subtask. Refer to the Problem Evaluation Request procedure TFC-ESHQ-Q-C-C-01, Section 4.4 for closure documentation requirements	
	• Nicholson, Robert s (Bob) - Assign - Completed with comments - 07/29/2009 0956 *Instructions:*	
	• Knight, Mark A - Review - Concur with comments - 07/29/2009 1040 *Instructions:*	

ATTACHMENTS

Attachments	1. e-mail that corrects PER statements.pdf 2. Link to PER 3. P1010157.JPG 4. P1260077.JPG 5. PER-2009-0150 FE - FG Sample Point TSR Violation .doc 6. RE PER-2009-0150 FE on TSR Violation for FG Samplings in AW-Farm vs. LCO 3.2.1.msg

Task# WRPS-PER-2009-0150.1

	7. Vapor probe drawing.pdf 8. WRPS-PER-2009-0150 CLOSURE TF-OPS-IHT-001_B0_IHT_Flammable_Gas_Surveillances_on_Double_Shell_Tanks.doc 9. WRPS-PER-2009-0150.1 CLOSURE AN & AP FARM ECN-726360-R0.pdf 10. WRPS-PER-2009-0150.1 CLOSURE AW FARM ECN-726352-R0.pdf 11. WRPS-PER-2009-0150.1 CLOSURE AY FARM ECN-726357-R0.pdf 12. WRPS-PER-2009-0150.1 CLOSURE AZ FARM ECN-726358-R0.pdf 13. WRPS-PER-2009-0150.1 CLOSURE GENERAL ECN-726356-R0.pdf 14. WRPS-PER-2009-0150.1 CLOSURE SY FARM ECN-726359-R0.pdf 15. WRPS-PER-2009-0150_CLOSURE_WHY_STAIRCASE_05-06-09.doc

COMMENTS

Poster	Nicholson, Robert s (Bob) (Owen, Annette) - 07/29/2009 0956
	Completed
	ECNS have been attached.
Poster	Knight, Mark A (Owen, Annette) - 07/29/2009 1040
	Concur
	Concur.
Poster	^PER CAs (Owen, Annette) - 07/29/2009 1042
	CLOSED
	Closure statements and attached documentation (released ECN's) is adequate to close this action.

TASK DUE DATE HISTORY

Modified	07/12/2009 1613 - ^PER CAs (Owen, Annette)	**New Due Date**	08/03/2009 0000
Modified	05/18/2009 1504 - ^PER CAs	**New Due Date**	07/14/2009 0000
Modified	05/18/2009 1504 - ^PER CAs	**New Due Date**	12/20/2009 0000

SUB TASK HISTORY

No Subtasks

-- end of report --

S ENGINEERING CHANGE NOTICE	1a. ECN 726360 R 0
Page 1 of 20 ☒ DM ☐ FM ☐ TM	1b. Proj. ECN - - R

2. Simple Modification ☒ Yes ☐ No	3. Design Inputs – For full ECNs, record information on the ECN-1 Form (not required for Simple Modifications)		4. Date 5/4/09
5. Originator's Name, Organization, MSIN, & Phone No. Robert S. Nicholson, BOSE, S5-25, 373-2986	6. PrHA Number No. 00795 R - 0 ☐ N/A	7. USQ Number No. TF - 09 - 0751 - D R - 0 ☐ N/A	8. Related ECNs ECN-726356-R0
9. Title AN AND AP PRIMARY TANK SAMPLE POINTS	10. Bldg. / Facility No. 241-AN/241-AP	11. Equipment / Component ID VAPOR PROBES, MITS	12. Approval Designator S
13. Engineering Documents/Drawings to be Changed (Incl. Sheet & Rev. Nos.) See Block 18.		14. Safety Designation ☐ SC ☐ SS ☒ GS ☐ N/A	15. Expedited/Off-Shift ECN? ☐ Yes ☒ No
16a. Work Package Number N/A	16b. Modification Work Completed N/A Responsible Engineer / Date	16c. Restored to Original Status (TM) N/A Responsible Engineer / Date	17. Fabrication Support ECN? ☐ Yes ☒ No

18. **Description of the Change** (Use ECN Continuation pages as needed)

Document that plastic sample tubes are connected to the lower gas sample ports on the MITs at tanks 103-AN, 104-AN, and 105-AN and to the 1/4 inch sample tubes on the vapor probes at the other tanks in AN and AP Farms.

This ECN changes the following drawings:

H-14-020601 Sheet 1 Rev 10	H-14-020603 Sheet 1 Rev 9
H-14-020601 Sheet 2 Rev 10	H-14-020603 Sheet 2 Rev 9
H-14-020601 Sheet 3 Rev 5	H-14-020603 Sheet 3 Rev 7
H-14-020601 Sheet 4 Rev 8	H-14-020603 Sheet 4 Rev 8
H-14-020601 Sheet 5 Rev 6	H-14-020603 Sheet 5 Rev 6
H-14-020601 Sheet 6 Rev 7	H-14-020603 Sheet 6 Rev 7
H-14-020601 Sheet 7 Rev 10	H-14-020603 Sheet 7 Rev 6
	H-14-020603 Sheet 8 Rev 7

19. **Justification of the Change** (Use ECN Continuation pages as needed)

Engineering Rework ☐ Yes ☒ No
Training Impact ☐ Yes ☒ No

Plastic sample tubes, which are not documented on the drawings, are connected to the vapor probes and MITs in AN and AP Farms. An ECN is normally not required to remove a metal plug or cap from a sample tube, connect plastic tubing, and take a sample using a hand held instrument. An ECN is needed to document that plastic sample tubes are installed on the vapor probes and MITs in AN and AP farms because the plastic tubes are left installed for years.

20. **ECN Category**

☐ Direct Revision
☒ Supplemental
☐ Void/Cancel

ECN Type

☐ Supersedure
☐ Revision

21. **Distribution**

Name	MSIN	Name	MSIN
Brooks RL	S5-03		
Dunn RB	S5-07		

Release Stamp

DATE: JUN 15 2009
STA: 4
HANFORD RELEASE
ID: 18

ENGINEERING CHANGE NOTICE

☒ DM ☐ FM ☐ TM

1a. ECN 726360 R 0

1b. Proj. ECN - - R

22. **Revisions Planned** (Include a brief description of the contents of each revision)

None

Note: All revisions shall have the approvals of the affected organizations as identified in block 12 "Approval Designator," on page 1 of this ECN.

23. **Commercial Grade Item Dedication Numbers** (associated with this design change)

N/A

24. **Engineering Data Transmittal Numbers** (associated with this design change, e.g., new drawings, new documents)

N/A

25. **Other Non Engineering (not in HDCS) documents that need to be modified due to this change**

Type of Document	Document Number	Update Completed On	Responsible Engineer (print/sign and date)
Alarm Response Procedure	N/A	N/A	N/A
Operations Procedure	N/A	N/A	N/A
Maintenance Procedure	N/A	N/A	N/A
None			

26. **Field Change Notice(s) Used?**

☐ **Yes** ☒ **No**

If Yes, Record Information on the ECN-2 Form, attach form(s), include a description of the interim resolution on ECN Page 1, block 18, and identify permanent changes.

NOTE: ECNs are required to record and approve all FCNs issued. If the FCNs have not changed the original design media then they are just incorporated into the design media via an ECN. If the FCN did change the original design media then the ECN will include the necessary engineering changes to the original design media.

27. **Design Verification Required?**

☐ **Yes** ☒ **No**

If Yes, as a minimum attach the one page checklist from TFC-ENG-DESIGN-P-17.

28. **Approvals**

	Facility/Project Signatures	Date		A/E Signatures	Date
Resp. Engineer	RS Nicholson	6/10/09	Originator/Design Agent		
Resp. Manager	WM Harty	6/10/09	Professional Engineer		
Quality Assurance			Project Engineer		
IS&H Engineer	~~KA Reusche~~ WL Adams	6/11/09	Quality Assurance		
NS&L Engineer			Safety		
Environ. Engineer			Designer		
Engineering Checker	DA Bragg	6/10/09	Environ. Engineer		
Other			Other		
Other			Other		
Other			DEPARTMENT OF ENERGY / OFFICE OF RIVER PROTECTION		
Other			Signature or a Control Number that tracks the Approval Signature		
Other					
Other			ADDITIONAL SIGNATURES		
Other					
Other					

Document/Drawing No. Sheet Revision

Background:

Tanks 101-AN, 102-AN, 106-AN, and 107-AN and all of the tanks in AP Farm have a vapor probe per Drawing H-14-102410. Plastic sample tubing is connected to the ¼ inch sample tube on each of these vapor probes. SV-028 is the isolation valve on the ¼ inch sample tube on each vapor probe.

Tanks 103-AN, 104-AN, and 105-AN have an MIT per Drawing H-2-85141. Plastic sample tubing is connected the lower gas sample port on each MIT.

Problems:

The plastic sample tubes that are connected to the vapor probes and MITs in AN and AP Farms are not documented on the drawings. The drawings show that all of the ports on the vapor probes and MITs in AN and AP farms are capped.

Each MIT has 3 sampling ports, a pressure sensing port, and a water lance. Each of these 5 items has an isolation valve. The WST P&ID drawings show the 5 isolation valves, but provide no indication of which valves goes to what items.

Solution:

Document on the WST P&ID drawings that a plastic sample tube is connected to the ¼ inch sample tube at each vapor probe and the lower gas sample port at each MIT in AN and AP Farms.

Change drawing the WST P&ID drawings to identify the items on the MITs that are connected to the 5 isolation valves.

Analysis:

The Champs equipment data base identifies the items on the 103-AN, 104-AN, and 105-AN MITs that are connected to each of the isolation valves.

MIT PORT	ISOLATION VALVE
PRESSURE PORT	AN10(3,4,5)-WST-SV-101
MIDDLE GAS SAMPLE PORT	AN10(3,4,5)-WST-SV-102
LOWER GAS SAMPLE PORT	AN10(3,4,5)-WST-SV-103
UPPER GAS SAMPLE PORT	AN10(3,4,5)-WST-SV-104
WATER LANCE	AN10(3,4,5)-WST-V-135

Note: An AutoCAD page may be used in place of this form (the header section items must be included on the AutoCAD page).

Document/Drawing No. Sheet Revision

The implementing procedure for AC 5.10 is HNF-IP-1266 section 5.10. This procedure references Procedure TFC-ESHQ-FP-STD-05 for sampling locations, which requires the sample location to be at least 3 feet below the bottom of the riser or in the exhaust ventilation duct. This requirement is not satisfied at 5 tanks in AP Farm where the vapor probes are at the 28 foot radius and have been raised by a 4 foot riser extension per assembly 110 on Drawing H-2-85349 in preparation for increased waste level limits. At these 5 tanks, the vertical distance between the bottom of the riser and the bottom of the vapor probe is 2.3 feet. None of the sample tubes on the vapor probes terminate at a lower elevation than the 1/4 inch tubes. It is assumed that the air composition 2.3 feet below the bottom of the riser is the same as the air composition 3 feet below the bottom of the riser.

The values in the following table were calculated from dimensions and elevations on the following drawings:

- H-14-102410 sheets 1 and 2 for length of ¼ inch tube on vapor probes (17 ft 11 ½ in.).
- H-2-85122 for MIT lower gas sample port elevations (648.98 ft)
- H-2-90534 for the AP Farm primary tank bottom elevations (624 ft), height of the dome ellipse center above the primary tank bottom (31 ft 9 in.), and dome ellipse dimensions (30 ft x 80 ft)
- H-2-71975 for the 101-AN through 106-AN primary tank bottom elevations (613.07 ft), height of the dome ellipse center above the primary tank bottom (31 ft 9 in.), and dome ellipse dimensions (30 ft x 80 ft)
- H-2-71160 for the 107-AN primary tank bottom elevation (612.74 ft)
- H-14-010503 sheets 1 - 8 for the AP Farm riser radii (28 feet for all AP Farm tanks except 15 ft for 103-AP) and riser elevations.
- H-14-010501 sheets 1 – 7 for the AN Farm riser radii (28 feet for all AN Farm tanks except 10 ft for 101-AN) and riser elevations.

Tank	Distance from bottom of riser to bottom of current sample tube (ft)
101-AP	2.29
102-AP	2.30
103-AP	5.50
104-AP	2.31
105-AP	6.31
106-AP	6.38
107-AP	2.29
108-AP	2.29
101-AN	8.55
102-AN	4.74
103-AN	6.55
104-AN	6.55
105-AN	6.55
106-AN	4.74
107-AN	4.41

Note: An AutoCAD page may be used in place of this form (the header section items must be included on the AutoCAD page).

Document/Drawing No. Sheet Revision

Sampling Procedures TF-OPS-IHT-007, TFC-OPS-IHT-004, and TFC-OPS-IHT-003 specify a travel time in the sample tube of 2 sec/ft and a sample rate of 0.5 Lpm. The 2 sec/ft at 0.5 Lpm travel time is bounding for the sample tubes on the MITs and the ¼ inch sample tubes on the vapor probes.

The values in the following table were calculated using vapor probe sample tube dimensions from H-2-102410 sheets 1 and 2 and MIT sample tube dimensions from H-2-85145.

	OD (in.)	Wall thickness (in.)	Travel time (sec/ft)
1/4 inch tubes at SV-028 on the vapor probes	1/4	0.035	0.60
MIT sample tubes	0.375	0.035	1.72

Note: An AutoCAD page may be used in place of this form (the header section items must be included on the AutoCAD page).

1a. ECN-726360-R0

1b. Proj. ECN - - R

Document/Drawing No. H-14-020601 Sheet 1 Revision 10

WAS:

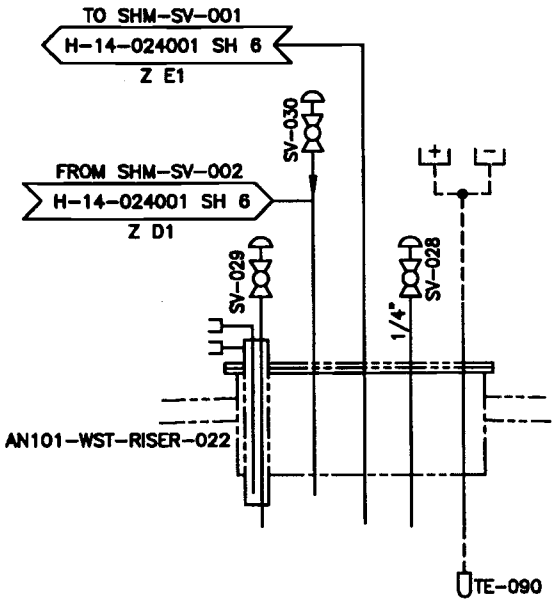

1 DETAIL
VAPOR PROBE ASSEMBLY

NOTE:
SEE SHM SYSTEM COG ENGINEER PRIOR TO USE OF THIS EQUIPMENT

IS:

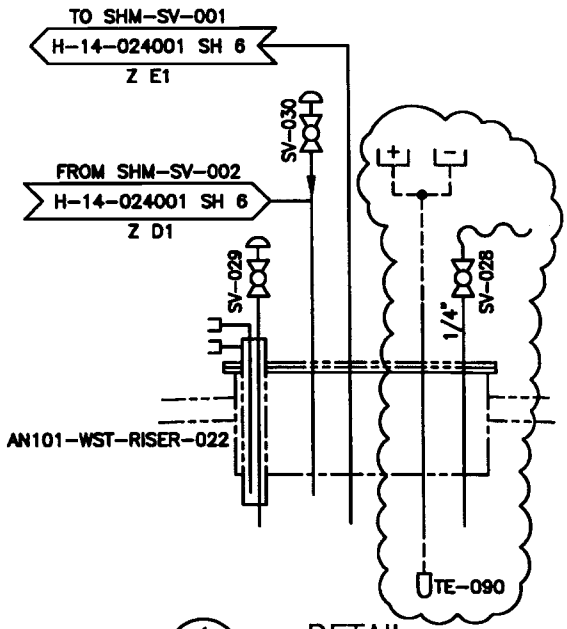

1 DETAIL
VAPOR PROBE ASSEMBLY

Document/Drawing No. H-14-020601 Sheet 2 Revision 10

WAS:

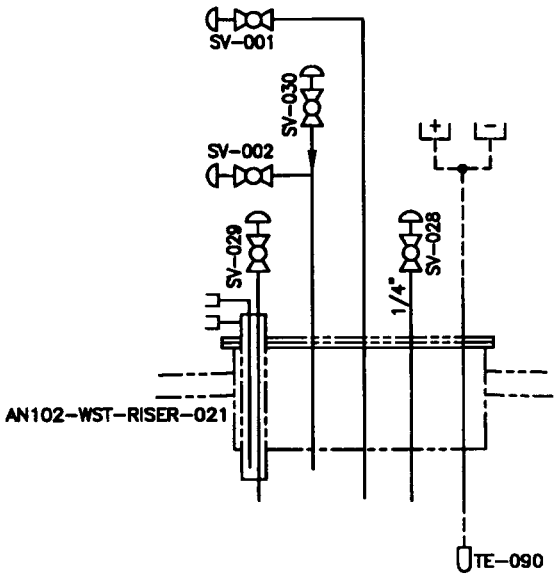

3 / - DETAIL
VAPOR PROBE ASSEMBLY

NOTE:
SEE SHM SYSTEM COG ENGINEER PRIOR TO USE OF THIS EQUIPMENT

IS:

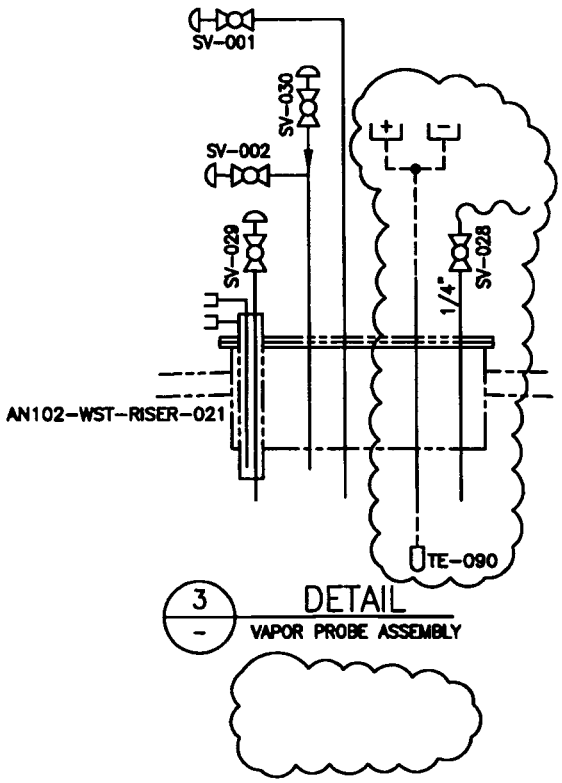

3 / - DETAIL
VAPOR PROBE ASSEMBLY

Document/Drawing No. H-14-020601 Sheet 3 Revision 5

WAS:

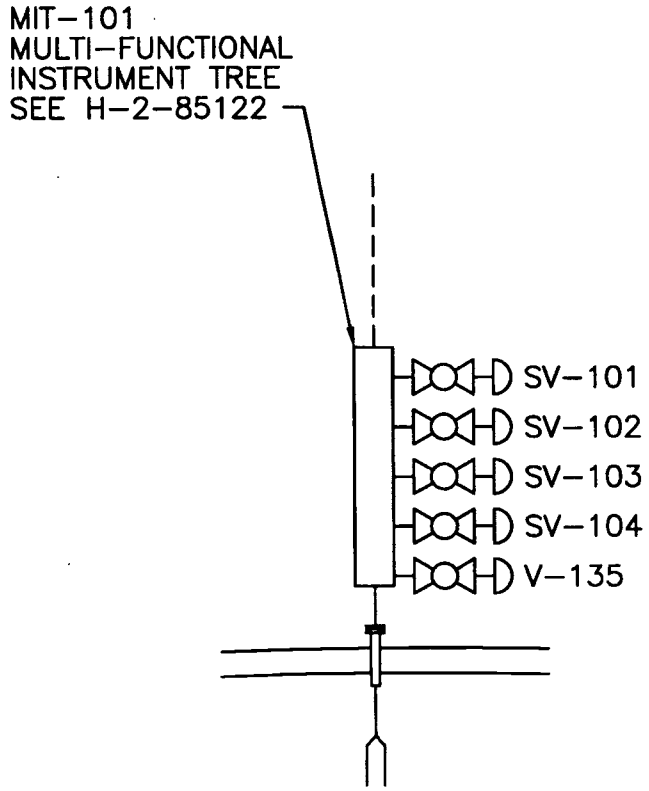

IS:

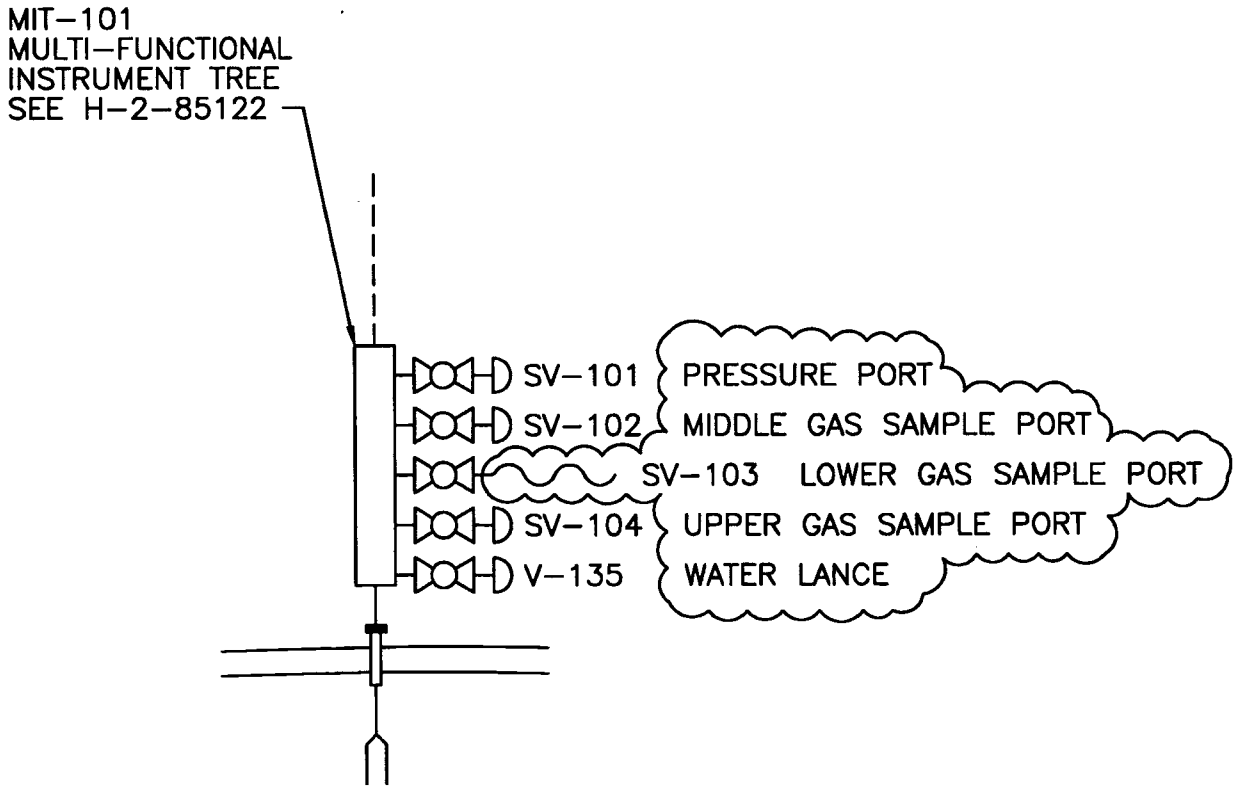

Document/Drawing No. H-14-020601 Sheet 4 Revision 8

WAS:

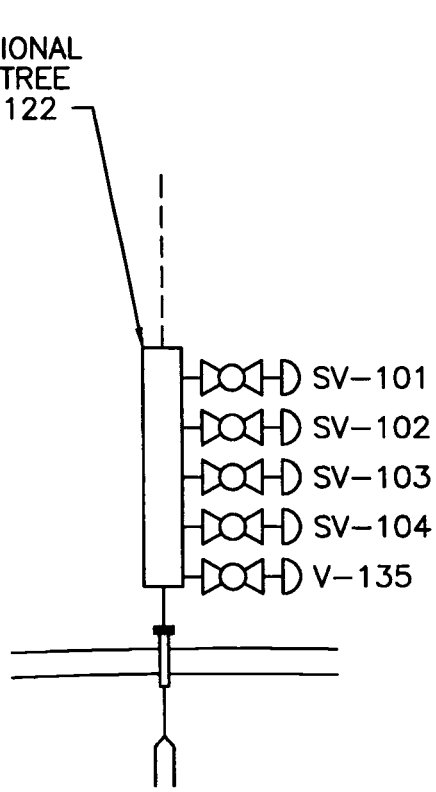

IS:

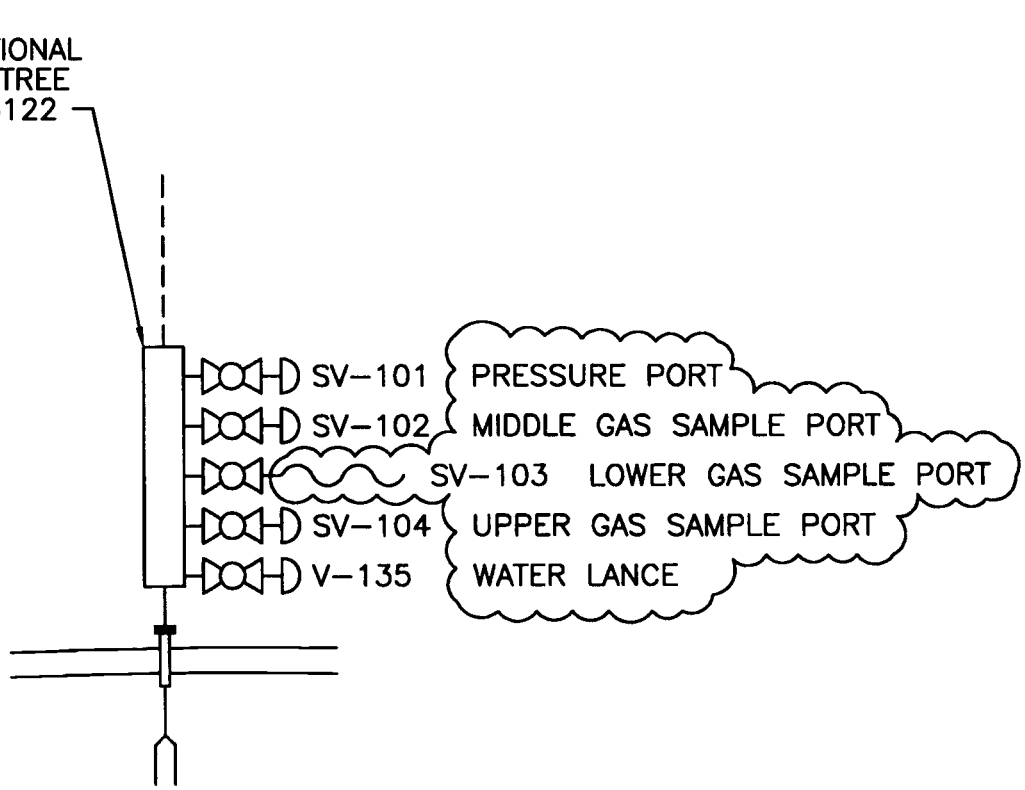

Document/Drawing No. H-14-020601 Sheet 5 Revision 6

WAS:

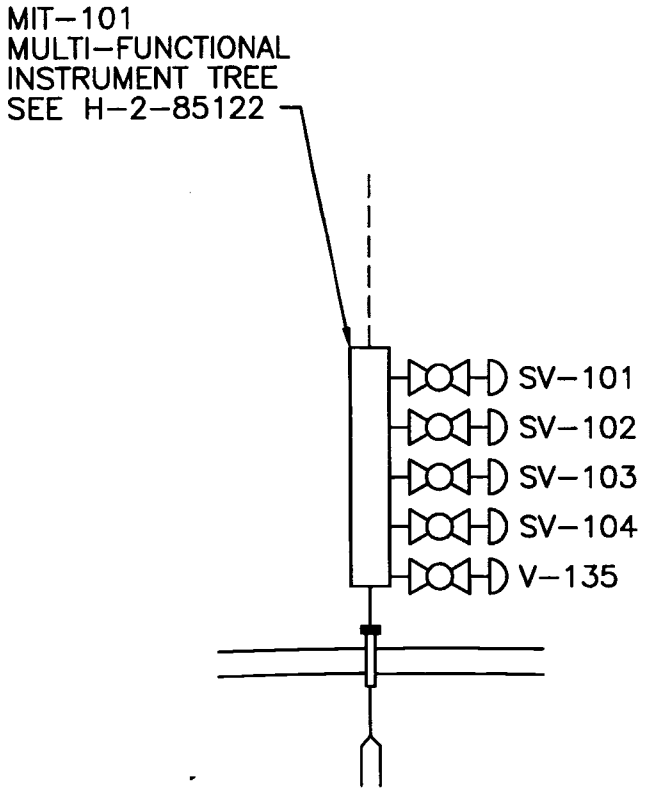

IS:

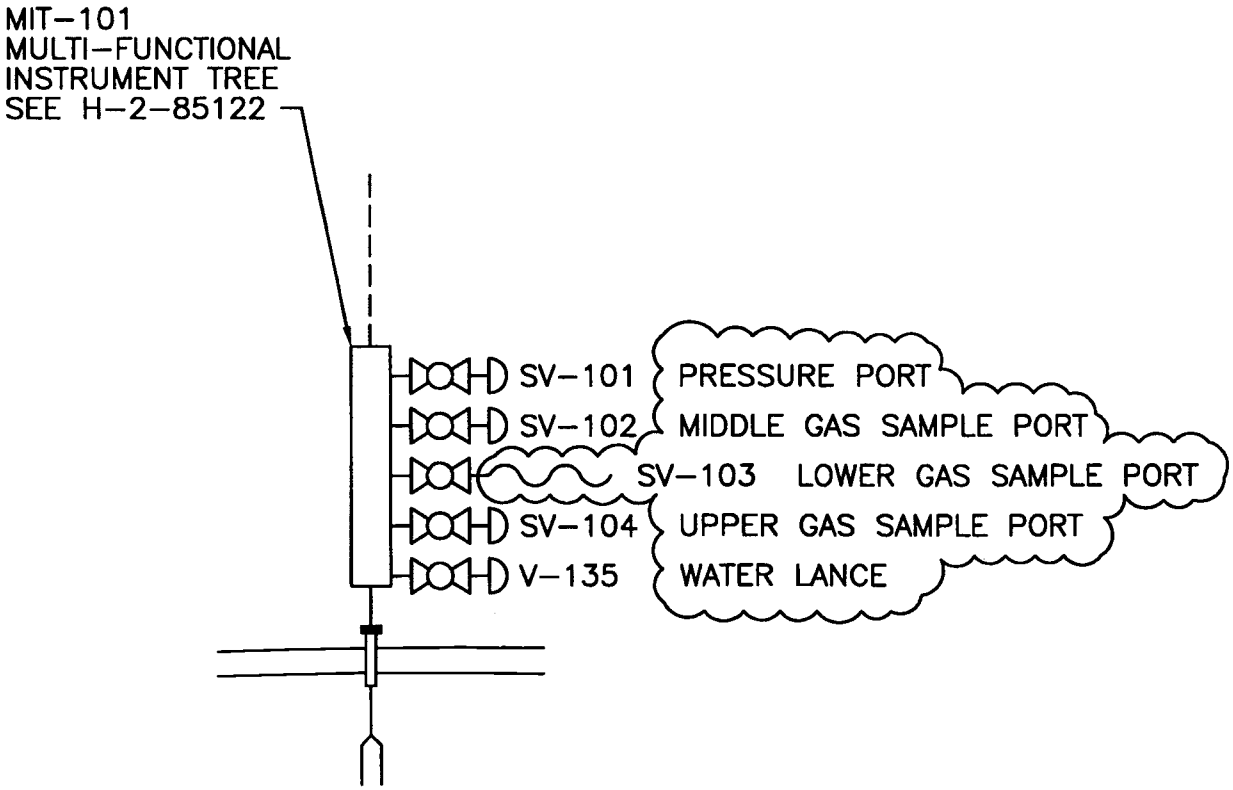

Document/Drawing No. H-14-020601 Sheet 6 Revision 7

WAS:

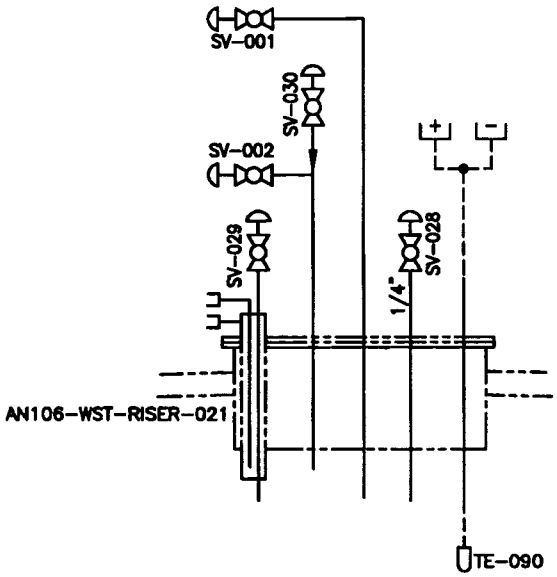

4 DETAIL
VAPOR PROBE ASSEMBLY

NOTE:
SEE SHM SYSTEM COG ENGINEER PRIOR TO USE OF THIS EQUIPMENT

IS:

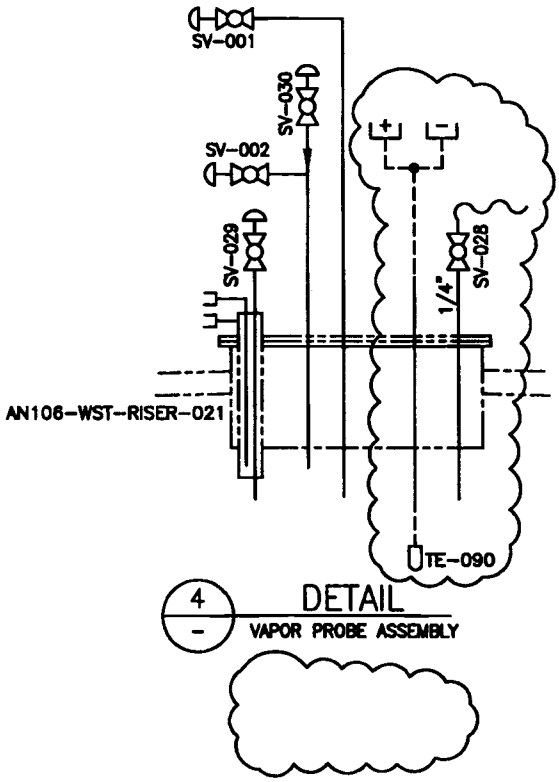

4 DETAIL
VAPOR PROBE ASSEMBLY

Document/Drawing No. H-14-020601 Sheet 7 Revision 10

WAS:

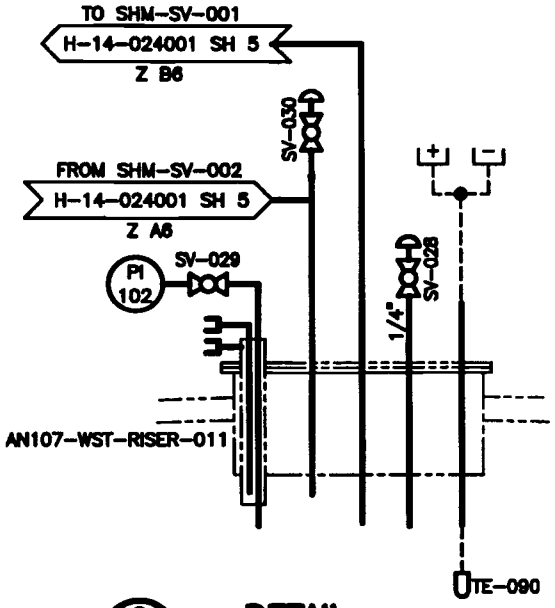

2 DETAIL
VAPOR PROBE ASSEMBLY

NOTE:
SEE SHM SYSTEM COG ENGINEER PRIOR TO USE OF THIS EQUIPMENT

IS:

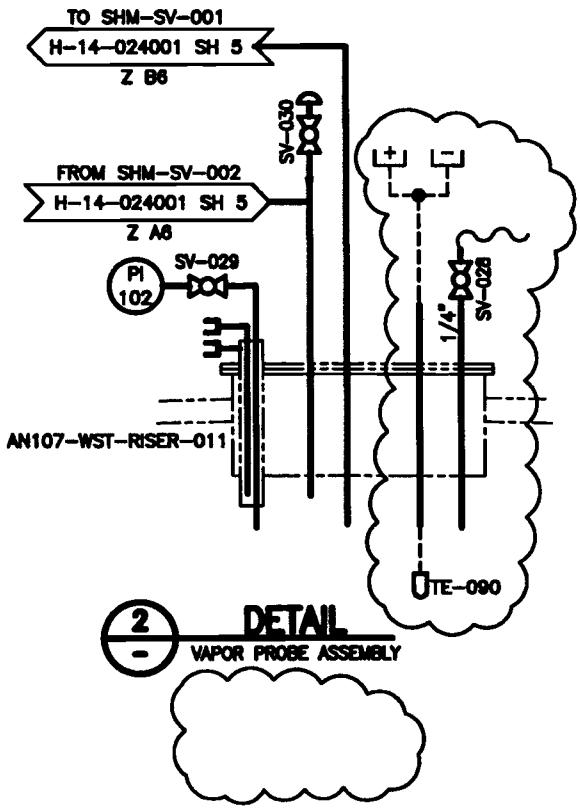

2 DETAIL
VAPOR PROBE ASSEMBLY

WAS:

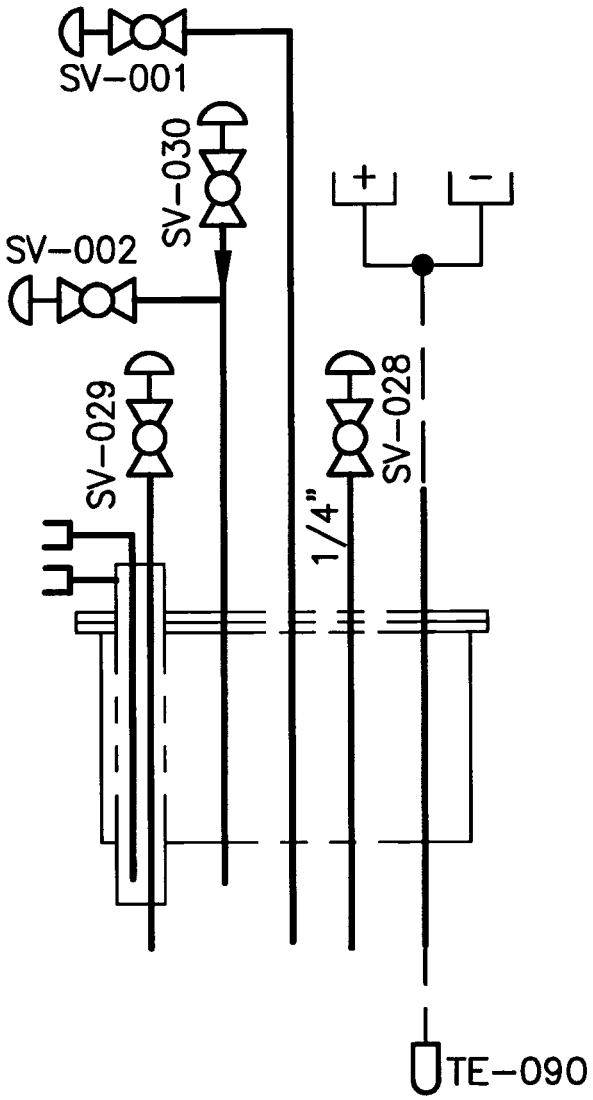
SV-001
SV-030
SV-002
SV-029
SV-028
1/4"
+
-
TE-090

IS:

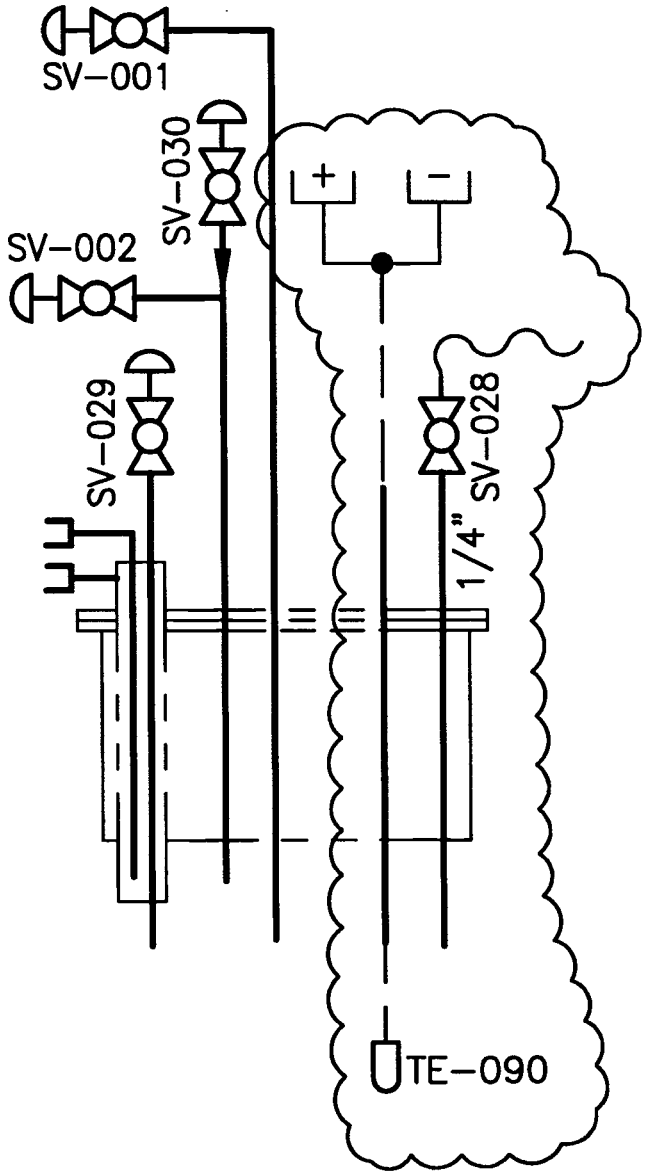
SV-001
SV-030
SV-002
SV-029
SV-028
1/4"
+
-
TE-090

WAS:

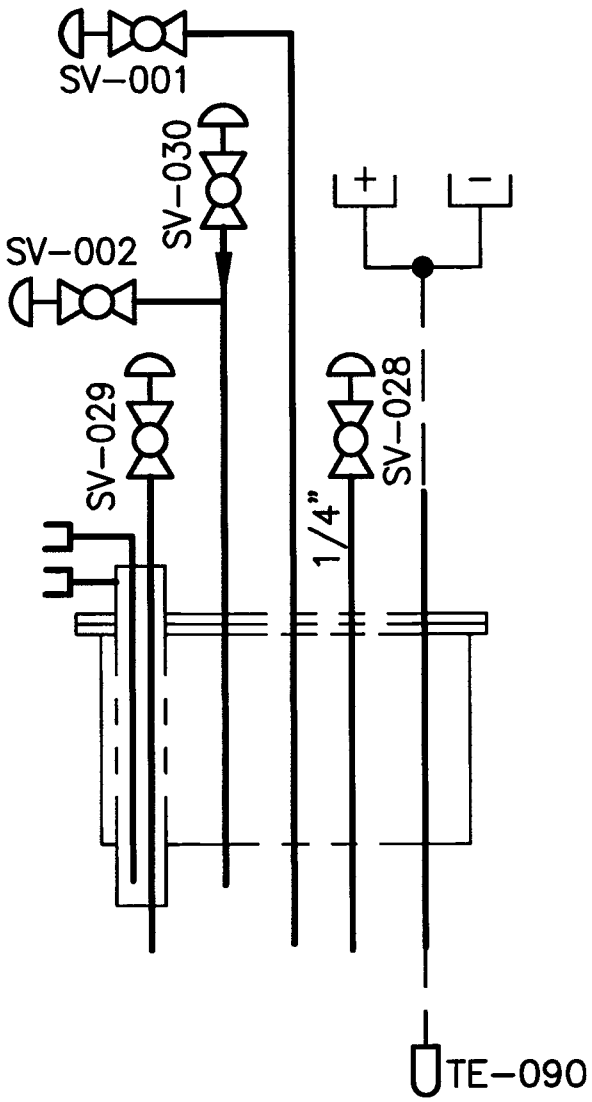
SV-001
SV-030
SV-002
SV-029
SV-028
1/4"
+
-
TE-090

IS:

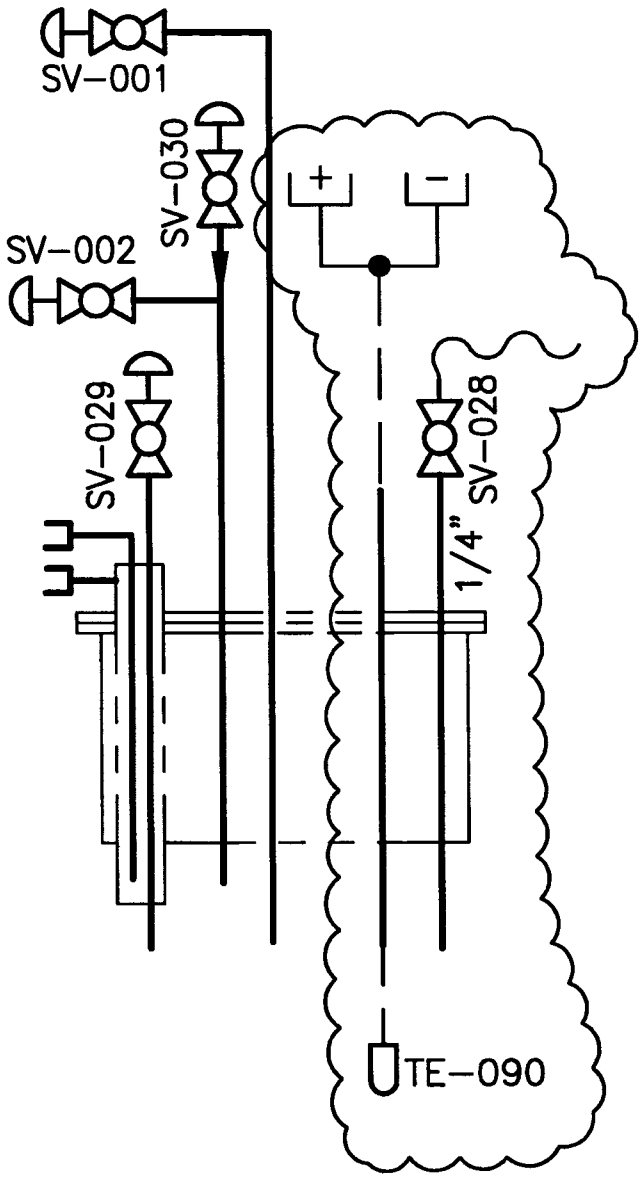
SV-001
SV-030
SV-002
SV-029
SV-028
1/4"
+
-
TE-090

WAS:

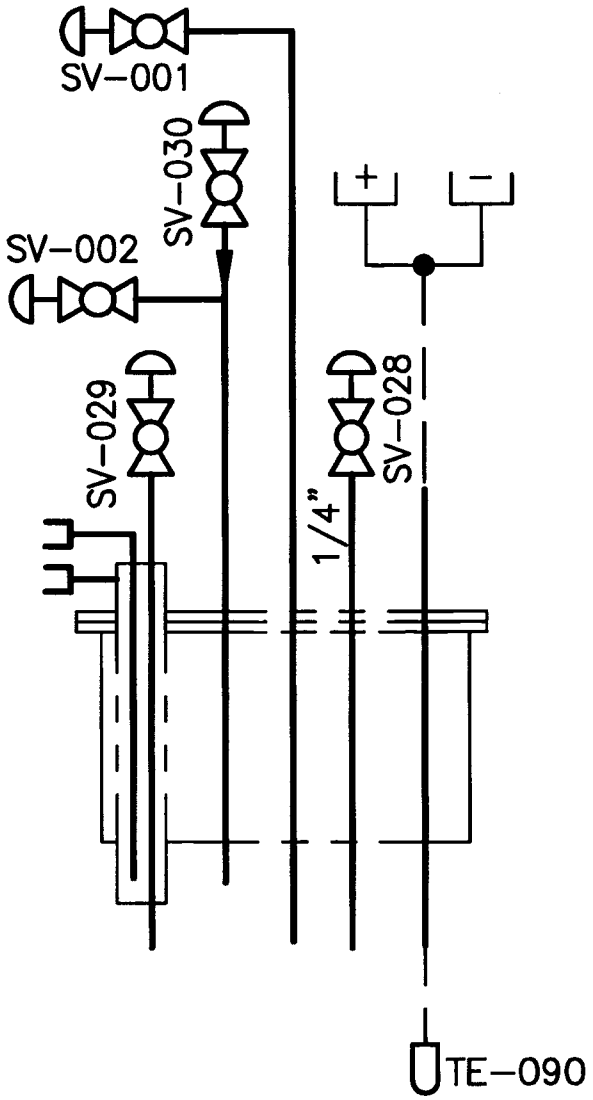
SV-001
SV-030
SV-002
SV-029
1/4"
SV-028
+
-
TE-090

IS:

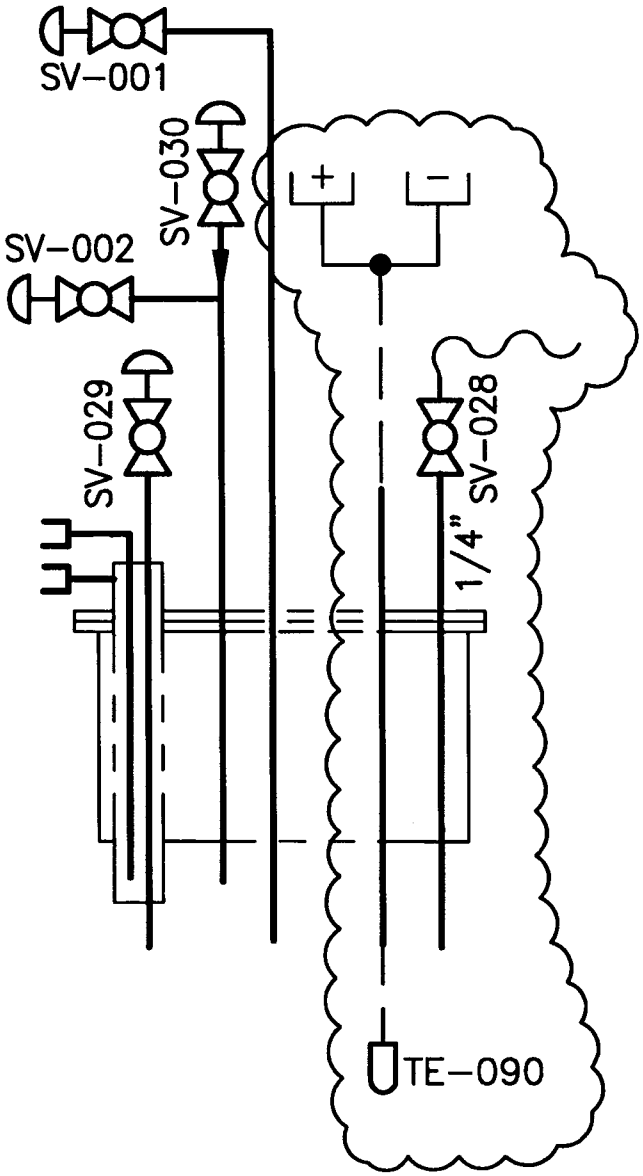
SV-001
SV-030
SV-002
SV-029
1/4"
SV-028
+
-
TE-090

WAS:

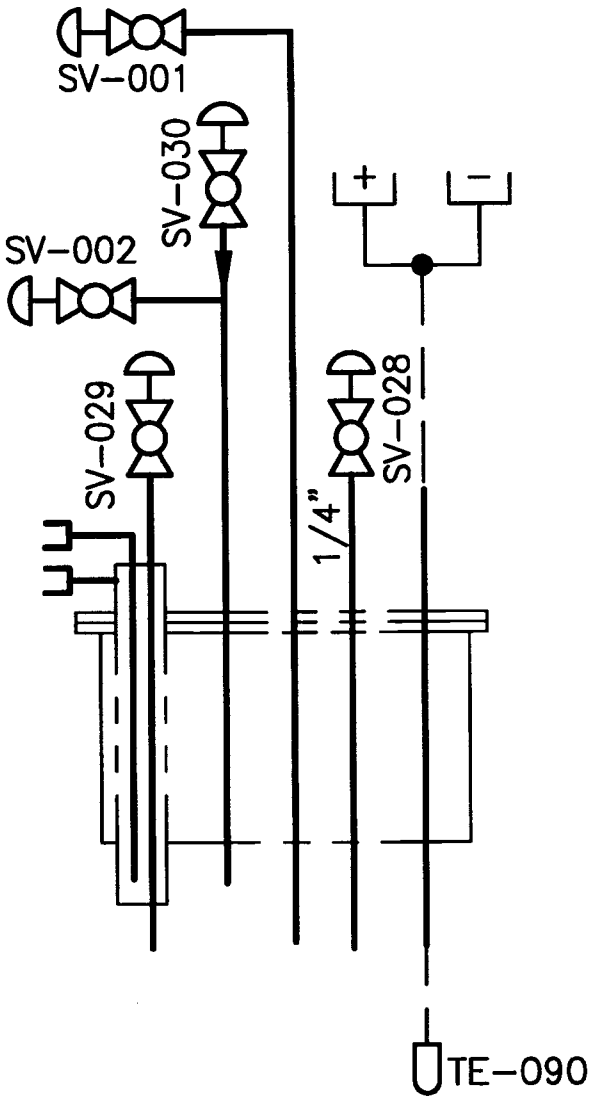
SV-001
SV-030
SV-002
SV-029
1/4"
SV-028
+
-
TE-090

IS:

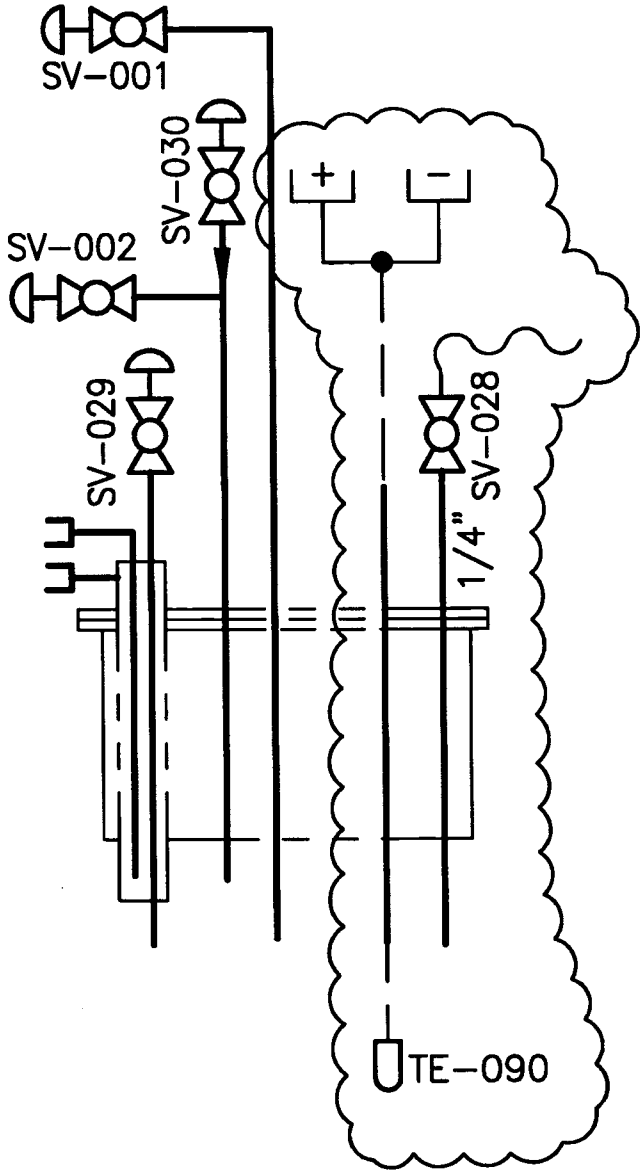
SV-001
SV-030
SV-002
SV-029
1/4"
SV-028
+
-
TE-090

WAS:

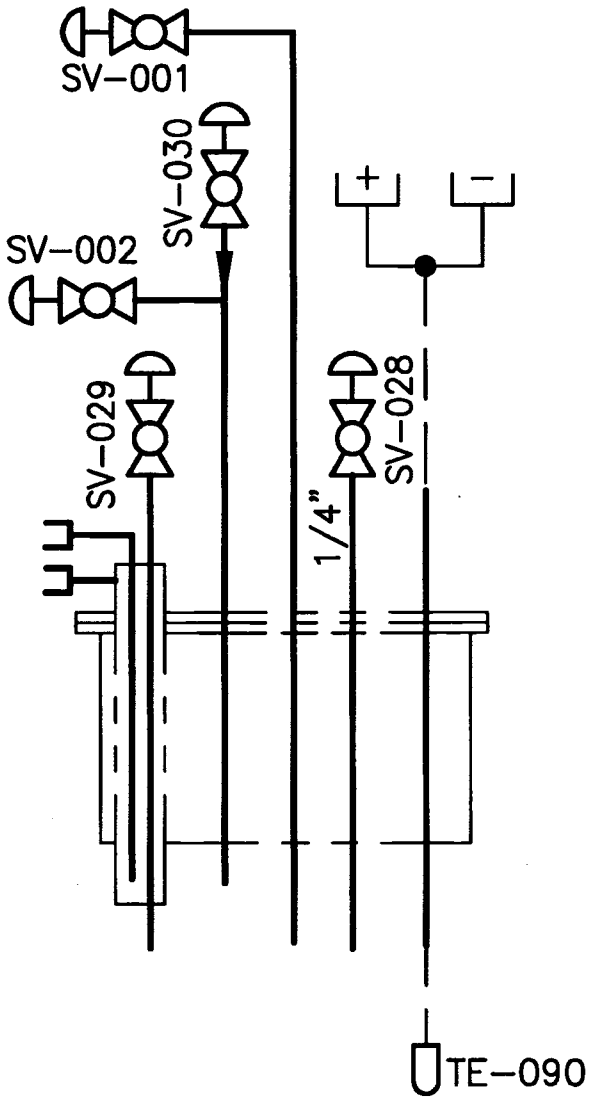
SV-001
SV-030
SV-002
SV-029
1/4"
SV-028
+
-
TE-090

IS:

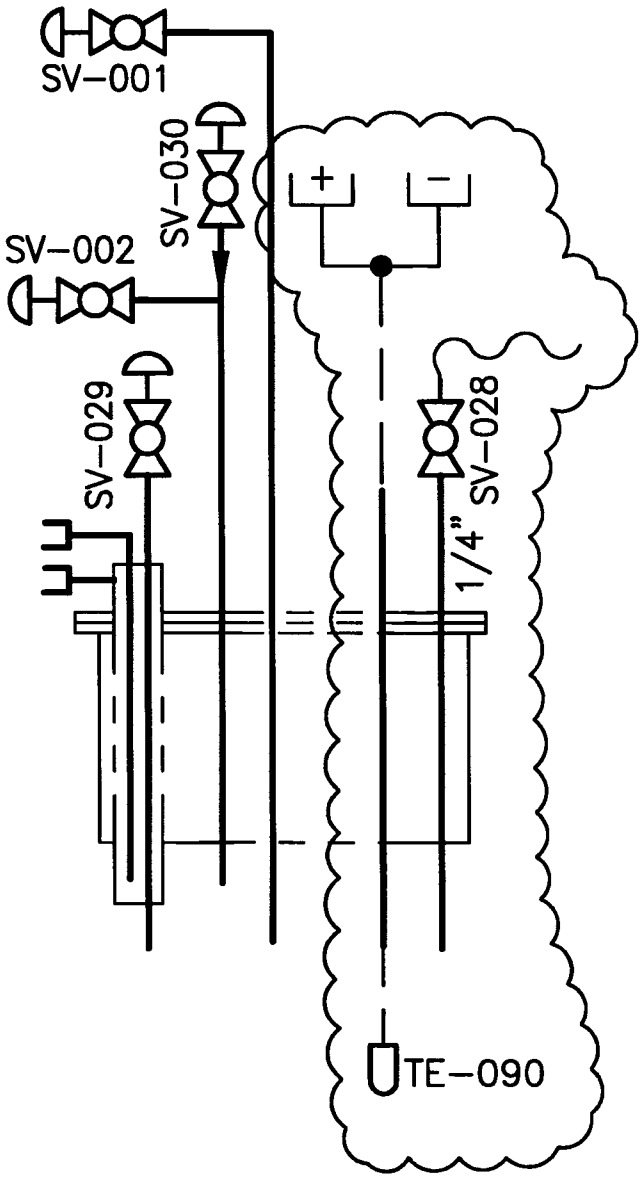
SV-001
SV-030
SV-002
SV-029
1/4"
SV-028
+
-
TE-090

WAS:

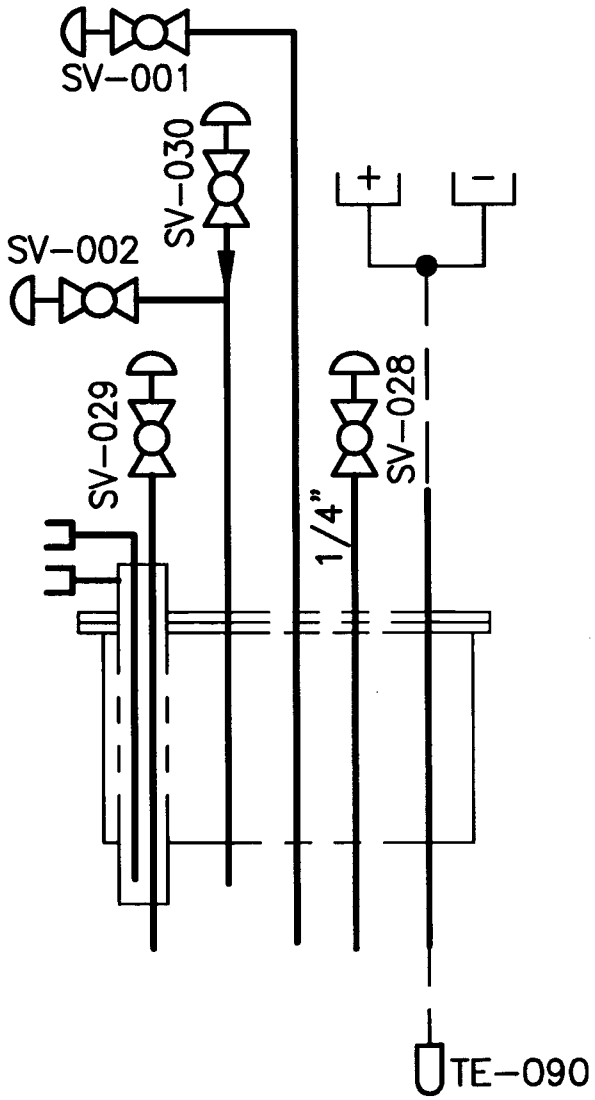
SV-001
SV-030
SV-002
SV-029
SV-028
1/4"
+
-
TE-090

IS:

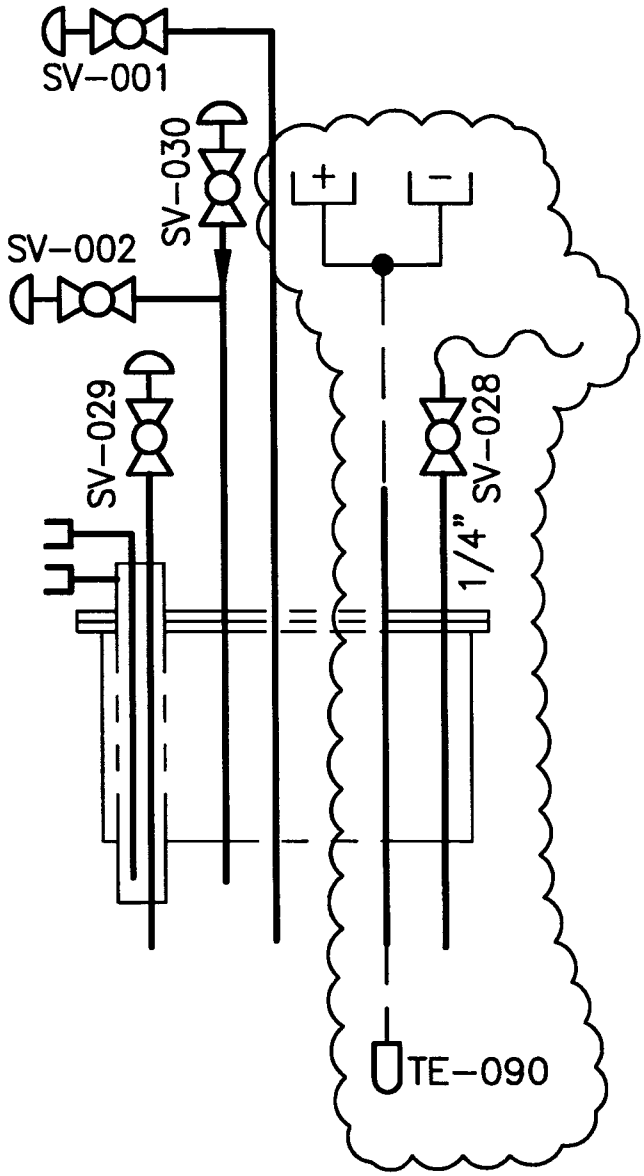
SV-001
SV-030
SV-002
SV-029
SV-028
1/4"
+
-
TE-090

WAS:

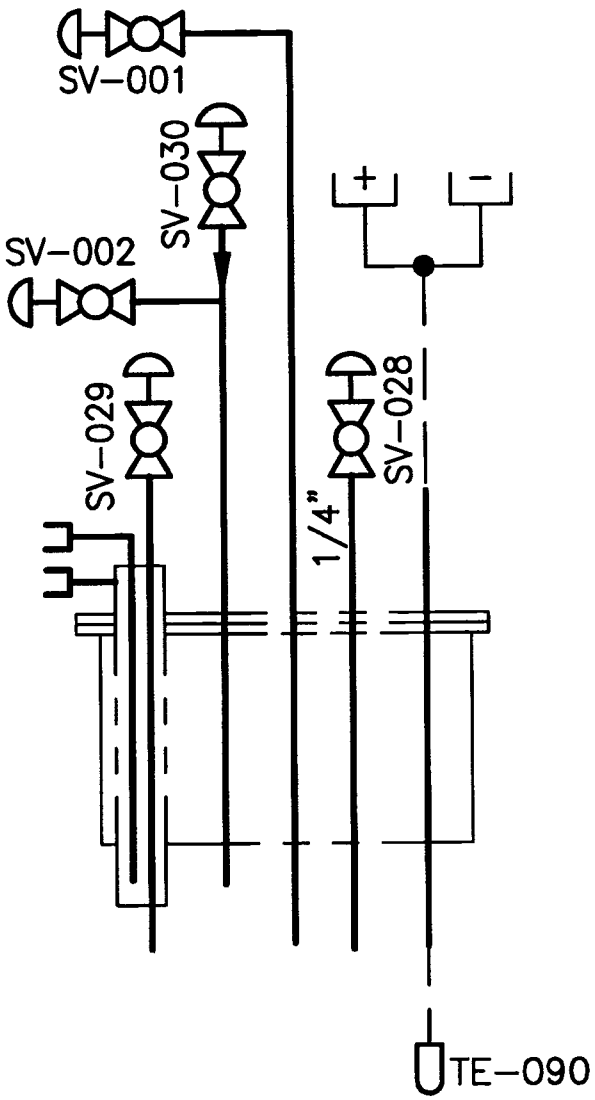
SV-001
SV-030
SV-002
SV-029
SV-028
1/4"
+
-
TE-090

IS:

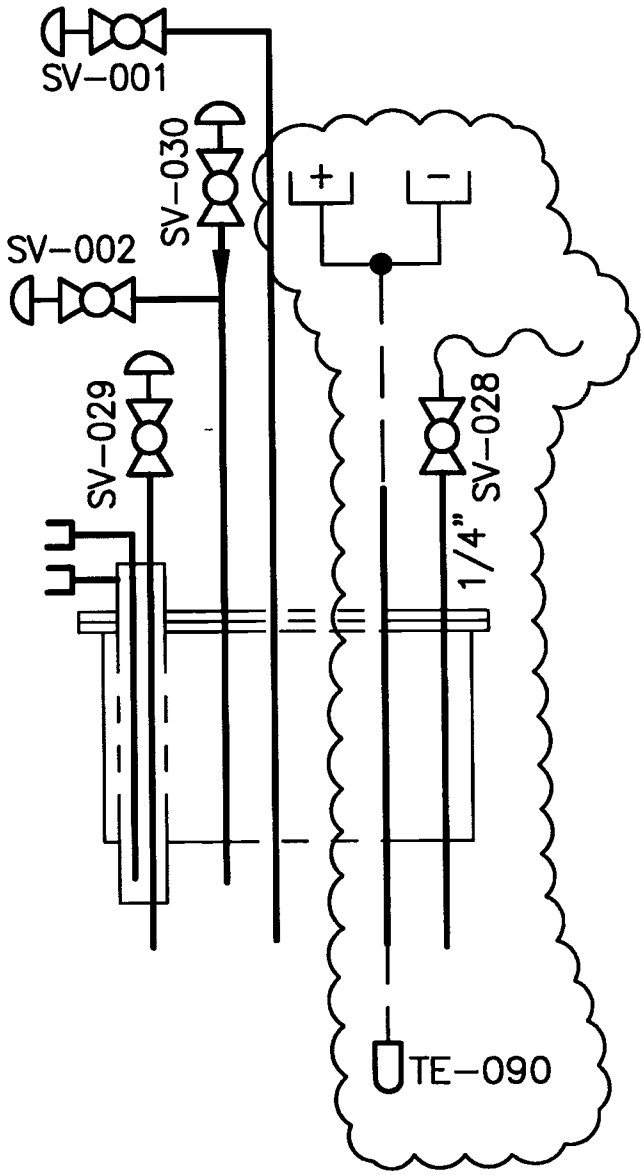
SV-001
SV-030
SV-002
SV-029
SV-028
1/4"
+
-
TE-090

1a. ECN-726360-R0

1b. Proj. ECN - - R

Document/Drawing No. H-14-020603 Sheet 8 Revision 7

WAS:

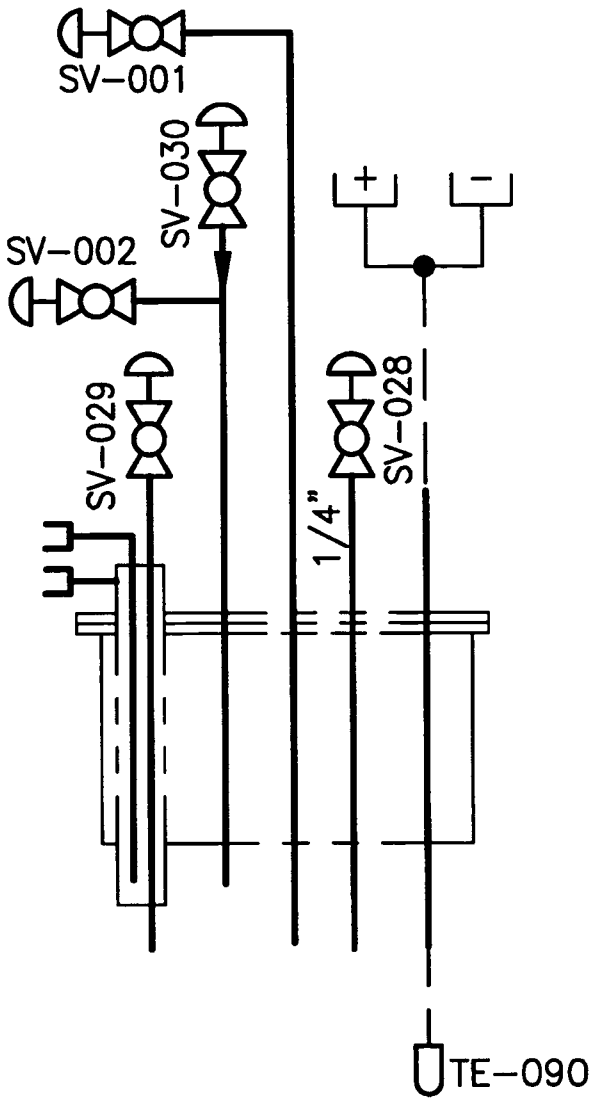

IS:

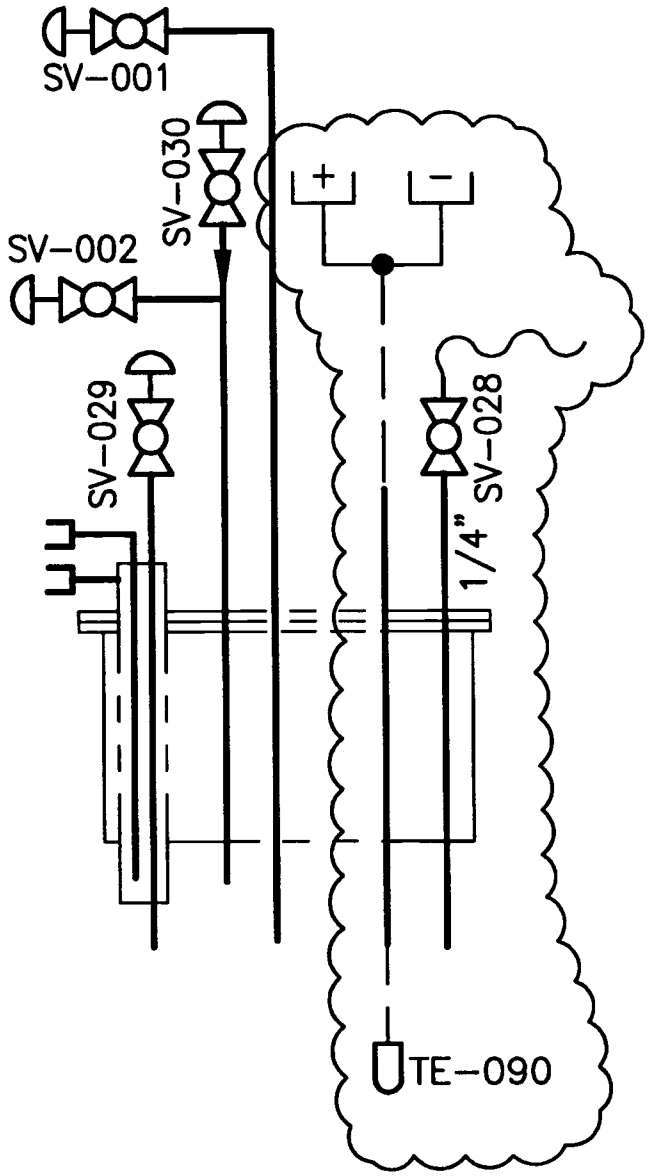

S	ENGINEERING CHANGE NOTICE	1a. ECN 726352 R 0
Page 1 of 12	☐ DM ☒ FM ☐ TM	1b. Proj. ECN - - R

2. Simple Modification ☒ Yes ☐ No	3. Design Inputs – For full ECNs, record information on the ECN-1 Form (not required for Simple Modifications)		4. Date 4/28/09
5. Originator's Name, Organization, MSIN, & Phone No. Robert S. Nicholson, BOSE, S5-25, 373-2986	6. PrHA Number No. 00795 R - 0 ☐ N/A	7. USQ Number No. TF - 09 - 0751 - D R - 0 ☐ N/A	8. Related ECNs ECN-726356-R0
9. Title AW FARM PRIMARY TANK SAMPLE POINTS	10. Bldg. / Facility No. 241-AW	11. Equipment / Component ID VAPOR PROBES, MITS	12. Approval Designator S
13. Engineering Documents/Drawings to be Changed (Incl. Sheet & Rev. Nos.) See Block 18.		14. Safety Designation ☐ SC ☐ SS ☒ GS ☐ N/A	15. Expedited/Off-Shift ECN? ☐ Yes ☒ No
16a. Work Package Number	16b. Modification Work Completed Responsible Engineer / Date	16c. Restored to Original Status (TM) N/A Responsible Engineer / Date	17. Fabrication Support ECN? ☐ Yes ☒ No

18. **Description of the Change** (Use ECN Continuation pages as needed)

Connect plastic sample tubes to the 101-AW MIT lower gas sample port and to the 1/4 inch sample tubes on the vapor probes at the other AW Farm tanks.

This ECN changes the following drawings:

H-14-020602 Sheet 1 Rev 7
H-14-020602 Sheet 2 Rev 5
H-14-020602 Sheet 3 Rev 5
H-14-020602 Sheet 4 Rev 4
H-14-020602 Sheet 5 Rev 4
H-14-020602 Sheet 6 Rev 4

19. **Justification of the Change** (Use ECN Continuation pages as needed)

Engineering Rework ☐ Yes ☒ No
Training Impact ☐ Yes ☒ No

This ECN corrects the five problems that are identified on Page 3.

20. **ECN Category**

☐ Direct Revision
☒ Supplemental
☐ Void/Cancel

ECN Type

☐ Supersedure
☐ Revision

21. **Distribution**

Name	MSIN	Name	MSIN
Brooks RL	S5-03		
Dunn RB	S5-07		

Release Stamp

JUN 15 2009
DATE:
STA: 4
HANFORD RELEASE
ID: 18

22. **Revisions Planned** (Include a brief description of the contents of each revision)

None

Note: All revisions shall have the approvals of the affected organizations as identified in block 12 "Approval Designator," on page 1 of this ECN.

23. **Commercial Grade Item Dedication Numbers** (associated with this design change)

N/A

24. **Engineering Data Transmittal Numbers** (associated with this design change, e.g., new drawings, new documents)

N/A

25. **Other Non Engineering (not in HDCS) documents that need to be modified due to this change**

Type of Document	Document Number	Update Completed On	Responsible Engineer (print/sign and date)
Alarm Response Procedure	N/A	N/A	N/A
Operations Procedure	TF-OPS-IHT-001		
Maintenance Procedure	N/A	N/A	N/A
None			

26. **Field Change Notice(s) Used?**

☐ Yes ☒ No

If Yes, Record Information on the ECN-2 Form, attach form(s), include a description of the interim resolution on ECN Page 1, block 18, and identify permanent changes.

NOTE: ECNs are required to record and approve all FCNs issued. If the FCNs have not changed the original design media then they are just incorporated into the design media via an ECN. If the FCN did change the original design media then the ECN will include the necessary engineering changes to the original design media.

27. **Design Verification Required?**

☐ Yes ☒ No

If Yes, as a minimum attach the one page checklist from TFC-ENG-DESIGN-P-17.

28. **Approvals**

	Facility/Project Signatures	Date		A/E Signatures	Date
Resp. Engineer	RS Nicholson	6/10/09	Originator/Design Agent		
Resp. Manager	WM Harty	6/10/09	Professional Engineer		
Quality Assurance			Project Engineer		
IS&H Engineer	WL Adams ~~KA Roueche~~	6/11/09	Quality Assurance		
NS&L Engineer			Safety		
Environ. Engineer			Designer		
Engineering Checker	DA Bragg	6/10/09	Environ. Engineer		
Other			Other		
Other			Other		
Other			DEPARTMENT OF ENERGY / OFFICE OF RIVER PROTECTION		
Other			Signature or a Control Number that tracks the Approval Signature		
Other					
Other			ADDITIONAL SIGNATURES		
Other					
Other					

Document/Drawing No.	Sheet	Revision

Problems:

The 101-AW MIT has 3 sampling ports, a pressure sensing port, and a water lance. Each of these 5 items has an isolation valve. Drawing H-14-020602 Sheet 1 shows the 5 isolation valves, but provides no indication of which valve goes to what item.

Plastic sampling tubes have been installed for several years on the 101-AW MIT and the vapor probes at tanks 102-AW through 106-AW. Drawing H-14-020602 sheets 1 through 6 shows that all of the ports on the MIT and vapor probes are capped.

The sampling points are not standard among the DST Farms. The plastic sample tubing is connected to the MIT lower gas samples ports at tanks 103-AN, 104-AN, 105-AN, and 103-SY, and to the MIT middle gas sample ports at tanks 101-AW and 101-SY. The plastic sampling tubing is connected to the ¼ inch sample tubes on the vapor probes in AN and AP Farms, and to one of the ½ inch sample tubes on the vapor probes at most other DSTs including 102-AW through 106-AW.

The implementing procedure for AC 5.10 is HNF-IP-1266 section 5.10. This procedure references Procedure TFC-ESHQ-FP-STD-05 for sampling locations, which requires the sample location to be at least 3 feet below the bottom of the riser or in the exhaust ventilation duct. All of the current gas sampling points in the AW Farm tanks are less than 3 feet below the bottom of the riser.

Sampling Procedures TF-OPS-IHT-007, TFC-OPS-IHT-004, and TFC-OPS-IHT-003 specify a travel time in the sample tube of 2 sec/ft and a sample rate of 0.5 Lpm. The ½ inch sample tubes on the vapor probes have a 0.035 inch wall thickness, and have a minimum travel time of 3.43 sec/ft at 0.5 Lpm. The 2 sec/ft at 0.5 Lpm travel time is bounding for the sample tubes on the MITs and the ¼ inch sample tubes on the vapor probes.

Solution:

Change drawing H-14-020602 sheet 1 to identify the 5 items on the MIT that are connected to the 5 isolation valves.

Change the 101-AW gas sampling point from the MIT middle gas sample port to the MIT lower gas sample port.

Change the gas sampling points at tanks 102-AW through 106-AW from the ½ inch tube with valve SV-030 to the ¼ inch tube with SV-028.

Note: An AutoCAD page may be used in place of this form (the header section items must be included on the AutoCAD page).

Document/Drawing No. Sheet Revision

Analysis:

The Champs equipment data base identifies the item on the 101-AW MIT that is connected to each of the isolation valves.

101-AW MIT PORT	ISOLATION VALVE
UPPER GAS SAMPLE PORT	AW101-WST-SV-142
LOWER GAS SAMPLE PORT	AW101-WST-SV-141
MIDDLE GAS SAMPLE PORT	AW101-WST-SV-140
PRESSURE PORT	AW101-WST-SV-139
WATER LANCE	AW101-WST-SV-138

Changing the 101-AW MIT sample point from the middle gas sample port to the lower gas sample port will make it consistent with 103-AN, 104-AN, 105-AN, and 103-SY. The 101-SY MIT sample point will be changed by another ECN from the middle gas sample port to the lower gas sample port. Then the lower gas sample port will be the standard sampling point for all DSTs with vapor probes.

Changing the sample ports on the vapor probes from the ½ inch tube with valve SV-030 to the ¼ inch tube with valve SV-028 will make them consistent with all of the tanks in AN and AP Farms that have vapor probes. Other ECNs will make the same change, where necessary, at DSTs in other farms that have vapor probes. Then the ¼ inch tube will be the standard sampling point for all DSTs with vapor probes.

The ¼ inch tubes at SV-028 on the vapor probes and the 101-AW MIT lower gas sample port satisfy the requirement in Procedure TFC-ESHQ-FP-STD-05 for sampling from a location that is at least 3 feet below the bottom of the riser. The values in the following table were calculated from dimensions and elevations on the following drawings:

- H-14-102410 sheets 1 and 2 for vapor probe sample tube lengths (13 ft for SV-030 17 ft 11 ½ in. for SV-028).
- H-2-85122 for the 101-AW MIT gas sample port elevations (672.40 ft for middle, 668.31 ft for lower)
- H-2-70374 for the primary tank bottom elevation (632.24 ft), height of the dome ellipse center above the primary tank bottom (31 ft 9 in.), dome ellipse dimensions (30 ft x 80 ft)
- H-14-010502 sheets 1 – 6 for riser radii (28 feet for all tanks) and riser elevations (687.75 ft for 105-AW, 686.33 for the other tanks)

Tank	Distance from bottom of riser to current sample tube inlet (ft)	Distance from bottom of riser to new sample tube inlet (ft)
101-AW	2.30	6.39
102-AW	1.37	6.33
103-AW	1.37	6.33
104-AW	1.37	6.33
105-AW	-0.05	4.91
106-AW	1.37	6.33

Note: An AutoCAD page may be used in place of this form (the header section items must be included on the AutoCAD page).

Document/Drawing No. Sheet Revision

The 2 sec/ft at 0.5 Lpm travel time that is specified in sampling Procedures TF-OPS-IHT-007, TFC-OPS-IHT-004, and TFC-OPS-IHT-003 is bounding for the sample tubes on the MITs and the ¼ inch sample tubes on the vapor probes. The values in the following table were calculated using vapor probe sample tube dimensions from H-2-102410 sheets 1 and 2 and MIT sample tube dimensions from H-2-85145.

	OD (in.)	Wall thickness (in.)	Travel time (sec/ft)
1/4 inch tubes at SV-028 on vapor probes	1/4	0.035	0.60
1/2 inch tubes at SV-030 on vapor probes	1/2	0.035	3.43
MIT sample tubes	0.375	0.035	1.72

Note: An AutoCAD page may be used in place of this form (the header section items must be included on the AutoCAD page).

WAS:

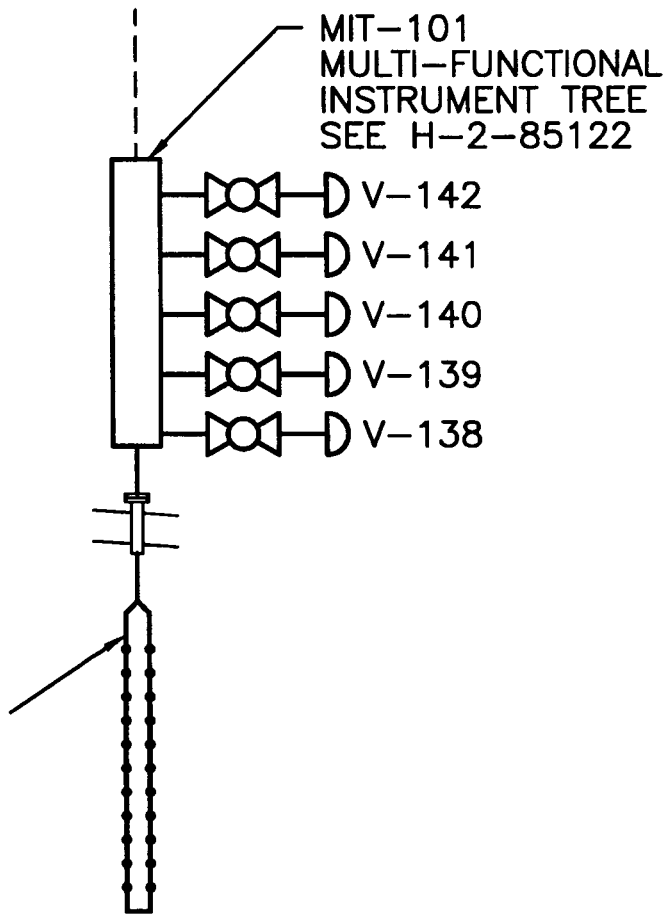
MIT-101
MULTI-FUNCTIONAL
INSTRUMENT TREE
SEE H-2-85122
V-142
V-141
V-140
V-139
V-138

IS:

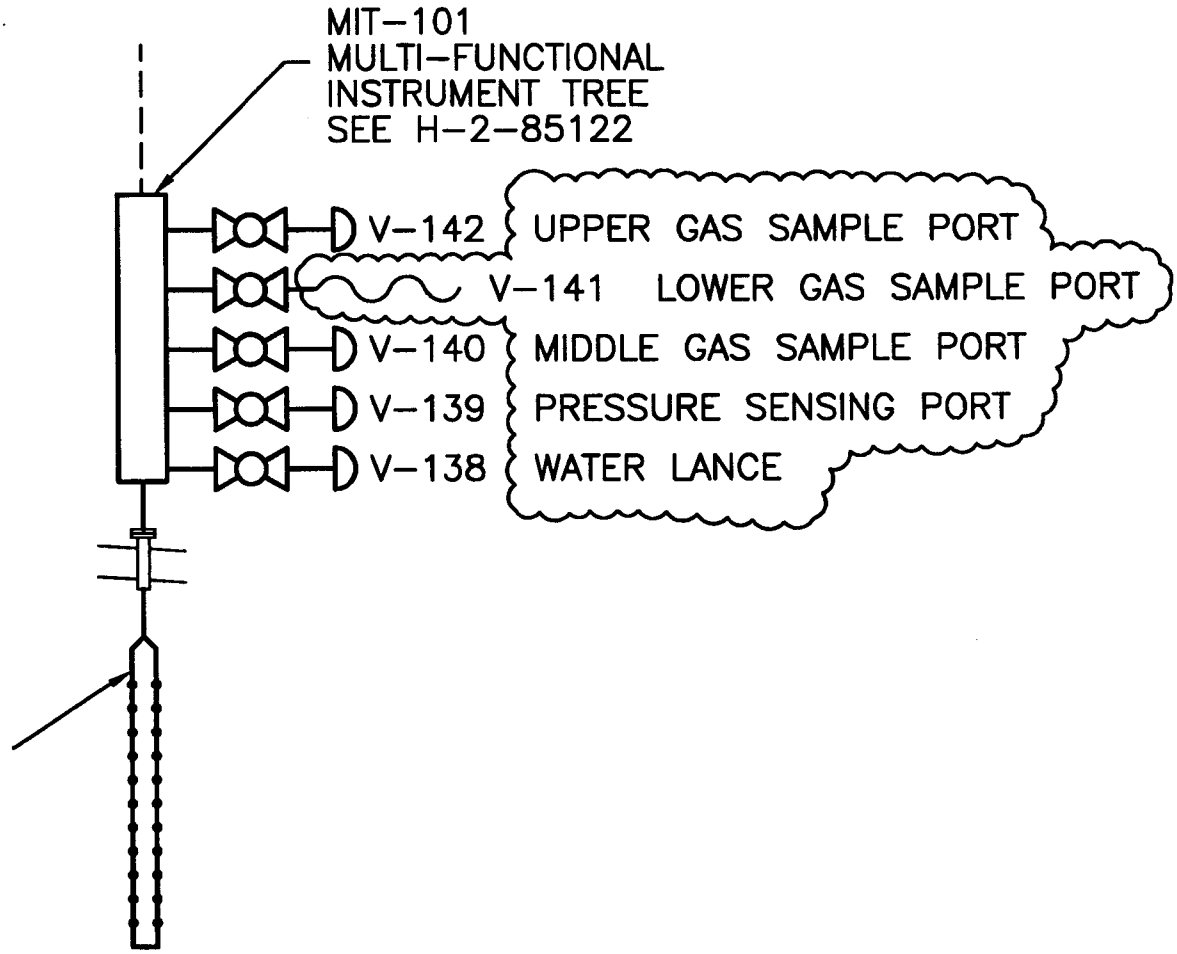
MIT-101
MULTI-FUNCTIONAL
INSTRUMENT TREE
SEE H-2-85122
V-142
UPPER GAS SAMPLE PORT
V-141
LOWER GAS SAMPLE PORT
V-140
MIDDLE GAS SAMPLE PORT
V-139
PRESSURE SENSING PORT
V-138
WATER LANCE

WAS:

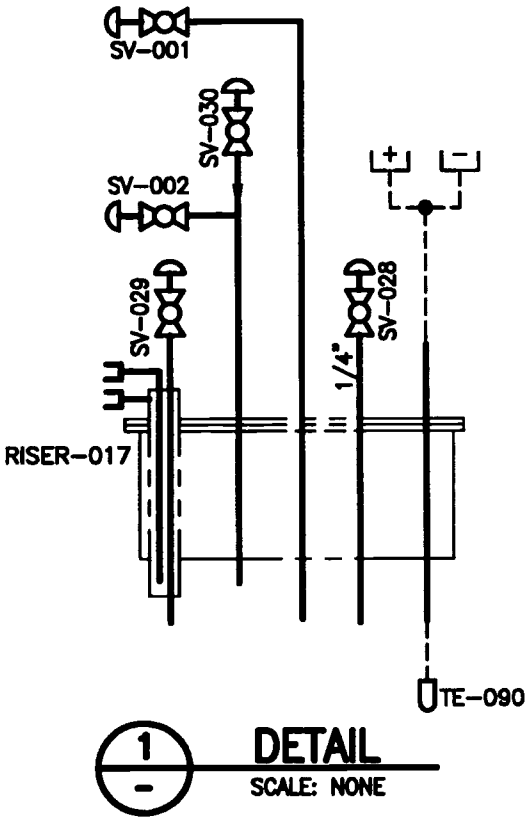

1 DETAIL
SCALE: NONE

IS:

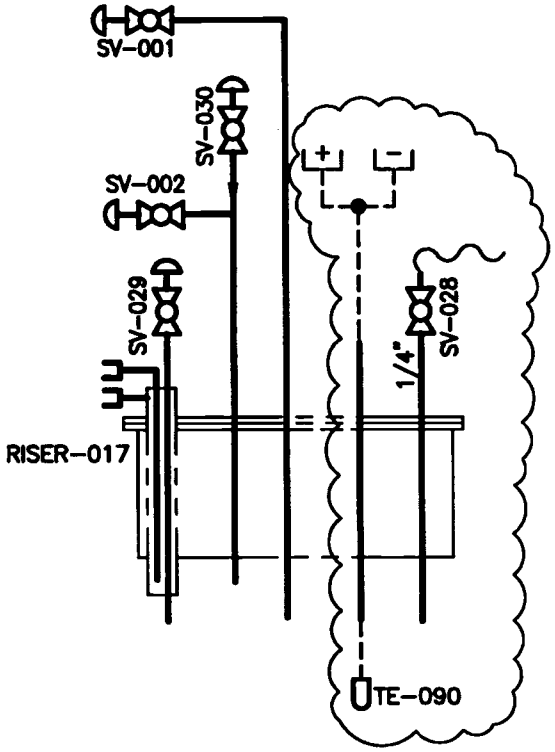

1 DETAIL
SCALE: NONE

WAS:

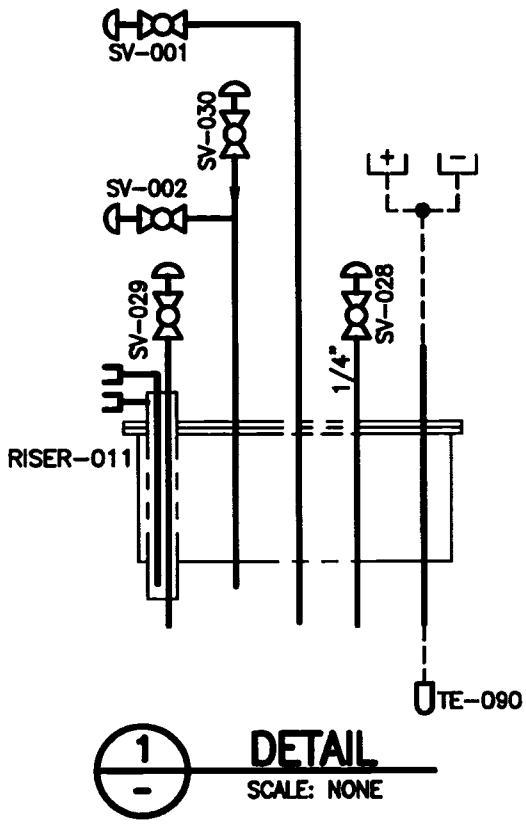
SV-001
SV-030
SV-002
SV-029
SV-028
1/4"
RISER-011
TE-090
1
DETAIL
SCALE: NONE

IS:

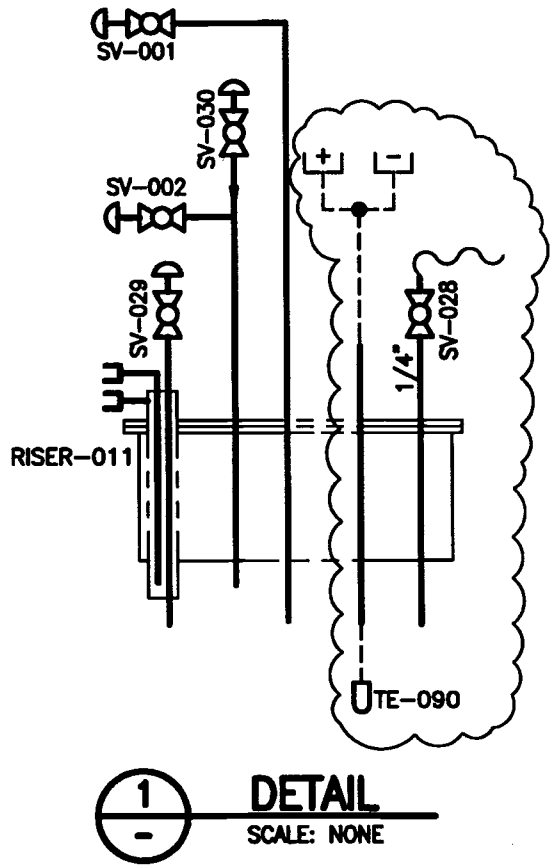
SV-001
SV-030
SV-002
SV-029
SV-028
1/4"
RISER-011
TE-090
1
DETAIL
SCALE: NONE

1a. ECN-726352-R0

1b. Proj. ECN - - R

Document/Drawing No. H-14-020602 Sheet 4 Revision 4

WAS:

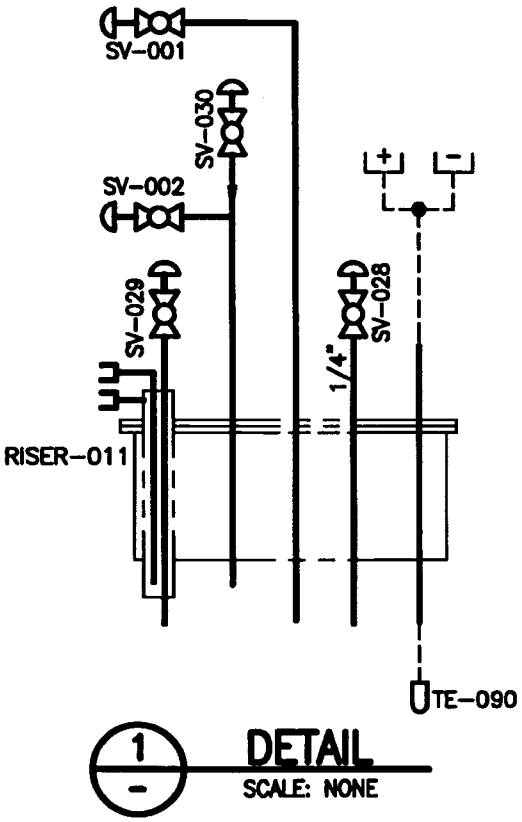

1 DETAIL
SCALE: NONE

IS:

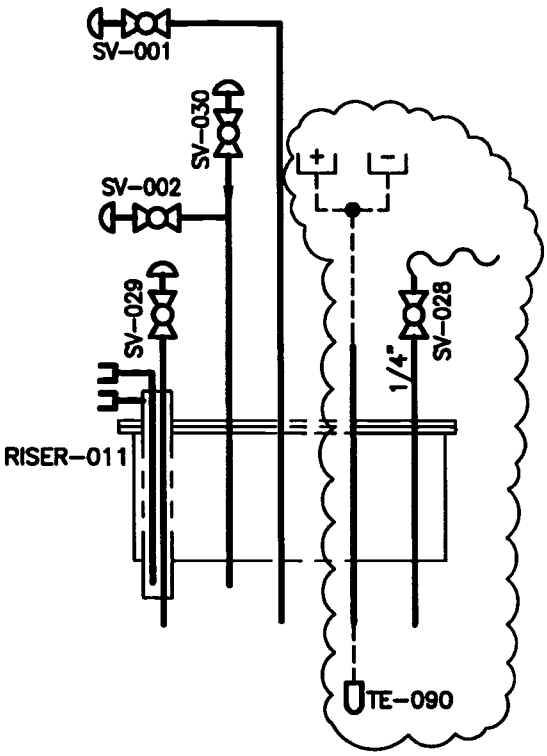

1 DETAIL
SCALE: NONE

WAS:

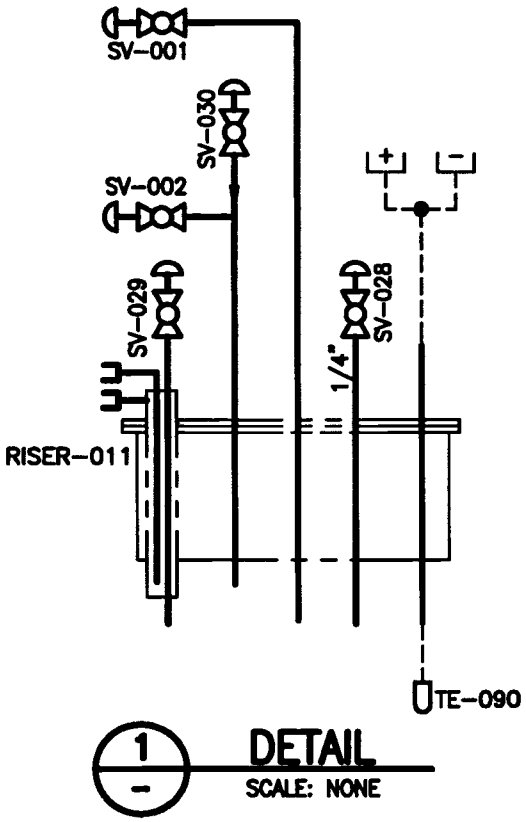
SV-001
SV-030
SV-002
SV-029
SV-028
1/4"
RISER-011
TE-090
+
-
1
DETAIL
SCALE: NONE

IS:

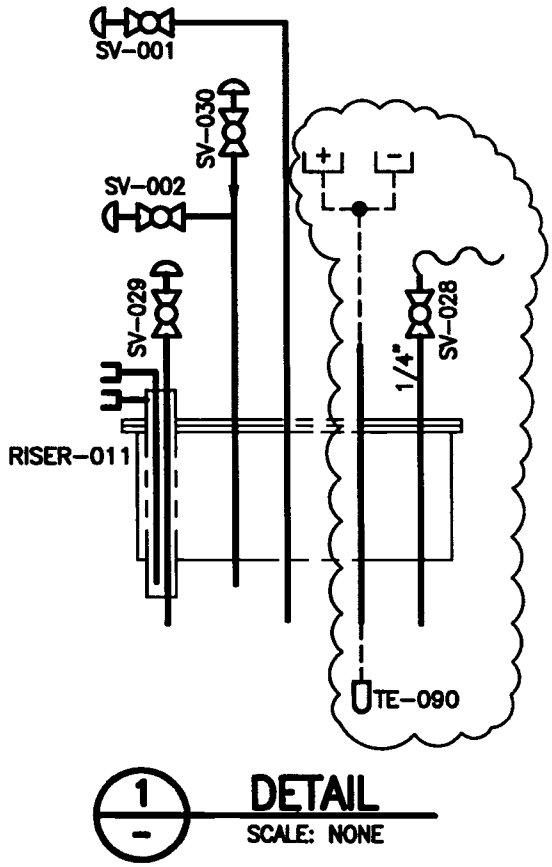
SV-001
SV-030
SV-002
SV-029
SV-028
1/4"
RISER-011
TE-090
+
-
1
DETAIL
SCALE: NONE

WAS:

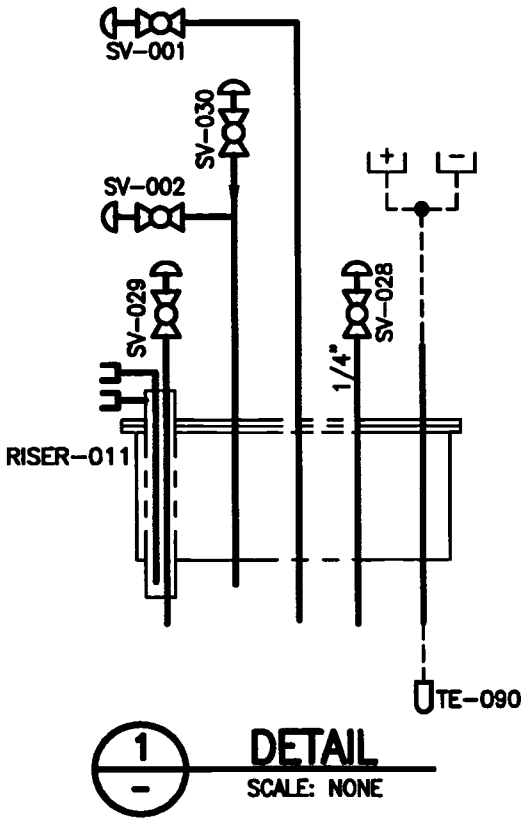
SV-001
SV-030
SV-002
SV-029
SV-028
1/4"
RISER-011
TE-090
1
DETAIL
SCALE: NONE

IS:

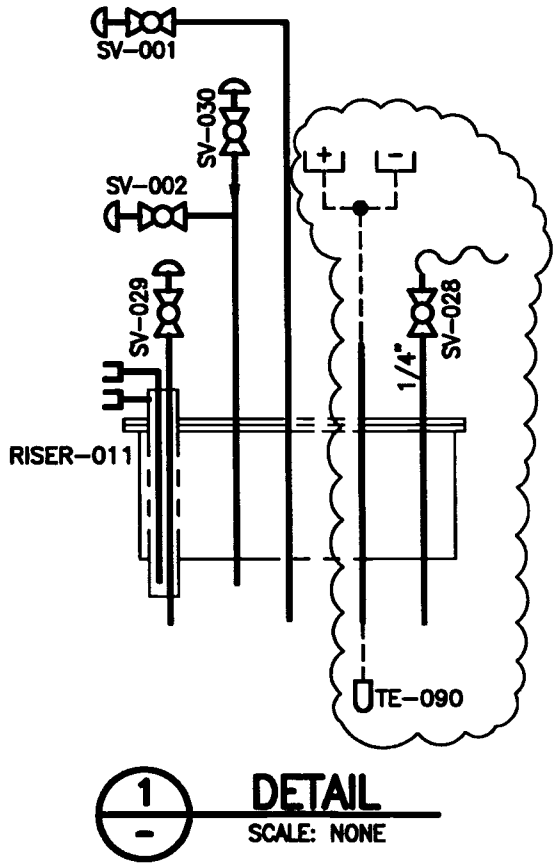
SV-001
SV-030
SV-002
SV-029
SV-028
1/4"
RISER-011
TE-090
1
DETAIL
SCALE: NONE

S	ENGINEERING CHANGE NOTICE	1a. ECN 726357 R 0
Page 1 of 6	☐ DM ☒ FM ☐ TM	1b. Proj. ECN - - R

2. Simple Modification ☒ Yes ☐ No	3. Design Inputs – For full ECNs, record information on the ECN-1 Form (not required for Simple Modifications)		4. Date 5/4/09
5. Originator's Name, Organization, MSIN, & Phone No. Robert S. Nicholson, BOSE, S5-25, 373-2986	6. PrHA Number No. 00795 R - 0 ☐ N/A	7. USQ Number No. TF - 09 - 0751 - D R - 0 ☐ N/A	8. Related ECNs ECN-726356-R0
9. Title AY FARM PRIMARY TANK SAMPLE PORTS	10. Bldg. / Facility No. 241-AY	11. Equipment / Component ID VAPOR PROBES	12. Approval Designator S
13. Engineering Documents/Drawings to be Changed (Incl. Sheet & Rev. Nos.) H-14-020606 Sheet 1 Rev 10, H-14-020606 Sheet 2 Rev 13		14. Safety Designation ☐ SC ☐ SS ☒ GS ☐ N/A	15. Expedited/Off-Shift ECN? ☐ Yes ☒ No
16a. Work Package Number	16b. Modification Work Completed (Responsible Engineer / Date)	16c. Restored to Original Status (TM) N/A (Responsible Engineer / Date)	17. Fabrication Support ECN? ☐ Yes ☒ No

18. **Description of the Change** (Use ECN Continuation pages as needed)

Connect plastic sample tubes to the 1/4 inch sample tubes on the vapor probes at 101-AY and 102-AY.

See page 3 for background, problems, solutions, and analysis sections.

19. **Justification of the Change** (Use ECN Continuation pages as needed)

Engineering Rework ☐ Yes ☒ No
Training Impact ☐ Yes ☒ No

This ECN corrects the problems that are identified on Page 3.

20. **ECN Category**

☐ Direct Revision
☒ Supplemental
☐ Void/Cancel

ECN Type

☐ Supersedure
☐ Revision

21. **Distribution**

Name	MSIN	Name	MSIN
Brooks RL	S5-03		
Dunn RB	S5-07		

Release Stamp

DATE: JUN 15 2009
STA. 4
HANFORD RELEASE
ID: 18

ENGINEERING CHANGE NOTICE	1a. ECN 726357 R 0
Page 2 of 6 ☐ DM ☒ FM ☐ TM	1b. Proj. ECN - - R

22. Revisions Planned (Include a brief description of the contents of each revision)

None

Note: All revisions shall have the approvals of the affected organizations as identified in block 12 "Approval Designator," on page 1 of this ECN.

23. **Commercial Grade Item Dedication Numbers** (associated with this design change)	24. **Engineering Data Transmittal Numbers** (associated with this design change, e.g., new drawings, new documents)
N/A	N/A

25. Other Non Engineering (not in HDCS) documents that need to be modified due to this change

Type of Document	Document Number	Update Completed On	Responsible Engineer (print/sign and date)
Alarm Response Procedure	N/A	N/A	N/A
Operations Procedure	TF-OPS-IHT-001		
Maintenance Procedure	N/A	N/A	N/A
None			

26. **Field Change Notice(s) Used?**	NOTE: ECNs are required to record and approve all FCNs issued. If the FCNs have not changed the original design media then they are just incorporated into the design media via an ECN. If the FCN did change the original design media then the ECN will include the necessary engineering changes to the original design media.	27. **Design Verification Required?**
☐ **Yes** ☒ **No** If Yes, Record Information on the ECN-2 Form, attach form(s), include a description of the interim resolution on ECN Page 1, block 18, and identify permanent changes.		☐ **Yes** ☒ **No** If Yes, as a minimum attach the one page checklist from TFC-ENG-DESIGN-P-17.

28. Approvals

	Facility/Project Signatures	Date		A/E Signatures	Date
Resp. Engineer	RS Nicholson	6/10/09	Originator/Design Agent		
Resp. Manager	WM Harty	6/10/09	Professional Engineer		
Quality Assurance			Project Engineer		
IS&H Engineer	WK Adams ~~KA Roueche~~	6/11/09	Quality Assurance		
NS&L Engineer			Safety		
Environ. Engineer			Designer		
Engineering Checker	GR Tardiff	6/10/09	Environ. Engineer		
Other	Project Eng.	6-11-09	Other		
Other			Other		
Other			DEPARTMENT OF ENERGY / OFFICE OF RIVER PROTECTION		
Other			Signature or a Control Number that tracks the Approval Signature		
Other					
Other			ADDITIONAL SIGNATURES		
Other					
Other					

Document/Drawing No.	Sheet	Revision

Background:

Dome space gas samples are currently taken from 101-AY and 102-AY using the ½ inch heated sample tubes on the vapor probes. These are the sample tubes with isolation valve SV-029.

Problems:

A plastic sampling tube has been connected to the 101-AY vapor probe for several years. Drawing H-14-020606 sheet 1 shows that all of the ports on the 101-AY vapor sample probe are capped.

The dome space gas sampling points are not standard among the DST Farms. The plastic sampling tubing is connected to the ¼ inch sample tubes on the vapor probes in AN and AP Farms, and to one of the ½ inch sample tubes on the vapor probes at most other DSTs.

Sampling Procedures TF-OPS-IHT-007, TFC-OPS-IHT-004, and TFC-OPS-IHT-003 specify a travel time in the sample tube of 2 sec/ft and a sample rate of 0.5 Lpm. The ½ inch sample tubes on the vapor probes have a 0.035 inch wall thickness, and have a minimum travel time of 3.43 sec/ft at 0.5 Lpm.

Solution:

Change the sampling points at tanks 101-AY and 102-AY from the ½ inch heated vapor sample tube with valve SV-029 to the ¼ inch tube with valve SV-028.

Analysis:

Changing the sample ports on the 101-AY and 102-AY vapor probes from the ½ inch tube with valve SV-029 to the ¼ inch tube with valve SV-028 will make them consistent with all of the tanks in AN and AP Farms that have vapor probes. Other ECNs will make the same change, where necessary, at DSTs in other farms that have vapor probes. Then the ¼ inch tube will be the standard sampling point for all DSTs with vapor probes.

The implementing procedure for AC 5.10 is HNF-IP-1266 section 5.10. This procedure references Procedure TFC-ESHQ-FP-STD-05 for sampling locations, which requires the sample location to be at least 3 feet below the bottom of the riser or in the exhaust ventilation duct. The ¼ inch sample tubes with valve SV-028 and the ½ inch heated sample tubes with valve SV-029 terminate at the same level and both satisfy the 3 foot requirement. The values in the following table were calculated from dimensions and elevations on the following drawings:

- H-14-102410 sheets 1 and 2 for lengths of the ¼ inch sample tubes and the ½ inch heated sample tubes on the vapor probes (17 ft 11 ½ in.).
- H-2-64449 for the AY Farm primary tank bottom elevations (623.07 ft), height of the dome ellipse center above the primary tank bottom (31 ft 9 1/2 in.), and dome ellipse dimensions (30 ft x 80 ft)

Note: An AutoCAD page may be used in place of this form (the header section items must be included on the AutoCAD page).

Document/Drawing No. Sheet Revision

- H-14-010506 sheets 1 and 3 for the AY Farm riser radii (12 ft 6 in.) and riser elevations.

Tank	Distance from bottom of riser to current sample tube inlet (½ inch heated sample tube with valve SV-029) (ft)	Distance from bottom of riser to new sample tube inlet (1/4 inch sample tube with valve SV-028) (ft)
101-AY	7.14	7.14
102-AY	7.10	7.10

The 2 sec/ft at 0.5 Lpm travel time that is specified in sampling Procedures TF-OPS-IHT-007, TFC-OPS-IHT-004, and TFC-OPS-IHT-003 is bounding for the ¼ inch sample tubes. The values in the following table were calculated using vapor probe sample tube dimensions from H-2-102410 sheets 1 and 2.

	OD (in.)	Wall thickness (in.)	Travel time (sec/ft)
1/4 inch tubes with valve SV-028	1/4	0.035	0.60
1/2 inch tubes with valve SV-029	1/2	0.035	3.43

Note: An AutoCAD page may be used in place of this form (the header section items must be included on the AutoCAD page).

1a. ECN-726357-R0

1b. Proj. ECN - - R

Document/Drawing No. H-14-020606 Sheet 1 Revision 10

WAS:

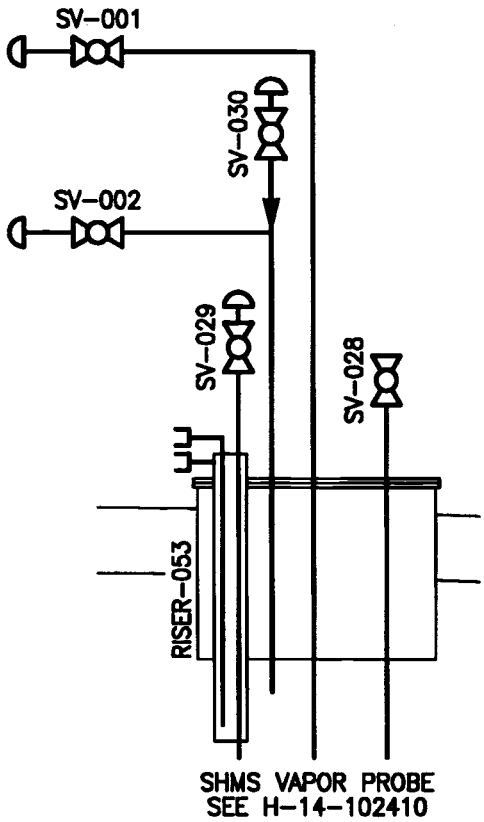

IS:

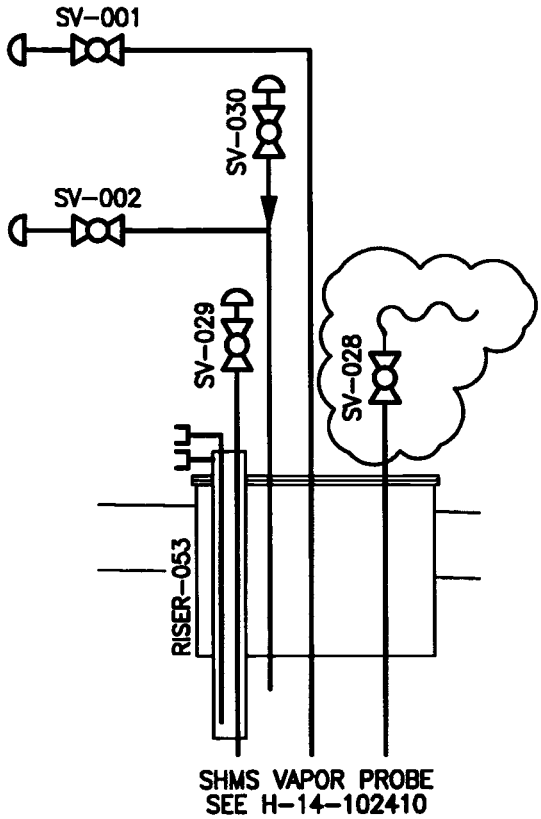

1a. ECN-726357-R0

1b. Proj. ECN - - R

Document/Drawing No. H-14-020606 Sheet 2 Revision 13

WAS:

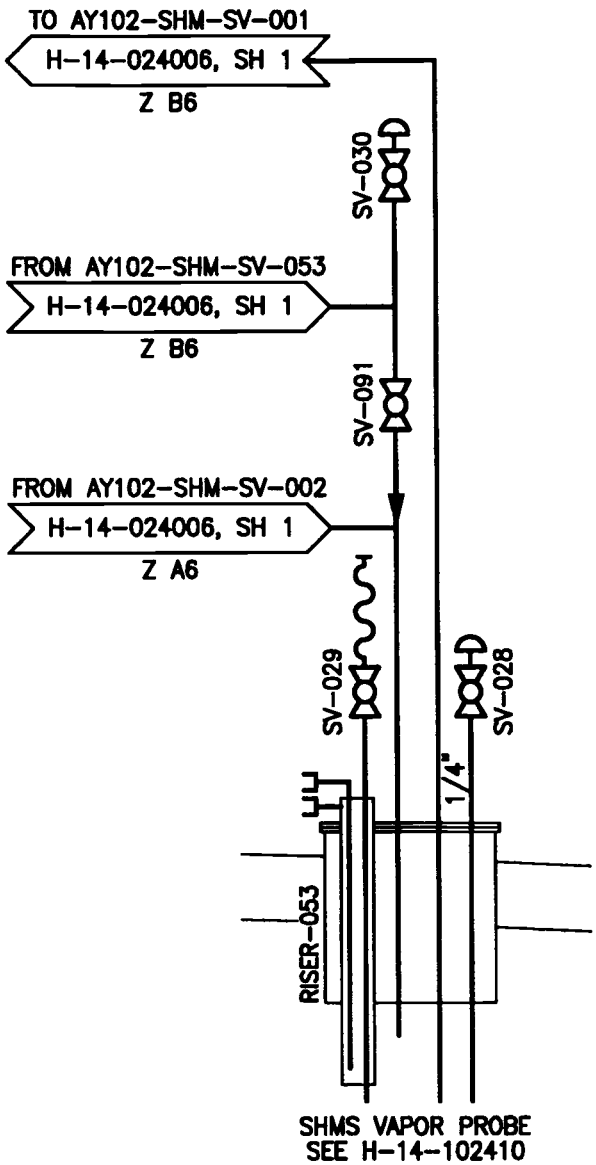

IS:

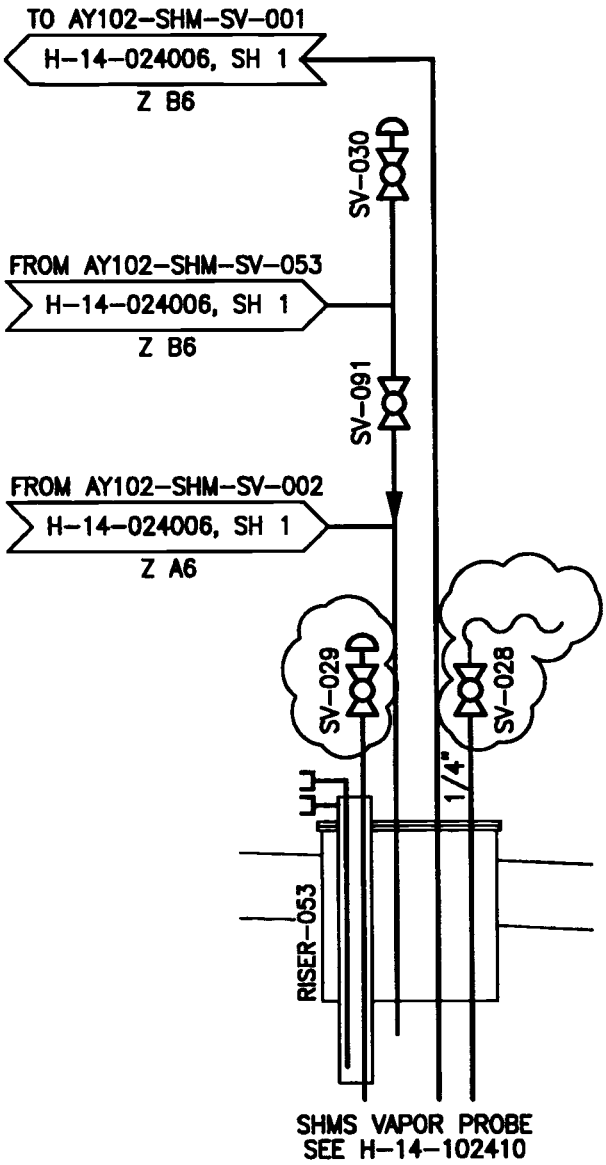

S ENGINEERING CHANGE NOTICE	1a. ECN 726358 R 0
Page 1 of 6 ☐ DM ☒ FM ☐ TM	1b. Proj. ECN - - R

2. Simple Modification ☒ Yes ☐ No	3. Design Inputs – For full ECNs, record information on the ECN-1 Form (not required for Simple Modifications)		4. Date 5/4/09
5. Originator's Name, Organization, MSIN, & Phone No. Robert S. Nicholson, BOSE, S5-25, 373-2986	6. PrHA Number No. 00795 R - 0 ☐ N/A	7. USQ Number No. TF - 09 - 0751 - D R - 0 ☐ N/A	8. Related ECNs ECN-726356-R0
9. Title AZ FARM PRIMARY TANK SAMPLE PORTS	10. Bldg. / Facility No. 241-AZ	11. Equipment / Component ID VAPOR PROBES	12. Approval Designator S
13. Engineering Documents/Drawings to be Changed (Incl. Sheet & Rev. Nos.) H-14-020607 Sheet 1 Rev 16, H-14-020607 Sheet 2 Rev 13		14. Safety Designation ☐ SC ☐ SS ☒ GS ☐ N/A	15. Expedited/Off-Shift ECN? ☐ Yes ☒ No
16a. Work Package Number	16b. Modification Work Completed Responsible Engineer / Date	16c. Restored to Original Status (TM) N/A Responsible Engineer / Date	17. Fabrication Support ECN? ☐ Yes ☒ No

18. **Description of the Change** (Use ECN Continuation pages as needed)

Connect plastic sample tubes to the 1/4 inch sample tubes on the vapor probes at 101-AZ and 102-AZ.

See page 3 for background, problems, solutions, and analysis sections.

19. **Justification of the Change** (Use ECN Continuation pages as needed)

Engineering Rework ☐ Yes ☒ No
Training Impact ☐ Yes ☒ No

This ECN corrects the problems that are identified on Page 3.

20. **ECN Category**

☐ Direct Revision
☒ Supplemental
☐ Void/Cancel

ECN Type

☐ Supersedure
☐ Revision

21. **Distribution**

Name	MSIN	Name	MSIN
Brooks RL	S5-03		
Dunn RB	S5-07		

Release Stamp

DATE: JUN 15 2009
STA: 4
HANFORD RELEASE
ID: 18

ENGINEERING CHANGE NOTICE	1a. ECN 726358 R 0
Page 2 of 6 ☐ DM ☒ FM ☐ TM	1b. Proj. ECN - - R

22. **Revisions Planned** (Include a brief description of the contents of each revision)

None

Note: All revisions shall have the approvals of the affected organizations as identified in block 12 "Approval Designator," on page 1 of this ECN.

23. **Commercial Grade Item Dedication Numbers** (associated with this design change)	24. **Engineering Data Transmittal Numbers** (associated with this design change, e.g., new drawings, new documents)
N/A	N/A

25. **Other Non Engineering (not in HDCS) documents that need to be modified due to this change**

Type of Document	Document Number	Update Completed On	Responsible Engineer (print/sign and date)
Alarm Response Procedure	N/A	N/A	N/A
Operations Procedure	TF-OPS-IHT-001		
Maintenance Procedure	N/A	N/A	N/A
None			

26. **Field Change Notice(s) Used?**		27. **Design Verification Required?**
☐ Yes ☒ No If Yes, Record Information on the ECN-2 Form, attach form(s), include a description of the interim resolution on ECN Page 1, block 18, and identify permanent changes.	NOTE: ECNs are required to record and approve all FCNs issued. If the FCNs have not changed the original design media then they are just incorporated into the design media via an ECN. If the FCN did change the original design media then the ECN will include the necessary engineering changes to the original design media.	☐ Yes ☒ No If Yes, as a minimum attach the one page checklist from TFC-ENG-DESIGN-P-17.

28. **Approvals**

Facility/Project Signatures		Date	A/E Signatures		Date
Resp. Engineer	RS Nicholson	6/10/09	Originator/Design Agent		
Resp. Manager	WM Harty	6/10/09	Professional Engineer		
Quality Assurance			Project Engineer		
IS&H Engineer	~~KA Rodeche~~ WL Adams	6/11/09	Quality Assurance		
NS&L Engineer			Safety		
Environ. Engineer			Designer		
Engineering Checker	GR Tardiff	6/10/09	Environ. Engineer		
Other	Project Eng.	6-11-09	Other		
Other			Other		
Other			DEPARTMENT OF ENERGY / OFFICE OF RIVER PROTECTION		
Other			Signature or a Control Number that tracks the Approval Signature		
Other					
Other			ADDITIONAL SIGNATURES		
Other					
Other					

Document/Drawing No. Sheet Revision

Background:

Dome space gas samples are currently taken from 101-AZ using the ¼ inch sample tube with valve SV-027 on the vapor probe.

Dome space gas samples are currently taken from 102-AZ using the ½ inch heated sample tube with valve SV-029 on the vapor probe.

Problems:

Plastic sampling tube has been connected to the 101-AZ and 102-AZ vapor probes for several years. Drawing H-14-020607 sheets 1 and 2 show that all of the ports on the vapor sample probes are capped.

The dome space gas sampling points are not standard among the DST Farms. The plastic sampling tubing is connected to the ¼ inch sample tubes on the vapor probes in AN and AP Farms, and to one of the ½ inch sample tubes on the vapor probes at most other DSTs.

Sampling Procedures TF-OPS-IHT-007, TFC-OPS-IHT-004, and TFC-OPS-IHT-003 specify a travel time in the sample tube of 2 sec/ft and a sample rate of 0.5 Lpm. The ½ inch sample tube with valve SV-029 on the 102-AZ vapor probe has a 0.035 inch wall thickness, and a minimum travel time of 3.43 sec/ft at 0.5 Lpm.

Drawing H-14-020607 sheet 1 shows that valve SV-027 is located on the tube which contains a thermocouple. SV-027 is on the sample tube, and there is no valve on the tube with the thermocouple.

Drawing H-14-020607 sheet 1 does not show the ¼ inch sample tube on the vapor probe.

Solution:

Add the ¼ inch sample tube to the 101-AZ vapor probe on Drawing H-14-020607 sheet 1.

Move valve SV-027 on the 101-AZ vapor probe from the thermocouple tube to the ¼ inch sample tube on Drawing H-14-020607 sheet 1.

Show plastic sample tubing connected to the ¼ inch sample tubes on the 101-AZ and 102-AZ vapor probes.

Analysis:

Changing the 102-AZ sample port on the vapor probe from the ½ inch heated sample tube to the ¼ inch sample tube will make it consistent with 101-AZ and the tanks in AN and AP Farms that have vapor probes. Other ECNs will make the same change, where necessary, at DSTs in other farms that have vapor probes. Then the ¼ inch tube will be the standard sampling point for all DSTs with vapor probes.

Note: An AutoCAD page may be used in place of this form (the header section items must be included on the AutoCAD page).

Document/Drawing No. Sheet Revision

The implementing procedure for AC 5.10 is HNF-IP-1266 section 5.10. This procedure references Procedure TFC-ESHQ-FP-STD-05 for sampling locations, which requires the sample location to be at least 3 feet below the bottom of the riser or in the exhaust ventilation duct. The ¼ inch sample tubes and the ½ inch heated sample tubes terminate at the same level and both satisfy the 3 foot requirement. The values in the following table were calculated from dimensions and elevations on the following drawings:

- H-14-102410 sheets 1 and 2 for the sample tube lengths (17 ft 11 ½ in. for both the ¼ inch sample tubes and the ½ inch heated sample tubes).
- H-2-67317 for the AZ Farm primary tank bottom elevations (616.5 ft), height of the dome ellipse center above the primary tank bottom (31 ft 9 1/2 in.), and dome ellipse dimensions (30 ft x 80 ft)
- H-14-010507 sheets 1 and 3 for the AZ Farm riser radii (12 ft 6 in.) and riser elevations.

Tank	Distance from bottom of riser to sample tube inlet (ft)
101-AZ	8.13
102-AZ	7.83

The 2 sec/ft at 0.5 Lpm travel time that is specified in sampling Procedures TF-OPS-IHT-007, TFC-OPS-IHT-004, and TFC-OPS-IHT-003 is bounding for the ¼ inch sample tubes. The values in the following table were calculated using vapor probe sample tube dimensions from H-2-102410 sheets 1 and 2.

	OD (in.)	Wall thickness (in.)	Travel time (sec/ft)
1/4 inch sample tubes	1/4	0.035	0.60
Heated 1/2 inch sample tubes	1/2	0.035	3.43

Note: An AutoCAD page may be used in place of this form (the header section items must be included on the AutoCAD page).

Document/Drawing No. H-14-020607 Sheet 1 Revision 16

WAS:

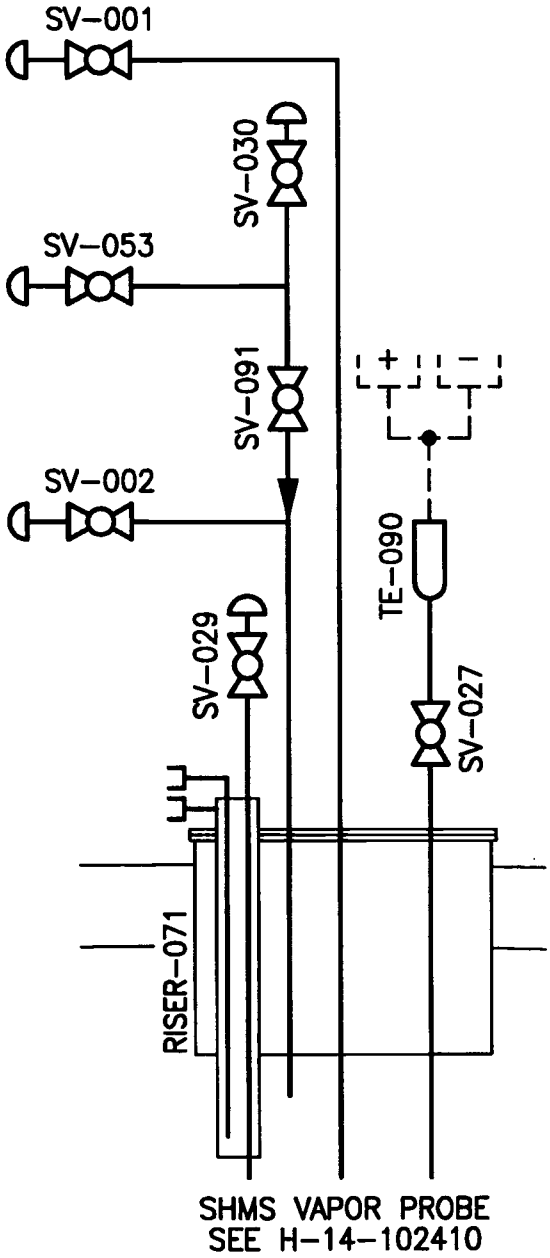

IS:

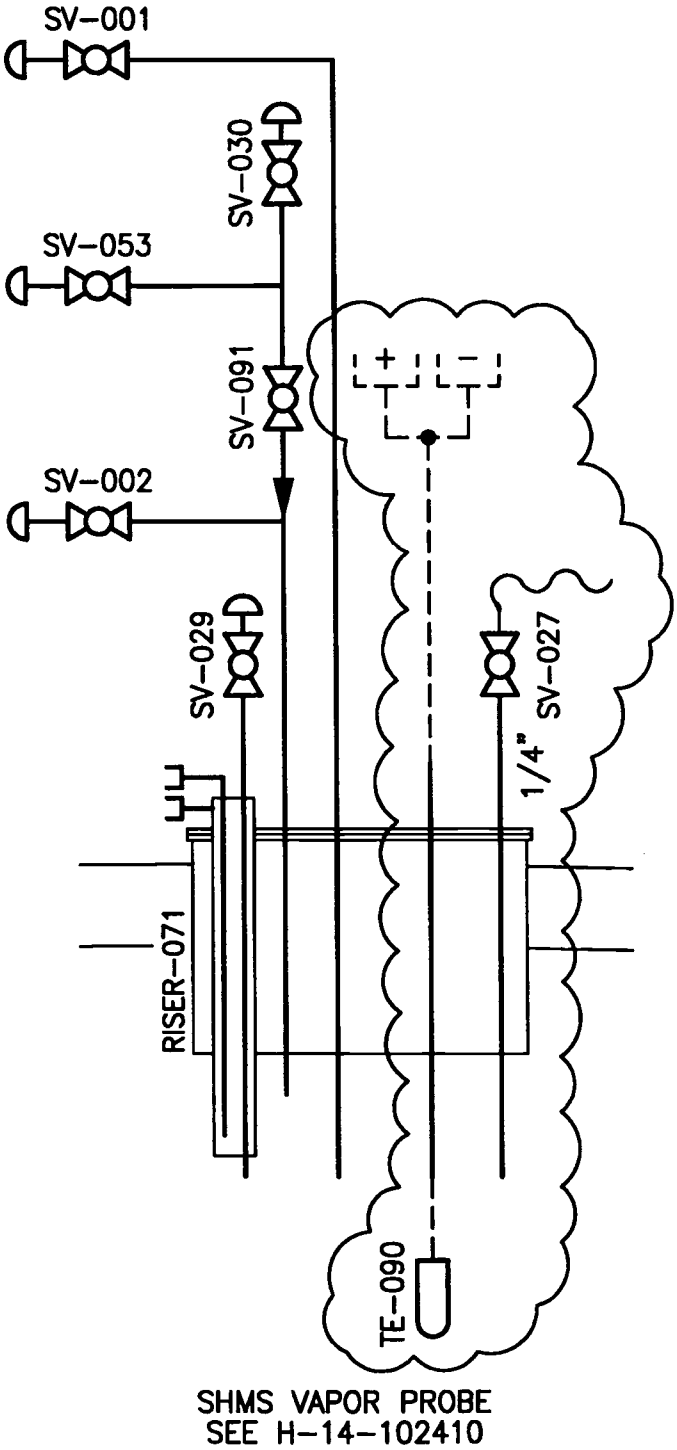

Document/Drawing No. H-14-020607 Sheet 2 Revision 13

WAS:

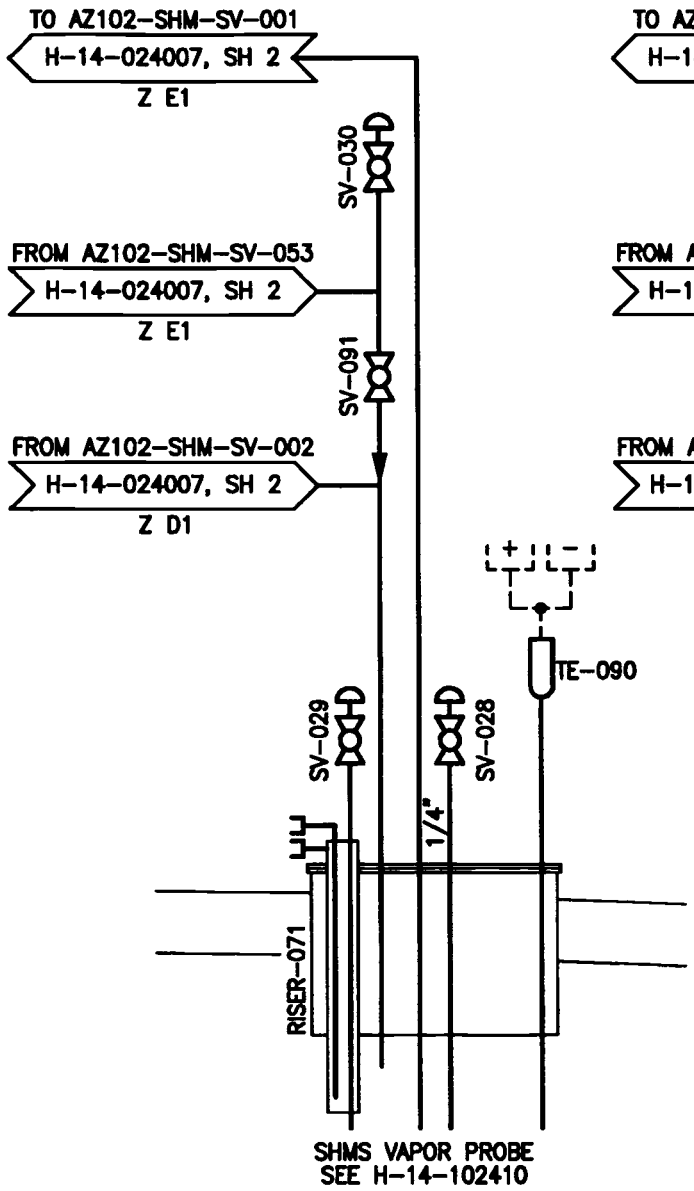

IS:

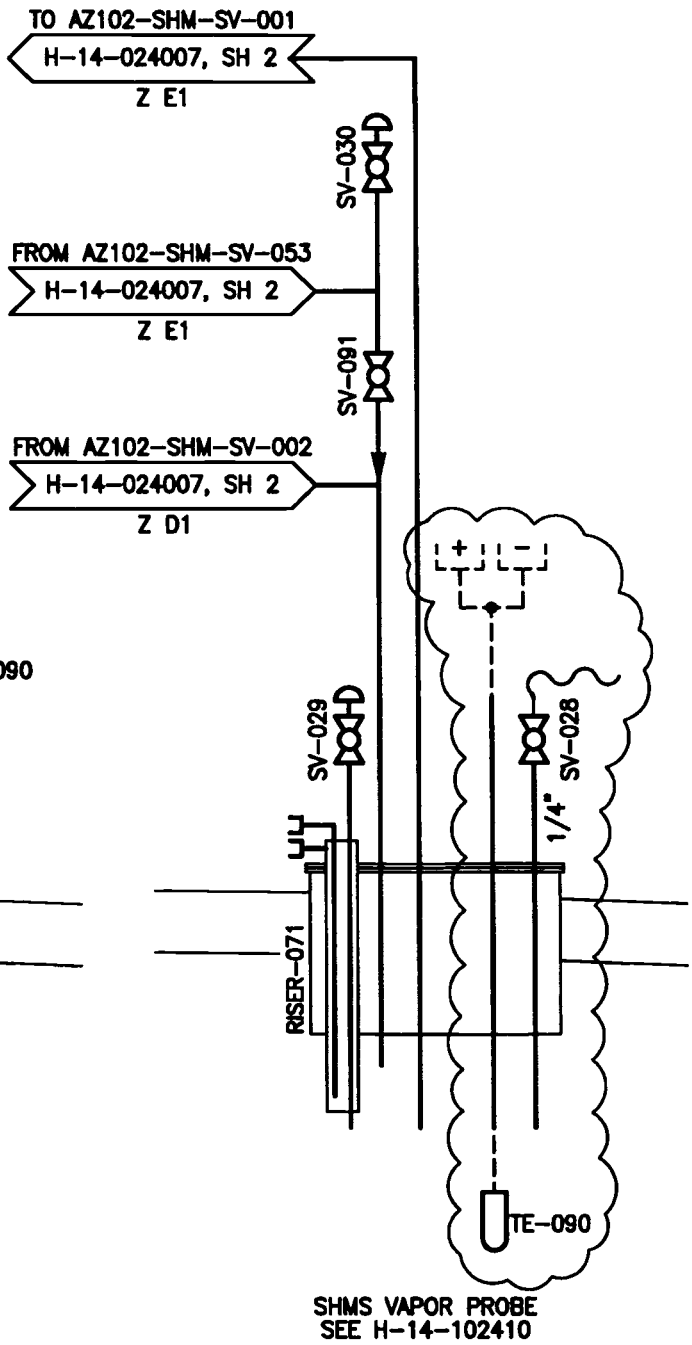

S ENGINEERING CHANGE NOTICE	1a. ECN 726356 R 0
Page 1 of 4 ☒ DM ☐ FM ☐ TM	1b. Proj. ECN - - R

2. Simple Modification ☒ Yes ☐ No	3. Design Inputs – For full ECNs, record information on the ECN-1 Form (not required for Simple Modifications)		4. Date 4/27/09
5. Originator's Name, Organization, MSIN, & Phone No. Robert S. Nicholson, BOSE, S5-25, 373-2986	6. PrHA Number No. 00795 R - 0 ☐ N/A	7. USQ Number No. TF - 09 - 0751 - D R - 0 ☐ N/A	8. Related ECNs ECN-726352-R0, 726357-R0, 726358-R0, 726359-R0, 726360-R0
9. Title MIT AND VAPOR PROBE SAMPLE TUBE CONNECTIONS	10. Bldg. / Facility No. 241-AN, AP, AW, AY, AZ, SY	11. Equipment / Component ID VAPOR PROBES, MITS	12. Approval Designator S
13. Engineering Documents/Drawings to be Changed (Incl. Sheet & Rev. Nos.) H-14-102410 SHEET 2 REV 1, H-2-85141 SHEET 1 REV 5		14. Safety Designation ☐ SC ☐ SS ☒ GS ☐ N/A	15. Expedited/Off-Shift ECN? ☐ Yes ☒ No
16a. Work Package Number N/A	16b. Modification Work Completed N/A Responsible Engineer / Date	16c. Restored to Original Status (TM) N/A Responsible Engineer / Date	17. Fabrication Support ECN? ☐ Yes ☒ No

18. Description of the Change (Use ECN Continuation pages as needed)

Specify allowed metal fittings and tube sections for connecting plastic sample tubes permanently to the sample ports on the MITs and vapor sample probes.

Problem: Each DST has plastic sample tubing permanently connected to a sample port on the vapor probe or MIT. The drawings show that all of the ports on the MITs and vapor probes are capped.

Solution: Specify the M-31 pipe code on Drawing H-2-31750 Sheet 31 for metal fittings and tube sections that are used to permanently connect plastic sample tubes to the sample ports on the MITs and vapor probes.

Analysis: The vapor probes and MITs are stainless steel. The M-31 pipe code on Drawing H-2-31750 Sheet 31 is the DST standard for stainless steel sample tubes and fittings.

19. Justification of the Change (Use ECN Continuation pages as needed)

Engineering Rework ☐ Yes ☒ No
Training Impact ☐ Yes ☒ No

This ECN specifies the allowed metal fittings and tube sections for connecting plastic sample tubes permanently to the sample ports on the MITs and vapor sample probes. The plastic sample tubes are left in place for long enough time periods to require a permanent ECN. The vapor probes and MITs are stainless steel. The M-31 pipe code on Drawing H-2-31750 Sheet 31 is the DST standard for stainless steel sample tubes and fittings.

20. ECN Category

☐ Direct Revision
☒ Supplemental
☐ Void/Cancel

ECN Type

☐ Supersedure
☐ Revision

21. Distribution

Name	MSIN	Name	MSIN
Brooks RL	S5-03		
Dunn RB	S5-07		

Release Stamp

JUN 15 2009
DATE:
STA: 4
HANFORD RELEASE
ID: 18

22. Revisions Planned (Include a brief description of the contents of each revision)

None

Note: All revisions shall have the approvals of the affected organizations as identified in block 12 "Approval Designator," on page 1 of this ECN.

23. Commercial Grade Item Dedication Numbers (associated with this design change)

N/A

24. Engineering Data Transmittal Numbers (associated with this design change, e.g., new drawings, new documents)

N/A

25. Other Non Engineering (not in HDCS) documents that need to be modified due to this change

Type of Document	Document Number	Update Completed On	Responsible Engineer (print/sign and date)
Alarm Response Procedure	N/A	N/A	N/A
Operations Procedure	N/A	N/A	N/A
Maintenance Procedure	N/A	N/A	N/A
None			

26. Field Change Notice(s) Used?

☐ **Yes** ☒ **No**

If Yes, Record Information on the ECN-2 Form, attach form(s), include a description of the interim resolution on ECN Page 1, block 18, and identify permanent changes.

NOTE: ECNs are required to record and approve all FCNs issued. If the FCNs have not changed the original design media then they are just incorporated into the design media via an ECN. If the FCN did change the original design media then the ECN will include the necessary engineering changes to the original design media.

27. Design Verification Required?

☐ **Yes** ☒ **No**

If Yes, as a minimum attach the one page checklist from TFC-ENG-DESIGN-P-17.

28. Approvals

Facility/Project Signatures		Date	A/E Signatures		Date
Resp. Engineer	RS Nicholson	6/10/09	Originator/Design Agent		
Resp. Manager	WM Harty	6/10/09	Professional Engineer		
Quality Assurance			Project Engineer		
IS&H Engineer	~~KA Roueche~~ WL Adams	6/11/09	Quality Assurance		
NS&L Engineer			Safety		
Environ. Engineer			Designer		
Engineering Checker	DA Bragg	6/10/09	Environ. Engineer		
Other			Other		
Other			Other		
Other			DEPARTMENT OF ENERGY / OFFICE OF RIVER PROTECTION		
Other			Signature or a Control Number that tracks the Approval Signature		
Other					
Other			ADDITIONAL SIGNATURES		
Other					
Other					

ADD THE FOLLOWING GENERAL NOTE:
(ASSIGN NEXT AVAILABLE NOTE NUMBER)

METAL FITTINGS AND TUBE SECTIONS FOR CONNECTING PERMANENT PLASTIC SAMPLE TUBING TO THE GAS SAMPLE PORTS SHALL BE PER THE M-31 PIPE CODE (H-2-31750 SHEET 31).

ADD THE FOLLOWING GENERAL NOTE:
(ASSIGN NEXT AVAILABLE NOTE NUMBER)

METAL FITTINGS AND TUBE SECTIONS FOR CONNECTING PERMANENT PLASTIC SAMPLE TUBING SHALL BE PER THE M-31 PIPE CODE (H-2-31750 SHEET 31.

S ENGINEERING CHANGE NOTICE Page 1 of 9 ☐ DM ☒ FM ☐ TM	1a. ECN 726359 R 0 1b. Proj. ECN - - R

2. Simple Modification ☒ Yes ☐ No	3. Design Inputs – For full ECNs, record information on the ECN-1 Form (not required for Simple Modifications)		4. Date 5/5/09
5. Originator's Name, Organization, MSIN, & Phone No. Robert S. Nicholson, BOSE, S5-25, 373-2986	6. PrHA Number No. 00795 R - 0 ☐ N/A	7. USQ Number No. TF - 09 - 0751 - D R - 0 ☐ N/A	8. Related ECNs ECN-726356-R0
9. Title SY FARM PRIMARY TANK SAMPLE PORTS	10. Bldg. / Facility No. 241-SY	11. Equipment / Component ID VAPOR PROBES, MITS	12. Approval Designator S
13. Engineering Documents/Drawings to be Changed (Incl. Sheet & Rev. Nos.) See Block 18.		14. Safety Designation ☐ SC ☐ SS ☒ GS ☐ N/A	15. Expedited/Off-Shift ECN? ☐ Yes ☒ No
16a. Work Package Number	16b. Modification Work Completed Responsible Engineer / Date	16c. Restored to Original Status (TM) N/A Responsible Engineer / Date	17. Fabrication Support ECN? ☐ Yes ☒ No

18. Description of the Change (Use ECN Continuation pages as needed)

Connect plastic sample tubes to the 101-SY MIT lower gas sample port and to the 1/4 inch sample tube on the 102-SY vapor probe.

This ECN changes the following drawings:

H-14-020631 Sheet 1 Rev 5
H-14-020631 Sheet 2 Rev 5
H-14-020631 Sheet 3 Rev 2

19. Justification of the Change (Use ECN Continuation pages as needed)

Engineering Rework ☐ Yes ☒ No
Training Impact ☐ Yes ☒ No

This ECN corrects the five problems that are identified on Page 3.

20. ECN Category

☐ Direct Revision
☒ Supplemental
☐ Void/Cancel

ECN Type

☐ Supersedure
☐ Revision

21. Distribution

Name	MSIN	Name	MSIN
Brooks RL	S5-03		
Dunn RB	S5-07		

Release Stamp

DATE: JUN 15 2009
STA: 4
HANFORD RELEASE
ID: 18

22. **Revisions Planned** (Include a brief description of the contents of each revision)

None

Note: All revisions shall have the approvals of the affected organizations as identified in block 12 "Approval Designator," on page 1 of this ECN.

23. **Commercial Grade Item Dedication Numbers** (associated with this design change)

N/A

24. **Engineering Data Transmittal Numbers** (associated with this design change, e.g., new drawings, new documents)

N/A

25. **Other Non Engineering (not in HDCS) documents that need to be modified due to this change**

Type of Document	Document Number	Update Completed On	Responsible Engineer (print/sign and date)
Alarm Response Procedure	N/A	N/A	N/A
Operations Procedure	TF-OPS-IHT-001		
Maintenance Procedure	N/A	N/A	N/A
None			

26. **Field Change Notice(s) Used?**

☐ **Yes** ☒ **No**

If Yes, Record Information on the ECN-2 Form, attach form(s), include a description of the interim resolution on ECN Page 1, block 18, and identify permanent changes.

NOTE: ECNs are required to record and approve all FCNs issued. If the FCNs have not changed the original design media then they are just incorporated into the design media via an ECN. If the FCN did change the original design media then the ECN will include the necessary engineering changes to the original design media.

27. **Design Verification Required?**

☐ **Yes** ☒ **No**

If Yes, as a minimum attach the one page checklist from TFC-ENG-DESIGN-P-17.

28. **Approvals**

Facility/Project Signatures		Date	A/E Signatures	Date
Resp. Engineer	RS Nicholson	6/10/09	Originator/Design Agent	
Resp. Manager	WM Harty	6/10/09	Professional Engineer	
Quality Assurance			Project Engineer	
IS&H Engineer	WK Adams ~~KA Roueche~~	6/11/09	Quality Assurance	
NS&L Engineer			Safety	
Environ. Engineer			Designer	
Engineering Checker	GR Tardiff	6/10/07	Environ. Engineer	
Other			Other	
Other			Other	
Other			DEPARTMENT OF ENERGY / OFFICE OF RIVER PROTECTION	
Other			Signature or a Control Number that tracks the Approval Signature	
Other				
Other			ADDITIONAL SIGNATURES	
Other				
Other				

Document/Drawing No. Sheet Revision

Background:

SY Farm dome space gas monitoring is currently performed using the samples tubes in the table below.

Tank	Current sample tube
101-SY	MIT-102 middle gas sample port
102-SY	½ inch heated sample tube on vapor probe
103-SY	MIT lower gas sample port

Problems:

The MITs at 101-SY and 103-SY each have 3 sampling ports, a pressure sensing port, and a water lance. Each of these 5 items has an isolation valve. Drawing H-14-020631 sheets 1 and 3 show the 5 isolation valves, but provides no indication of which valve goes to what item.

Plastic sampling tubes have been installed for several years on the vapor probe and MITs in SY Farm. Drawing H-14-020631 sheets 1 through 3 shows that all of the ports on these MITs and vapor probe are capped.

The sampling points are not standard among the DST Farms. The plastic sample tubing is connected to the MIT lower gas samples ports at tanks 103-AN, 104-AN, 105-AN, and 103-SY, and to the MIT middle gas sample ports at tanks 101-AW and 101-SY. The plastic sampling tubing is connected to the ¼ inch sample tubes on the vapor probes in AN and AP Farms, and to one of the ½ inch sample tubes on the vapor probes at most other DSTs including 102-SY.

The implementing procedure for AC 5.10 is HNF-IP-1266 section 5.10. This procedure references Procedure TFC-ESHQ-FP-STD-05 for sampling locations, which requires the sample location to be at least 3 feet below the bottom of the riser or in the exhaust ventilation duct. The current sampling point for 101-SY is closer than 3 feet to the bottom of the riser.

Sampling Procedures TF-OPS-IHT-007, TFC-OPS-IHT-004, and TFC-OPS-IHT-003 specify a travel time in the sample tube of 2 sec/ft and a sample rate of 0.5 Lpm. The ½ inch sample tubes on the vapor probes have a 0.035 inch wall thickness, and have a minimum travel time of 3.43 sec/ft at 0.5 Lpm. The 2 sec/ft at 0.5 Lpm travel time is bounding for the sample tubes on the MITs and the ¼ inch sample tubes on the vapor probes.

Solution:

Change drawing H-14-020631 sheets 1 and 3 to identify the 5 items on the MITs that are connected to the 5 isolation valves.

Change the 101-SY gas sampling point from the MIT middle gas sample port to the MIT lower gas sample port.

Change the gas sampling point on the 102-SY vapor probe from the ½ inch heated sample tube with valve SV-029 to the ¼ inch tube with SV-028.

Note: An AutoCAD page may be used in place of this form (the header section items must be included on the AutoCAD page).

Document/Drawing No. Sheet Revision

Analysis:

The Champs equipment data base identifies the items on the SY Farm MITs that are connected to each of the isolation valves.

101-SY MIT-101	ISOLATION VALVE
LOWER GAS SAMPLE PORT	SV-101
UPPER GAS SAMPLE PORT	SV-102
MIDDLE GAS SAMPLE PORT	SV-103
PRESSURE PORT	SV-104
WATER LANCE	V-103

101-SY MIT-102	ISOLATION VALVE
LOWER GAS SAMPLE PORT	SV-105
UPPER GAS SAMPLE PORT	SV-106
MIDDLE GAS SAMPLE PORT	SV-107
PRESSURE PORT	SV-108
WATER LANCE	V-104

103-SY MIT	ISOLATION VALVE
LOWER GAS SAMPLE PORT	SV-101
UPPER GAS SAMPLE PORT	SV-102
MIDDLE GAS SAMPLE PORT	SV-103
PRESSURE PORT	SV-104
WATER LANCE	V-104

Changing the 101-SY sample point from the middle gas sample port to the lower gas sample port will make it consistent with 103-AN, 104-AN, 105-AN, and 103-SY. The 101-AW MIT sample point will be changed by another ECN from the middle gas sample port to the lower gas sample port. Then the lower gas sample port will be the standard sampling point for all DSTs with vapor probes.

Changing the sample port on the 102-SY vapor probe from the ½ inch heated sample tube with valve SV-029 to the ¼ inch tube with valve SV-028 will make it consistent with all of the tanks in AN and AP Farms that have vapor probes. Other ECNs will make the same change, where necessary, at DSTs in other farms that have vapor probes. Then the ¼ inch tube will be the standard sampling point for all DSTs with vapor probes.

Note: An AutoCAD page may be used in place of this form (the header section items must be included on the AutoCAD page).

Document/Drawing No. Sheet Revision

The implementing procedure for AC 5.10 is HNF-IP-1266 section 5.10. This procedure references Procedure TFC-ESHQ-FP-STD-05 for sampling locations, which requires the sample location to be at least 3 feet below the bottom of the riser or in the exhaust ventilation duct. The ¼ inch sample tube and the ½ inch heated sample tube on the 102-SY vapor probe terminate at the same level. The values in the following table were calculated from dimensions and elevations on the following drawings:

- H-14-102410 sheets 1 and 2 for the sample tube lengths (17 ft 11 ½ in. for both the ¼ inch sample tubes and the ½ inch heated sample tubes).
- H-2-85122 for the MIT gas sample port elevations (Lower 653.24 ft, Middle 657.32 ft)
- H-2-37772 for the SY Farm primary tank bottom elevations (617.24 ft), height of the dome ellipse center above the primary tank bottom (31 ft 9 in.), and dome ellipse dimensions (30 ft x 80 ft)
- H-14-010531 sheets 1 through 3 for the SY Farm riser radii (28 ft) and riser elevations.

Tank	Distance from bottom of riser to sample tube inlet (ft)
101-SY MIT lower gas sample port	6.46
101-SY MIT middle gas sample port	2.38
102-SY vapor probe ¼ in. sample tube and ½ in. heated sample tube	6.18
103-SY MIT lower gas sample port	6.45

The 2 sec/ft at 0.5 Lpm travel time that is specified in sampling Procedures TF-OPS-IHT-007, TFC-OPS-IHT-004, and TFC-OPS-IHT-003 is bounding for the ¼ inch sample tubes. The values in the following table were calculated using vapor probe sample tube dimensions from H-2-102410 sheets 1 and 2.

	OD (in.)	Wall thickness (in.)	Travel time (sec/ft)
Vapor probe 1/4 inch sample tubes	1/4	0.035	0.60
Vapor probe heated 1/2 inch sample tubes	1/2	0.035	3.43
MIT gas sample tubes	0.375	0.035	1.72

Note: An AutoCAD page may be used in place of this form (the header section items must be included on the AutoCAD page).

1a. ECN-726359-R0

1b. Proj. ECN - - R

Document/Drawing No. H-14-020631 Sheet 1 Revision 5

WAS:

(ITEMS NOT CHANGED BY THIS ECN ARE NOT SHOWN FOR CLARITY.)

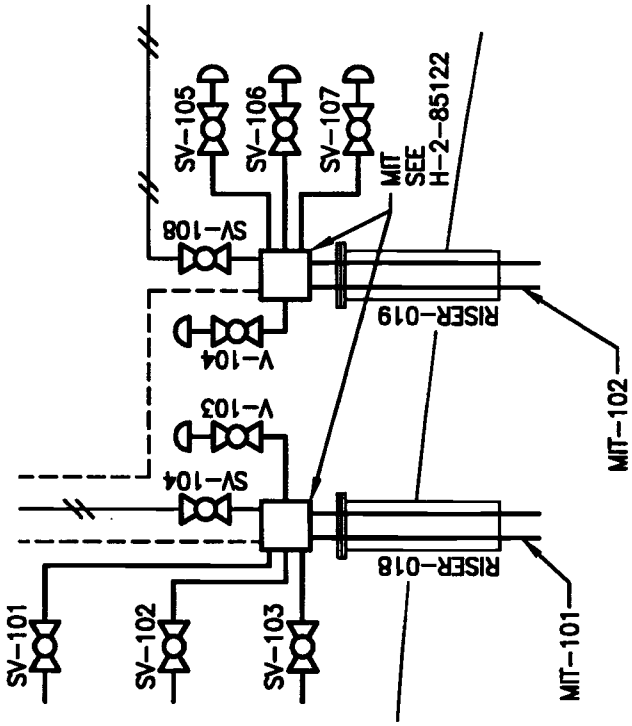

IS:

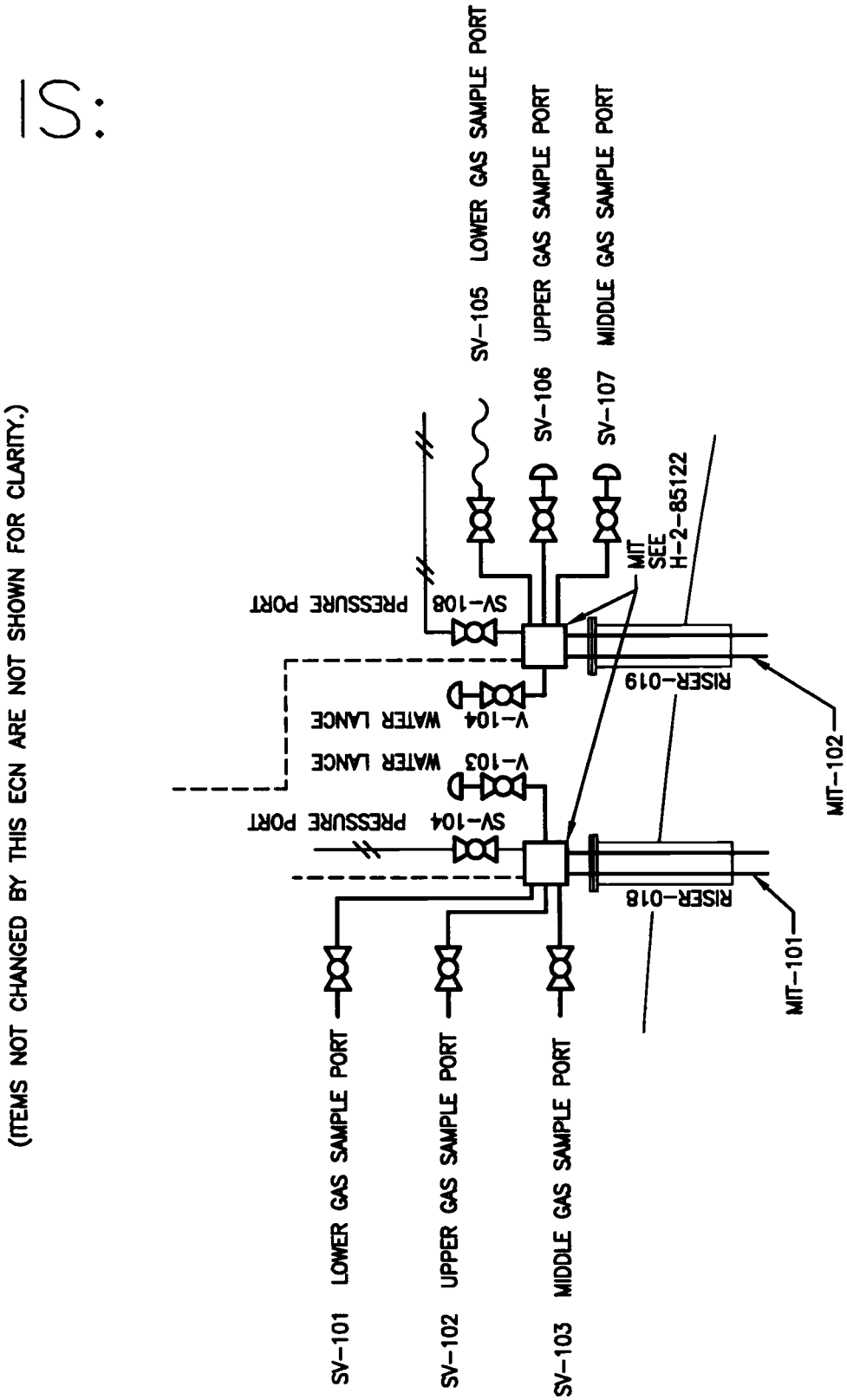
(ITEMS NOT CHANGED BY THIS ECN ARE NOT SHOWN FOR CLARITY.)
SV-101 LOWER GAS SAMPLE PORT
SV-102 UPPER GAS SAMPLE PORT
SV-103 MIDDLE GAS SAMPLE PORT
SV-104 PRESSURE PORT
V-103 WATER LANCE
V-104 WATER LANCE
SV-108 PRESSURE PORT
SV-105 LOWER GAS SAMPLE PORT
SV-106 UPPER GAS SAMPLE PORT
SV-107 MIDDLE GAS SAMPLE PORT
MIT SEE H-2-85122
RISER-018
RISER-019
MIT-101
MIT-102

Document/Drawing No. H-14-020631 Sheet 2 Revision 5

WAS:

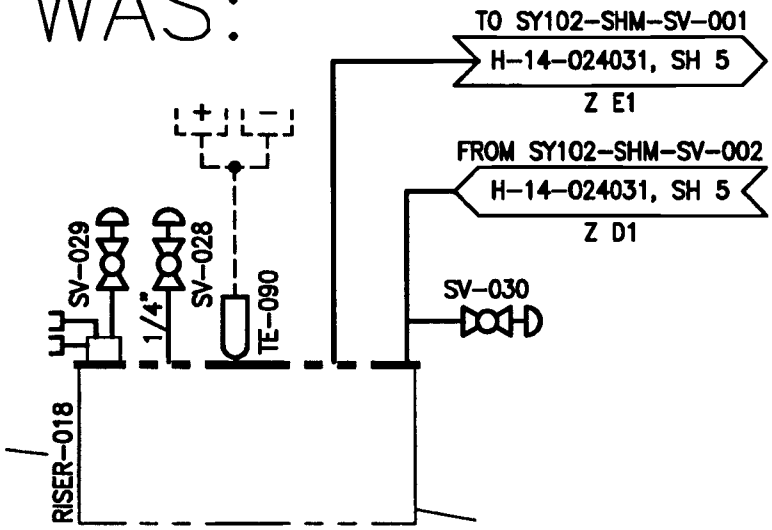

IS:

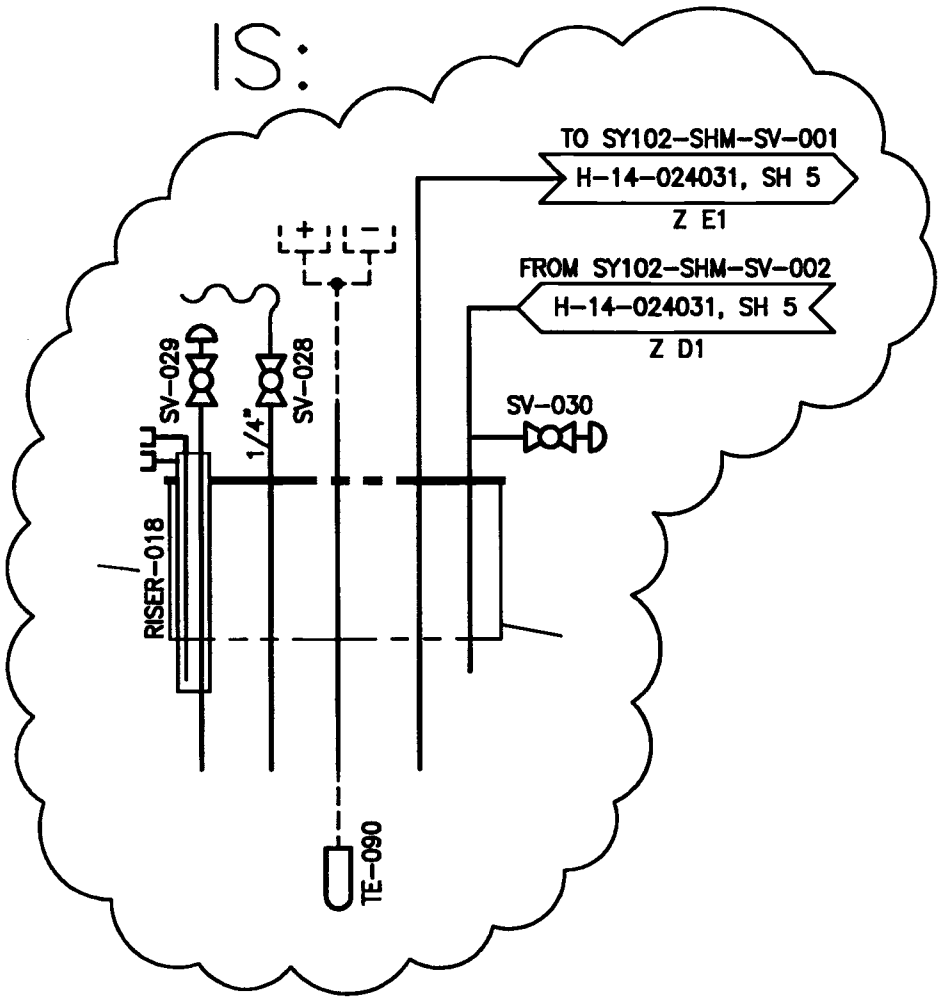

1a. ECN-726359-R0

1b. Proj. ECN - - R

Document/Drawing No. H-14-020631 Sheet 3 Revision 2

(ITEMS NOT CHANGED BY THIS ECN ARE NOT SHOWN FOR CLARITY.)

WAS:

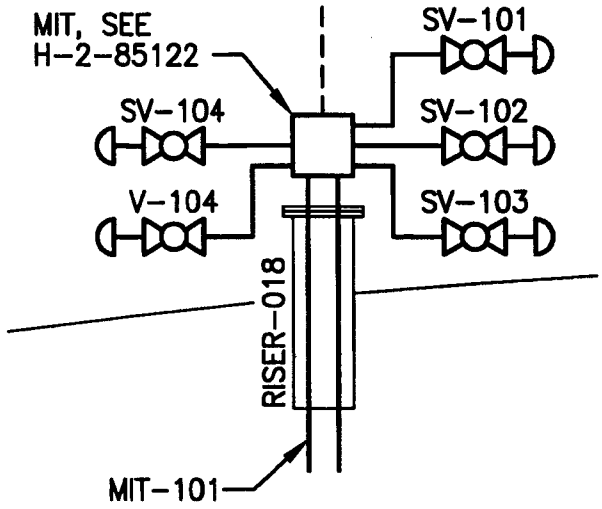

IS:

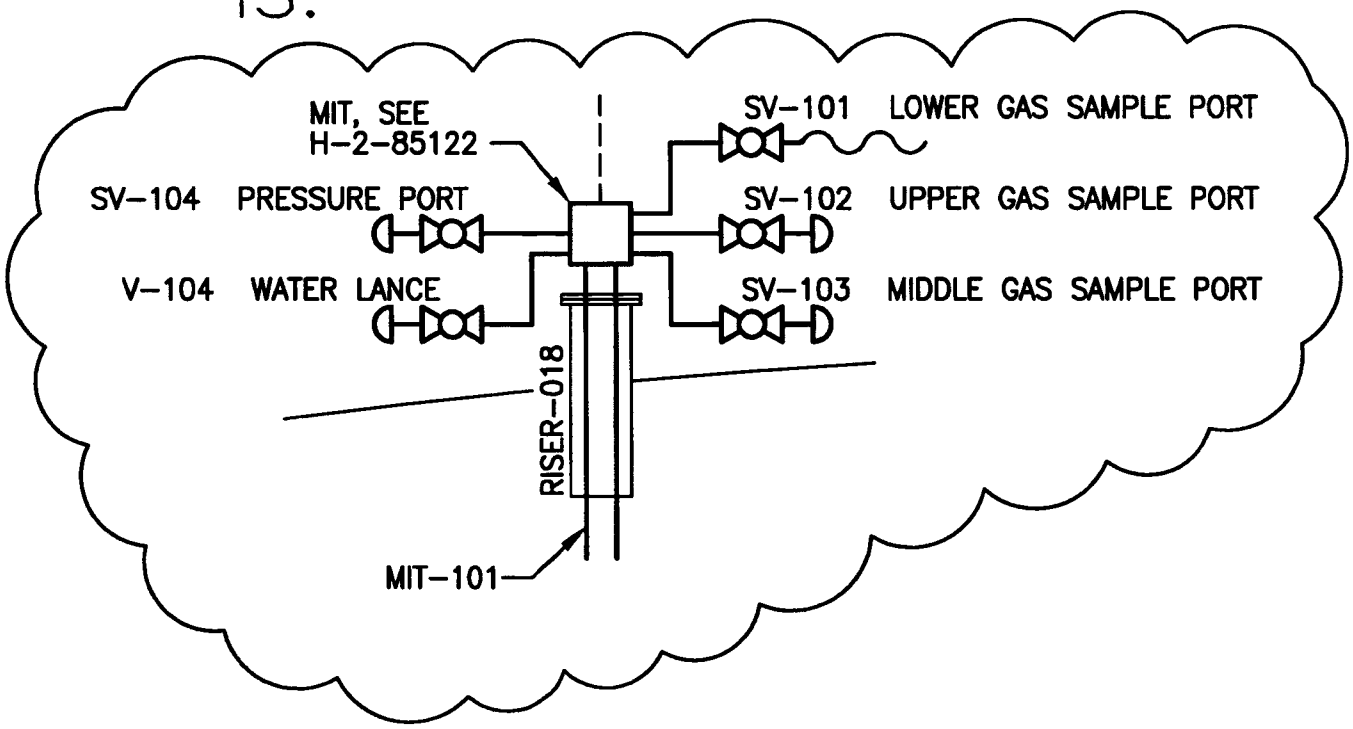

Task# WRPS-PER-2009-0150.2

E-STARS[R] Report
Task Detail Report
08/06/2009 1627

TASK INFORMATION			
Task#	WRPS-PER-2009-0150.2		
Subject	WRPS-PER-2009-0150; RES; In accordance with the ECN(s) provided in action 1 of this PER, change the currently used sample locations, where necessary,		
Parent Task#	WRPS-PER-2009-0150	**Status**	Open
Reference	WRPS-PER-2009-0150	**Due**	11/24/2009
Originator	^PER CAs	**Priority**	Medium
Originator Phone		**Category**	PER
Origination Date	05/18/2009 1504	**Generic1**	None
Remote Task#		**Generic2**	None
Deliverable	PER Review	**Generic3**	None
Class	None	**View Permissions**	Global
Instructions	*No Instructions*		

ROUTING LISTS

1	Corrective Action	Active
	In accordance with the ECN(s) provided in action 1 of this PER, change the currently used sample locations, where necessary, so that the lower gas sample port will be the standard port at all DSTs with MITs, and the ¼ in. sample tube will be the standard port for all DSTs with vapor probes. Deliverable - Copy of completed work package. RESPONSIBLE MANAGER: When this corrective action is complete, enter a closure statement in E-STARS and close the E-STARS subtask. Refer to the Problem Evaluation Request procedure TFC-ESHQ-Q-C-C-01, Section 4.4 for closure documentation requirements	
	• Brooks, Rocky L - Assign - Awaiting Response - Due Date - 11/18/2009 0000 *Instructions:*	
	• Knight, Mark A - Review - Awaiting Response - Due Date - 11/22/2009 0000 *Instructions:*	

ATTACHMENTS

Attachments

1. e-mail that corrects PER statements.pdf
2. Link to PER
3. P1010157.JPG
4. P1260077.JPG
5. PER-2009-0150 FE - FG Sample Point TSR Violation .doc
6. RE PER-2009-0150 FE on TSR Violation for FG Samplings in AW-Farm vs. LCO 3.2.1.msg
7. Vapor probe drawing.pdf
8. WRPS-PER-2009-0150 CLOSURE TF-OPS-IHT-001_B0_IHT_Flammable_Gas_Surveillances_on_Double_Shell_Tanks.doc
9. WRPS-PER-2009-0150_CLOSURE_WHY_STAIRCASE_05-06-09.doc

COMMENTS

No Comments

TASK DUE DATE HISTORY

Modified	05/18/2009 1504 - ^PER CAs	**New Due Date**	11/24/2009 0000
Modified	05/18/2009 1504 - ^PER CAs	**New Due Date**	12/20/2009 0000

Task# WRPS-PER-2009-0150.2

SUB TASK HISTORY

No Subtasks

-- end of report --

Save

Problem Evaluation Request (PER)

WRPS-PER-2009-0151
Closed 03/27/2009 09:30

PER No	Date of Discovery	Time of Discovery (24:00)	Project
WRPS-PER-2009-0151	01/26/2009	10:00	Maintenance

Location

All Tank Farms

How Was Problem Discovered

Self Assessments

Description of Concern or Problem

Specialty Assessment FY2009-ESHQ-S-0327 on compliance with 10 CFR 835.401(b) was performed between December 17, 2008 and January 7, 2009. This report resulted in four findings and five observations.

Finding 01: TFRCM 555.5 states that ANSI N42.17B indicates air flow meters, differential pressure indicators, and other devices used to determine volumetric flow rates of air samplers and monitors should be calibrated to within ±15% of the true reading. ANSI N42.17B requires that a flow meter with an accuracy of ±2% be used to perform this calibration. Contrary to these requirements air sampling procedures in use at tank farms allow the use of flow meters with a calibration accuracy of ±5%.

Requirement Not Satisfied	Source Document Number
	Specialty Assessment FY2009-ESHQ-S-0327
Equipment Identification Number	**System Identification**

Immediate actions Taken or Planned

Communicated issue to the facility. The facility initiated changes to 6-RM-0731 to change the criteria for the M&TE associated with the calibration.

Recommended Corrective actions

Route the PER as a TUFF to Ron Tucker.

Originator Contact

Include the IA on closure of the PER.

Originators Name	Originators ID	Originators Phone	Date Initiated
Brown, Robert L	H0000967	(509) 372-2932	01/26/2009

SHIFT OPERATIONS REVIEW

Title

Air flow meters

How Discovered	Agency
self-ID prior to event	

Reportability	SSC Operability	Operability Review	Comp Measures Req
Non-Reportable	N/A	N/A	

Describe actions Taken or Recommended

No additional Base Ops Shift Office actions required at this time.

SO Reviewer Name	SO Reviewer ID	SO Reviewer Phone	SO Review Date
Johnson, Brian A	H0003531	(509) 373-2696	01/26/2009

SCREENING

PER Significance Level	
PER with Resolution	

Independent Assessment Review	Occurrence Report Number	Externally Identified	
Yes		No	
Assigned Responsible	**Facilities Rep / SSO**	**Safety Management Rep**	

Manager			
Tucker, Ron			
Program		**Safety Management Program**	
• N/A		• In-Service Surveillance & Maintenance	
PER Screening Comments			
PER w/ Res informal Apparent Cause Analysis (Nancy Brown 01/27/09).			
Causal Code			
A5B2C01	Communications LTA Written Communications Content LTA Limit inaccuracies		
MGT/Comm/Train	**Human Performance**	**GEMS**	**Equip/Eng/Other**
Failed Barrier	**ORPS Code**	**Functional Area**	**Work Process**
	Not Applicable	Maintenance	• Calibration - Rad Monitor
ISMS	**Consequence Code**		
Perform work within the controls	• Calibration Standard - Calibration standard failed, expired, or otherwise LTA • Procedure - Operational - Procedure ambiguous, in error, could not be worked, was not used		
PER Screening Chair	**PER Screening Chair ID**	**PER Screening Chair Phone**	**PER Screening Date**
Brown, Nancy L	H0088797	(509) 373-0992	01/27/2009
PAAA REVIEW			
PAAA Screening	**PAAA Codes**	**Function Codes**	
PAAA, Non-NTS Reportable	• 10 CFR 835.401 (b)(1)	• M&TE (control and calibration) • Procedure Quality • RadCon Monitoring	
NTS Report Number	**NTS Report Date**		
Repetitive / Recurrent	**Programmatic**	**Intentional Violation / Misrepresentation**	
No	No	No	
PAAA Screening Comments			
PAAA Reviewer Name	**PAAA Review Date**		
Anderson, Craig E	01/27/2009		
PAAA Approver Name	**PAAA Approve Date**		
Anderson, Craig E	01/28/2009		
SENIOR MANAGEMENT REVIEW/CONCURRENCE			
TF Operations Morning Leadership Call			
N/A			
Instructions for Responsible Manager			
Review the PER Screening Tab and Senior Manager Review for requested data. Complete the task in E-STARS in accordance with TFC-ESHQ-Q_C-C-01, and TFC-ESHQ-Q_ADM-C-12 Apparent Cause Analysis & Corrective Action Planning.			
Senior Management	**Sr Mgmt ID**	**Sr Mgmt Phone**	**Sr Mgmt Review Date**
Brown, Nancy L	H0088797	(509) 373-0992	01/28/2009
CAUSE ANALYSIS			
Description of Occurrence			

Air sampling procedures in use at tank farms allow the use of flow meters with a calibration accuracy of ±5%, contrary to the ANSI N42.17B requirement that a flow meter with an accuracy of ±2% be used to perform this calibration.

Extent of Condition

Error also affects procedure 6-RM-719.

Safety Significance

Using less-than-adequate calibration acceptance standards could result in erroneous data collection.

Generic Implications

Remedial Corrective Action

Assessor discussed concern with maintenance management; one procedure has been revised, with the second in-progress.

Causal Analysis, Apparent Cause and/or Root Cause Analysis

The cause of this anomaly is attributed to the wrong calibration tolerance being referenced in the maintenance procedure. Causal analysis identified that 6-RM-719 also is in error; this procedure has been revised to reflect an acceptable calibration accuracy tolerance (page 4 attached). Procedure 6-RM-731 cited in the PER still needs to be revised accordingly.

CORRECTIVE ACTIONS

Actionee	Action Due Date	E-STARS Number
Tucker, Ron	04/17/2009	WRPS-PER-2009-0151.1

Action

Revise calibration accuracy tolerance in procedure 6-RM-327.

Corrective Action Attachments

- Link to PER
- Instrument Triennial Assessment Report Issued.doc
- WRPS-PER-2009-0151 Page 4 6-RM-719.pdf
- WRPS-PER-2009-0151.1 pg 4 6RM731.pdf

ATTACHMENTS

Link to PER

Instrument Triennial Assessment Report Issued.doc

WRPS-PER-2009-0151 Page 4 6-RM-719.pdf

AUDIT HISTORY

Change Date	Auditor	Comments
01/27/2009 06:54	Anderson, Craig E	PAAA Function Codes Changed
01/27/2009 06:56	Anderson, Craig E	PAAA Function Codes Changed
01/28/2009 08:39	Brown, Nancy L	Responsible Manager Task Launched by Brown, Nancy L
03/19/2009 15:14	Glaman, Linda R	Corrective actions Launched by Glaman, Linda R

-- End of Report --
03/27/2009 09:45 AM

Task# WRPS-PER-2009-0151			
E-STARS[R] Report Task Detail Report 03/27/2009 0945			
TASK INFORMATION			
Task#	WRPS-PER-2009-0151		
Subject	RES; Air flow meters		
Parent Task#		Status	CLOSED 03/27/2009
Reference		Due	04/28/2009
Originator	^PER Coordinator	Priority	Medium
Originator Phone		Category	PER
Origination Date	01/26/2009 0957	Generic1	None
Remote Task#		Generic2	None
Deliverable	PER Review	Generic3	None
Class	None	View Permissions	Global
Instructions	*No Instructions*		
ROUTING LISTS			
1	Corrective actions Routing Lis		Inactive
	To launch Corrective actions.		
	• ^PER CAs(Owen, Annette) - Assign - Completed - 03/27/2009 0920 *Instructions:*		
2	Responsible Manager		Inactive
	Review the PER Screening Tab and Senior Manager Review for requested data. Complete the task in E-STARS in accordance with TFC-ESHQ-Q_C-C-01, and TFC-ESHQ-Q_ADM-C-12 Apparent Cause Analysis & Corrective Action Planning.		
	• Tucker, Ron - Assign - Completed with comments - 03/12/2009 1352 *Instructions:*		
	• Tucker, Ron - Assign - Completed - 03/12/2009 1352 *Instructions:* Did you contact the originator about the PER? Document your contact in the response window.		
	• ^Independent Assessment Review(Brown, Robert L) - Review - Concur with comments - 03/12/2009 1554 *Instructions:* Independent Assessor Review		
3	Review Initial PER		Inactive
	Review New PER		

Task# WRPS-PER-2009-0151			
	• ^SO(Johnson, Brian A) - Review - Concur - 01/26/2009 1007 *Instructions:*		
	• ^PER Screening(Brown, Nancy L) - Review - Concur - 01/27/2009 1436 *Instructions:*		
	• ^Mgr Review - Review - Cancelled - 01/28/2009 0839 *Instructions:*		
ATTACHMENTS			
Attachments	1. Link to PER 2. Instrument Triennial Assessment Report Issued.doc 3. WRPS-PER-2009-0151 Page 4 6-RM-719.pdf		
COMMENTS			
Poster	Tucker, Ron (Ficklin, Jim) - 03/12/2009 0103		
	Completed		
	Causal analysis complete; see updated PER. One new task to be launched.		
Poster	^Independent Assessment Review (Brown, Robert L) - 03/12/2009 0303		
	Concur		
	Concur Bob Brown		
Poster	^PER Coordinator (Owen, Annette) - 03/27/2009 0903		
	CLOSED		
	All Corrective Actions closed.		
TASK DUE DATE HISTORY			
Modified	03/19/2009 1514 - ^PER Coordinator	New Due Date	04/28/2009 0000
Modified	01/28/2009 0839 - ^PER Coordinator	New Due Date	03/16/2009 1630
Modified	01/28/2009 0839 - ^PER Coordinator	New Due Date	03/12/2009 1630
Modified	01/26/2009 0957 - ^PER Coordinator	New Due Date	01/28/2009 1630
SUB TASK HISTORY			
Subtask#	WRPS-PER-2009-0151.1		
Subject	WRPS-PER-2009-0151; RES; Revise calibration accuracy tolerance in procedure 6-RM-327.		
Originator	^PER CAs		
	Routing List	*No Active Routing List*	
-- end of report --			

Task# WRPS-PER-2009-0151.1			
E-STARS[R] Report Task Detail Report 03/27/2009 0945			
TASK INFORMATION			
Task#	WRPS-PER-2009-0151.1		
Subject	WRPS-PER-2009-0151; RES; Revise calibration accuracy tolerance in procedure 6-RM-327.		
Parent Task#	WRPS-PER-2009-0151	Status	CLOSED 03/27/2009
Reference	WRPS-PER-2009-0151	Due	04/24/2009
Originator	^PER CAs	Priority	Medium
Originator Phone		Category	PER
Origination Date	03/19/2009 1514	Generic1	None
Remote Task#		Generic2	None
Deliverable	PER Review	Generic3	None
Class	None	View Permissions	Global
Instructions	*No Instructions*		
ROUTING LISTS			
1	Corrective Action		Inactive
	Revise calibration accuracy tolerance in procedure 6-RM-327. RESPONSIBLE MANAGER: When this corrective action is complete, enter a closure statement in E-STARS and close the E-STARS subtask. Refer to the Problem Evaluation Request procedure TFC-ESHQ-Q-C-C-01, Section 4.4 for closure documentation requirements QUALITY ASSURANCE: Review for adequate completion.		
	• Tucker, Ron - Assign - Completed with comments - 03/26/2009 1027 *Instructions:*		
	• ^Independent Assessment Review(Brown, Robert L) - Review - Concur with comments - 03/26/2009 1802 *Instructions:* Independent Assessor Review		
ATTACHMENTS			
Attachments	1. Link to PER 2. Instrument Triennial Assessment Report Issued.doc 3. WRPS-PER-2009-0151 Page 4 6-RM-719.pdf 4. WRPS-PER-2009-0151.1 pg 4 6RM731.pdf		
COMMENTS			
Poster	Tucker, Ron (Ficklin, Jim) - 03/26/2009 1003		

Task# WRPS-PER-2009-0151.1			
	Completed		
	Corrective action complete. Note: 6-RM-327 as listed in the corrective action is a typo; there is no such procedure. As described in the Causal Analysis block, the procedure that needed to be revised is 6-RM-731. The 3rd bullet of 6-RM-731 Section 4.1, page 4 (attached to the TDR) documents the change (3/19/09 revision date). A mass flowmeter will be used, which is characterized by much tighter accuracy tolerances than that of a rotometer. This change was discussed with the PER originator, who concurred with the change.		
Poster	^Independent Assessment Review (Brown, Robert L) - 03/26/2009 0603		
	Concur		
	Concurr		
Poster	^PER CAs (Owen, Annette) - 03/27/2009 0803		
	CLOSED		
	Closure statement and attached documentation are adequate to close this action.		
TASK DUE DATE HISTORY			
Modified	03/19/2009 1514 - ^PER CAs	New Due Date	04/24/2009 0000
Modified	03/19/2009 1514 - ^PER CAs	New Due Date	04/28/2009 0000
SUB TASK HISTORY			
No Subtasks			
-- end of report --			

Specialty Assessment FY2009-ESHQ-S-0327,
Triennial Assessment Program,
10 CFR 835.401(b)
Radiological Instrumentation

A specialty assessment on compliance with 10 CFR 835.401(b) was performed between December 17, 2008 and January 7, 2009. This report discusses the purpose, scope and results of the assessment.

1.0 EXECUTIVE SUMMARY

The assessment determined that the company's program and procedure implementation are sufficient to demonstrate compliance with 10 CFR 835.401(b) but based on the findings and observations noted, the program can be improved.

The assessment evaluated compliance to the requirements of HNF-MP-5184, *CH2M HILL Hanford Group, Inc. Radiation Protection Program* (RPP) relating to referenced portions of 10 CFR 835 as implemented by company program and procedures.

The assessment is performed at greater than three years from the previous instrumentation assessment, but within the 30 days provided by 10 CFR 835.3(e):

> *For those activities that are required by -835.102, 835.901(e), 835.1202(a), and 835.1202(b), the time interval to conduct these activities may be extended by a period not to exceed 30 days to accommodate scheduling needs.*

The assessment resulted in ~~five~~ four Findings and five Observations as discussed in section 5.0, Assessment Results.

Noted weaknesses in include:

- Ineffective corrective actions
- Craft training and training records
- Program ownership and defined responsibilities
- Technical content at the programmatic level
- Subcontractor oversight

No issues were noted in the day to day operation of instruments by health physics technicians, instrument selection, or knowledge level of persons performing calibrations. Where provided, training is effectively implemented in the field.

Project staff aggressively addressed any significant issues noted and, as discussed in the report, corrected several issues immediately.

2.0 PURPOSE

The assessment evaluated compliance to the requirements of HNF-MP-5184, *CH2M HILL Hanford Group, Inc. Radiation Protection Program* (RPP) relating to referenced portions of 10 CFR 835 as implemented by company program and procedures. This assessment also was used to determine the extent of calibration issues associated with **CH2M-PER-2008-1529.**

3.0 SCOPE

This assessment will include evaluations at Base Operations, Retrieval & Closure Operation, and program functions.

Pacific Northwest National Lab support functions done in accordance with contract and release number 36437-18, *Instrumentation and Radioactive Source Calibration Services*, are included in the assessment.

The Integrated Management Safety System (ISMS) levels for this assessment include both company and facility levels.

4.0 ASSESSMENT APPROACH AND METHODOLOGY

The assessment relied on:

- Objective evidence of the implementation of the program through the review of documentation.
- Limited Field Observations.
- Interviews/surveys of managers and employees with defined responsibilities for performing work associated with radiological instrumentation.

5.0 ASSESSMENT RESULTS

The assessment determined that the company's program and procedure implementation are sufficient to demonstrate compliance with 10 CFR 835.401(b) but based on the findings and observations noted, the program can be improved.

5.1 Findings

Finding 01: TFRCM 555.5 states that ANSI N42.17B indicates air flow meters, differential pressure indicators, and other devices used to determine volumetric flow rates of air samplers and monitors should be calibrated to within ±15% of the true reading. ANSI N42.17B requires that a flow meter with an accuracy of ±2% be used to perform this calibration. Contrary to these requirements air sampling procedures in use at tank farms allow the use of flow meters with a calibration accuracy of ±5%. - (WRPS-PER-2009-0151) ~~(NOTE: Procedure changes have been initiated. If approved this finding goes to a noted, but corrected issue)~~

Finding 02: TFRCM 555.5 states: Calibrations should be performed annually at the atmospheric pressure and temperature conditions that are expected during sampling conditions, **or the appropriate correction factor should be applied during the calculation of the flow rate** (bold added for emphasis). ~~NuReg 1400~~NUREG 1400, section 5.5, Pressure and Temperature, states that if the temperature varies by enough to cause the measured volume to vary by more than 5% then the temperature should be corrected for. Additionally, TFRCM Article 562 states: The effects of environmental conditions, including interfering radiation, on an instrument shall [835.401(b)(3)] be known prior to use. Contrary to these requirements, the effect of temperature on the sampled volume for air samplers is not addressed in training, technical basis documents, or procedures for work place air sampling. (WRPS-PER-2009-0152)

~~Finding 03: TFC ESHQ S_SAF C 07, *Subcontractor Oversight*, requires that contracts be screened to determine the need for subcontractor oversight plans. Contrary to this requirement, no screening was performed for contract and release number 36437-18, *Instrumentation and Radioactive Source Calibration Services*.~~

Finding 0~~3~~4: DOE Order 5480.20A, *Personnel Selection, Qualification, and Training Requirements for DOE Nuclear Facilities,* requires a training program be based on a systematic analysis of the job to be performed. Contrary to this requirement, no job task analysis has been performed to determine the training needs for personnel performing calibration of radiological instrumentation and equipment at Tank Farms. ~~WRPS-PER-2008-0201 was written independently on this subject on January 10, 2009.~~ (WRPS-PER-2009-0153)

Finding 0~~4~~5: TFRCM 761.1 requires results of calibrations performed on instruments and equipment used for monitoring individuals, materials, and areas as required by this Manual shall [835.703(d)] be documented and maintained and shall include frequencies, method, dates, personnel, training and traceability of calibration sources to National Institute of Science and Technology or other acceptable standards [HSD J.6]. Contrary to this requirement, training records for persons responsible for calibrating PCM-2 instruments at the 222-S laboratory were not maintained as required. (WRPS-PER-2009-0154) ~~(Note, Efforts are underway to recover records of training, if successful this becomes a note in the report)~~

5.2 Observations

Observation 01: Data sheets for the calibration of the 2704 HV count room equipment do not include complete identification of M&TE or appropriate tolerances for all data. (WRPS-PER-2009-0155)

Observation 02: The roles and responsibilities for the calibration of radiological control instrumentation in terms of procedure technical content ownership have not been established within the TOC. (WRPS-PER-2009-0156)

Observation 03: The flow down of requirements is not complete to ensure the Radiological Control Organization is notified when out of tolerance values are identified during calibrations. ~~222-S Laboratory procedures 2S18062 and 2S18065 do not contain the criteria to notify the Radiological Control Organization when equipment is found out of tolerance.~~(WRPS-PER-2009-0157)

Observation 04- Records Schedules - Radiation detection instrument calibration records retention codes and retention periods are inconsistently listed in IDMS and RIDS. (WRPS-PER-2009-0144)

Formatted: Font: 12 pt

Formatted: Font: 12 pt

Observation 05- Weaknesses in the implementation of the statement of work for instrumentation services by the calibration services provider (PNNL) were observed in that required actions were not taken and corrective actions to address identified deficiencies were not taken in a timely manner. (WRPS-PER-2009-0158)

5.3 Effectiveness of Previous Corrective Actions

PERs and the associated corrective actions were reviewed to verify that radiological instrumentation issues are being identified and corrected.

Numerous PERs have been written in the past three years dealing with radiological instrumentation. The volume and more specifically the content, especially over the past year, provide ample evidence that personnel are aggressively evaluating the radiological control instrumentation program within Tank Farms.

Improvements in the program were noted, for example an out of tolerance condition found on a radiological instrument by any calibration service provider is, in most cases, reported to the effected Radiological Control Organization and is generally addressed through the PER system. This allowed better tracking of issues relative to air sampler calibration and resulted in significant program improvements.

The number of PERs generated is not in itself a measure of effective program evaluation; the effective resolution of the identified issues is of primary importance.

As discussed in ~~this report specific sections~~this report, -the effectiveness of corrective actions is less than adequate. However as the PER process is currently

undergoing significant revision, issues associated with effectiveness of corrective actions are included in specific sections as independent issues.

5.4 Documentation

A review of HPT records associated with daily source checks of instrumentation found records were of good quality with few instances of write-overs. Those noted were not of sufficient magnitude to require corrective actions. The records reviewed included Base Operations East and Base Operations West.

Data sheets for calibration of equipment were reviewed for count room equipment in the 2704 HV count room, PCM-1Bs, and portable air samplers.

Opportunities for improvement were noted. Examples include:

- Lack of complete identification of maintenance and test equipment (M&TE) on count room data sheets.
- Insufficient space on data sheets (specifically STAPLEX air samplers) for all of the M&TE required to be recorded.
- Lack of identified tolerances on calibration parameters (generally limited to count room equipment).

These issues do not represent a non compliance with requirements but fall more into the human factors category. For example on the STAPLEX air sampler data sheet, the M&TE is often recorded in the comments section because four pieces of M&TE are required, but only two blanks for M&TE are included on the form. If documentation is expected, the means for documenting the data should match the data being recorded. Maintenance management was presented with this issue and indicated the identified issue was being corrected.

In the 2704 HV count room the data sheets are relatively new and as such, have not had the improvements that inevitably come with use. However the lack of tolerances for calibration outcomes leaves no method for the person performing or reviewing the recorded values to determine if the values are appropriate. In other cases the range is included in the procedure but not on the data sheet. M&TE is only identified by asset number on the data sheets.

Observation 01: Data sheets for the calibration of the 2704 HV count room equipment do not include complete identification of M&TE or appropriate tolerances for all data.

5.5 Program Ownership

Interviews with management and staff at the program and project level in engineering, radiological controls, and maintenance consistently identified the

lack of clearly defined technical responsibilities as a barrier to the efficient management of instrument programs and resolution of issues.

Within tank farms the radiological instrumentation subject matter expert resides in the Radiological Control Organization and is qualified as a Tank Farms Company/Facility Technical Authority for Fixed/Portable Instrumentation, course number 356405.

The tank farms system for maintenance does not specifically address the role of the radiological technical expert or the role of tank farms as a calibration services provider for radiological instrumentation. The current process drives the decision making process for calibration and associated data sheets to the Engineering Organization via TFC-ENG-FACSUP-C-23, Equipment Identification and Data Management, which states:

> *The responsible engineer provides technical support for preparation approval and changes to maintenance procedures, PM Ids, and calibration work instructions and ensures accuracy of technical aspects associated with PM Ids.*

Radiological instrumentation is a critical element of the Radiological Control Safety Management program credited in the Documented Safety Analysis and described in section 7.8, and as such should have a defined structure where the control and use of radiological instrumentation intersects with the role of the TOC as a calibration services provider for that instrumentation.

TFC –PLN-29, *Maintenance Implementation Plan*, does not address this issue relative to -radiological instrumentation.

These issues have manifested themselves in the day to day operations:

- Unclear approval authorities for maintenance procedures and data sheets.
- Impaired resolution of calibration issues.
- Project initiated modification of area radiation monitors made without radiological control program approval requiring rework by PNNL. The modifications jeopardized the environmental conditions approval for the use of the instrument.
- Lack of technical guidance on volume measurement of air samplers used in temperature extremes field.

This lack of clearly defined roles and responsibilities has been identified using the PER system (CH2M-PER-2008-0380) but has gone unresolved.

As no clearly defined regulatory requirements exist to have a cohesive program ownership, therefore this issue is not a requirements based issue but rather a business management issue and is represented in the Observation 02: The roles and responsibilities for radiological control instrumentation in terms of the TOC

role as calibration services provider for instrumentation used to fulfill the program requirements of a Safety Management Program should be evaluated and defined.

5.6 Verification of the Effectiveness of Training

The *Tank Farms Radiological Control Manual* (TFRCM), HNF 5183, requires in 613.7, a verification of the effectiveness of training. This feature is included in the Triennial Assessment process. During the assessment four HPTs were observed performing work covered under course number 022522, *Operate the Portable Alpha Meter (PAM)*, and 022521, *Operate the Eberline E-140 (GM)*.

No exceptions to training were noted in the performance of the tasks. The specific tasks observed were for the following skill objectives:

- P 022522.S.03 Given a PAM, perform a daily source check in accordance with procedures.
- 022522.S.04 Document removing a PAM from service.
- P 022521.S.03 Given an E-140, perform a daily source check in accordance with procedures.

No performance deficiencies by HPTs were noted during the assessment. The HPTs observed were from Base Operations and Retrieval and Closure Operations.

5.7 Extent of Condition for CH2M-PER-2008-1529

This assessment was used to document the extent of calibration issues associated with **CH2M-PER-2008-1529.**

Critical elements in this PER were:

- M&TE Equipment
- Record Quality
- Consistency of Calibration Frequency
- Lack of a Calibration "Program" as recommended in DOE G 441.1-1C and NCSL RP-1, Establishment and Adjustment of Calibration Intervals.

5.7.1 M&TE Equipment

Energy Northwest Standards Laboratory reports for five pieces of M&TE were reviewed, of the five only one issue was noted. The RadeCo Flow meter, asset Number 817-28-03-019 was calibrated to ±5%. The flow meter is used to calibrate RadeCo flow meters to ±15%. This accuracy is not sufficient to achieve a ±15% during calibration. The maintenance organization was contacted and noted that this issue had been self identified and a different standard with a flow meter with ±1% accuracy is being used to calibrate RadeCo air samplers. A

review of data sheets verified that the use of the standard with the tighter accuracies on RadeCo air samplers calibrated in August of 2008.

The procedure governing calibration of the RadeCo air samplers, 6-RM-719, was reviewed and it has not been modified, but still calls out the use of the RadeCo flow meter:

> *Flow calibrator - RadeCo Model C-828 (0-8 CFM) or equivalent*

222-S procedure, 2S18065: Air Grab Samplers, was evaluated and contains similar language.

This reflects a potential noncompliance with the TFRCM Article 555.3 which states:

> ANSI N42.17B indicates that air flow meters… …and other devices used to determine volumetric flow rates of air sampler and monitors should be calibrated within ±15% of the true reading.

ANSI N42.17B clarifies these criteria in section 9.1.2, Test, by stating:

> 9. Air Circuit Criteria
>
> 9.1 Flow or Flow rate Meter Accuracy
>
> 9.1.1 Requirements
>
> Air flow rate meters shall be accurate to within ±15% of the conventionally true flow rate values.
>
> 9.1.2 Test
>
> A volumetric measuring device or flowmeter, standardized under the measuring conditions and having ~~an accuracy~~accuracy better than 2%, shall be used in this test.

The flow rate meter currently identified in tank farm procedures is the RadeCo flow meter with an accuracy of ±5%. The accuracy is listed on the Energy Northwest Standards Laboratory Calibration Report for the Model C-828 RadeCo Flow meter, asset number 817-28-03-019, as ±5%.

This results in Finding 01, TFRCM 555.5 states that ANSI N42.17B indicates air flow meters, differential pressure indicators, and other devices used to determine volumetric flow rates of air samplers and monitors should be calibrated to within ±15% of the true reading. ANSI N42.17B requires that a flow meter with an accuracy of ±2% be used to perform this calibration. Contrary to these requirements air sampling procedures in use at tank farms allow the use of flow meters with a calibration accuracy of ±5%.

The Base Operations West Maintenance Manager determined that a flow meter with better accuracy should be used and implemented the use of a different flow meter. This reflects an awareness of the criteria and actions taken to address the

issue. However, as the procedures governing the process were not changed, the finding reflects a current deficient condition.

During interviews the Base Operations West Maintenance Manager indicated he had communicated the issue to the previous Radiological Control Director who determined it was not an issue. Additionally the Company Technical Authority noted the same issue in CH2M-PER-2008-1544 but corrective actions were not effective.

5.7.2 Record Quality

Record quality issues were noted, but were relatively minor. While better attention to record quality is needed, the issues noted do not rise to the level requiring formal corrective action. This was communicated to effected management during the assessment.

Improving the match between the data sheets and the work being performed presents a better opportunity to improve the process and is discussed in Observation 01.

5.7.3 ~~Lack of a~~ Calibration Program as recommended in DOE G 441.1-1C

DOE G 441.1-1C, *Radiation Protection Programs Guide for Use with Title 10, Code of Federal Regulations, Part 835, Occupational Radiation Protection*, defines the essential elements of an acceptable portable instrument calibration program:

- A system that ensures calibration shall be performed periodically on each instrument [10 CFR 835.401(b)(1)]. ANSI N323A (4.9) recommends that calibration be performed at least annually.

  Review: This is currently met by the existing calibration program at TOC. All instruments reviewed were calibrated on at least an annual basis.

- An internal audit program shall be conducted no less frequently than every 36 months (10 CFR 835.102).

  Review: This is met by the current Triennial Assessment Program

- A records program shall be established that documents results of maintenance and calibration performed on instruments and equipment used for area monitoring and contamination control [10 CFR 835.703(d)], includes the maintenance of training records [10 CFR 835.704(a)], documents changes in equipment, techniques, and procedures used for monitoring, [10 CFR 835.704(e)], and documents the results of internal audits [10 CFR 835.704(c)].

Review: Without assessing each program element the quality of the implementation of each sub element cannot be determined, but in each sub element, the TOC has a records program in place to accomplish the defined element. Two findings in this report discuss training related issues. CH2M-PER-2008-1560 identifies training issues but corrective actions were not initiated.

Further, the following elements should be in place for those activities that perform their own instrument calibrations:

- Procedures addressing the calibration of reference sources, support instruments, and field instruments;

  Review: *Control And Calibration Of Measuring And Test Equipment,* TFC-OPS-MAINT-C-07, provides for the calibration of MT&E. Other categories of equipment such as PCM-1Bs, count room equipment, and air samplers are all covered by calibration procedures.

- A method to determine when instruments have been returned out-of-calibration and a method to notify users of out-of-calibration instruments;

  Review: Procedures were reviewed and as found readings are taken that allow determination that a piece of equipment is found out of tolerance. Procedures were reviewed for calibration of equipment. The procedures used to calibrate equipment at the 222-S labs were found to not have this specifically identified for two of the following procedures:

  2S18049: *Eberline Personnel Contamination Monitor Model PCM-2* Yes
  2S18052: *Eberline HFM-6 Hand and Foot Monitor* Yes
  2S18058: *Eberline Beta Air Monitor, Models AMS-3, AMS-3A, AMS-3A-1, and 700300* Yes
  2S18060: *Eberline Personnel Contamination Monitor, Model PCM-1B* Yes
  2S18062: *Eberline Radiation Monitor(s) Models HFM-6, PCM-1B and PCM-2 Cleaning, Inspection and Replaced Detector Efficiencies* No
  2S18065: *Air Grab Samplers* No

The issues of notifying radiological controls when an instrument fails a calibration or functional check has been previously documented on PERs CH2M-PER-2006-2015 and PER-2005-4261, but the effectiveness of corrective actions have been less than adequate. This is also an observation in the current report, Observation 03, discussed in more detail later in the report.

5.8 Training

A review of training records indicate that Health Physics personnel operating radiological monitoring equipment have well documented training, ~~however the~~however the training content for the use of portable instruments and air samplers is not comprehensive in that it does not address volume adjustments necessary for temperature extremes.

Within the HPT certification program, courses 022004 and 0220T4, learning objective 2.18.03 states: Identify the physical and operating characteristics and the limitation of high volume (>2cfm) portable air samplers. The course material is lacking the discussion of limitation which can effect the measurement of the volume in the field. For tank farms the most significant is the effects of temperature. ~~NuReg 1400~~NUREG 1400 provides guidance on temperature correction. Using the guidance contained in ~~NuReg 1400~~NUREG 1400, section 5.5, Pressure and Temperature, if the temperature varies by enough to cause the measured volume to vary by more than five % then the temperature should be corrected for. Using an example of an air sampler calibrated at 72 °F, more than a 26°F increase or decrease in temperature would require the air sample volume to be adjusted. As the temperatures are often below 46°F or above 98°F, the training of technicians is less than adequate on the subject of limitations associated with air samplers. Information of this type is provided for radiation and contamination survey instrumentation. NUREG 1400 is applicable as it is listed as a standard in TFC-0504-FCDMP-018, Workplace Air Monitoring Standards. FCDMP-018 defines the standards and methods used to manage a compliant work place air monitoring program.

This issue is included in Finding 02: TFRCM 555.5 states: Calibrations should be performed annually at the atmospheric pressure and temperature conditions that are expected during sampling conditions, **or the appropriate correction factor should be applied during the calculation of the flow rate** (bold added for emphasis). ~~NuReg 1400~~NUREG 1400, section 5.5, Pressure and Temperature, states that if the temperature varies by enough to cause the measured volume to vary by more than 5% then the temperature should be corrected for. Additionally, TFRCM Article 562 states: The effects of environmental conditions, including interfering radiation, on an instrument shall [835.401(b)(3)] be known prior to use Contrary to these requirements, the effect of temperature on the sampled volume for air samplers is not accounted for and the methods for doing so are not addressed in training, technical basis documents, or procedures for work place air sampling.

5.9 Electronic Calibration Records and Record Schedules

PER-2005-4260 from the 2005 RadCon Triennial assessment on this topic identified:

The assessment pointed out the retention period requirements for Radiological Control was 75 years and the work packages for calibrating this equipment were listed on the RIDS inventory for three years. The work packages for Radiological equipment are listed on the RIDS under an inappropriate Administrative schedule which specifies three year retention. The actual requirements (see attachment) are direct excerpts from the DOE Records Schedules that clearly show these records should be listed as 75 year retention under the appropriate schedule.

A review of this past finding identifies major improvements have been made to calibration records and all CHAMPS work order records. Currently, work orders in CHAMPS that have been closed for longer than 30 days are sent to IDMS for electronic records retention. This began in roughly September 2006. Before then, closed work orders were physically sent to Seattle for records retention.

The transition from physical records to IDMS electronic records aids in efficiency and functionality as was demonstrated when Work Control personnel were able to assist this assessment with the retrieval of electronic records (completed RadCon calibration data sheets) without the need to hunt through physical paper records or retrieve records from off-site.

Review of the IDMS information for these records identifies the code ENV 1.d.8a was selected with a 75 year retention period.

Review of the RIDs information for these records indicates a code of ADM-17.32a, with a retention period of "Retain until the item is removed from service."

Thus, the electronic records are safely stored in IDMS, however, IDMS and RIDS specify different retention codes and retention periods. The Records and Document Control Manager and Records Management Specialist are aware of this discrepancy and plan to correct the retention code and retention period during the 2009 RIDs campaign.

Observation 04, Records Schedules - Radiation detection instrument calibration records retention codes and retention periods are inconsistently listed in IDMS and RIDS.

5.10 Calibration Data Sheets

Review of calibration data sheets indicate several notes were made that RadCon engineering was notified if equipment was found "out of tolerance." In addition, there is one note in the reviewed calibration data sheets indicating that a calibration frequency was shortened due to items being found out of calibration.

Despite this positive observation, the flow down of requirements does not appear to be complete in this area.

TFRCM, Article 562, -Inspection, Calibration and Performance Tests, item 8, requires the following:

> *The Radiological Control Organization shall evaluate the potential radiological consequences and document any corrections to the original monitoring results upon determination of the use of an out-of-calibration or failed radiation measurement instrument [HSD H.4]. The Radiological Control Organization should review surveys performed with the instrument while it was out of calibration.*

TFC-ESHQ-RP_INS-P-05, *Radiation Protection Instrument Program,* states the following:

Applicable Project Instrumentation Facility Point of Contact	1.	Document and maintain evaluations of potential radiological consequences associated with the use of an out-of calibration or out-of tolerance radiation measurement instrument: (7.1.2.a) NOTE: The Project radiological control organization receives notification of as-found out of tolerance instruments from the calibration service provider.

TFC-OPS-MAINT-C-01, REV N-6, *Tank Farm Contractor Work Control* aids in accomplishing this requirement:

> 4.8.1.5.b Ensure data is within tolerances listed in the procedure or in the work instruction steps. Notify the senior shift manager if data is outside of the tolerances.

However, there is no driver for the senior shift manager to then notify the *Radiological Control Organization* so they may evaluate the situation. The flow down of the requirement appears to stop here.

The line item in the work order paperwork that asks if Radiological Engineering was notified of OOT conditions is helpful, but it's not a procedurally flowed down requirement.

This is a repeat item from the 2005 Triennial (captured in PER-2005-4261) on this topic, page 4, bullet 3 of the report which stated:

> TFC-ESHQ-RP_INS-P-05 specifies Radiological Control to be notified when out of tolerance values are identified during pre-calibration and calibration tests. There are no notification requirements to Radiological Control in TFC-OPS-MAINT-C-01. The notification is important to ensure personnel are being appropriately monitored;

Observation 03: The flow down of requirements through TFC-OPS-MAINT-C-01 is not complete to ensure Radiological Control is notified when out of tolerance values are identified during calibrations. 222-S Laboratory procedures 2S18062 and 2S18065 do not contain the criteria to notify Radiological Controls when equipment is found out of tolerance.

5.11 Subcontractor Oversight

PER-2005-4263 from the previous triennial assessment on this topic was issued as a PIE/CIM and questioned the lack of a subcontractor oversight plan. The PER states,

> *Observation RP-O-03 states, The decision to not develop a contractor QA oversight plan for Pacific Northwest National Laboratory needs to be reevaluated given the level of risk associated with provided services and the company decision to no longer participate in multi-contractor assessments.*

The PER was answered with the following:

> *The subcontractor oversight process is to be revised based on a new process approved by the ERSB. The use of oversight plans will be strengthened and under the cognizance of line management. See attached files describing the new process*

This statement that the process is to be revised did not reevaluate the need for an oversight plan. ~~Three years later, the situation is the same.~~
During the assessment the performance of the RadCon Program office relative to subcontractor oversight was evaluated using the following criteria:

TFC-BSM-CP_CPR-C-05, *Procurement of Services* states,

> *Working with Project Management, ES&H, and Quality Assurance, develop subcontractor oversight plans in accordance with TFC-ESHQ-S_SAF-C-07. (7.1.4)*

TFC-ESHQ-S_SAF-C-07, *Subcontractor Oversight* states,

> *4.2.1 Complete the Subcontractor Oversight Plan (A-6003-991) screening Section I to determine if a subcontractor oversight plan is required.*

Interviews with the BTR for the PNNL SOW indicates no subcontractor oversight was in place ~~plan has been developed~~ and form A-6003-991 was not completed to determine if it is needed. The required form was developed during the assessment. Because of this, the issue is noted but does not require corrective actions and is not shown as an observation or finding.

~~This is documented in Finding 03: TFC-ESHQ-S_SAF-C-07, *Subcontractor Oversight*, requires that contracts be screened to determine the need for subcontractor oversight plans. Contrary to this requirement, no screening was performed for contract and release number 36437-18, *Instrumentation and Radioactive Source Calibration Services.*~~

Pacific Northwest National Laboratory performance under the statement of work was evaluated. Records were requested from PNNL relative to three items:

- Second quarter of 2008 Out of Tolerance Reports
- Documentation of completion of the following SOW action

  PNNL will perform an annual evaluation of instrument as-found out-of-tolerance (OOT) performance, and identify instruments where more than fifteen (15) percent of the average in-service population exceeds this threshold. Included in this review will be instruments that have repeated OOTs for consideration of retirement from the program.
- Evidence of correction actions associated with:
  - Reported cases of bench monitor alpha probes not meeting the required minimum efficiency
  - Purchase of equipment with fraudulent NRTL labeling.

The second quarter out of tolerance reports were provided as required.

The SOW action had not been completed. Interviews with the responsible manager indicated the activity was not performed.

No corrective action was taken relative to the bench monitor alpha probe efficiency based on the initial report from the TOC. However, during the assessment the issue was corrected. The failure to initiate corrective actions when the issue was identified reflects a potential weakness in the corrective action system required by 10 CFR 830.122.

For the purchase of equipment with fraudulent NRTL labeling, PNNL provided the results of an extensive evaluation with effective actions taken.

The general performance of PNNL relative to the criteria contained in the SOW was not evaluated beyond those areas identified. All specific issues identified were corrected by PNNL management during the assessment.

The conditions result in Observation 05- Weaknesses in the implementation of the statement of work for instrumentation services by the calibration services provider (PNNL) were observed in that required actions were not taken and corrective actions to address identified deficiencies were not taken in a timely manner.

The subcontractor oversight plan developed by the Radiological Control Program office addresses these issues. Because the implementation of the subcontractor oversight plan is pending, this issue is included as an observation.

5.12 PERs written on Out-of Tolerance Air Samplers

TFC-ESHQ-RP_INS-P-05, *Radiation Protection Instrument Program*, requires out of tolerance reports be evaluated by radiological controls. This process, for air samplers, is initiated by the work order form for calibrations of air samplers, which states:

> *Radcon Engineering notified of any out-of-tolerance value.*
> *yes ___ No ___ N/A ___*

A review of the calibration data sheets identified that out-of-tolerance was checked "yes" numerous times.

A sample of "out-of-tolerance" conditions were reviewed to see if PERs were written and if analysis was performed to determine the effect this condition had on previous instrument readings. For example, an air sampler may have collected other than the anticipated amount of air/radioactive particulates and could have mis-estimated the actual airborne radioactive concentration present at the sample location.

Of eight out-of-tolerance conditions reviewed, seven had PERs written and analysis performed.

WFO-WO-08-0737, Radeco Air Sampler, Serial # unreadable, identifier # 272AS005:CH2M-PER-2008-0649 was written and it contains analysis.

WFO-WO-08-0739, Radeco Air Sampler, Serial # 8497, identifier # 272AS012: No PER was located. Upon notification that no PER had been initiated, Base Operations RadCon wrote WRPS-PER-2009-0011.

WFO-WO-08-0740, RadeCo Air Sampler, Serial # 8923: CH2M-PER-2008-0652 was written and it contains analysis.

WFO-WO-08-0747, Air Sampler, Serial # 8970: CH2M-PER-2008-0650 was written and it contains analysis.

WFO-WO-08-1276, Air Sampler, Serial # 8927: CH2M-PER-2008-0653 was written and it contains analysis.

WFO-WO-08-1278, Air Sampler, Serial # 8956: WRPS-PER-2008-0089 was written and it contains analysis.

TFC-WO-08-1268, Air Sampler, Serial # 8122: WRPS-PER-2008-0092 was written and it contains analysis.

TFC-WO-08-1273, Air Sampler, Serial # unreadable, identifier # 272AS005: WRPS-PER-2008-0090 was written and it contains analysis.

The single air sample lacking a PER was in Base Operations East. The process and practice is in place to perform and effective evaluation. This single instance was not considered an instance requiring additional corrective action.

5.13 Training

With the exceptions noted in the previous sections of the report relative to temperature controls for determining air sample volumes, the training of Health Physics technicians for the use of instrumentation is complete, well documented, and implemented as provided.

As a calibration service provider the training of the crafts involved in the calibration of radiological instrumentation was reviewed. The criteria fall into two categories completion of training and training records.

TFRCM, Part 6, Instrumentation and Calibration Records, Article 761, Calibration and Operational Checks, item 1 states:

> *Results of calibrations performed on instruments and equipment used for monitoring individuals, materials and areas as required by this Manual shall(835.703(d) be documented and maintained and shall include frequencies, method, dates, personnel, training and traceability of calibrations sources to National Institute of Science and Technology or other acceptable standards (HSD J.6)[RPP #183}*

The applicable 10CFR 835 is the source for the requirements to maintain the records:

> *835.703 Other Monitoring Records*
> *(d) Results of maintenance and calibration performed on instruments and equipment as required by § 835.401(b).*

The TFRCM provides the content requirement for the records that includes training, as noted in 761.1, listed above.

Queries of maintenance and training staff as well as queries of individual training records of instrument technicians showed no record of training provided relative to calibration of radiological instrumentation. At the 222-S laboratory, vender training was provided to instrument technicians for the implementation of the

PCM-2 monitors. However, the records were maintained in the workers field files as opposed to being made part of the training records. As a result, records were not maintained for training as required by the TFRCM article 761.1. Finding 045: TFRCM 761.1 requires results of calibrations performed on instruments and equipment used for monitoring individuals, materials, and areas as required by this Manual shall [835.703(d)] be documented and maintained and shall include frequencies, method, dates, personnel, training and traceability of calibration sources to National Institute of Science and Technology or other acceptable standards [HSD J.6]. Contrary to this requirement, training records for persons responsible for calibrating PCM-2 instruments was not maintained as required.

The requirement to perform training is driven by multiple documents:

DOE O 433.1, *Maintenance Management Program for DOE Nuclear Facilities,* states:

> *Training and Qualification of Maintenance Personnel. A maintenance training and qualification program must be implemented to develop and maintain the knowledge and skills needed by maintenance personnel to effectively perform maintenance activities. [See DOE 5480.20A; DOE O 414.1A; DOE G 433.1-1, Section 4.2; DOE-HDBK-1206-98; DOE-HDBK-1003-96; 10 CFR 830.122(b); and DOE G 450.4-1B, ISMS Principle 3.]*

At WRPS this is implemented by TFC-PLN-29, *Maintenance Implementation Plan*, Section 2.0, Maintenance Implementation Process, section 4, states;

> *b. A maintenance training and qualification program is implemented to develop and maintain the knowledge and skills needed by maintenance personnel to effectively perform maintenance activities.*
>
> *c. The maintenance managers and first line managers are directly involved in training maintenance personnel. This involvement, as a minimum, includes close coordination with the TFC training organization to establish and maintain course content and emphasis, determine and support training schedules, accomplish on-the-job training (OJT), and provide feedback to adjust course content and emphasis as necessary.*

Other relevant guidance includes DOE 5480.20A, which states in section 5, Qualification Process Requirements, item c:

> *Technician and maintenance personnel qualification shall include demonstrated performance capabilities (performance demonstrations) to ascertain their ability to adequately perform assigned tasks. Written examinations should also be administered to personnel in these positions. However, a comprehensive final examination need not be administered to ascertain formal qualification of technicians and maintenance personnel*

(with the exception of radiological control technicians, who shall comply with the requirements of the DOE Radiological Control Manual). Participation in continuing training programs is required to maintain and improve their abilities to continue to function safely in the operating organization. The requirements that are described in Chapter I, paragraph 7d, shall be implemented to the extent to which they apply to the position. Their continued satisfactory performance of assigned duties and their satisfactory participation in the continuing training program (classroom, OJT, laboratory, etc.) serves as sufficient evidence of maintenance of their qualification.

Numerous other references discuss the need for training. The best summary of the issue can be found in Life-Cycle Training Requirements for DOE Nuclear Facilities DOE Order 5480.20A which states:

DOE 5480.20A requires that a systematic approach to training (SAT) be used to establish training programs for operating organization personnel. Procedures that govern SAT processes are generic and may be obtained from other facilities in DOE and be used with minor modifications. DOE-HDBK-1078-94, Training Program Handbook: A Systematic Approach to Training, contains guidance for systematically establishing training programs. DOE-HDBK-1074-95,Alternative Systematic Approaches to Training, offers other approaches and methods that have proven useful for establishing training programs. Regardless of the approach taken, analysis of the job is required to determine the necessary training. If the job changes due to mission or operational phase changes, further analysis is necessary to determine if more or less training is appropriate.

In the past three years the role of the TOC as a calibration services provider has expanded. The best example of this is the 2704 HV count room which contains two gamma spectroscopy units, one alpha spectroscopy unit, one alpha beta proportional counter and a liquid scintillation counter. No unique training is required to perform calibrations on this equipment. When installed, a single instrument technician followed the process and was involved in establishing the calibration procedures and the data sheets. The knowledge level of the technician is good. However there was no application of the systematic approach to training to determine if training for him, or other instrument technicians is needed for this equipment.

The method for performing needs analysis is covered in TFC-BSM-TQ_ADD-C-01 *Training Analysis, Design, And Development.* None of the personnel interviewed indicated this process had been applied to determine if the task of performing calibrations of radiological instrumentation and equipment required training. This results ~~in Finding~~in Finding 034: DOE Order 5480.20A, *Personnel Selection, Qualification, and Training Requirements for DOE Nuclear Facilities,* requires a training program be based on a systematic analysis of the job

Formatted: Font: Not Bold

Formatted: Font: Not Bold

to be performed. Contrary to this requirement, no job task analysis has been performed to determine the training needs for personnel performing calibration of radiological instrumentation and equipment at Tank Farms.

6.0 Assessment Conclusions

The assessment evaluated compliance to the requirements of HNF-MP-5184, *CH2M HILL Hanford Group, Inc. Radiation Protection Program* (RPP) relating to referenced portions of 10 CFR 835 as implemented by company program and procedures. The assessment determined that the company's program and procedure implementation are sufficient to demonstrate compliance with 10 CFR 835, with the exceptions noted.

7.0 ~~Personnel Contacted~~PERSONNEL CONTACTED

Name	Organization	Contacted	Entrance	Exit
Berman, H. S.	Engineering	X		
Bickel, E. E.	Base Operations Radiological Controls	X		
Cato, D. M.	Systems Engineering and Integration Support	X		
Hudspeth, E.R.	Base Operations Maintenance	X		
Rolph, J. T.	Radiological Controls	X	-	X
Hasty, B. A.	Information Resources	X		
Murphy, M. K.	PNNL	X		X
Almeida, T. L.	PNNL			X
Haggerty, B. A.	Base Operations Maintenance	X		
Hanni, J. B.	Radiological Controls	X		
Duffy, W. L.	SST Retrieval and Closure Radiological Controls	X		
Aldridge, G. E.	Base Operations Maintenance	X		
Jones, R. W.	Base Operations Maintenance	X		
Heinemann, J. L.	222-S Laboratory Maintenance	X		
O'Nieill, P. M.	222-S Laboratory Maintenance	X		
Bishop, W. W.	Base Operations Radiological Controls	X		
Huddleston, L. B.	Base Operations Radiological Controls	X		
Toon, J. M.	Base Operations Radiological Controls	X		
Meyer, K. L.	Base Operations Radiological Controls	X		
Young, M. H.	SST Retrieval and Closure Radiological Controls	X		
Seely, K. R.	SST Retrieval and Closure Radiological Controls	X		
Vacca, J. E.	Information Resources	X		
Klein, R. J.	SST Retrieval and Closure Radiological Controls	X		
Dupaquier, J. C.	Base Operations Radiological Controls	X	X	
Jansons, R. S.	Office of River Protection		X	
Tucker, R. P.	Base Operations Maintenance	X	X	

Formatted Table

Formatted Table

8.0 ~~Documents Reviewed~~DOCUMENTS REVEIWED

1. HNF-MP-5184, *CH2M HILL Hanford Group, Inc. Radiation Protection Program*
2. HNF-5183, *Tank Farms Radiological Control Manual (TFRCM)*
3. DOEG441.1-1B, *Radiation Protection Programs Guide*
4. DOE O 433.1, *Maintenance Management Program for DOE Nuclear Facilities*
5. *DOE-HDBK-1118-99, October 1999, Guide to Good Practices for Continuing Training*
6. DOE 5480.20A *Personnel Selection, Qualification, and Training Requirements for DOE Nuclear facilities*
7. DOE G 441.1-1C, *Radiation Protection Programs Guide for Use with Title 10, Code of Federal Regulations, Part 835, Occupational Radiation Protection*
8. TFC-ESHQ-RP_INS-P-05, *Radiation Protection Instrument Program*
9. TFC-OPS-MAINT-C-01, REV N-6, *Tank Farm Contractor Work Control*
10. TFC-BSM-CP_CPR-C-05, *Procurement of Services*
11. TFC-ESHQ-S_SAF-C-07, *Subcontractor Oversight*
12. TFC-OPS-MAINT-C-07, *Control And Calibration Of Measuring And Test Equipment*
13. TFC-BSM-TQ_ADD-C-01 *Training Analysis, Design, And Development*
14. TFC –PLN-29, *Maintenance Implementation Plan*
15. TFC-PLN-61, REV A-7, *Tank Operations Contractor Training And Qualification Plan*
16. Statement of Work, contract and release number 36437-18, *Instrumentation and Radioactive Source Calibration Services*
17. WRPS-PER-2008-0201
18. CH2M-PER-2008-0380
19. CH2M-PER-2008-1544
20. CH2M-PER-2006-2015
21. CH2M-PER-2005-4261
22. CH2M-PER-2005-4260
23. CH2M-PER-2005-4263
24. CH2M-PER-2008-0649
25. WRPS-PER-2009-0011
26. CH2M-PER-2008-0652
27. CH2M-PER-2008-0650
28. CH2M-PER-2008-0653
29. WRPS-PER-2008-0089
30. WRPS-PER-2008-0092
31. WRPS-PER-2008-0090
32. TFC-ENG-FACSUP-C-23, Equipment Identification and Data Management.
33. 2S18049: *Eberline Personnel Contamination Monitor Model PCM-2*
34. 2S18052: *Eberline HFM-6 Hand and Foot Monitor*
35. 2S18058: *Eberline Beta Air Monitor, Models AMS-3, AMS-3A, AMS-3A-1, and 700300*
36. 2S18060: *Eberline Personnel Contamination Monitor, Model PCM-1B*

Formatted: Bullets and Numbering

37. 2S18062: *Eberline Radiation Monitor(s) Models HFM-6, PCM-1B and PCM-2 Cleaning, Inspection and Replaced Detector Efficiencies*
38. 2S18065: *Air Grab Samplers*
39. A-6003-991- *Complete the Subcontractor Oversight Plan*

Approval

Formatted: Left

Bob Brown
~~1.~~ Team Leader Signature on File Date 1/26/09 ~~HNF-MP-5184, *CH2M HILL Hanford Group, Inc. Radiation Protection Program*~~
~~2.HNF-5183, *Tank Farms Radiological Control Manual (TFRCM)*~~
~~3.DOEG441.1-1B, *Radiation Protection Programs Guide*~~
~~4.TFC-ESHQ-RP_INS-P-05, *Radiation Protection Instrument Program,*~~
~~5.TFC-OPS-MAINT-C-01, REV N-6, *Tank Farm Contractor Work Control*~~
~~6.TFC-BSM-CP_CPR-C-05, *Procurement of Services*~~
~~7.TFC-ESHQ-S_SAF-C-07, *Subcontractor Oversight*~~
~~8.TFC-PLN-61, REV A-7, *Tank Operations Contractor Training And Qualification Plan*~~
~~9.5480.20A *Personnel Selection, Qualification, and Training Requirements for DOE Nuclear facilities*~~
~~10.DOE-HDBK-1118-99, *October 1999, Guide to Good Practices for Continuing Training*~~

Formatted: Bullets and Numbering

Formatted: Underline

Formatted: Left

Tino Maciuca
Team Leader
Manager Signature on File Date 1/26/09

Attachment A

Assessment Plan

Specialty Assessment FY2009-ESHQ-S-0327,

Triennial Assessment Program,

10 CFR 835.401(b)

Purpose

The purpose of this assessment is to assess compliance to the requirements of HNF-MP-5184, *CH2M HILL Hanford Group, Inc. Radiation Protection Program* (RPP) relating the referenced portions of 10 CFR 835 as implemented by procedures, programs, and plans.

Scope

This assessment will include evaluations at Base Operations, Retrieval & Closure Operation, and program functions.

Pacific Northwest National Lab support functions done in accordance with Requisition # 36437-18 revision 6a, *Instrumentation and Radioactive Source Calibration Services*, will be included in the assessment.

The Integrated Management Safety System (ISMS) levels for this assessment include both company and facility levels.

Assessment Team

Bob Brown will be the team lead for the assessment with support from Lee Penick. Bob Brown and Lee Penick have completed Course # 350322 - Assessment Techniques. Bob Brown has completed Course # 350319 - Management Assessment Team Leader

Assessment Schedule

The assessment is planned to be conducted between December 17, 2008 and January 15, according to the following schedule:

- Entry Meeting- December 17, 2008.
- Field Work- December 17, 2008 to December 30, 2008.
- Exit Meeting-January 5, 2009
- Draft Report- January 7, 2009
- Final Report- January 15, 2009

Performance objectives and criteria, including source information used to perform the assessment, and implementing documents and checklists developed

The objectives of this assessment are to:

- Assess compliance with and implementation of 10 CFR 835.401(b) and HNF-MP-5184 requirements 76, 77, and 78, as shown in Section VII, Requirements Matrix.
- Follow-up on the effectiveness of corrective actions from previous assessment.
- Perform a limited review of the application of training by personnel.

Implementing documents reviewed:

- HNF-MP-5184, CH2M HILL Hanford Group, Inc. Radiation Protection Program
- HNF-5183, *Tank Farms Radiological Control Manual (TFRCM)*
- DOEG441.1-1B, *Radiation Protection Programs Guide*
- ANSI N323 (1978) – *Radiation Protection Instrumentation Test and Calibration*

Within the context of ISMS, elements applicable to this assessment are as follows:

- Ensuring Competence Commensurate with Responsibilities ISMS Guiding Principle No. 3,
- Hazard Controls Tailored to Work Being Performed, ISMS Guiding Principle No. 6,
- Develop and Implement Hazard Controls, ISMS Core Function No. 3
- Provide Feedback and Continuous Improvement, ISMS Core Function No. 5.

Assessment Approach and Methodology

The assessment will rely on:

- Objective evidence of the implementation of the program through the review of documentation.
- Interviews with personnel involved in development and implementation of instrumentation and calibration.
- Observations of the performance of personnel or documentation of activities, and comparison with the training for the activities.
- Interviews/surveys of managers and employees who oversee or perform work in radiological areas or with radiological materials.

The lines of inquiry are based on *Radiation Protection Lines of Inquiry for Assessing Compliance with 10 CFR 835* as provided on the Office of Health, Safety and Security website http://www.hss.energy.gov/healthsafety/WSHP/radiation/rule.html, and implementing documents noted above.

4.0 PREREQUISITES

4.1 Special Tools, Equipment and Supplies

The following supplies may be needed to perform this procedure:

- Calibration labels, as required.
- Hearing protection, as required.
- Flow calibrator - Sierra Mass Flowmeter (0-8 CFM) or equivalent, ± 1.25 % or better.
- AC power cord.
- Torque Seal compound.
- Versapor 3000(T), Fluoropore, or filter media to be used in field.
- Limited Calibration Sticker.
- "Calibration Void If Seal Damaged" Sticker
- Other tools, equipment and supplies as identified by Shift Manager/OE/FWS/User.

4.0 PREREQUISITES

4.1 Special Tools, Equipment and Supplies

The following supplies may be needed to perform this procedure:

- Calibration labels, as required.
- Hearing protection, as required.
- Mass flowmeter, size applicable to rotameter to be calibrated.
- Stop watch or other timing device.
- Vacuum gauge (0-30 inches of Hg)
- AC power cord.
- Torque Seal compound.
- Versapor 3000(T), Fluoropore, or filter media to be used in field.
- Limited Calibration Sticker.
- "Calibration Void If Seal Damaged" Sticker
- Other tools, equipment and supplies as identified by Shift Manager/OE/FWS/User.

Save

Problem Evaluation Request (PER)

WRPS-PER-2009-0152
In Process/Work

PER No	Date of Discovery	Time of Discovery (24:00)	Project
WRPS-PER-2009-0152	01/26/2009	10:00	RadCon Programs

Location

Admin Facilities

How Was Problem Discovered

Self Assessments

Description of Concern or Problem

Specialty Assessment FY2009-ESHQ-S-0327 on compliance with 10 CFR 835.401(b) was performed between December 17, 2008 and January 7, 2009. This report resulted in four findings and five observations.

Finding 02: TFRCM 555.5 states: Calibrations should be performed annually at the atmospheric pressure and temperature conditions that are expected during sampling conditions, or the appropriate correction factor should be applied during the calculation of the flow rate (bold added for emphasis). NUREG 1400, section 5.5, Pressure and Temperature, states that if the temperature varies by enough to cause the measured volume to vary by more than 5% then the temperature should be corrected for. Additionally, TFRCM Article 562 states: The effects of environmental conditions, including interfering radiation, on an instrument shall [835.401(b)(3)] be known prior to use. Contrary to these requirements, the effect of temperature on the sampled volume for air samplers is not addressed in training, technical basis documents, or procedures for work place air sampling.

Requirement Not Satisfied	Source Document Number
	Specialty Assessment FY2009-ESHQ-S-0327
Equipment Identification Number	**System Identification**

Immediate actions Taken or Planned

Communicated to affected management.
Initiated PER.

Recommended Corrective actions

Modify TFC-0504-FCDMP-018, Workplace Air Monitoring Standards. to address temperature correction criteria and modify implementing documents and training to include modified criteria.

Originator Contact

Include the IA box on PER closure.

Originators Name	Originators ID	Originators Phone	Date Initiated
Brown, Robert L	H0000967	(509) 372-2932	01/26/2009

SHIFT OPERATIONS REVIEW

Title

Calibrations on air samplers

How Discovered	Agency
self-ID prior to event	

Reportability	SSC Operability	Operability Review	Comp Measures Req
Non-Reportable	N/A	N/A	

Describe actions Taken or Recommended

No additional Base Ops Shift Office actions required.

SO Reviewer Name	SO Reviewer ID	SO Reviewer Phone	SO Review Date
Johnson, Brian A	H0003531	(509) 373-2696	01/26/2009

SCREENING

PER Significance Level	
PER with Resolution	

Independent Assessment Review	Occurrence Report Number	Externally Identified	
Yes		No	
Assigned Responsible Manager	**Facilities Rep / SSO**	**Safety Management Rep**	
Rolph, Jim T			
Program		**Safety Management Program**	
• N/A		• Radiological Control	
PER Screening Comments			
PER w/ Res with informal Apparent Cause Analysis (Nancy Brown 01/27/09).			
Causal Code			
MGT/Comm/Train	**Human Performance**	**GEMS**	**Equip/Eng/Other**
Failed Barrier	**ORPS Code**	**Functional Area**	**Work Process**
	Not Applicable	Radiation Protection	• Assessments • Radiological Instrumentation
ISMS	**Consequence Code**		
Perform work within the controls	• Rad Inst - Documentation - Calibration, source response check, qualification, or procedural record related issues (e.g. accuracy, completeness, retrievability)		
PER Screening Chair	**PER Screening Chair ID**	**PER Screening Chair Phone**	**PER Screening Date**
Brown, Nancy L	H0088797	(509) 373-0992	01/27/2009
PAAA REVIEW			
PAAA Screening	**PAAA Codes**	**Function Codes**	
PAAA, Non-NTS Reportable	• 10 CFR 835.401 (b)(1)	• M&TE (control and calibration) • Procedure Quality • RadCon Monitoring	
NTS Report Number	**NTS Report Date**		
Repetitive / Recurrent	**Programmatic**	**Intentional Violation / Misrepresentation**	
No	No	No	
PAAA Screening Comments			
PAAA Reviewer Name	**PAAA Review Date**		
Anderson, Craig E	01/27/2009		
PAAA Approver Name	**PAAA Approve Date**		
Anderson, Craig E	01/28/2009		
SENIOR MANAGEMENT REVIEW/CONCURRENCE			
TF Operations Morning Leadership Call			
N/A			
Instructions for Responsible Manager			
Review the PER Screening Tab and Senior Manager Review for requested data. Complete the task in E-STARS in accordance with TFC-ESHQ-Q_C-C-01, and TFC-ESHQ-Q_ADM-C-12 Apparent Cause Analysis & Corrective Action Planning.			

Senior Management	Sr Mgmt ID	Sr Mgmt Phone	Sr Mgmt Review Date
Brown, Nancy L	H0088797	(509) 373-0992	01/28/2009

CAUSE ANALYSIS

Description of Occurrence

Quality Assurance Specialty Assessment identified that correction factor should be applied when calculating flow rate and should be addressed in the FCDMP-018.

Extent of Condition

none

Safety Significance

The safety significance is low.

Generic Implications

Remedial Corrective Action

The TFC-0504-FCDMP-018, Workplace Air Monitoring Standards already addresses temperature correction criteria (p. 12 "Calibrations should be performed annually at the atmospheric pressure and temperature conditions that are expected during sampling conditions, or the appropriate correction factor should be applied during the calculation of the flow rate."). The FCDMP-018 provide general RadCon Program direction and requirements. It is more appropriate for the RadCon Projects (BO & RCO) to provide specific direction to implement the general requirements.

RadCon Program CTA suggest that RadCon FPOCs provide specific directions to the field on when and how to apply the correction factor based on specific job scope and equipment used in the field. RadCon FPOCs should provide the specifics in the BO and RCO air sampling tech basis document.

Although flow measurements results are accurate enough, corrects can be made to improve the accuracy of air flow measurments made in the field when temperatures are greater than 95 degrees F. Although the Program plans to replace the rotometer type air samplers before the end of the year with air samplers that correct for temperature and pressure, we will make this change although the existing air samplers have and continue to be used here at Hanford and other DOE complexes without any correction being performed.

Causal Analysis, Apparent Cause and/or Root Cause Analysis

This PER incorrectly identified the 'recommended corrective actions'. The PER originator did not recognized that the FCDMP-018 already addressed the correction factor. Implementation of the FCDMP-018 (containing the correction factor) should have been the real issue.

CORRECTIVE ACTIONS

Actionee	Action Due Date	E-STARS Number
Le, Tuyet M	07/06/2009	

Action

Revise TFC-ESHQ-RP_MON-P-09, Air Grap Sampling procedure to correct flow when sampling in air temperatures greater than 95 degree F.

Corrective Action Attachments

ATTACHMENTS

Link to PER

Instrument Triennial Assessment Report Issued.doc

WRPS-PER-2009-0152 Ext Req.pdf

AUDIT HISTORY

Change Date	Auditor	Comments
01/28/2009 08:39	Brown, Nancy L	Responsible Manager Task Launched by Brown, Nancy L
05/28/2009 14:16	Rolph, Jim T	Change to Cause Analysis screen/Corrective Action plan.
05/28/2009 14:21	Rolph, Jim T	Change to Cause Analysis screen/Corrective Action plan.

05/28/2009 14:26	Rolph, Jim T	'Remedial Corrective Action' was changed.

-- End of Report --
07/09/2009 08:56 AM

Task# WRPS-PER-2009-0152

E-STARS[R] Report
Task Detail Report
07/09/2009 0856

TASK INFORMATION			
Task#	WRPS-PER-2009-0152		
Subject	RES; Calibrations on air samplers		
Parent Task#		**Status**	Open
Reference		**Due**	05/05/2009
Originator	^PER Coordinator	**Priority**	Medium
Originator Phone		**Category**	PER
Origination Date	01/26/2009 1006	**Generic1**	None
Remote Task#		**Generic2**	None
Deliverable	PER Review	**Generic3**	None
Class	None	**View Permissions**	Global
Instructions	*No Instructions*		

ROUTING LISTS

1	Responsible Manager	Active
	Return for Rework: Complete PER Resolution and Apparent Cause Analysis Description of Occurrence: According to the entry in the Causal Analysis field, the review of the PER determined the issue was miss-identified in the assessment. The issue that needs to be resolved is the implementation of the FCDMP-018. *Please clarify the problem statement to indicate the implementation issue is being addressed by the resolution of this PER. Extent of Condition: *Please provide the reasoning used to determine "none". Safety Significance: *Please proved the reasoning used to determine "The safety significance is low." Remedial Corrective Actions: Remedial Actions are completed actions, not suggestions or recommendations. *Please launch Corrective Actions to the RadCon Projects to provide direction to implement the requirements. *Please launch Corrective Actions RadCon FPOCs to provide specific directions in the air sampling tech basis document(s) on when and how to apply the correction factor based on specific job scope and equipment. Causal Analysis, Apparent Cause and/or Root Cause Analysis: *Please perform an Informal Apparent Cause Analysis. Provide the results in the Apparent Cause Analysis Field and enter the corresponding cause code(s) into the Causal Code field. Corrective Actions: *Make sure there are corrective actions that address the identified cause(s). L Glaman	
	• Rolph, Jim T - Assign - Completed - 05/08/2009 1721 *Instructions:* ↳ *Routing List:* Route List - Inactive *Instructions:* Please review and evaluate the issue raised in the PER. If required initiate corrective actions to program documents as required. If no actions are required provide basis for the reasoning behind why no change is required. Involve the FPOCs as appropriate.	

Task# WRPS-PER-2009-0152

	• Le, Tuyet M - Assign - Completed with comments - 05/08/2009 1553	
	• Rolph, Jim T - Assign - Completed - 05/08/2009 1722 *Instructions:* Did you contact the originator about the PER? Document your contact in the response window.	
	• Rolph, Jim T - Assign - Completed with comments - 05/28/2009 1431 *Instructions:* Discussed with Company Technical Authority for WPAS and identified specific issues needing addressed. Included corrective actions and extent of condition. Bob Brown	
	• ^Independent Assessment Review(Brown, Robert L) - Review - Concur with comments - 05/28/2009 1533 *Instructions:* Independent Assessor Review	
	• Rolph, Jim T - Assign - Delegated - 06/23/2009 0720 *Instructions:* ↳ *Routing List:* Route List - Active *Instructions:* Follow rework instruction and address all questions. • Le, Tuyet M - Assign - Awaiting Response	
	• ^Independent Assessment Review - Review - Awaiting Response - Due Date - 05/05/2009 1630 *Instructions:*	
2	Review Initial PER	Inactive
	Review New PER	
	• ^SO(Johnson, Brian A) - Review - Concur - 01/26/2009 1010 *Instructions:*	
	• ^PER Screening(Brown, Nancy L) - Review - Concur - 01/27/2009 1440 *Instructions:*	
	• ^Mgr Review - Review - Cancelled - 01/28/2009 0839 *Instructions:*	

ATTACHMENTS

Attachments	1. Link to PER 2. Instrument Triennial Assessment Report Issued.doc 3. WRPS-PER-2009-0152 Ext Req.pdf

COMMENTS

Poster	Brown, Robert L - 01/26/2009 1008
	Recommended Touting
	Recommend routing to the Radiological Control Program Office as a PER with Resolution.
Poster	^PER Coordinator (Owen, Annette) - 03/11/2009 0838
	1st extension to 4/28/09 per form A-6003-227. (NO CAs)
	Other WRPS priorities have prevented significant work to take place on this PER in more depth than collecting preliminary informationand data. The concern wraised in the PER regarding temperature and pressure correction factors was reviewed for impact on the existing air sampling analysis with the conclusion that air sampling in cold weather our total flow would be higher than indicated, thus our air sampling analysis would be conservative. Temperatures greater than 95-98 degress F may be a different matter, so time exist to extend the due date of this PER since temperatures where correction factors may be warranted are a few months away. Additionally we ordered in January samples of possible air samplers that we may use to replace the existing inventory that correct for temperature and pressure while in use. The extensionis required to adequately address this PER. James Rolph
Poster	Le, Tuyet M - 05/08/2009 1553
	Completed

Task# WRPS-PER-2009-0152

	RadCon Program has committed resources to perform a major revision to FCDMP-018 by September 2009 and will evaluate if there is still a need to provide specific direction on when/how to apply the correction factor. Bioassay results and field surveys have not given RadCon Program reasons to believe that the (lack of applying) correction factor to air sampling equipment (in the past) when the temperature exceed 95 degrees F is a safety concern. In the mean time, the BO and RCO Facility Points of Contact (FPOC) Health Physicists will need to provide specific direction in the field on the appropriate correction factor based on the specific air sampling equipment used in the field, the specific job scope, and how to apply the correction criteria when temperature exceeds 95 degrees F.
Poster	Rolph, Jim T - 05/28/2009 1430
	An assignment has been made to add temperature correction to TFC-ESHQ-RP_MON-P-09 Grap Air Sampling procedure to improve the accuracy of flow measurments when temperatures are greater than 95 degrees F. There is no adverse issue to the existing air sampling practice as air sampling and bioassay results show an adverse conditions. Other DOE sites and Hanford Contractors are not correcting their results for air temperature. WRPS intends to replace the rotometer air samplers with temperature and pressure corrected one before the end of the year.
Poster	Rolph, Jim T - 05/28/2009 1431
	Completed
	Corrective action initiated.
Poster	^Independent Assessment Review (Brown, Robert L) - 05/28/2009 1533
	Concur
	Discussed with initiator. Will review the EOC requiremnets. Concurr with corrective action.

TASK DUE DATE HISTORY

Modified	03/11/2009 0829 - ^PER Coordinator (Owen, Annette)	**New Due Date**	05/05/2009 1630
Modified	01/28/2009 0839 - ^PER Coordinator	**New Due Date**	03/12/2009 1630
Modified	01/28/2009 0839 - ^PER Coordinator	**New Due Date**	03/16/2009 1630
Modified	01/26/2009 1006 - ^PER Coordinator	**New Due Date**	01/28/2009 1630

SUB TASK HISTORY

Subtask#	WRPS-PER-2009-0152.1	
Subject	RES; Calibrations on air samplers	
Originator	Le, Tuyet M	
	Routing List	*No Active Routing List*

-- end of report --

Specialty Assessment FY2009-ESHQ-S-0327,
Triennial Assessment Program,
10 CFR 835.401(b)
Radiological Instrumentation

A specialty assessment on compliance with 10 CFR 835.401(b) was performed between December 17, 2008 and January 7, 2009. This report discusses the purpose, scope and results of the assessment.

1.0 EXECUTIVE SUMMARY

The assessment determined that the company's program and procedure implementation are sufficient to demonstrate compliance with 10 CFR 835.401(b) but based on the findings and observations noted, the program can be improved.

The assessment evaluated compliance to the requirements of HNF-MP-5184, *CH2M HILL Hanford Group, Inc. Radiation Protection Program* (RPP) relating to referenced portions of 10 CFR 835 as implemented by company program and procedures.

The assessment is performed at greater than three years from the previous instrumentation assessment, but within the 30 days provided by 10 CFR 835.3(e):

> *For those activities that are required by -835.102, 835.901(e), 835.1202(a), and 835.1202(b), the time interval to conduct these activities may be extended by a period not to exceed 30 days to accommodate scheduling needs.*

The assessment resulted in ~~five~~ four Findings and five Observations as discussed in section 5.0, Assessment Results.

Noted weaknesses in include:

- Ineffective corrective actions
- Craft training and training records
- Program ownership and defined responsibilities
- Technical content at the programmatic level
- Subcontractor oversight

No issues were noted in the day to day operation of instruments by health physics technicians, instrument selection, or knowledge level of persons performing calibrations. Where provided, training is effectively implemented in the field.

Project staff aggressively addressed any significant issues noted and, as discussed in the report, corrected several issues immediately.

2.0 PURPOSE

The assessment evaluated compliance to the requirements of HNF-MP-5184, *CH2M HILL Hanford Group, Inc. Radiation Protection Program* (RPP) relating to referenced portions of 10 CFR 835 as implemented by company program and procedures. This assessment also was used to determine the extent of calibration issues associated with **CH2M-PER-2008-1529.**

3.0 SCOPE

This assessment will include evaluations at Base Operations, Retrieval & Closure Operation, and program functions.

Pacific Northwest National Lab support functions done in accordance with contract and release number 36437-18, *Instrumentation and Radioactive Source Calibration Services*, are included in the assessment.

The Integrated Management Safety System (ISMS) levels for this assessment include both company and facility levels.

4.0 ASSESSMENT APPROACH AND METHODOLOGY

The assessment relied on:

- Objective evidence of the implementation of the program through the review of documentation.
- Limited Field Observations.
- Interviews/surveys of managers and employees with defined responsibilities for performing work associated with radiological instrumentation.

5.0 ASSESSMENT RESULTS

The assessment determined that the company's program and procedure implementation are sufficient to demonstrate compliance with 10 CFR 835.401(b) but based on the findings and observations noted, the program can be improved.

5.1 Findings

Finding 01: TFRCM 555.5 states that ANSI N42.17B indicates air flow meters, differential pressure indicators, and other devices used to determine volumetric flow rates of air samplers and monitors should be calibrated to within ±15% of the true reading. ANSI N42.17B requires that a flow meter with an accuracy of ±2% be used to perform this calibration. Contrary to these requirements air sampling procedures in use at tank farms allow the use of flow meters with a calibration accuracy of ±5%. - (WRPS-PER-2009-0151) ~~(NOTE: Procedure changes have been initiated. If approved this finding goes to a noted, but corrected issue)~~

Finding 02: TFRCM 555.5 states: Calibrations should be performed annually at the atmospheric pressure and temperature conditions that are expected during sampling conditions, **or the appropriate correction factor should be applied during the calculation of the flow rate** (bold added for emphasis). ~~NuReg 1400~~NUREG 1400, section 5.5, Pressure and Temperature, states that if the temperature varies by enough to cause the measured volume to vary by more than 5% then the temperature should be corrected for. Additionally, TFRCM Article 562 states: The effects of environmental conditions, including interfering radiation, on an instrument shall [835.401(b)(3)] be known prior to use. Contrary to these requirements, the effect of temperature on the sampled volume for air samplers is not addressed in training, technical basis documents, or procedures for work place air sampling. (WRPS-PER-2009-0152)

~~Finding 03: TFC-ESHQ-S_SAF-C-07, *Subcontractor Oversight*, requires that contracts be screened to determine the need for subcontractor oversight plans. Contrary to this requirement, no screening was performed for contract and release number 36437-18, *Instrumentation and Radioactive Source Calibration Services*.~~

Finding 0~~3~~4: DOE Order 5480.20A, *Personnel Selection, Qualification, and Training Requirements for DOE Nuclear Facilities,* requires a training program be based on a systematic analysis of the job to be performed. Contrary to this requirement, no job task analysis has been performed to determine the training needs for personnel performing calibration of radiological instrumentation and equipment at Tank Farms. ~~WRPS-PER-2008-0201 was written independently on this subject on January 10, 2009.~~ (WRPS-PER-2009-0153)

Finding 0~~4~~5: TFRCM 761.1 requires results of calibrations performed on instruments and equipment used for monitoring individuals, materials, and areas as required by this Manual shall [835.703(d)] be documented and maintained and shall include frequencies, method, dates, personnel, training and traceability of calibration sources to National Institute of Science and Technology or other acceptable standards [HSD J.6]. Contrary to this requirement, training records for persons responsible for calibrating PCM-2 instruments at the 222-S laboratory were not maintained as required. (WRPS-PER-2009-0154) ~~(Note, Efforts are underway to recover records of training, if successful this becomes a note in the report)~~

5.2 Observations

Observation 01: Data sheets for the calibration of the 2704 HV count room equipment do not include complete identification of M&TE or appropriate tolerances for all data. (WRPS-PER-2009-0155)

Observation 02: The roles and responsibilities for the calibration of radiological control instrumentation in terms of procedure technical content ownership have not been established within the TOC. (WRPS-PER-2009-0156)

Observation 03: The flow down of requirements is not complete to ensure the Radiological Control Organization is notified when out of tolerance values are identified during calibrations. ~~222-S Laboratory procedures 2S18062 and 2S18065 do not contain the criteria to notify the Radiological Control Organization when equipment is found out of tolerance.~~(WRPS-PER-2009-0157)

Observation 04- Records Schedules - Radiation detection instrument calibration records retention codes and retention periods are inconsistently listed in IDMS and RIDS. (WRPS-PER-2009-0144)

Formatted: Font: 12 pt

Formatted: Font: 12 pt

Observation 05- Weaknesses in the implementation of the statement of work for instrumentation services by the calibration services provider (PNNL) were observed in that required actions were not taken and corrective actions to address identified deficiencies were not taken in a timely manner. (WRPS-PER-2009-0158)

5.3 Effectiveness of Previous Corrective Actions

PERs and the associated corrective actions were reviewed to verify that radiological instrumentation issues are being identified and corrected.

Numerous PERs have been written in the past three years dealing with radiological instrumentation. The volume and more specifically the content, especially over the past year, provide ample evidence that personnel are aggressively evaluating the radiological control instrumentation program within Tank Farms.

Improvements in the program were noted, for example an out of tolerance condition found on a radiological instrument by any calibration service provider is, in most cases, reported to the effected Radiological Control Organization and is generally addressed through the PER system. This allowed better tracking of issues relative to air sampler calibration and resulted in significant program improvements.

The number of PERs generated is not in itself a measure of effective program evaluation; the effective resolution of the identified issues is of primary importance.

As discussed in ~~this report specific sections~~this report, -the effectiveness of corrective actions is less than adequate. However as the PER process is currently

undergoing significant revision, issues associated with effectiveness of corrective actions are included in specific sections as independent issues.

5.4 Documentation

A review of HPT records associated with daily source checks of instrumentation found records were of good quality with few instances of write-overs. Those noted were not of sufficient magnitude to require corrective actions. The records reviewed included Base Operations East and Base Operations West.

Data sheets for calibration of equipment were reviewed for count room equipment in the 2704 HV count room, PCM-1Bs, and portable air samplers.

Opportunities for improvement were noted. Examples include:

- Lack of complete identification of maintenance and test equipment (M&TE) on count room data sheets.
- Insufficient space on data sheets (specifically STAPLEX air samplers) for all of the M&TE required to be recorded.
- Lack of identified tolerances on calibration parameters (generally limited to count room equipment).

These issues do not represent a non compliance with requirements but fall more into the human factors category. For example on the STAPLEX air sampler data sheet, the M&TE is often recorded in the comments section because four pieces of M&TE are required, but only two blanks for M&TE are included on the form. If documentation is expected, the means for documenting the data should match the data being recorded. Maintenance management was presented with this issue and indicated the identified issue was being corrected.

In the 2704 HV count room the data sheets are relatively new and as such, have not had the improvements that inevitably come with use. However the lack of tolerances for calibration outcomes leaves no method for the person performing or reviewing the recorded values to determine if the values are appropriate. In other cases the range is included in the procedure but not on the data sheet. M&TE is only identified by asset number on the data sheets.

Observation 01: Data sheets for the calibration of the 2704 HV count room equipment do not include complete identification of M&TE or appropriate tolerances for all data.

5.5 Program Ownership

Interviews with management and staff at the program and project level in engineering, radiological controls, and maintenance consistently identified the

lack of clearly defined technical responsibilities as a barrier to the efficient management of instrument programs and resolution of issues.

Within tank farms the radiological instrumentation subject matter expert resides in the Radiological Control Organization and is qualified as a Tank Farms Company/Facility Technical Authority for Fixed/Portable Instrumentation, course number 356405.

The tank farms system for maintenance does not specifically address the role of the radiological technical expert or the role of tank farms as a calibration services provider for radiological instrumentation. The current process drives the decision making process for calibration and associated data sheets to the Engineering Organization via TFC-ENG-FACSUP-C-23, Equipment Identification and Data Management, which states:

> *The responsible engineer provides technical support for preparation approval and changes to maintenance procedures, PM Ids, and calibration work instructions and ensures accuracy of technical aspects associated with PM Ids.*

Radiological instrumentation is a critical element of the Radiological Control Safety Management program credited in the Documented Safety Analysis and described in section 7.8, and as such should have a defined structure where the control and use of radiological instrumentation intersects with the role of the TOC as a calibration services provider for that instrumentation.

TFC –PLN-29, *Maintenance Implementation Plan*, does not address this issue relative to -radiological instrumentation.

These issues have manifested themselves in the day to day operations:

- Unclear approval authorities for maintenance procedures and data sheets.
- Impaired resolution of calibration issues.
- Project initiated modification of area radiation monitors made without radiological control program approval requiring rework by PNNL. The modifications jeopardized the environmental conditions approval for the use of the instrument.
- Lack of technical guidance on volume measurement of air samplers used in temperature extremes field.

This lack of clearly defined roles and responsibilities has been identified using the PER system (CH2M-PER-2008-0380) but has gone unresolved.

As no clearly defined regulatory requirements exist to have a cohesive program ownership, therefore this issue is not a requirements based issue but rather a business management issue and is represented in the Observation 02: The roles and responsibilities for radiological control instrumentation in terms of the TOC

role as calibration services provider for instrumentation used to fulfill the program requirements of a Safety Management Program should be evaluated and defined.

5.6 Verification of the Effectiveness of Training

The *Tank Farms Radiological Control Manual* (TFRCM), HNF 5183, requires in 613.7, a verification of the effectiveness of training. This feature is included in the Triennial Assessment process. During the assessment four HPTs were observed performing work covered under course number 022522, *Operate the Portable Alpha Meter (PAM)*, and 022521, *Operate the Eberline E-140 (GM)*.

No exceptions to training were noted in the performance of the tasks. The specific tasks observed were for the following skill objectives:

- P 022522.S.03 Given a PAM, perform a daily source check in accordance with procedures.
- 022522.S.04 Document removing a PAM from service.
- P 022521.S.03 Given an E-140, perform a daily source check in accordance with procedures.

No performance deficiencies by HPTs were noted during the assessment. The HPTs observed were from Base Operations and Retrieval and Closure Operations.

5.7 Extent of Condition for CH2M-PER-2008-1529

This assessment was used to document the extent of calibration issues associated with **CH2M-PER-2008-1529.**

Critical elements in this PER were:

- M&TE Equipment
- Record Quality
- Consistency of Calibration Frequency
- Lack of a Calibration "Program" as recommended in DOE G 441.1-1C and NCSL RP-1, Establishment and Adjustment of Calibration Intervals.

5.7.1 M&TE Equipment

Energy Northwest Standards Laboratory reports for five pieces of M&TE were reviewed, of the five only one issue was noted. The RadeCo Flow meter, asset Number 817-28-03-019 was calibrated to ±5%. The flow meter is used to calibrate RadeCo flow meters to ±15%. This accuracy is not sufficient to achieve a ±15% during calibration. The maintenance organization was contacted and noted that this issue had been self identified and a different standard with a flow meter with ±1% accuracy is being used to calibrate RadeCo air samplers. A

review of data sheets verified that the use of the standard with the tighter accuracies on RadeCo air samplers calibrated in August of 2008.

The procedure governing calibration of the RadeCo air samplers, 6-RM-719, was reviewed and it has not been modified, but still calls out the use of the RadeCo flow meter:

> *Flow calibrator - RadeCo Model C-828 (0-8 CFM) or equivalent*

222-S procedure, 2S18065: Air Grab Samplers, was evaluated and contains similar language.

This reflects a potential noncompliance with the TFRCM Article 555.3 which states:

> ANSI N42.17B indicates that air flow meters… …and other devices used to determine volumetric flow rates of air sampler and monitors should be calibrated within ±15% of the true reading.

ANSI N42.17B clarifies these criteria in section 9.1.2, Test, by stating:

> 9. Air Circuit Criteria
>
> 9.1 Flow or Flow rate Meter Accuracy
>
> 9.1.1 Requirements
>
> Air flow rate meters shall be accurate to within ±15% of the conventionally true flow rate values.
>
> 9.1.2 Test
>
> A volumetric measuring device or flowmeter, standardized under the measuring conditions and having ~~an accuracy~~accuracy better than 2%, shall be used in this test.

The flow rate meter currently identified in tank farm procedures is the RadeCo flow meter with an accuracy of ±5%. The accuracy is listed on the Energy Northwest Standards Laboratory Calibration Report for the Model C-828 RadeCo Flow meter, asset number 817-28-03-019, as ±5%.

This results in Finding 01, TFRCM 555.5 states that ANSI N42.17B indicates air flow meters, differential pressure indicators, and other devices used to determine volumetric flow rates of air samplers and monitors should be calibrated to within ±15% of the true reading. ANSI N42.17B requires that a flow meter with an accuracy of ±2% be used to perform this calibration. Contrary to these requirements air sampling procedures in use at tank farms allow the use of flow meters with a calibration accuracy of ±5%.

The Base Operations West Maintenance Manager determined that a flow meter with better accuracy should be used and implemented the use of a different flow meter. This reflects an awareness of the criteria and actions taken to address the

issue. However, as the procedures governing the process were not changed, the finding reflects a current deficient condition.

During interviews the Base Operations West Maintenance Manager indicated he had communicated the issue to the previous Radiological Control Director who determined it was not an issue. Additionally the Company Technical Authority noted the same issue in CH2M-PER-2008-1544 but corrective actions were not effective.

5.7.2 Record Quality

Record quality issues were noted, but were relatively minor. While better attention to record quality is needed, the issues noted do not rise to the level requiring formal corrective action. This was communicated to effected management during the assessment.

Improving the match between the data sheets and the work being performed presents a better opportunity to improve the process and is discussed in Observation 01.

5.7.3 ~~Lack of a~~ Calibration Program as recommended in DOE G 441.1-1C

DOE G 441.1-1C, *Radiation Protection Programs Guide for Use with Title 10, Code of Federal Regulations, Part 835, Occupational Radiation Protection*, defines the essential elements of an acceptable portable instrument calibration program:

- A system that ensures calibration shall be performed periodically on each instrument [10 CFR 835.401(b)(1)]. ANSI N323A (4.9) recommends that calibration be performed at least annually.

  Review: This is currently met by the existing calibration program at TOC. All instruments reviewed were calibrated on at least an annual basis.

- An internal audit program shall be conducted no less frequently than every 36 months (10 CFR 835.102).

  Review: This is met by the current Triennial Assessment Program

- A records program shall be established that documents results of maintenance and calibration performed on instruments and equipment used for area monitoring and contamination control [10 CFR 835.703(d)], includes the maintenance of training records [10 CFR 835.704(a)], documents changes in equipment, techniques, and procedures used for monitoring, [10 CFR 835.704(e)], and documents the results of internal audits [10 CFR 835.704(c)].

Review: Without assessing each program element the quality of the implementation of each sub element cannot be determined, but in each sub element, the TOC has a records program in place to accomplish the defined element. Two findings in this report discuss training related issues. CH2M-PER-2008-1560 identifies training issues but corrective actions were not initiated.

Further, the following elements should be in place for those activities that perform their own instrument calibrations:

- Procedures addressing the calibration of reference sources, support instruments, and field instruments;

  Review: *Control And Calibration Of Measuring And Test Equipment,* TFC-OPS-MAINT-C-07, provides for the calibration of MT&E. Other categories of equipment such as PCM-1Bs, count room equipment, and air samplers are all covered by calibration procedures.

- A method to determine when instruments have been returned out-of-calibration and a method to notify users of out-of-calibration instruments;

  Review: Procedures were reviewed and as found readings are taken that allow determination that a piece of equipment is found out of tolerance. Procedures were reviewed for calibration of equipment. The procedures used to calibrate equipment at the 222-S labs were found to not have this specifically identified for two of the following procedures:

  2S18049: *Eberline Personnel Contamination Monitor Model PCM-2* Yes
  2S18052: *Eberline HFM-6 Hand and Foot Monitor* Yes
  2S18058: *Eberline Beta Air Monitor, Models AMS-3, AMS-3A, AMS-3A-1, and 700300* Yes
  2S18060: *Eberline Personnel Contamination Monitor, Model PCM-1B* Yes
  2S18062: *Eberline Radiation Monitor(s) Models HFM-6, PCM-1B and PCM-2 Cleaning, Inspection and Replaced Detector Efficiencies* No
  2S18065: *Air Grab Samplers* No

The issues of notifying radiological controls when an instrument fails a calibration or functional check has been previously documented on PERs CH2M-PER-2006-2015 and PER-2005-4261, but the effectiveness of corrective actions have been less than adequate. This is also an observation in the current report, Observation 03, discussed in more detail later in the report.

5.8 Training

A review of training records indicate that Health Physics personnel operating radiological monitoring equipment have well documented training, ~~however the~~however the training content for the use of portable instruments and air samplers is not comprehensive in that it does not address volume adjustments necessary for temperature extremes.

Within the HPT certification program, courses 022004 and 0220T4, learning objective 2.18.03 states: Identify the physical and operating characteristics and the limitation of high volume (>2cfm) portable air samplers. The course material is lacking the discussion of limitation which can effect the measurement of the volume in the field. For tank farms the most significant is the effects of temperature. ~~NuReg 1400~~NUREG 1400 provides guidance on temperature correction. Using the guidance contained in ~~NuReg 1400~~NUREG 1400, section 5.5, Pressure and Temperature, if the temperature varies by enough to cause the measured volume to vary by more than five % then the temperature should be corrected for. Using an example of an air sampler calibrated at 72 °F, more than a 26°F increase or decrease in temperature would require the air sample volume to be adjusted. As the temperatures are often below 46°F or above 98°F, the training of technicians is less than adequate on the subject of limitations associated with air samplers. Information of this type is provided for radiation and contamination survey instrumentation. NUREG 1400 is applicable as it is listed as a standard in TFC-0504-FCDMP-018, Workplace Air Monitoring Standards. FCDMP-018 defines the standards and methods used to manage a compliant work place air monitoring program.

This issue is included in Finding 02: TFRCM 555.5 states: Calibrations should be performed annually at the atmospheric pressure and temperature conditions that are expected during sampling conditions, **or the appropriate correction factor should be applied during the calculation of the flow rate** (bold added for emphasis). ~~NuReg 1400~~NUREG 1400, section 5.5, Pressure and Temperature, states that if the temperature varies by enough to cause the measured volume to vary by more than 5% then the temperature should be corrected for. Additionally, TFRCM Article 562 states: The effects of environmental conditions, including interfering radiation, on an instrument shall [835.401(b)(3)] be known prior to use Contrary to these requirements, the effect of temperature on the sampled volume for air samplers is not accounted for and the methods for doing so are not addressed in training, technical basis documents, or procedures for work place air sampling.

5.9 Electronic Calibration Records and Record Schedules

PER-2005-4260 from the 2005 RadCon Triennial assessment on this topic identified:

The assessment pointed out the retention period requirements for Radiological Control was 75 years and the work packages for calibrating this equipment were listed on the RIDS inventory for three years. The work packages for Radiological equipment are listed on the RIDS under an inappropriate Administrative schedule which specifies three year retention. The actual requirements (see attachment) are direct excerpts from the DOE Records Schedules that clearly show these records should be listed as 75 year retention under the appropriate schedule.

A review of this past finding identifies major improvements have been made to calibration records and all CHAMPS work order records. Currently, work orders in CHAMPS that have been closed for longer than 30 days are sent to IDMS for electronic records retention. This began in roughly September 2006. Before then, closed work orders were physically sent to Seattle for records retention.

The transition from physical records to IDMS electronic records aids in efficiency and functionality as was demonstrated when Work Control personnel were able to assist this assessment with the retrieval of electronic records (completed RadCon calibration data sheets) without the need to hunt through physical paper records or retrieve records from off-site.

Review of the IDMS information for these records identifies the code ENV 1.d.8a was selected with a 75 year retention period.

Review of the RIDs information for these records indicates a code of ADM-17.32a, with a retention period of "Retain until the item is removed from service."

Thus, the electronic records are safely stored in IDMS, however, IDMS and RIDS specify different retention codes and retention periods. The Records and Document Control Manager and Records Management Specialist are aware of this discrepancy and plan to correct the retention code and retention period during the 2009 RIDs campaign.

Observation 04, Records Schedules - Radiation detection instrument calibration records retention codes and retention periods are inconsistently listed in IDMS and RIDS.

5.10 Calibration Data Sheets

Review of calibration data sheets indicate several notes were made that RadCon engineering was notified if equipment was found "out of tolerance." In addition, there is one note in the reviewed calibration data sheets indicating that a calibration frequency was shortened due to items being found out of calibration.

Despite this positive observation, the flow down of requirements does not appear to be complete in this area.

TFRCM, Article 562, -Inspection, Calibration and Performance Tests, item 8, requires the following:

> *The Radiological Control Organization shall evaluate the potential radiological consequences and document any corrections to the original monitoring results upon determination of the use of an out-of-calibration or failed radiation measurement instrument [HSD H.4]. The Radiological Control Organization should review surveys performed with the instrument while it was out of calibration.*

TFC-ESHQ-RP_INS-P-05, *Radiation Protection Instrument Program,* states the following:

Applicable Project Instrumentation Facility Point of Contact	1.	Document and maintain evaluations of potential radiological consequences associated with the use of an out-of calibration or out-of tolerance radiation measurement instrument: (7.1.2.a) NOTE: The Project radiological control organization receives notification of as-found out of tolerance instruments from the calibration service provider.

TFC-OPS-MAINT-C-01, REV N-6, *Tank Farm Contractor Work Control* aids in accomplishing this requirement:

> 4.8.1.5.b Ensure data is within tolerances listed in the procedure or in the work instruction steps. Notify the senior shift manager if data is outside of the tolerances.

However, there is no driver for the senior shift manager to then notify the *Radiological Control Organization* so they may evaluate the situation. The flow down of the requirement appears to stop here.

The line item in the work order paperwork that asks if Radiological Engineering was notified of OOT conditions is helpful, but it's not a procedurally flowed down requirement.

This is a repeat item from the 2005 Triennial (captured in PER-2005-4261) on this topic, page 4, bullet 3 of the report which stated:

> TFC-ESHQ-RP_INS-P-05 specifies Radiological Control to be notified when out of tolerance values are identified during pre-calibration and calibration tests. There are no notification requirements to Radiological Control in TFC-OPS-MAINT-C-01. The notification is important to ensure personnel are being appropriately monitored;

Observation 03: The flow down of requirements through TFC-OPS-MAINT-C-01_is not complete to ensure Radiological Control is notified when out of tolerance values are identified during calibrations. 222-S Laboratory procedures 2S18062 and 2S18065 do not contain the criteria to notify Radiological Controls when equipment is found out of tolerance.

5.11 Subcontractor Oversight

PER-2005-4263 from the previous triennial assessment on this topic was issued as a PIE/CIM and questioned the lack of a subcontractor oversight plan. The PER states,

> *Observation RP-O-03 states, The decision to not develop a contractor QA oversight plan for Pacific Northwest National Laboratory needs to be reevaluated given the level of risk associated with provided services and the company decision to no longer participate in multi-contractor assessments.*

The PER was answered with the following:

> *The subcontractor oversight process is to be revised based on a new process approved by the ERSB. The use of oversight plans will be strengthened and under the cognizance of line management. See attached files describing the new process*

This statement that the process is to be revised did not reevaluate the need for an oversight plan. ~~Three years later, the situation is the same.~~
During the assessment the performance of the RadCon Program office relative to subcontractor oversight was evaluated using the following criteria:

TFC-BSM-CP_CPR-C-05, *Procurement of Services* states,

> *Working with Project Management, ES&H, and Quality Assurance, develop subcontractor oversight plans in accordance with TFC-ESHQ-S_SAF-C-07. (7.1.4)*

TFC-ESHQ-S_SAF-C-07, *Subcontractor Oversight* states,

> *4.2.1 Complete the Subcontractor Oversight Plan (A-6003-991) screening Section I to determine if a subcontractor oversight plan is required.*

Interviews with the BTR for the PNNL SOW indicates no subcontractor oversight was in place ~~plan has been developed~~ and form A-6003-991 was not completed to determine if it is needed. The required form was developed during the assessment. Because of this, the issue is noted but does not require corrective actions and is not shown as an observation or finding.

~~This is documented in Finding 03: TFC-ESHQ-S-SAF-C-07, *Subcontractor Oversight*, requires that contracts be screened to determine the need for subcontractor oversight plans. Contrary to this requirement, no screening was performed for contract and release number 36437-18, *Instrumentation and Radioactive Source Calibration Services*.~~

Pacific Northwest National Laboratory performance under the statement of work was evaluated. Records were requested from PNNL relative to three items:

- Second quarter of 2008 Out of Tolerance Reports
- Documentation of completion of the following SOW action
  PNNL will perform an annual evaluation of instrument as-found out-of-tolerance (OOT) performance, and identify instruments where more than fifteen (15) percent of the average in-service population exceeds this threshold. Included in this review will be instruments that have repeated OOTs for consideration of retirement from the program.
- Evidence of correction actions associated with:
  - Reported cases of bench monitor alpha probes not meeting the required minimum efficiency
  - Purchase of equipment with fraudulent NRTL labeling.

The second quarter out of tolerance reports were provided as required.

The SOW action had not been completed. Interviews with the responsible manager indicated the activity was not performed.

No corrective action was taken relative to the bench monitor alpha probe efficiency based on the initial report from the TOC. However, during the assessment the issue was corrected. The failure to initiate corrective actions when the issue was identified reflects a potential weakness in the corrective action system required by 10 CFR 830.122.

For the purchase of equipment with fraudulent NRTL labeling, PNNL provided the results of an extensive evaluation with effective actions taken.

The general performance of PNNL relative to the criteria contained in the SOW was not evaluated beyond those areas identified. All specific issues identified were corrected by PNNL management during the assessment.

The conditions result in Observation 05- Weaknesses in the implementation of the statement of work for instrumentation services by the calibration services provider (PNNL) were observed in that required actions were not taken and corrective actions to address identified deficiencies were not taken in a timely manner.

The subcontractor oversight plan developed by the Radiological Control Program office addresses these issues. Because the implementation of the subcontractor oversight plan is pending, this issue is included as an observation.

5.12 PERs written on Out-of Tolerance Air Samplers

TFC-ESHQ-RP_INS-P-05, *Radiation Protection Instrument Program*, requires out of tolerance reports be evaluated by radiological controls. This process, for air samplers, is initiated by the work order form for calibrations of air samplers, which states:

> *Radcon Engineering notified of any out-of-tolerance value.*
> *yes ___ No ___ N/A ___*

A review of the calibration data sheets identified that out-of-tolerance was checked "yes" numerous times.

A sample of "out-of-tolerance" conditions were reviewed to see if PERs were written and if analysis was performed to determine the effect this condition had on previous instrument readings. For example, an air sampler may have collected other than the anticipated amount of air/radioactive particulates and could have mis-estimated the actual airborne radioactive concentration present at the sample location.

Of eight out-of-tolerance conditions reviewed, seven had PERs written and analysis performed.

WFO-WO-08-0737, Radeco Air Sampler, Serial # unreadable, identifier # 272AS005:CH2M-PER-2008-0649 was written and it contains analysis.

WFO-WO-08-0739, Radeco Air Sampler, Serial # 8497, identifier # 272AS012: No PER was located. Upon notification that no PER had been initiated, Base Operations RadCon wrote WRPS-PER-2009-0011.

WFO-WO-08-0740, RadeCo Air Sampler, Serial # 8923: CH2M-PER-2008-0652 was written and it contains analysis.

WFO-WO-08-0747, Air Sampler, Serial # 8970: CH2M-PER-2008-0650 was written and it contains analysis.

WFO-WO-08-1276, Air Sampler, Serial # 8927: CH2M-PER-2008-0653 was written and it contains analysis.

WFO-WO-08-1278, Air Sampler, Serial # 8956: WRPS-PER-2008-0089 was written and it contains analysis.

TFC-WO-08-1268, Air Sampler, Serial # 8122: WRPS-PER-2008-0092 was written and it contains analysis.

TFC-WO-08-1273, Air Sampler, Serial # unreadable, identifier # 272AS005: WRPS-PER-2008-0090 was written and it contains analysis.

The single air sample lacking a PER was in Base Operations East. The process and practice is in place to perform and effective evaluation. This single instance was not considered an instance requiring additional corrective action.

5.13 Training

With the exceptions noted in the previous sections of the report relative to temperature controls for determining air sample volumes, the training of Health Physics technicians for the use of instrumentation is complete, well documented, and implemented as provided.

As a calibration service provider the training of the crafts involved in the calibration of radiological instrumentation was reviewed. The criteria fall into two categories completion of training and training records.

TFRCM, Part 6, Instrumentation and Calibration Records, Article 761, Calibration and Operational Checks, item 1 states:

> *Results of calibrations performed on instruments and equipment used for monitoring individuals, materials and areas as required by this Manual shall(835.703(d) be documented and maintained and shall include frequencies, method, dates, personnel, training and traceability of calibrations sources to National Institute of Science and Technology or other acceptable standards (HSD J.6)[RPP #183}*

The applicable 10CFR 835 is the source for the requirements to maintain the records:

> *835.703 Other Monitoring Records*
> *(d) Results of maintenance and calibration performed on instruments and equipment as required by § 835.401(b).*

The TFRCM provides the content requirement for the records that includes training, as noted in 761.1, listed above.

Queries of maintenance and training staff as well as queries of individual training records of instrument technicians showed no record of training provided relative to calibration of radiological instrumentation. At the 222-S laboratory, vender training was provided to instrument technicians for the implementation of the

PCM-2 monitors. However, the records were maintained in the workers field files as opposed to being made part of the training records. As a result, records were not maintained for training as required by the TFRCM article 761.1. Finding 04~~5~~: TFRCM 761.1 requires results of calibrations performed on instruments and equipment used for monitoring individuals, materials, and areas as required by this Manual shall [835.703(d)] be documented and maintained and shall include frequencies, method, dates, personnel, training and traceability of calibration sources to National Institute of Science and Technology or other acceptable standards [HSD J.6]. Contrary to this requirement, training records for persons responsible for calibrating PCM-2 instruments was not maintained as required.

The requirement to perform training is driven by multiple documents:

DOE O 433.1, *Maintenance Management Program for DOE Nuclear Facilities,* states:

> *Training and Qualification of Maintenance Personnel. A maintenance training and qualification program must be implemented to develop and maintain the knowledge and skills needed by maintenance personnel to effectively perform maintenance activities. [See DOE 5480.20A; DOE O 414.1A; DOE G 433.1-1, Section 4.2; DOE-HDBK-1206-98; DOE-HDBK-1003-96; 10 CFR 830.122(b); and DOE G 450.4-1B, ISMS Principle 3.]*

At WRPS this is implemented by TFC-PLN-29, *Maintenance Implementation Plan*, Section 2.0, Maintenance Implementation Process, section 4, states;

> *b. A maintenance training and qualification program is implemented to develop and maintain the knowledge and skills needed by maintenance personnel to effectively perform maintenance activities.*
>
> *c. The maintenance managers and first line managers are directly involved in training maintenance personnel. This involvement, as a minimum, includes close coordination with the TFC training organization to establish and maintain course content and emphasis, determine and support training schedules, accomplish on-the-job training (OJT), and provide feedback to adjust course content and emphasis as necessary.*

Other relevant guidance includes DOE 5480.20A, which states in section 5, Qualification Process Requirements, item c:

> *Technician and maintenance personnel qualification shall include demonstrated performance capabilities (performance demonstrations) to ascertain their ability to adequately perform assigned tasks. Written examinations should also be administered to personnel in these positions. However, a comprehensive final examination need not be administered to ascertain formal qualification of technicians and maintenance personnel*

(with the exception of radiological control technicians, who shall comply with the requirements of the DOE Radiological Control Manual). Participation in continuing training programs is required to maintain and improve their abilities to continue to function safely in the operating organization. The requirements that are described in Chapter I, paragraph 7d, shall be implemented to the extent to which they apply to the position. Their continued satisfactory performance of assigned duties and their satisfactory participation in the continuing training program (classroom, OJT, laboratory, etc.) serves as sufficient evidence of maintenance of their qualification.

Numerous other references discuss the need for training. The best summary of the issue can be found in Life-Cycle Training Requirements for DOE Nuclear Facilities DOE Order 5480.20A which states:

DOE 5480.20A requires that a systematic approach to training (SAT) be used to establish training programs for operating organization personnel. Procedures that govern SAT processes are generic and may be obtained from other facilities in DOE and be used with minor modifications. DOE-HDBK-1078-94, Training Program Handbook: A Systematic Approach to Training, contains guidance for systematically establishing training programs. DOE-HDBK-1074-95,Alternative Systematic Approaches to Training, offers other approaches and methods that have proven useful for establishing training programs. Regardless of the approach taken, analysis of the job is required to determine the necessary training. If the job changes due to mission or operational phase changes, further analysis is necessary to determine if more or less training is appropriate.

In the past three years the role of the TOC as a calibration services provider has expanded. The best example of this is the 2704 HV count room which contains two gamma spectroscopy units, one alpha spectroscopy unit, one alpha beta proportional counter and a liquid scintillation counter. No unique training is required to perform calibrations on this equipment. When installed, a single instrument technician followed the process and was involved in establishing the calibration procedures and the data sheets. The knowledge level of the technician is good. However there was no application of the systematic approach to training to determine if training for him, or other instrument technicians is needed for this equipment.

The method for performing needs analysis is covered in TFC-BSM-TQ_ADD-C-01 *Training Analysis, Design, And Development.* None of the personnel interviewed indicated this process had been applied to determine if the task of performing calibrations of radiological instrumentation and equipment required training. This results ~~in Finding~~in Finding 034: DOE Order 5480.20A, *Personnel Selection, Qualification, and Training Requirements for DOE Nuclear Facilities,* requires a training program be based on a systematic analysis of the job

Formatted: Font: Not Bold

Formatted: Font: Not Bold

to be performed. Contrary to this requirement, no job task analysis has been performed to determine the training needs for personnel performing calibration of radiological instrumentation and equipment at Tank Farms.

6.0 Assessment Conclusions

The assessment evaluated compliance to the requirements of HNF-MP-5184, *CH2M HILL Hanford Group, Inc. Radiation Protection Program* (RPP) relating to referenced portions of 10 CFR 835 as implemented by company program and procedures. The assessment determined that the company's program and procedure implementation are sufficient to demonstrate compliance with 10 CFR 835, with the exceptions noted.

7.0 ~~Personnel Contacted~~PERSONNEL CONTACTED

Name	Organization	Contacted	Entrance	Exit
Berman, H. S.	Engineering	X		
Bickel, E. E.	Base Operations Radiological Controls	X		
Cato, D. M.	Systems Engineering and Integration Support	X		
Hudspeth, E.R.	Base Operations Maintenance	X		
Rolph, J. T.	Radiological Controls	X	-	X
Hasty, B. A.	Information Resources	X		
Murphy, M. K.	PNNL	X		X
Almeida, T. L.	PNNL			X
Haggerty, B. A.	Base Operations Maintenance	X		
Hanni, J. B.	Radiological Controls	X		
Duffy, W. L.	SST Retrieval and Closure Radiological Controls	X		
Aldridge, G. E.	Base Operations Maintenance	X		
Jones, R. W.	Base Operations Maintenance	X		
Heinemann, J. L.	222-S Laboratory Maintenance	X		
O'Nieill, P. M.	222-S Laboratory Maintenance	X		
Bishop, W. W.	Base Operations Radiological Controls	X		
Huddleston, L. B.	Base Operations Radiological Controls	X		
Toon, J. M.	Base Operations Radiological Controls	X		
Meyer, K. L.	Base Operations Radiological Controls	X		
Young, M. H.	SST Retrieval and Closure Radiological Controls	X		
Seely, K. R.	SST Retrieval and Closure Radiological Controls	X		
Vacca, J. E.	Information Resources	X		
Klein, R. J.	SST Retrieval and Closure Radiological Controls	X		
Dupaquier, J. C.	Base Operations Radiological Controls	X	X	
Jansons, R. S.	Office of River Protection		X	
Tucker, R. P.	Base Operations Maintenance	X	X	

Formatted Table

Formatted Table

8.0 ~~Documents Reviewed~~DOCUMENTS REVEIWED

1. HNF-MP-5184, *CH2M HILL Hanford Group, Inc. Radiation Protection Program*
2. HNF-5183, *Tank Farms Radiological Control Manual (TFRCM)*
3. DOEG441.1-1B, *Radiation Protection Programs Guide*
4. DOE O 433.1, *Maintenance Management Program for DOE Nuclear Facilities*
5. *DOE-HDBK-1118-99, October 1999, Guide to Good Practices for Continuing Training*
6. DOE 5480.20A *Personnel Selection, Qualification, and Training Requirements for DOE Nuclear facilities*
7. DOE G 441.1-1C, *Radiation Protection Programs Guide for Use with Title 10, Code of Federal Regulations, Part 835, Occupational Radiation Protection*
8. TFC-ESHQ-RP_INS-P-05, *Radiation Protection Instrument Program*
9. TFC-OPS-MAINT-C-01, REV N-6, *Tank Farm Contractor Work Control*
10. TFC-BSM-CP_CPR-C-05, *Procurement of Services*
11. TFC-ESHQ-S_SAF-C-07, *Subcontractor Oversight*
12. TFC-OPS-MAINT-C-07, *Control And Calibration Of Measuring And Test Equipment*
13. TFC-BSM-TQ_ADD-C-01 *Training Analysis, Design, And Development*
14. TFC –PLN-29, *Maintenance Implementation Plan*
15. TFC-PLN-61, REV A-7, *Tank Operations Contractor Training And Qualification Plan*
16. Statement of Work, contract and release number 36437-18, *Instrumentation and Radioactive Source Calibration Services*
17. WRPS-PER-2008-0201
18. CH2M-PER-2008-0380
19. CH2M-PER-2008-1544
20. CH2M-PER-2006-2015
21. CH2M-PER-2005-4261
22. CH2M-PER-2005-4260
23. CH2M-PER-2005-4263
24. CH2M-PER-2008-0649
25. WRPS-PER-2009-0011
26. CH2M-PER-2008-0652
27. CH2M-PER-2008-0650
28. CH2M-PER-2008-0653
29. WRPS-PER-2008-0089
30. WRPS-PER-2008-0092
31. WRPS-PER-2008-0090
32. TFC-ENG-FACSUP-C-23, Equipment Identification and Data Management,
33. 2S18049: *Eberline Personnel Contamination Monitor Model PCM-2*
34. 2S18052: *Eberline HFM-6 Hand and Foot Monitor*
35. 2S18058: *Eberline Beta Air Monitor, Models AMS-3, AMS-3A, AMS-3A-1, and 700300*
36. 2S18060: *Eberline Personnel Contamination Monitor, Model PCM-1B*

Formatted: Bullets and Numbering

37. 2S18062: *Eberline Radiation Monitor(s) Models HFM-6, PCM-1B and PCM-2 Cleaning, Inspection and Replaced Detector Efficiencies*
38. 2S18065: *Air Grab Samplers*
39. A-6003-991- *Complete the Subcontractor Oversight Plan*

Approval

Formatted: Left

Bob Brown
~~1.~~ Team Leader _____ Signature on File _____ Date ___1/26/09_ ~~HNF-MP-5184, *CH2M HILL Hanford Group, Inc. Radiation Protection Program*~~
~~2.HNF-5183, *Tank Farms Radiological Control Manual (TFRCM)*~~
~~3.DOEG441.1-1B, *Radiation Protection Programs Guide*~~
~~4.TFC-ESHQ-RP_INS-P-05, *Radiation Protection Instrument Program,*~~
~~5.TFC-OPS-MAINT-C-01, REV N-6, *Tank Farm Contractor Work Control*~~
~~6.TFC-BSM-CP_CPR-C-05, *Procurement of Services*~~
~~7.TFC-ESHQ-S_SAF-C-07, *Subcontractor Oversight*~~
~~8.TFC-PLN-61, REV A-7, *Tank Operations Contractor Training And Qualification Plan*~~
~~9.5480.20A *Personnel Selection, Qualification, and Training Requirements for DOE Nuclear facilities*~~
~~10.DOE-HDBK-1118-99, *October 1999, Guide to Good Practices for Continuing Training*~~

Formatted: Bullets and Numbering

Formatted: Underline

Formatted: Left

Tino Maciuca
Team Leader
Manager _____ Signature on File _____ Date ___1/26/09_

Attachment A

Assessment Plan

Specialty Assessment FY2009-ESHQ-S-0327,

Triennial Assessment Program,

10 CFR 835.401(b)

Purpose

The purpose of this assessment is to assess compliance to the requirements of HNF-MP-5184, *CH2M HILL Hanford Group, Inc. Radiation Protection Program* (RPP) relating the referenced portions of 10 CFR 835 as implemented by procedures, programs, and plans.

Scope

This assessment will include evaluations at Base Operations, Retrieval & Closure Operation, and program functions.

Pacific Northwest National Lab support functions done in accordance with Requisition # 36437-18 revision 6a, *Instrumentation and Radioactive Source Calibration Services*, will be included in the assessment.

The Integrated Management Safety System (ISMS) levels for this assessment include both company and facility levels.

Assessment Team

Bob Brown will be the team lead for the assessment with support from Lee Penick. Bob Brown and Lee Penick have completed Course # 350322 - Assessment Techniques. Bob Brown has completed Course # 350319 - Management Assessment Team Leader

Assessment Schedule

The assessment is planned to be conducted between December 17, 2008 and January 15, according to the following schedule:

- Entry Meeting- December 17, 2008.
- Field Work- December 17, 2008 to December 30, 2008.
- Exit Meeting-January 5, 2009
- Draft Report- January 7, 2009
- Final Report- January 15, 2009

Performance objectives and criteria, including source information used to perform the assessment, and implementing documents and checklists developed

The objectives of this assessment are to:

- Assess compliance with and implementation of 10 CFR 835.401(b) and HNF-MP-5184 requirements 76, 77, and 78, as shown in Section VII, Requirements Matrix.
- Follow-up on the effectiveness of corrective actions from previous assessment.
- Perform a limited review of the application of training by personnel.

Implementing documents reviewed:

- HNF-MP-5184, CH2M HILL Hanford Group, Inc. Radiation Protection Program
- HNF-5183, *Tank Farms Radiological Control Manual (TFRCM)*
- DOEG441.1-1B, *Radiation Protection Programs Guide*
- ANSI N323 (1978) – *Radiation Protection Instrumentation Test and Calibration*

Within the context of ISMS, elements applicable to this assessment are as follows:

- Ensuring Competence Commensurate with Responsibilities ISMS Guiding Principle No. 3,
- Hazard Controls Tailored to Work Being Performed, ISMS Guiding Principle No. 6,
- Develop and Implement Hazard Controls, ISMS Core Function No. 3
- Provide Feedback and Continuous Improvement, ISMS Core Function No. 5.

Assessment Approach and Methodology

The assessment will rely on:

- Objective evidence of the implementation of the program through the review of documentation.
- Interviews with personnel involved in development and implementation of instrumentation and calibration.
- Observations of the performance of personnel or documentation of activities, and comparison with the training for the activities.
- Interviews/surveys of managers and employees who oversee or perform work in radiological areas or with radiological materials.

The lines of inquiry are based on *Radiation Protection Lines of Inquiry for Assessing Compliance with 10 CFR 835* as provided on the Office of Health, Safety and Security website http://www.hss.energy.gov/healthsafety/WSHP/radiation/rule.html, and implementing documents noted above.

PER AND ESTARS EXTENSION, TRANSFER AND/OR CHANGE FORM

PER Number: WRPS-PER-2009-0152

ESTARS Sub-Task Number: N/A

Due Date Extension: (●) Yes ( ) No

Revision to PER or CA Plan Content? ( ) Yes (●) No

Transfer Responsible Manager/Actionee? ( ) Yes (●) No

Occurrence Report Related? ( ) Yes (●) No

NOTE: For significant PER's, submit Site Form A-6003-543 to the ESRB Secretary.

NOTE: One Extension Form is required for each PER extension/transfer request. However, one Extension Form may contain several extension requests for ESTARS Sub-Tasks associated with the same PER.

NOTE: Transfers, due date, extensions or changes to PER resolutions and corrective action plans that include commitments/ dates to external agencies (e.g., DOE, ORP, Department of Ecology, Department of Health, etc.) must be coordinated with the external agency prior to submitting this form.

EXTENSION DUE DATE:

Extend Due Date to: 4/27/2009

EXTENSION AUTHORIZATIONS:

First Extension: James Rolph _____ **Date:** 3/11/2009

PER Responsible Manager (Print/Sign)

Second Extension: _____ **Date:** _____

Department Director or Vice President (Print/Sign)

Third Extension: _____ **Date:** _____

Department Vice President (Print/Sign)

TRANSFER RESPONSIBLE MANAGER/ACTIONEE:

NOTE: E-STARS DELEGATION LISTS MUST BE CLOSED BY THE RESPONSIBLE MANAGER/ACTIONEE PRIOR TO IMPLEMENTATION OF THE TRANSFER REQUEST.

Transferred From: Current Owner: _____ _____

(Print/Sign) Date

Transferred To: New Owner: _____ _____

(Print/Sign) Date

CHANGE AND/OR TRANSFER AUTHORIZATION:

_____ _____

Responsible Manager Concurrence (Print/Sign) Date

NOTE: Occurrence report PERs (SC-2, SC-R, SC-1), any text change to a corrective action previously entered in ORPS must be updated ORPS (forward to CH2M OR representative) with Facility Representative approval.

JUSTIFICATION STATEMENT FOR EXTENSION, TRANSFER AND/OR CHANGE REQUEST:

Other WRPS priorities have preventing significant work to take place on this PER in more depth than collecting preliminary information and data. The concern raised in the PER regarding temperature and pressure correction factors was reviewed for impact on the existing air sampling analysis with the conclusion that air sampling in cold weather our total flow would be higher than indicated, thus our air sampling analysis would be conservative. Temperatures greater than 95-98 degrees F may be a different matter, so time exist to extend the due date of this PER since temperatures where correction factors may be warranted are a few months away. Additionally, we ordered in January samples of possible air samplers that we may use to replace the existing inventory that correct for temperature and pressure while in use. The extension is required to adequately address this PER.

Save

Problem Evaluation Request (PER)

WRPS-PER-2009-0222
Closed 04/23/2009 11:15

PER No	Date of Discovery	Time of Discovery (24:00)	Project
WRPS-PER-2009-0222	02/04/2009	08:00	Safety/IH-RC

Location

2704HV

How Was Problem Discovered

General Observation

Description of Concern or Problem

During a periodic review of IH surveys and records, a discrepancy was noticed between the name written on the air sampling field log as the person sampled and the person identified in the database as the person sampled. Consequently the person who received the personal notification was incorrect. There are 2 reviews in the current process that should have caught the mistake.

Requirement Not Satisfied	Source Document Number

Equipment Identification Number	System Identification

Immediate actions Taken or Planned

Communication to the RCO manager describing the error took place, the database was updated by the RCO technician and a revised record was generated by the IH. The person who erroneously received the letter was informed it was a mistake and to disregard the letter, notification to AMH to remove the exposure letter from the incorrect personal medical file, and a letter was created and sent to the appropriate person on 02/10/2009 with a description of why the notification was delayed.

Recommended Corrective actions

Recommend assignment to Markis Hughey as a PIE/CIM. The IH manager needs to reinforce the importantance of quality data input and quality review of the data using the process already in exsistance.

Originator Contact

I would like to review the the corrective actions at closure to ensure they were effective

Originators Name	Originators ID	Originators Phone	Date Initiated
Caldwell, Joyce A	H0008566	(509) 376-0737	02/10/2009

SHIFT OPERATIONS REVIEW

Title

IH records discrepancy

How Discovered	Agency
self-ID prior to event	

Reportability	SSC Operability	Operability Review	Comp Measures Req
Non-Reportable	N/A	N/A	

Describe actions Taken or Recommended

No additional actions taken or recommended by BOSM.

SO Reviewer Name	SO Reviewer ID	SO Reviewer Phone	SO Review Date
Malhan, Rakesh	H0046812	(509) 373-2689	02/10/2009

SCREENING

PER Significance Level	
PIE/CIM	

Independent Assessment Review	Occurrence Report Number	Externally Identified	
No		No	
Assigned Responsible Manager	**Facilities Rep / SSO**	**Safety Management Rep**	

Hughey, Markis T			
Program		**Safety Management Program**	
• N/A		• Industrial Hygiene	
PER Screening Comments			
None.			
Causal Code			
MGT/Comm/Train	**Human Performance**	**GEMS**	**Equip/Eng/Other**
Failed Barrier	**ORPS Code**	**Functional Area**	**Work Process**
	Not Applicable	Occupational Safety and Health	• IH Program
ISMS	**Consequence Code**		
Provide feedback and continuous improvement	• Records - Errors or incomplete data recording, checklists		
PER Screening Chair	**PER Screening Chair ID**	**PER Screening Chair Phone**	**PER Screening Date**
Owen, Annette	H0054042	(509) 372-0533	02/11/2009
PAAA REVIEW			
PAAA Screening	**PAAA Codes**	**Function Codes**	
PAAA, Non-NTS Reportable	• 10 CFR 830.122 (d)(2) • 10 CFR 851.20 (b)(4)	• Industrial Hygiene	
NTS Report Number	**NTS Report Date**		
Repetitive / Recurrent	**Programmatic**	**Intentional Violation / Misrepresentation**	
No	No	No	
PAAA Screening Comments			
PAAA Reviewer Name	**PAAA Review Date**		
Anderson, Craig E	02/11/2009		
PAAA Approver Name	**PAAA Approve Date**		
Anderson, Craig E	02/12/2009		
SENIOR MANAGEMENT REVIEW/CONCURRENCE			
TF Operations Morning Leadership Call			
TF Operations Morning Leadership Call is no longer required			
Instructions for Responsible Manager			
Evaluate suggestion, enter comments and required actions on PIE/CIM tab of the PER. Disposition in accordance with TFC-ESHQ-Q_C-C-01, Problem Evaluation Request.			
Senior Management	**Sr Mgmt ID**	**Sr Mgmt Phone**	**Sr Mgmt Review Date**
Owen, Annette	H0054042	(509) 372-0533	02/12/2009
CAUSE ANALYSIS			
Description of Occurrence			
Extent of Condition			
Safety Significance			
Generic Implications			

Remedial Corrective Action
Causal Analysis, Apparent Cause and/or Root Cause Analysis
PIE/CIM
Evaluation of PIE/CIM Initiative
Management expectations regarding quality data input and review were reiterated in an interoffice memorandum (WRPS-0900486, attached) issued April 6, 2009.
ATTACHMENTS
Link to PER
WRPS-0900486_-_[0904080330] Mgt Expectations.pdf
WRPS-PER-2009-0222.OriginatorResponse..pdf

AUDIT HISTORY

Change Date	Auditor	Comments
02/11/2009 07:39	Anderson, Craig E	PAAA Codes Changed
02/12/2009 09:07	Owen, Annette	Responsible Manager Task Launched by Owen, Annette

-- End of Report --
04/23/2009 11:15 AM

Task# WRPS-PER-2009-0222			
E-STARS[R] Report Task Detail Report 04/23/2009 1115			
TASK INFORMATION			
Task#	WRPS-PER-2009-0222		
Subject	PIE; IH records discrepancy		
Parent Task#		Status	CLOSED 04/23/2009
Reference		Due	04/11/2009
Originator	^PER Coordinator	Priority	Medium
Originator Phone		Category	PER
Origination Date	02/10/2009 0954	Generic1	None
Remote Task#		Generic2	None
Deliverable	PER Review	Generic3	None
Class	None	View Permissions	Global
Instructions	*No Instructions*		
ROUTING LISTS			
1	Responsible Manager		Inactive
	Evaluate suggestion, enter comments and required actions on PIE/CIM tab of the PER. Disposition in accordance with TFC-ESHQ-Q_C-C-01, Problem Evaluation Request.		
	• Hughey, Markis T - Assign - Completed - 04/08/2009 1608 *Instructions:*		
	• Hughey, Markis T - Assign - Completed - 04/08/2009 1609 *Instructions:* Did you contact the originator about the PER? Document your contact in the response window.		
2	Review Initial PER		Inactive
	Review New PER		
	• ^SO(Malhan, Rakesh) - Review - Concur - 02/10/2009 1315 *Instructions:*		
	• ^PER Screening(Owen, Annette) - Review - Concur - 02/11/2009 1240 *Instructions:*		
	• ^Mgr Review(Owen, Annette) - Review - Concur - 02/12/2009 0907 *Instructions:*		
ATTACHMENTS			

Task# WRPS-PER-2009-0222			
Attachments	1. Link to PER 2. WRPS-0900486_-_[0904080330] Mgt Expectations.pdf 3. WRPS-PER-2009-0222.OriginatorResponse..pdf		
COMMENTS			
Poster	Hughey, Markis T - 04/08/2009 1608		
	PIE/CIM Evaluation Complete		
	Management expectations regarding quality data input and review were reiterated in an interoffice memorandum (WRPS-0900486, attached) issued April 6, 2009.		
Poster	^PER Coordinator (Glaman, Linda R) - 04/23/2009 1113		
	CLOSED		
	PER complete. L Glaman		
TASK DUE DATE HISTORY			
Modified	02/12/2009 0907 - ^PER Coordinator	New Due Date	04/11/2009 1630
Modified	02/12/2009 0907 - ^PER Coordinator	New Due Date	04/11/2009 1630
Modified	02/10/2009 0954 - ^PER Coordinator	New Due Date	02/12/2009 1630
SUB TASK HISTORY			
No Subtasks			
-- end of report --			

CORRESPONDENCE DISTRIBUTION COVERSHEET

Author	Addressee	Correspondence No.
M. T. Hughey	Distribution	WRPS-0900486

Subject: MANAGEMENT EXPECTATIONS

DISTRIBUTION

Name	Location	w/att	Name	Location	w/att
Acob, J. J.	S7-75				
Bughi, K. D.	S7-75				
Garner, B. A.	S7-75				
Harding, R. A.	S7-75				
Irvin, R. L.	S7-75				
Jones, K. L.	S7-75				
Junt, K. Q.	S7-75				
Kenworthy, T. A.	S7-75				
Payne, J. A.	S7-75				
Spauling, D. F.	S7-75				
Tole, J. S.	S7-75				
Urie, M. J.	S7-75				
MTH File/LB					

INTEROFFICE MEMORANDUM

washington river protection solutions

Date: April 6, 2009 WRPS-0900486

To: Distribution

From: M. T. Hughey, Manager
SST Retrieval and Closure Safety and Industrial Hygiene

Subject: MANAGEMENT EXPECTATIONS

Basic expectations are a necessary part of any business. The following are expectations for the SST Retrieval and Closure Safety and Industrial Hygiene group, not only to be consistent, but also to be successful.

Attendance
The Safety and Industrial Hygiene (IH) group will follow the "Personal Time Bank" system as outlined in the Collective Bargaining Agreement. Employees are required to notify and seek approval for any and all requested time off. Only the manager is authorized to approve time off.

In the case of absences due to illness, accident, or emergencies, notifications to the manager or lead Industrial Hygiene Technician (IHT) should be made as soon as possible.

Documentation
All records shall be documented in accordance with TFC-ESHQ-S_IH-C-46, "Industrial Hygiene Reporting and Records Management."

If monitoring or sampling is performed for any reason, IH records will be completed to document the surveys performed and the results. There are no exceptions, even if you are also documenting the surveys on confined space permits, flammable gas routines, or work packages.

Record entries must be clear, accurate, complete, and specific.

- Identify locations specifically by name or nomenclature (e.g. 241-C-110, Riser 7, Inside Vapor Control Zone around S-103 breather filter, etc.). If necessary, identify the monitoring site by the distance/direction from a known location. Avoid general references, such as "inside farm."
- Specify field observations of the work activity and conditions. This includes adjacent/unrelated activities or conditions that might affect survey results.
- Be clear on the sample numbers, project, and type (e.g. IH v. Environmental).

Always complete a field log and be accountable for it. There should always be field notes on the field log.

When performing personal sampling, you must account for the worker/pump every two hours and for the time when the pump is not worn.

Complete the chain-of-custody forms per the procedure rather than by personal preference.

Each record covers one work assignment and shall be completed within 3 working days. It is your responsibility to review and proofread your records before submitting them.

IH Instruments

Prepare and calibrate instruments properly before each use.

It's the responsibility of all IHTs to know and understand the appropriate use of instruments during performance of surveys.

Turn in instruments to the instrument custodian when they are due for calibration, need maintenance, or when notified by the custodian, whichever comes first.

When notified by the custodian to bring in or look for an instrument, respond immediately.

There are three ways to check in/out an instrument: email the custodian, use the check in/out list, or see the custodian directly. If you use the list to check in/out an instrument due for calibration, tag the instrument. Always tag an instrument needing repair/maintenance.

Do not use an instrument unless you check it out first. When you check out an instrument, you are accountable for it. If an instrument is lost or contaminated, report it immediately.

Training

Attend training as scheduled. For classes at HAMMER that start after your normal starting time, report to the café to view safety videos while waiting. If you are released from class before the end of your normal shift, you are to return to your normal place of work unless approved by the manager to use PTB.

Drill Expectations

All drills are to be considered as part of your job assignment unless exempted by the drill team coordinator. Shut down current work in a safe configuration and respond as directed.

Event Reporting

Report any IH event (e.g., chemical contact, data requirements, documents discrepancies, incorrect postings) to the manager, industrial hygienist, or lead IHT immediately and document it on the applicable record.

Immediately report all abnormal conditions to the field work supervisor (FWS)/shift manager and start the appropriate abnormal industrial hygiene response actions as directed.

Injury Report

Report injuries to the manager immediately. If you are injured while not at work and the injury may affect your work, notify the manager upon arriving at work following the injury.

Personal Reading Material

Personal reading material is not allowed while personnel are on duty. Use breaks and lunchtime for any personal reading.

Pre-Job Briefings
Be on time for pre-job briefings and be prepared to speak about industrial hygiene monitoring and sampling requirements for the job. If you arrive to the location of the pre-job and no one is there, contact the FWS immediately. If the FWS is not accessible, contact the lead IHT.

When pre-jobs are held away from the building where you reside, take your instruments and PPE with you so you do not have to return to the building. If you think you cannot prepare your instruments in time to make the pre-job, then ask another IHT for help or contact the FWS and make arrangements.

Procedures
Prior to use, ensure that the most current revision is being used to perform a task. If a procedure does not work as written, work with the manager to get it fixed.

IH Monitoring/Sampling Plan
Know and follow your sampling plan. Do not perform sampling that is not in the plan without approval from the IH.

If you reach an action level on your plan, immediately inform the FWS/shift manager, take the appropriate action, and then contact the industrial hygienist.

Vapor Control Zones
Even an IHT cannot enter a VCZ without supplied air unless a chemical exposure hazard analysis (CEHA) has been developed that covers the work activity you are performing.

If a CEHA has been developed for your work activity, ensure you read and understand it prior to working the job. Always verify that the CEHA is the correct one for a work activity. If you aren't sure, ask the IH.

PPE
Use PPE as required. The PPE provided for you is to be used at work. When not being used, it is to be stored at work.

Required Reading
You are responsible for accessing the Required Reading website when notified of a Required Reading assignment. Required reading must be completed by the date assigned.

Safety Meetings
Attend all scheduled safety meetings unless directed otherwise by the manager.

Start/Stop Times
Arrive to and depart from work on time as noted in the Collective Bargaining Agreement.

General Expectations/Comments
Record time on a daily basis into the TIS or a manual log either at the end of the day or the beginning of the next day. Charge only the hours worked.

When the work activity you are assigned to has been completed or canceled, report back to the lead IHT.

If you use a vehicle, keep it clean.

Treat co-workers with dignity and respect. Be professional. Regard safety and compliance as your top priorities.

Know the industrial hygiene requirements and how they apply to your job. If you do not know, find out.

Housekeep your work space. If you observe IH and safety work practices being improperly performed, make on-the-spot corrections and communicate the problem area(s). Always be positive and constructive in front of others. If you must be negative, do it in private.

Use the safety concern process and encourage others to do the same. We cannot improve if we are not aware of the issue. Remember, you are the IH professionals in the field. Model good safety and IH work practices and rules (360° walk-arounds, using crosswalks/handrails, etc.). Co-workers look to you for direction and support in IH and safety matters.

If you have any questions or require further information, please call me at 373-2874.

MTH:MYR

cc:	WRPS Correspondence Control	H6-08
	M. C. Call	S7-75
	J. W. Jabara	S7-75
	M. A. Lindholm	S7-83
	M. J. Powers	S7-75
	W. E. Ross	S7-83
	S. A. Saunders	S7-83
	K. D. Smith	S7-83
	MTH File/LB	

Rensink, Gail L

From: Caldwell, Joyce A
Sent: Thursday, April 09, 2009 9:27 AM
To: Rensink, Gail L
Subject: RE: PER WRPS-PER-2009-0222

I think the Management Expectations memo is an excellent method to clearly communicate to the technicians.
Yes, I concur with the actions.

Joyce A Caldwell
Washington River Protection Solutions
S&H, Data & Records Mgmt.
wk: 509-376-0737
cell: 509-308-0747

From: Rensink, Gail L
Sent: Thursday, April 09, 2009 8:17 AM
To: Caldwell, Joyce A
Subject: PER WRPS-PER-2009-0222

You check "I would like to review the the corrective actions at closure to ensure they were effective" on the subject PER. Please review the corrective action and let me know if you concur.

http://tfc.rl.gov/per/index.cfm?page=main.cfm&perid=29470

Thanks.

Gail Rensink, SST Retrieval and Closure
372-0092

Save

Problem Evaluation Request (PER)

WRPS-PER-2009-0226
Closed 02/13/2009 09:30

PER No	Date of Discovery	Time of Discovery (24:00)	Project
WRPS-PER-2009-0226	02/11/2009	00:00	Base Ops

Location

C Farm

How Was Problem Discovered

Routine Work

Description of Concern or Problem

TREND ONLY - NO ACTION REQUIRED. This PER is written for automated PAAA/WSH trending purposes only. January 2009 First Aid Case. Assign to Craig Anderson.

200E/C-Farm – BASE OPS, Operations – FIRST AID – Employee reported slight headache after smelling odor in farm. Employee was treated at AMH and returned to work with no restrictions.

Requirement Not Satisfied	Source Document Number
None.	

Equipment Identification Number	System Identification

Immediate actions Taken or Planned

Employee sent to AMH.

Recommended Corrective actions

None.

Originator Contact

No

Originators Name	Originators ID	Originators Phone	Date Initiated
Anderson, Craig E	H0001274	(509) 372-3940	02/11/2009

SHIFT OPERATIONS REVIEW

Title

FIRST AID – Employee reported slight headache after smelling odor in farm.

How Discovered	Agency
self-ID prior to event	

Reportability	SSC Operability	Operability Review	Comp Measures Req
Non-Reportable	N/A	N/A	

Describe actions Taken or Recommended

No immediate BO SO actions identified.

SO Reviewer Name	SO Reviewer ID	SO Reviewer Phone	SO Review Date
Wallgren, Carl B	H0099480	(509) 373-2689	02/11/2009

SCREENING

PER Significance Level	
Trend Only	

Independent Assessment Review	Occurrence Report Number	Externally Identified	
No		No	

Assigned Responsible Manager	Facilities Rep / SSO	Safety Management Rep	
Anderson, Craig E			

Program	Safety Management Program
• N/A	• ^N/A^

PER Screening Comments			
None.			
Causal Code			
MGT/Comm/Train	**Human Performance**	**GEMS**	**Equip/Eng/Other**
Failed Barrier	**ORPS Code**	**Functional Area**	**Work Process**
	Not Applicable	Occupational Safety and Health	• Other
ISMS	**Consequence Code**		
Provide feedback and continuous improvement	• Injury/Other - Minor injuries or illnesses, first aid items - not captured in other consequence categories		
PER Screening Chair	**PER Screening Chair ID**	**PER Screening Chair Phone**	**PER Screening Date**
Owen, Annette	H0054042	(509) 372-0533	02/12/2009
PAAA REVIEW			
PAAA Screening	**PAAA Codes**	**Function Codes**	
Not subject to PAAA			
NTS Report Number	**NTS Report Date**		
Repetitive / Recurrent	**Programmatic**	**Intentional Violation / Misrepresentation**	
No	No	No	
PAAA Screening Comments			
No noncompliance with Worker Safety and Health Rule noted.			
PAAA Reviewer Name	**PAAA Review Date**		
Anderson, Craig E	02/12/2009		
PAAA Approver Name	**PAAA Approve Date**		
Anderson, Craig E	02/13/2009		
SENIOR MANAGEMENT REVIEW/CONCURRENCE			
TF Operations Morning Leadership Call			
TF Operations Morning Leadership Call is no longer required.			
Instructions for Responsible Manager			
Senior Management	**Sr Mgmt ID**	**Sr Mgmt Phone**	**Sr Mgmt Review Date**
Owen, Annette	H0054042	(509) 372-0533	02/13/2009
ATTACHMENTS			
Link to PER			

-- End of Report --
02/13/2009 09:45 AM

Task# WRPS-PER-2009-0226			
E-STARS[R] Report Task Detail Report 02/13/2009 0945			
TASK INFORMATION			
Task#	WRPS-PER-2009-0226		
Subject	Trend; FIRST AID – Employee reported slight headache after smelling odor in farm.		
Parent Task#		Status	CLOSED 02/13/2009
Reference		Due	02/13/2009
Originator	^PER Coordinator	Priority	Medium
Originator Phone		Category	PER
Origination Date	02/11/2009 0851	Generic1	None
Remote Task#		Generic2	None
Deliverable	PER Review	Generic3	None
Class	None	View Permissions	Global
Instructions	*No Instructions*		
ROUTING LISTS			
1	Review Initial PER		Inactive
	Review New PER		
	• ^SO(Wallgren, Carl B) - Review - Concur - 02/11/2009 1234 *Instructions:*		
	• ^PER Screening(Owen, Annette) - Review - Concur - 02/12/2009 1552 *Instructions:*		
	• ^Mgr Review(Owen, Annette) - Review - Concur - 02/13/2009 0911 *Instructions:*		
ATTACHMENTS			
Attachments	1. Link to PER		
COLLABORATION			
COMMENTS			
No Comments			
TASK DUE DATE HISTORY			
Modified	02/11/2009 0851 - ^PER Coordinator	New Due Date	02/13/2009 1630

Task# WRPS-PER-2009-0226
SUB TASK HISTORY
No Subtasks
-- end of report --

Save

Problem Evaluation Request (PER)

WRPS-PER-2009-0295
Closed 04/23/2009 11:45

PER No	Date of Discovery	Time of Discovery (24:00)	Project
WRPS-PER-2009-0295	02/19/2009	11:45	C Farm-RC

Location

C Farm

How Was Problem Discovered

Field Observation

Description of Concern or Problem

Workers were in C-Farm during C-110 Retrieval without IH monitoring. The IH sampling plan for C-110 Retrieval requires air monitoring when workers are in C-Farm during active C-110 Retrieval. Two IHTs were in the farm monitoring but both left without communicating. One crew was left in the farm without IHT monitoring for approximately 5 minutes. This was reported to the OE, who stopped the slurry and supernate pumps until the issue was resolved.

Readings in C-Farm throughout the day were less than the detectable limits. Area sampling was in progress at the time of the concern. No workers reported odors or injuries.

Requirement Not Satisfied	Source Document Number
air monitoring when workers are in C-Farm during active C-110 Retrieval	73D20-JWJ-08-079
Equipment Identification Number	**System Identification**

Immediate actions Taken or Planned

OE paused the transfer IAW procedure.
RC Safety Manager interviewed the IHTs involved and reiterated the sampling plan requirements and the need to do a face-to-face turnover of duties before exiting the farm.
RC Safety Manager briefed RC IHTs, communicated the issue to BO Safety Manager and IHTs for dissemination.
IHT monitoring was restored.

Recommended Corrective actions

Reiterate and communicate the sampling plan requirements to workforce by adding them to Standing Order OPS-08-007.
Improve IHT work assignments and rotation to ensure monitoring is conducted as required.
Analyze the representative area sample.

Originator Contact

All of the above. Assign to RC Safety Manager.

Originators Name	Originators ID	Originators Phone	Date Initiated
Hughey, Markis T	H0055392	(509) 373-2874	02/19/2009

SHIFT OPERATIONS REVIEW

Title

C-110 Retrieval without IHT monitoring

How Discovered	Agency
self-ID prior to event	

Reportability	SSC Operability	Operability Review	Comp Measures Req
Non-Reportable	N/A	N/A	

Describe actions Taken or Recommended

No additional actions taken or recommended by BOSM.

SO Reviewer Name	SO Reviewer ID	SO Reviewer Phone	SO Review Date
Malhan, Rakesh	H0046812	(509) 373-2689	02/21/2009

SCREENING

PER Significance Level	

PIE/CIM			
Independent Assessment Review	**Occurrence Report Number**	**Externally Identified**	
No		No	
Assigned Responsible Manager	**Facilities Rep / SSO**	**Safety Management Rep**	
Hughey, Markis T			
Program		**Safety Management Program**	
• N/A		• Industrial Hygiene	
PER Screening Comments			
No comments (Nancy Brown 02/23/09)			
Causal Code			
MGT/Comm/Train	**Human Performance**	**GEMS**	**Equip/Eng/Other**
Failed Barrier	**ORPS Code**	**Functional Area**	**Work Process**
	Not Applicable	Occupational Safety and Health	• IH Program
ISMS	**Consequence Code**		
Perform work within the controls	• Procedure - Operational - Procedure ambiguous, in error, could not be worked, was not used		
PER Screening Chair	**PER Screening Chair ID**	**PER Screening Chair Phone**	**PER Screening Date**
Brown, Nancy L	H0088797	(509) 373-0992	02/23/2009
PAAA REVIEW			
PAAA Screening	**PAAA Codes**	**Function Codes**	
PAAA, Non-NTS Reportable	• 10 CFR 830.122 (c)(3) • 10 CFR 830.122 (e)(1) • 10 CFR 851.22 (b)(3)	• Corrective Action Program • Industrial Hygiene • Testing, Monitoring, and Measuring	
NTS Report Number	**NTS Report Date**		
Repetitive / Recurrent	**Programmatic**	**Intentional Violation / Misrepresentation**	
No	No	No	
PAAA Screening Comments			
PAAA Reviewer Name	**PAAA Review Date**		
Anderson, Craig E	02/23/2009		
PAAA Approver Name	**PAAA Approve Date**		
Anderson, Craig E	02/24/2009		
SENIOR MANAGEMENT REVIEW/CONCURRENCE			
TF Operations Morning Leadership Call			
TF Operations Morning Leadership Call is no longer required.			
Instructions for Responsible Manager			
Evaluate suggestion, enter comments and required actions on PIE/CIM tab of the PER. Disposition in accordance with TFC-ESHQ-Q_C-C-01, Problem Evaluation Request.			
Senior Management	**Sr Mgmt ID**	**Sr Mgmt Phone**	**Sr Mgmt Review Date**
Owen, Annette	H0054042	(509) 372-0533	02/24/2009
CAUSE ANALYSIS			

Description of Occurrence

Extent of Condition

Safety Significance

Generic Implications

Remedial Corrective Action

Causal Analysis, Apparent Cause and/or Root Cause Analysis

PIE/CIM

Evaluation of PIE/CIM Initiative

In addition to the actions taken (as documented on the first tab) the recommended actions were evaluated.
1. Reiterate and communicate the sampling plan requirements to workforce by adding them to Standing Order OPS-08-007.

Completed and issued on 3/9/09. See attachment OPS-08-007.
2. Improve IHT work assignments and rotation to ensure monitoring is conducted as required.
Action taken and there were no more related incidents up to the time C110 retrieval was paused in March 2009.
3. Analyze the representative area sample.
The sample was analyzed (Survey ID 09-00710 and 09-00725) and all results for C-Farm COPC were less than the detectable limit.

New actions:
The requirement for continuous monitoring when workers are in the farm during active retrieval was also re-evaluated. Data analysis shows that area monitoring for ammonia was less than the detectable limit in the general farm area and inside vapor control zones (VCZ). Data analysis shows that sampling results are less than half the occupational exposure limit for C-Farm and AN-Farm. The analysis is posted on the Safety and Health Toolbox website under CEHA 0309-408 (attached).
The C-110 standing order was revised to remove the requirement (attached OPS-08-007 Rev8).
This was communicated to the C110 Retreival crew on 4/14/09 (see attached calendar appointment "C110 Resumption.pdf" and powerpoint presentation "IH Air Monitoring During C-110 Retrieval").

ATTACHMENTS

C110 Resumption.pdf

CEHA 0309-408.pdf

Link to PER

IH Air Monitoring During C-110 Retrieval.ppt

OPS-08-007 Rev 8.docx

OPS-08-007.doc

AUDIT HISTORY

Change Date	Auditor	Comments
02/24/2009 07:43	Owen, Annette	Responsible Manager Task Launched by Owen, Annette

-- End of Report --
04/23/2009 11:45 AM

Task# WRPS-PER-2009-0295			
E-STARS[R] Report Task Detail Report 04/23/2009 1145			
TASK INFORMATION			
Task#	WRPS-PER-2009-0295		
Subject	PIE; C-110 Retrieval without IHT monitoring		
Parent Task#		Status	CLOSED 04/23/2009
Reference		Due	04/20/2009
Originator	^PER Coordinator	Priority	Medium
Originator Phone		Category	PER
Origination Date	02/19/2009 2117	Generic1	None
Remote Task#		Generic2	None
Deliverable	PER Review	Generic3	None
Class	None	View Permissions	Global
Instructions	*No Instructions*		
ROUTING LISTS			
1	Responsible Manager		Inactive
	Evaluate suggestion, enter comments and required actions on PIE/CIM tab of the PER. Disposition in accordance with TFC-ESHQ-Q_C-C-01, Problem Evaluation Request.		
	• Hughey, Markis T - Assign - Completed - 04/14/2009 1558 *Instructions:*		
	• Hughey, Markis T - Assign - Completed - 04/14/2009 1558 *Instructions:* Did you contact the originator about the PER? Document your contact in the response window.		
2	Review Initial PER		Inactive
	Review New PER		
	• ^SO(Malhan, Rakesh) - Review - Concur - 02/21/2009 0432 *Instructions:*		
	• ^PER Screening(Brown, Nancy L) - Review - Concur - 02/23/2009 1556 *Instructions:*		
	• ^Mgr Review(Owen, Annette) - Review - Concur - 02/24/2009 0741 *Instructions:*		
ATTACHMENTS			

Task# WRPS-PER-2009-0295			
Attachments	1. C110 Resumption.pdf 2. CEHA 0309-408.pdf 3. Link to PER 4. IH Air Monitoring During C-110 Retrieval.ppt 5. OPS-08-007 Rev 8.docx 6. OPS-08-007.doc		
COMMENTS			
Poster	Hughey, Markis T - 04/14/2009 1558		
	PIE/CIM Evaluation		
	In addition to the actions taken (as documented on the first tab of the PER) the recommended actions were evaluated. 1. Reiterate and communicate the sampling plan requirements to workforce by adding them to Standing Order OPS-08-007. Completed and issued on 3/9/09. See attachment OPS-08-007. 2. Improve IHT work assignments and rotation to ensure monitoring is conducted as required. Action taken and there were no more related incidents up to the time C110 retrieval was paused in March 2009. 3. Analyze the representative area sample. The sample was analyzed (Survey ID 09-00710 and 09-00725) and all results for C-Farm COPC were less than the detectable limit. New actions: The requirement for continuous monitoring when workers are in the farm during active retrieval was also re-evaluated. Data analysis shows that area monitoring for ammonia was less than the detectable limit in the general farm area and inside vapor control zones (VCZ). Data analysis shows that sampling results are less than half the occupational exposure limit for C-Farm and AN-Farm. The analysis is posted on the Safety and Health Toolbox website under CEHA 0309-408 (attached). The C-110 standing order was revised to remove the requirement (attached OPS-08-007 Rev8). This was communicated to the C110 Retreival crew on 4/14/09 (see attached calendar appointment "C110 Resumption.pdf" and powerpoint presentation "IH Air Monitoring During C-110 Retrieval").		
Poster	^PER Coordinator (Glaman, Linda R) - 04/23/2009 1144		
	CLOSED		
	PER complete. L Glaman		
TASK DUE DATE HISTORY			
Modified	02/24/2009 0743 - ^PER Coordinator	New Due Date	04/20/2009 1630
Modified	02/19/2009 2117 - ^PER Coordinator	New Due Date	02/21/2009 1630
SUB TASK HISTORY			

Task# WRPS-PER-2009-0295
No Subtasks
-- end of report --

Hughey, Markis T

Subject: C-110 Resumption
Location: G206

Start: Tue 4/14/2009 3:00 PM
End: Tue 4/14/2009 4:30 PM

Recurrence: (none)

Meeting Status: Accepted

Required Attendees: Cato, Joseph E; Livesey, Stephanie H; Hughey, Markis T

When: Tuesday, April 14, 2009 3:00 PM-4:30 PM (GMT-08:00) Pacific Time (US & Canada).

Where: G206

~~*~*~*~*~*~*~*~*

On Tuesday (4/14) at 1500 – Ops, RadCon, IH meeting to discuss preparations for resumption. I will provide a quick review of some of our operational experience during the last C-110 run and a couple of Con-Ops focus areas to look. While I'd like as many of the C-110 qualified personnel to attend as possible, I understand there will some people who will not be able to attend due to high priority work. We will repeat the discussions on a later day as make up.

TANK FARM CHEMICAL EXPOSURE HAZARD ANALYSIS

Air Monitoring in C-Farm and An-Farm during Active 241-C-110 Waste Retrieval

0309-408

I. Work Activity/Task

The work activity is general air monitoring for ammonia when employees are in C-Farm and AN-Farm during active 241-C-110 waste retrieval. This air monitoring requirement is documented in interoffice memorandum 73D20-JWJ-08-079, "241-C-110 Retrieval and Closure Operations Industrial Hygiene Monitoring and Sampling Plan," dated August 4, 2008. The air monitoring requirement is further clarified in Standing Order Number OPS-08-007, "C-110 Retrieval Operations," Revision. 6.

This analysis will review the data collected during active 241-C-110 waste retrieval to determine if continued air monitoring is warranted. This analysis does not apply to other work activities not associated with 241-C-110 retrieval operations that may be conducted concurrently in C-Farm and AN-Farm.

II. Comparable Activities

Air monitoring, personal sampling and area sampling conducted during work activities in C-Farm and AN-Farm while active 241-C-110 waste retrieval was in progress. Work activities include 241-C-110 related activities and other non-related work such as 241-C-104 construction, health physics technician routines, and Industrial Hygiene Technicians general area air monitoring.

III. Hazard Identification

a. The hazardous gases and vapors potentially generated in tank farm waste tanks globally were identified in RPP-22491, *Industrial Hygiene Chemical Vapor Technical Basis*.
b. The specific hazardous gases and vapors potentially generated in C-Farm and AN-Farm were identified during chemical of potential concern (COPC) characterization sampling and documented in reports RPP-RPT-35018 and RPP-RPT-29262, respectively.
c. The COPC for C-Farm are ammonia, nitrous oxide, mercury, and N-Nitrosodimethylamine and the COPC for AN-Farm are ammonia, nitrous oxide, mercury, N-Nitrosodimethylamine, N-Nitrosomethylethylamine, and N-Nitrosomorpholine.

IV. Data Review

a. Air monitoring results for ammonia in C-Farm and AN-Farm during active 241-C-110 waste retrieval from September 2008 through March 2009 were less than the detectable limit. Readings included area air monitoring both inside and outside Vapor Control Zones (VCZ).

Number of Monitoring Activities General Area/VCZ	Number Above Detection Limit	Highest Concentration	Occupational Exposure Limit (OEL)	Action Limit
311/60	0	N/A	25 ppm	12 ppm

b. Personal and area samples for C-Farm and AN-Farm COPC collected in both farms during active 241-C-110 waste retrieval from September 2008 through February 2009 showed the majority of samples were less than the detectable limit. COPC that were detected showed no exposure measurements above 50 percent of the OEL.

COPC	Number of Samples Taken		Number Above Detection Limit		Highest Concentration		OEL
	Personal	Area	Personal	Area	Personal	Area	
Ammonia	31	55	0	1	N/A	0.6 ppm	25 ppm
Mercury	30	55	None		N/A		0.025 mg/m3
Nitrous Oxide	27	52	15	25	2.6 ppm	4.9 ppm	50 ppm
N-Nitrosodimethylamine	31	48	3	0	0.037 ppb	N/A	0.1 ppb
N-Nitrosomethylethylamine	31	48	None		N/A		0.3 ppb
N-Nitrosomorpholine	31	48	None		N/A		0.6 ppb

V. Controls

a. The analysis shows that general air monitoring results are less than the detectable limit for C-Farm and AN-Farm COPC and warrants a revision of the sampling plan to remove the requirement of air monitoring for ammonia when employees are in C-Farm and AN-Farm during active 241-C-110 waste retrieval.

b. Other controls shall remain in effect, including:
   1. Specific air monitoring during 241-C-110 related tasks where systems are breached, VCZs are entered, and during walkdowns of the Waste Transfer Zone.
   2. Personal and area sampling as required.
   3. Responses to odor concerns and other abnormal conditions.

Title:	Name:	Signature:	Date:	Phone:
Industrial Hygienist:	M.T. Hughey		Date: 3/10/09	Phone: 373-2874
IH Peer Review:	J.W. Jabara		Date: 3/10/09	Phone: 373-1385
IH Manager:	W.E. Ross		Date: 3/10/09	Phone: 373-5434
Operations Manager:	J.E. Cato		Date: 3/10/09	Phone: 372-9883

IH Air Monitoring/Sampling During C-110 Retrieval

- Area air sampling for the first 48 hours of exhauster operation and for the first 8 hours of initial sluicing – COMPLETE
- Exhauster emission samples for environmental requirements after initial startup and at 50% retrieval – COMPLETE
- 7 spill reconstruction samples at vulnerable waste transfer points – ONGOING
- Abnormal event air sampling and monitoring - ONGOING
- Personal air sampling and monitoring in C and AN Farm for C-Farm chemicals of potential concern – ONGOING
  - Specific air monitoring during C-110 related tasks where systems are breached, VCZs are entered, and during walkdowns
  - Continuous air monitoring when workers are in the farm during active C-110 retrieval **is no longer required**
    - Data analysis shows that area monitoring for ammonia was less than the detectable limit in the general farm area and inside vapor control zones (VCZ)
    - Data analysis shows that sampling results are less than half the occupational exposure limit for C-Farm and AN-Farm
    - The analysis is posted on the Safety and Health Toolbox website under CEHA 0309-408
    - The C-110 standing order was revised to remove the requirement

COPC	# Samples Taken		# > Detection Limit		Highest Concentration		OEL
	Personal	Area	Personal	Area	Personal	Area	
Ammonia	31	55	0	1	N/A	0.6 ppm	25 ppm
Mercury	30	55	Less than the detectable limit				0.025 mg/m3
Nitrous Oxide	27	52	15	25	2.6 ppm	4.9 ppm	50 ppm
N-Nitrosodimethylamine	31	48	3	0	0.037 ppb	N/A	0.1 ppb
N-Nitrosomethylethylamine	31	48	Less than the detectable limit				0.3 ppb
N-Nitrosomorpholine	31	48	Less than the detectable limit				0.6 ppb

Ammonia Monitoring Activities General Area/VCZ	# > Detection Limit	Highest Concentration	OEL	Action Limit
311/60	0	N/A	25 ppm	12 ppm

BASE OPERATIONS
STANDING ORDER

Standing Order Number	Effective Date	Cancelled Date	Page 1 of 2
OPS-08-007 Rev. ~~7~~8	4/10/09~~3/9/09~~		
Title	**C-110 Retrieval Operations**		

This Standing Order is to clarify the controls and requirements for Retrieval Operations and provide information on the access and entry requirements for the transfer areas.

The following activities will require radiological oversight during operation of the C-110 retrieval system:

- During transfer operations, a SST Retrieval and Closure Radiological Control FLS or delegate shall be on call and available via phone to report to the Site if conditions warrant.
- It is expected a JRG qualified Retrieval and Closure Radiological Control FLS act as the Field Work Supervisor for any TF-OPS-025, "Performance of Radiological Control Investigative Surveys", required to be performed in support of 241-C-110 to AN-106 transfer activities.

SSW Oversight.

- Periodic SSW oversight of C-110 Retrieval will be performed. SSW watches will be scheduled by the C-Farm Retrieval and Closure Manager.

The five new Waste Retrieval Remote Monitoring Cameras can be used by Retrieval Operations to inspect areas near recently installed Remote Area Radiation Monitors along the C-110 transfer route. During retrieval operations, control of the cameras will be coordinated through the Retrieval Operations Engineer.

During Modified Sluicing, the chain of command is from the Retrieval Operations Engineer, to the Base Operations Senior Shift Manager. During any off-normal response, this same chain of command is to be followed. The Retrieval Operations Engineer will provide information and guidance, but the Base Operations Shift Manager will be the final authority of any path forward.

For management direction outside the definition of Modified Sluicing, the normal management chain of the Retrieval Organization applies.

In the event of an alarm or other situation should arise during the retrieval process, the following guidance should be used to evaluate the situation as directed by ARPs or other applicable response documents. It is recognized there is no way to anticipate every possible scenario that could present an unusual situation, however the overall expectation is that prompt actions be taken to determine the existing conditions when an alarm has been activated, i.e. a conservative approach is taken. If an alarm is received that requires entry into the farm to validate or respond to, this entry will be governed by existing documents (e.g., RWP, Survey Task Description, IH Monitoring Plan) provided no other indication of an abnormal condition exists (e.g., MBD normal, RARM's not in alarm, cameras show no visible evidence of a problem). During the response, if conditions change or additional indications of an abnormal condition present themselves, exit the farm and respond in accordance with applicable Abnormal Operating Procedures.

~~Industrial hygiene air monitoring is required when workers are in C Farm and AN Farm during active C-110 Retrieval. General farm monitoring will be provided by C-110 Retrieval IHTs. If a work activity does not have an IHT assigned to it as part of its task, ensure the Retrieval IHT is in the farm prior to entry. Work activities that already require IHT coverage will utilize that IHT to meet the monitoring requirement.~~

To better control the transfer area access and potentially hazardous conditions, a Waste Transfer Zone (WTZ) is posted around the 241-C-110 to 241-AN-106 transfer route. The Waste Transfer Zone (WTZ) is posted with signs that read "Waste Transfer Zone - Shift Manager Permission and Additional Controls Required for entry." The controls required to perform activities within the WTZ that apply during active C-110 transfer to AN-106 are:

- ACED under an RWP that contains WTZ controls
- Alarming Beta and Gamma sensitive dosimeter
- Operating Remote Area Radiation Monitor (RARM) and/or continuous HPT coverage, (per Radiological Monitoring Plan)
  AND
- AUTHORIZATION from the Base Operations Senior Shift Manager

The controls required for personnel traversing the WTZ at "designated posted locations" during active retrieval are:

- Continuous HPT coverage while transiting the WTZ.
- Base Ops Senior Shift Manager approval.

The controls required for entry when C-110 is not transferring are, as indicated by signs that read, "WASTE TRANSFER ZONE, ADMINISTRATIVE LOCKS IN PLACE, NO ADDITIONAL REQUIREMENTS FOR ENTRY:

- C-110 Administrative lock condition established
- Post transfer radiological surveys complete

The normal staffing plan provided below is to support safe operation of the C-110 retrieval system. The sluicing NCO and the lead HPT will be identified and support the Base Operations senior shift manager to meet minimum staffing requirements of AC 5.6, any turnover at these positions will be communicated to the senior shift manager.

Operating Condition	Resource	Number
Retrieval	OE	1
	NCO's	4
	HPT's	4
	IHT's	3

Approved	Signature	Date
P.L. Owen, Manager Shift Operations	*Signature on file*~~*Signature on file*~~	4/10/09~~3/9/09~~

BASE OPERATIONS
STANDING ORDER

Standing Order Number	Effective Date	Cancelled Date	Page 1 of 2
OPS-08-007 Rev. 7	3/9/09		
Title	**C-110 Retrieval Operations**		

This Standing Order is to clarify the controls and requirements for Retrieval Operations and provide information on the access and entry requirements for the transfer areas.

The following activities will require radiological oversight during operation of the C-110 retrieval system:

- During transfer operations, a SST Retrieval and Closure Radiological Control FLS or delegate shall be on call and available via phone to report to the Site if conditions warrant.
- It is expected a JRG qualified Retrieval and Closure Radiological Control FLS act as the Field Work Supervisor for any TF-OPS-025, "Performance of Radiological Control Investigative Surveys", required to be performed in support of 241-C-110 to AN-106 transfer activities.

SSW Oversight.

- Periodic SSW oversight of C-110 Retrieval will be performed. SSW watches will be scheduled by the C-Farm Retrieval and Closure Manager.

The five new Waste Retrieval Remote Monitoring Cameras can be used by Retrieval Operations to inspect areas near recently installed Remote Area Radiation Monitors along the C-110 transfer route. During retrieval operations, control of the cameras will be coordinated through the Retrieval Operations Engineer.

During Modified Sluicing, the chain of command is from the Retrieval Operations Engineer, to the Base Operations Senior Shift Manager. During any off-normal response, this same chain of command is to be followed. The Retrieval Operations Engineer will provide information and guidance, but the Base Operations Shift Manager will be the final authority of any path forward.

For management direction outside the definition of Modified Sluicing, the normal management chain of the Retrieval Organization applies.

In the event of an alarm or other situation should arise during the retrieval process, the following guidance should be used to evaluate the situation as directed by ARPs or other applicable response documents. It is recognized there is no way to anticipate every possible scenario that could present an unusual situation, however the overall expectation is that prompt actions be taken to determine the existing conditions when an alarm has been activated, i.e. a conservative approach is taken. If an alarm is received that requires entry into the farm to validate or respond to, this entry will be governed by existing documents (e.g., RWP, Survey Task Description, IH Monitoring Plan) provided no other indication of an abnormal condition exists (e.g., MBD normal, RARM's not in alarm, cameras show no visible evidence of a problem). During the response, if conditions change or additional indications of an abnormal condition present themselves, exit the farm and respond in accordance with applicable Abnormal Operating Procedures.

Industrial hygiene air monitoring is required when workers are in C-Farm and AN-Farm during active C-110 Retrieval. General farm monitoring will be provided by C-110 Retrieval IHTs. If a work activity does not have an IHT assigned to it as part of its task, ensure the Retrieval IHT is in the farm prior to entry. Work activities that already require IHT coverage will utilize that IHT to meet the monitoring requirement.

To better control the transfer area access and potentially hazardous conditions, a Waste Transfer Zone (WTZ) is posted around the 241-C-110 to 241-AN-106 transfer route. The Waste Transfer Zone (WTZ) is posted with signs that read "Waste Transfer Zone - Shift Manager Permission and Additional Controls Required for entry." The controls required to perform activities within the WTZ that apply during active C-110 transfer to AN-106 are:

- ACED under an RWP that contains WTZ controls
- Alarming Beta and Gamma sensitive dosimeter
- Operating Remote Area Radiation Monitor (RARM) and/or continuous HPT coverage, (per Radiological Monitoring Plan)
  AND
- AUTHORIZATION from the Base Operations Senior Shift Manager

The controls required for personnel traversing the WTZ at "designated posted locations" during active retrieval are:

- Continuous HPT coverage while transiting the WTZ.
- Base Ops Senior Shift Manager approval.

The controls required for entry when C-110 is not transferring are, as indicated by signs that read, "WASTE TRANSFER ZONE, ADMINISTRATIVE LOCKS IN PLACE, NO ADDITIONAL REQUIREMENTS FOR ENTRY:

- C-110 Administrative lock condition established
- Post transfer radiological surveys complete

The normal staffing plan provided below is to support safe operation of the C-110 retrieval system. The sluicing NCO and the lead HPT will be identified and support the Base Operations senior shift manager to meet minimum staffing requirements of AC 5.6, any turnover at these positions will be communicated to the senior shift manager.

Operating Condition	Resource	Number
Retrieval	OE	1
	NCO's	4
	HPT's	4
	IHT's	3

Save

Problem Evaluation Request (PER)

WRPS-PER-2009-0375
Closed 03/12/2009 08:30

PER No	Date of Discovery	Time of Discovery (24:00)	Project
WRPS-PER-2009-0375	02/25/2009	00:00	Base Ops

Location

C Farm

How Was Problem Discovered

Routine Work

Description of Concern or Problem

TREND ONLY - NO ACTION REQUIRED. This PER is written for automated PAAA/WSH trending purposes only. February 2009 First Aid Case. Assign to Craig Anderson.

200E/C-Farm – BASE OPS: Maintenance/Work Execution, West Day Operations – FIRST AID – Employee experienced headache after smelling odor in tank farm. Employee was treated at AMH and returned to work with no restrictions.

Requirement Not Satisfied	Source Document Number
None	
Equipment Identification Number	**System Identification**

Immediate actions Taken or Planned

Employee sent to AMH.

Recommended Corrective actions

None.

Originator Contact

No

Originators Name	Originators ID	Originators Phone	Date Initiated
Anderson, Craig E	H0001274	(509) 372-3940	03/10/2009

SHIFT OPERATIONS REVIEW

Title

TREND ONLY - FIRST AID – Employee experienced headache after smelling odor in tank farm

How Discovered		Agency	
self-ID result of event			
Reportability	**SSC Operability**	**Operability Review**	**Comp Measures Req**
Non-Reportable	N/A	N/A	

Describe actions Taken or Recommended

No additional actions taken or recommended by BO SM.

SO Reviewer Name	SO Reviewer ID	SO Reviewer Phone	SO Review Date
Malhan, Rakesh	H0046812	(509) 373-2689	03/10/2009

SCREENING

PER Significance Level			
Trend Only			
Independent Assessment Review	**Occurrence Report Number**	**Externally Identified**	
No		No	
Assigned Responsible Manager	**Facilities Rep / SSO**	**Safety Management Rep**	
Anderson, Craig E			
Program		**Safety Management Program**	
• N/A		• Safety & Health	

PER Screening Comments			
No comments (Nancy Brown 03/11/09)			
Causal Code			
MGT/Comm/Train	**Human Performance**	**GEMS**	**Equip/Eng/Other**
Failed Barrier	**ORPS Code**	**Functional Area**	**Work Process**
	Not Applicable	Occupational Safety and Health	• Vapor/Odor Reporting
ISMS	**Consequence Code**		
Develop and implement hazard controls	• Vapor - Tank Related - Employee exposure to a vapor that is tank origin related		
PER Screening Chair	**PER Screening Chair ID**	**PER Screening Chair Phone**	**PER Screening Date**
Brown, Nancy L	H0088797	(509) 373-0992	03/11/2009
PAAA REVIEW			
PAAA Screening	**PAAA Codes**	**Function Codes**	
Not subject to PAAA			
NTS Report Number	**NTS Report Date**		
Repetitive / Recurrent	**Programmatic**	**Intentional Violation / Misrepresentation**	
No	No	No	
PAAA Screening Comments			
PAAA Reviewer Name	**PAAA Review Date**		
Anderson, Craig E	03/11/2009		
PAAA Approver Name	**PAAA Approve Date**		
Anderson, Craig E	03/12/2009		
SENIOR MANAGEMENT REVIEW/CONCURRENCE			
TF Operations Morning Leadership Call			
TF Operations Morning Leadership Call is no longer required.			
Instructions for Responsible Manager			
Senior Management	**Sr Mgmt ID**	**Sr Mgmt Phone**	**Sr Mgmt Review Date**
Owen, Annette	H0054042	(509) 372-0533	03/12/2009
ATTACHMENTS			
Link to PER			

-- End of Report --
03/12/2009 08:45 AM

Task# WRPS-PER-2009-0375			
E-STARS[R] Report Task Detail Report 03/12/2009 0845			
TASK INFORMATION			
Task#	WRPS-PER-2009-0375		
Subject	Trend; TREND ONLY - FIRST AID – Employee experienced headache after smelling odor in tank farm		
Parent Task#		Status	CLOSED 03/12/2009
Reference		Due	03/12/2009
Originator	^PER Coordinator	Priority	Medium
Originator Phone		Category	PER
Origination Date	03/10/2009 1521	Generic1	None
Remote Task#		Generic2	None
Deliverable	PER Review	Generic3	None
Class	None	View Permissions	Global
Instructions	*No Instructions*		
ROUTING LISTS			
1	Review Initial PER		Inactive
	Review New PER		
	• ^SO(Malhan, Rakesh) - Review - Concur - 03/10/2009 1625 *Instructions:*		
	• ^PER Screening(Brown, Nancy L) - Review - Concur - 03/11/2009 1521 *Instructions:*		
	• ^Mgr Review(Owen, Annette) - Review - Concur - 03/12/2009 0807 *Instructions:*		
ATTACHMENTS			
Attachments	1. Link to PER		
COLLABORATION			
COMMENTS			
No Comments			
TASK DUE DATE HISTORY			

Task# WRPS-PER-2009-0375			
Modified	03/10/2009 1521 - ^PER Coordinator	New Due Date	03/12/2009 1630
SUB TASK HISTORY			
No Subtasks			
-- end of report --			

Save

Problem Evaluation Request (PER)

WRPS-PER-2009-0378
Closed 03/12/2009 08:30

PER No	Date of Discovery	Time of Discovery (24:00)	Project
WRPS-PER-2009-0378	02/04/2009	00:00	Radcon-BO

Location

AN Farm

How Was Problem Discovered

Routine Work

Description of Concern or Problem

TREND ONLY - NO ACTION REQUIRED. This PER is written for automated PAAA/WSH trending purposes only. February 2009 First Aid Case. Assign to Craig Anderson.

200W/241-AN – BASE OPS: ESH&Q, RadCon – FIRST AID – Employee experienced headache after possible exposure while changing filter. Employee was treated at AMH and returned to work with no restrictions.

Requirement Not Satisfied	Source Document Number
None	
Equipment Identification Number	**System Identification**

Immediate actions Taken or Planned

Employee sent to AMH.

Recommended Corrective actions

None.

Originator Contact

No

Originators Name	Originators ID	Originators Phone	Date Initiated
Anderson, Craig E	H0001274	(509) 372-3940	03/10/2009

SHIFT OPERATIONS REVIEW

Title

FIRST AID – Employee Experienced Headache after possible exposure while changing filter

How Discovered	Agency
self-ID prior to event	

Reportability	SSC Operability	Operability Review	Comp Measures Req
Non-Reportable	N/A	N/A	

Describe actions Taken or Recommended

No additional actions taken or recommended by Base Ops Shift Office.

SO Reviewer Name	SO Reviewer ID	SO Reviewer Phone	SO Review Date
Malhan, Rakesh	H0046812	(509) 373-2689	03/10/2009

SCREENING

PER Significance Level	
Trend Only	

Independent Assessment Review	Occurrence Report Number	Externally Identified	
No		No	
Assigned Responsible Manager	**Facilities Rep / SSO**	**Safety Management Rep**	
Anderson, Craig E			

Program	Safety Management Program
• N/A	• Safety & Health

PER Screening Comments			
No comments (Nancy Brown 03/11/09)			
Causal Code			
MGT/Comm/Train	**Human Performance**	**GEMS**	**Equip/Eng/Other**
Failed Barrier	**ORPS Code**	**Functional Area**	**Work Process**
	Not Applicable	Occupational Safety and Health	• Vapor/Odor Reporting
ISMS	**Consequence Code**		
Identify and analyze hazards	• Vapor - Other - Employee exposure to a vapor that is non-tank origin related		
PER Screening Chair	**PER Screening Chair ID**	**PER Screening Chair Phone**	**PER Screening Date**
Brown, Nancy L	H0088797	(509) 373-0992	03/11/2009
PAAA REVIEW			
PAAA Screening	**PAAA Codes**	**Function Codes**	
Not subject to PAAA			
NTS Report Number	**NTS Report Date**		
Repetitive / Recurrent	**Programmatic**	**Intentional Violation / Misrepresentation**	
No	No	No	
PAAA Screening Comments			
PAAA Reviewer Name	**PAAA Review Date**		
Anderson, Craig E	03/11/2009		
PAAA Approver Name	**PAAA Approve Date**		
Anderson, Craig E	03/12/2009		
SENIOR MANAGEMENT REVIEW/CONCURRENCE			
TF Operations Morning Leadership Call			
TF Operations Morning Leadership Call is no longer required.			
Instructions for Responsible Manager			
Senior Management	**Sr Mgmt ID**	**Sr Mgmt Phone**	**Sr Mgmt Review Date**
Owen, Annette	H0054042	(509) 372-0533	03/12/2009
ATTACHMENTS			
Link to PER			

-- End of Report --
03/12/2009 08:45 AM

Task# WRPS-PER-2009-0378			
E-STARS[R] Report Task Detail Report 03/12/2009 0845			
TASK INFORMATION			
Task#	WRPS-PER-2009-0378		
Subject	Trend; FIRST AID – Employee Experienced Headache after possible exposure while changing filter		
Parent Task#		Status	CLOSED 03/12/2009
Reference		Due	03/12/2009
Originator	^PER Coordinator	Priority	Medium
Originator Phone		Category	PER
Origination Date	03/10/2009 1527	Generic1	None
Remote Task#		Generic2	None
Deliverable	PER Review	Generic3	None
Class	None	View Permissions	Global
Instructions	*No Instructions*		
ROUTING LISTS			
1	Review Initial PER		Inactive
	Review New PER		
	• ^SO(Malhan, Rakesh) - Review - Concur - 03/10/2009 1608 *Instructions:*		
	• ^PER Screening(Brown, Nancy L) - Review - Concur - 03/11/2009 1525 *Instructions:*		
	• ^Mgr Review(Owen, Annette) - Review - Concur - 03/12/2009 0808 *Instructions:*		
ATTACHMENTS			
Attachments	1. Link to PER		
COLLABORATION			
COMMENTS			
No Comments			
TASK DUE DATE HISTORY			

Task# WRPS-PER-2009-0378			
Modified	03/10/2009 1527 - ^PER Coordinator	New Due Date	03/12/2009 1630
SUB TASK HISTORY			
No Subtasks			
-- end of report --			

Save

Problem Evaluation Request (PER)

WRPS-PER-2008-0389
In Process/Work

PER No	Date of Discovery	Time of Discovery (24:00)	Project
WRPS-PER-2008-0389	12/17/2008	07:30	Day Ops-E

Location

AN Farm

How Was Problem Discovered

DOE FAC REP

Description of Concern or Problem

A review of the ORP Facility Representative's weekly report dated December 8, 2008 indicated the following weakness:

Title: Evaluation of improvements to radcon work practices during hi-risk containment work
Summary:
OA Db entry 4956 relates
Summary of Observation:
1. Pad surfaces where sleeved or bagged items will be worked or placed
2. During waste packaging, remove air when horse-tailing contaminated items
3. Use rounded (non-pointed) scissors on glove bag or containment work
---
Issue Type: OBSERVATION Significance Level: 2
Statement:
Opportunities for improvements to radcon work practices during hi-risk containment work (Ciola 12-10-08)
Discussion:
Size reducing work was being performed on the wasted AN-106 pressure probe. The sleeved pressurization probe read 600 mRAD on contact, beta-gamma. The removable contamination levels on the saw were 1000 DPM/100 cm squared beta-gamma. This work involved the use of an electric saw within a glove bag. The FR noted opportunities for improvement during this work as follows;
- During the work, the sleeved pressurization probe and packaged saw was placed on a rough wooden surface. The surface, which was scaffolding planking, should have been covered with herculite and padded to prevent tears or holes from forming in the waste packaging.
- Pointed scissors were used to disassemble the glovebag, which increases the risk of breaching the containment.
- The packaging operations should also prevent the inclusion of air within the sealed waste bags. This practice increases the chance of breaching the bag when storing or transporting these packages.
Issue Number: 5325

A review of the PER database indicated that this specific issue had not been previously identified.

Requirement Not Satisfied	Source Document Number

Equipment Identification Number	System Identification

Immediate actions Taken or Planned

Wrote this PER.

Recommended Corrective actions

1. Discuss PER Significance Level (i.e., PICIM, TUF, Trend, etc) with the ORP Facility Representative.
2. Resolve to ORP's satisfaction.

Originator Contact

No

Originators Name	Originators ID	Originators Phone	Date Initiated
Hanson, Gregory N	H0078707	(509) 376-2182	12/17/2008

SHIFT OPERATIONS REVIEW

Title

Evaluation of radcon work practices during hi-risk containment work

How Discovered	Agency
FACREP Surveillance	

Reportability	SSC Operability	Operability Review	Comp Measures Req
Non-Reportable	N/A	N/A	
Describe actions Taken or Recommended			
No additional actions taken or recommended by Base Operations Shift Office.			
SO Reviewer Name	**SO Reviewer ID**	**SO Reviewer Phone**	**SO Review Date**
Higham, Dale B	H0078950	(509) 373-2689	12/17/2008
SCREENING			
PER Significance Level			
PIE/CIM			
Independent Assessment Review	**Occurrence Report Number**	**Externally Identified**	
No		Yes	
Assigned Responsible Manager	**Facilities Rep / SSO**	**Safety Management Rep**	
Borrowman, Jerry E			
Program		**Safety Management Program**	
• N/A		• ^N/A^	
PER Screening Comments			
CC: Brad Brannan. LG 12/18/08			
Causal Code			
MGT/Comm/Train	**Human Performance**	**GEMS**	**Equip/Eng/Other**
Failed Barrier	**ORPS Code**	**Functional Area**	**Work Process**
	Not Applicable	Operations	• Radiological Contamination Control
ISMS	**Consequence Code**		
Define scope of work	• Contam - Conduct of Ops - Conduct of radiological operations issues identified that resulted in or could potentially result in failure to adequately control contamination		
PER Screening Chair	**PER Screening Chair ID**	**PER Screening Chair Phone**	**PER Screening Date**
Owen, Annette	H0054042	(509) 372-0533	12/18/2008
PAAA REVIEW			
PAAA Screening	**PAAA Codes**	**Function Codes**	
Not subject to PAAA			
NTS Report Number	**NTS Report Date**		
Repetitive / Recurrent	**Programmatic**	**Intentional Violation / Misrepresentation**	
No	No	No	
PAAA Screening Comments			
PAAA Reviewer Name	**PAAA Review Date**		
Anderson, Craig E	12/18/2008		
PAAA Approver Name	**PAAA Approve Date**		

Anderson, Craig E	12/19/2008	

CAUSE ANALYSIS

Description of Occurrence

Extent of Condition

Safety Significance

Generic Implications

Remedial Corrective Action

Causal Analysis, Apparent Cause and/or Root Cause Analysis

CORRECTIVE ACTIONS

Actionee	Action Due Date	E-STARS Number
Keith, Lloyd J	06/29/2009	WRPS-PER-2008-0389.1

Action

Update Containment Training and Continuous Training to address the issues in WRPS-PER-2008-0389.

Deliverable: Updated training materials.

Corrective Action Attachments

- GLOVE BAG AND CONTAINMENT.pptx
- Link to PER
- Containment Training e-mail

PIE/CIM

Evaluation of PIE/CIM Initiative

Cause of Observation: A6B1C03 - Training Deficiency/No Training Provided/Work incorrectly considered "skill of the craft."

Following this work evolution, the work team held a Post ALARA Review meeting to capture these issues and identify lessons learned. Some of these practices are considered "skill of the craft," however, reinforcement of these practices is appropriate. WRPS Training has agreed to add the needed radiological work practices in Containment Training and to Continuous Training.

The Corrective Actions Taken to Control or Remove any Adverse Impact from the Noncompliant Conditions and the Results Achieved:

The issues identified in this Observation were communicated via Tailgate presentation on February 16, 2009. The presentation material included a summary of lessons learned, containment good practices, and containment precautions.

Corrective Actions Taken to Identify the Extent of Condition:

A search of the PER database containing key word "tear" and "scissor" was performed for the year 2007 through present. Results of the PER search did not include similar instances in which scissors or other miscellaneous tools caused or posed a threat to breaching glove bag containment.

The subject resolution and planned corrective actions were discussed with the ORP Facility Representative prior to closure.

ATTACHMENTS

GLOVE BAG AND CONTAINMENT.pptx

Link to PER

AUDIT HISTORY

Change Date	Auditor	Comments

12/18/2008 14:43	Owen, Annette	'How Discovered' was changed.
12/19/2008 08:08	Owen, Annette	Responsible Manager Task Launched by Owen, Annette
02/27/2009 11:19	Mata, Beth L	Change to Cause Analysis screen/Corrective Action plan.
02/27/2009 11:20	Mata, Beth L	Change to Cause Analysis screen/Corrective Action plan.
02/27/2009 11:21	Mata, Beth L	'Evaluation of PIE/CIM Initiative' was changed.
02/27/2009 12:19	Glaman, Linda R	Corrective actions Launched by Glaman, Linda R
03/03/2009 12:53	Brown, Nancy L	'Selected Consequence Codes' have changed at the request of Jon Hanni (Rad Con SME).

-- End of Report --
08/06/2009 09:48 AM

Task# WRPS-PER-2008-0389

E-STARS[R] Report
Task Detail Report
08/06/2009 0950

TASK INFORMATION			
Task#	WRPS-PER-2008-0389		
Subject	PIE; Evaluation of radcon work practices during hi-risk containment work		
Parent Task#		**Status**	Open
Reference		**Due**	07/17/2009
Originator	^PER Coordinator	**Priority**	Medium
Originator Phone		**Category**	PER
Origination Date	12/17/2008 0803	**Generic1**	None
Remote Task#		**Generic2**	None
Deliverable	PER Review	**Generic3**	None
Class	None	**View Permissions**	Global
Instructions	*No Instructions*		

ROUTING LISTS

1	Corrective actions Routing Lis	Active
	To launch Corrective actions.	
	• ^PER CAs - Assign - Awaiting Response - Due Date - 07/13/2009 0000 *Instructions:*	
2	Responsible Manager	Inactive
	Evaluate suggestion, enter comments and required actions on PIE/CIM tab of the PER. Disposition in accordance with TFC-ESHQ-Q_C-C-01, Problem Evaluation Request.	
	• Borrowman, Jerry E - Assign - Completed - 02/10/2009 1044 *Instructions:*	
3	Review Initial PER	Inactive
	Review New PER	
	• ^SO(Higham, Dale B) - Review - Concur - 12/17/2008 1805 *Instructions:*	
	• ^PER Screening(Owen, Annette) - Review - Concur - 12/18/2008 1446 *Instructions:*	
	• ^Mgr Review(Owen, Annette) - Review - Concur - 12/19/2008 0808 *Instructions:*	

ATTACHMENTS

Attachments	1. GLOVE BAG AND CONTAINMENT.pptx 2. Link to PER

COMMENTS

No Comments

TASK DUE DATE HISTORY

Modified	02/27/2009 1219 - ^PER Coordinator	**New Due Date**	07/17/2009 0000
Modified	02/27/2009 1219 - ^PER Coordinator	**New Due Date**	07/13/2009 0000

Task# WRPS-PER-2008-0389					
Modified	12/19/2008 0808 - ^PER Coordinator			**New Due Date**	02/15/2009 1630
Modified	12/19/2008 0808 - ^PER Coordinator			**New Due Date**	02/15/2009 1630
Modified	12/17/2008 0803 - ^PER Coordinator			**New Due Date**	12/19/2008 1630
SUB TASK HISTORY					
Subtask#	WRPS-PER-2008-0389.1				
Subject	WRPS-PER-2008-0389; PIE; Update Containment Training and Continuous Training to address the issues in WRPS-PER-2008-0389. Deliverable: Updated tra				
Originator	^PER CAs				
	Routing List	Corrective Action			
		Assignee	Keith, Lloyd J	**Response**	Completed w/Com
		Assignee	Borrowman, Jerry E	**Response**	Concur w/Com

-- end of report --

GLOVE BAG AND CONTAINMENT WORK PRACTICES

WRPS-PER-2008-0389

- Size reducing work was being performed on the wasted AN-106 pressure probe. The sleeved pressurization probe read 600 mRAD on contact, beta-gamma. The removable contamination levels on the saw were 1000 DPM/100 cm squared beta-gamma. This work involved the use of an electric saw within a glove bag. The following opportunities for improvement were noted during this work.
  - The sleeved pressurization probe and packaged saw was placed on a rough wooden surface. The surface, which was scaffolding and planking, should have been covered with herculite and padded to prevent tears or holes from forming in the waste packaging.
  - Pointed scissors were used to disassemble the glovebag, which increases the risk of breaching the containment.
  - The packaging operations should also prevent the inclusion of air within the sealed waste bags. This practice increases the chance of breaching the bag when storing or transporting

WRPS-PER-2008-0389 (Cont.)

- Waste packaging and storing practices:
  - Hard surfaces in which packaged radiological materials are to be placed should be padded and covered.
  - Air should be removed from packaging as possible to limit the size of the package and minimize the possibility of ripping or tearing package.
  - Sharp and pointed objects should be limited inside of containments to minimize the possibility of cutting or puncturing the containment.

CONTAINMENT GOOD PRACTICES

- Always use blunted scissors/knives
- When using air tools route air lines through sleeving.
- Ensure absorption material is installed when working with liquids.
- Decon the inside frequently to maintain contamination control.

CONTAINMENT PRECAUTIONS

- Do not breach radiological containments without the proper PPE, respiratory protection or engineering controls outlined in work instructions.
- Do not place un-necessary items into containments to minimize waste.
- When using energized power tools do not plug in until ready for use.

Task# WRPS-PER-2008-0389.1

E-STARS[R] Report
Task Detail Report
08/06/2009 1617

TASK INFORMATION			
Task#	WRPS-PER-2008-0389.1		
Subject	WRPS-PER-2008-0389; PIE; Update Containment Training and Continuous Training to address the issues in WRPS-PER-2008-0389. Deliverable: Updated tra		
Parent Task#	WRPS-PER-2008-0389	**Status**	Open
Reference	WRPS-PER-2008-0389	**Due**	07/09/2009
Originator	^PER CAs	**Priority**	Medium
Originator Phone		**Category**	PER
Origination Date	02/27/2009 1219	**Generic1**	None
Remote Task#		**Generic2**	None
Deliverable	PER Review	**Generic3**	None
Class	None	**View Permissions**	Global
Instructions	*No Instructions*		

ROUTING LISTS

1	Corrective Action	Active
	Update Containment Training and Continuous Training to address the issues in WRPS-PER-2008-0389. Deliverable: Updated training materials. RESPONSIBLE MANAGER: When this corrective action is complete, enter a closure statement in E-STARS and close the E-STARS subtask. Refer to the Problem Evaluation Request procedure TFC-ESHQ-Q-C-C-01, Section 4.4 for closure documentation requirements	
	• Keith, Lloyd J - Assign - Completed with comments - 04/22/2009 1231 *Instructions:* ↳ *Routing List:* Route List - Inactive *Instructions:* • Jennings, Patrick (Rick) - Assign - Completed with comments - 04/22/2009 1223	
	• Borrowman, Jerry E - Review - Concur with comments - 07/06/2009 1226 *Instructions:*	

ATTACHMENTS

Attachments	1. GLOVE BAG AND CONTAINMENT.pptx 2. Link to PER 3. Containment Training e-mail

COMMENTS

Poster	Jennings, Patrick (Rick) - 04/22/2009 1223
	Completed
	Attached the e-mail from Jeffrey Hunter that discusses specific items included in the site-wide containment training course.
Poster	Keith, Lloyd J - 04/22/2009 1231
	Completed
	Answered by the site ALARA center instructor/SME.

Task# WRPS-PER-2008-0389.1			
Poster	Borrowman, Jerry E (Mata, Beth L) - 07/06/2009 1226		
	Concur		
	The corrective actions taken, in conjunction with existing training content, is sufficient to resolve this issue. In addition to the training content, lessons learned from this work evolution were communicated to the workforce via Tailgate on 2-16-09 and discussed during the Post Job ALARA meeting to reinforce expectations while performing work in a glove bag. BLM for JEB		
TASK DUE DATE HISTORY			
Modified	02/27/2009 1219 - ^PER CAs	**New Due Date**	07/09/2009 0000
Modified	02/27/2009 1219 - ^PER CAs	**New Due Date**	07/13/2009 0000
SUB TASK HISTORY			
No Subtasks			

-- end of report --

From: Hunter, Jeffrey L
Sent: Thursday, March 26, 2009 6:26 AM
To: Jennings, Patrick (Rick)
Subject: RE: Containment Training

Rick,

Containment training does address the "pad surfaces" item. However, it does not specifically address "remove air" because that item is only appropriate for specific hazards. Remove air may not be appropriate when working with PU or other IH concerns unless respiratory protection is used. That item is better addressed in work planning meetings and work instructions so it can be tailored to the hazard that you are working with.

I do discuss that Tank Farms is required to use rounded scissors, but have eliminated the use of scissors in class. You may wish to prevent the purchase of any other type of scissors to close that item.

Jeff Hunter
Hanford ALARA Center of Technology
(509) 373-0656, cell (509) 948-5906

From: Jennings, Patrick (Rick)
Sent: Wednesday, March 25, 2009 4:05 PM
To: Hunter, Jeffrey L
Cc: Keith, Lloyd J; Wilson, Donald J
Subject: Containment Training

Mr. Hunter –

Part of the response to WRPS-PER-2008-0389 requires that containment training be evaluated as to whether or not the following topics are addressed:

1. Pad surfaces where sleeved or bagged items will be worked or placed
2. During waste packaging, remove air when horse-tailing contaminated items
3. Use rounded (non-pointed) scissors on glove bag or containment work

Please evaluate Course # 020729, *INSTALLATION, INSPECTION AND REMOVAL OF CONTAINMENT(S)*, to determine if the above topics are addressed in it.

Thank you.

Patrick "Rick" Jennings
TOC Training
373-4783

Save

Problem Evaluation Request (PER)

WRPS-PER-2008-0397
Closed 01/27/2009 09:15

PER No	Date of Discovery	Time of Discovery (24:00)	Project
WRPS-PER-2008-0397	12/10/2008	09:55	RadCon Programs

Location

All Tank Farms

How Was Problem Discovered

WRPS Lessons Learned

Description of Concern or Problem

on 12/10/2008 hpt issued a stop work for intrusive work { digging in a underground radioactive materials area }, because the company has approved two different methods. one method is covered by hnf-5183 article 237 # 5 for posting underground radioactive materials area during intrusive and has a shall statement. method two is to not use article 237 #5 in hnf-5183 but instead piece meal another method from article 231 # 14 only , and use work planning to meet the requirement for the shall statement from hnf-5183 article 237 #5 .

Requirement Not Satisfied	Source Document Number
hnf-5183 article # 5 shall statement	hnf-5183 article # 5 shall statement
Equipment Identification Number	**System Identification**
n/a	Radiation Monitoring

Immediate actions Taken or Planned

notified rad. con management and issued a stop work for doing intrusive activity { digging in a underground radioactive materials area }.

Recommended Corrective actions

written T.E.D. for the method used to not follow hnf-5183 article #5 for shall statement. please do not say that the company is using another method and does not need to follow shall statement requirement. my concern is with the shall statement and a need to find common ground. the two different methods are miles apart in contamination control . there are many ways to meet in the middle ground for this issue.

Originator Contact

I would like to review the the corrective actions at closure to ensure they were effective

Originators Name	Originators ID	Originators Phone	Date Initiated
Roberson, William L L	H0002204	(509) 373-4449	12/18/2008

SHIFT OPERATIONS REVIEW

Title

Stop work - excavation in URMA

How Discovered	Agency
self-ID prior to event	

Reportability	SSC Operability	Operability Review	Comp Measures Req
Non-Reportable	N/A	N/A	

Describe actions Taken or Recommended

Base Ops SO logged stop work and made required notifications. No further actions.

SO Reviewer Name	SO Reviewer ID	SO Reviewer Phone	SO Review Date
Strasser, David W	H0075556	(509) 373-2689	12/18/2008

SCREENING

PER Significance Level			
PIE/CIM			
Independent Assessment Review	**Occurrence Report Number**	**Externally Identified**	
No		No	
Assigned Responsible	**Facilities Rep / SSO**	**Safety Management Rep**	

Manager			
Rolph, Jim T			
Program		**Safety Management Program**	
• N/A		• ^N/A^	
PER Screening Comments			
None. LG 12/19/08			
Causal Code			
MGT/Comm/Train	**Human Performance**	**GEMS**	**Equip/Eng/Other**
Failed Barrier	**ORPS Code**	**Functional Area**	**Work Process**
	Not Applicable	Radiation Protection	• Radiological Work Planning
ISMS	**Consequence Code**		
Develop and implement hazard controls	• Rad WorkPlan - Planning of Work - Work planning process deficient or inadequate in specifying appropriate hazard controls		
PER Screening Chair	**PER Screening Chair ID**	**PER Screening Chair Phone**	**PER Screening Date**
Owen, Annette	H0054042	(509) 372-0533	12/19/2008
PAAA REVIEW			
PAAA Screening	**PAAA Codes**	**Function Codes**	
Not subject to PAAA			
NTS Report Number	**NTS Report Date**		
Repetitive / Recurrent	**Programmatic**	**Intentional Violation / Misrepresentation**	
No	No	No	
PAAA Screening Comments			
PAAA Reviewer Name	**PAAA Review Date**		
Anderson, Craig E	12/23/2008		
PAAA Approver Name	**PAAA Approve Date**		
Anderson, Craig E	12/23/2008		
SENIOR MANAGEMENT REVIEW/CONCURRENCE			
TF Operations Morning Leadership Call			
No longer performed			
Instructions for Responsible Manager			
Evaluate suggestion, enter comments and required actions on PIE/CIM tab of the PER. Disposition in accordance with TFC-ESHQ-Q_C-C-01, Problem Evaluation Request.			
Senior Management	**Sr Mgmt ID**	**Sr Mgmt Phone**	**Sr Mgmt Review Date**
Glaman, Linda R	H0060893	(509) 376-1776	12/22/2008
CAUSE ANALYSIS			
Description of Occurrence			
Extent of Condition			
Safety Significance			

Generic Implications

Remedial Corrective Action

Causal Analysis, Apparent Cause and/or Root Cause Analysis

PIE/CIM

Evaluation of PIE/CIM Initiative

URMA and SCA intrusive work is required to be governed by the RWP process where the planning process is used to determine the requirements based on historical information/data. Establishing a single method would limit the flexibility that the projects may need to accomplish their work in the best interest of WRPS in support of DOE's mission. The Radiological Controls Program (Central) organization sees no need to establish more restrictive requirements outside of what the regulations and our procedures permit. Either of these posting practices is acceptable from a 10 CFR 835 perspective therefore no technical equivalency document is required. From the information provided and the numerous discussions with those involved with this PER and similar ones, we have been unable to identify a situation that exists that places an employee or the environment in risk of an health or safety issue from this concern.

This PER was initiated by a HPT using stop work authority for intrusive work (digging in URMAs) because WRPS uses two different methods for complying with HNF-5183, Article 237.5. One method is posting the area where intrusive work is taking place as a RBA. The other method using the option provided in Article 237.14 and work planning to be used in place of HNF-5183, Article 237.5, ignoring the "shall" posting requirement.

Stop Work Requirements: HNF-5183 Article 345 Stop Radiological Work Authority

1. Radiological Control Technicians and their supervisors, line supervision, and any worker through their supervisor has the authority and responsibility to stop radiological work activities for any of the following reasons:
a. Inadequate radiological controls;
b. Radiological controls not being implemented; or
c. Radiological Control Hold Point not being satisfied.

2. Stop radiological work authority should be exercised in a justifiable and responsible manner.

3. Once radiological work has been stopped, it shall [Stop Work Authority] not be resumed until proper radiological control has been reestablished (see Part 4 of this Chapter).

4. Resumption of radiological work requires the approval of the line manager responsible for the work and the Radiological Control Manager. Operations after a dose was received in excess of the limits specified in Table 2-1, except those received in accordance with Article 213.4, may be resumed only with the approval of DOE [835.1301(d)].

Discussion and lifting of Stop Work: While discussing the content of this PER and related PER WRPS-PER-2008-0302 with the HPT who invoked their stop work authority it was learned that stop work was initiated while no intrusive URAM work was taking place. The stop work was initiated for radiological work activities that had taken place ~5-6 months ago under the direction of the previous contractor. Although the same work practices would likely occur under WRPS management of the Tank Operations Project, this matter or some future concern could be addressed equally well under the employee concerns process. Based on the extensive review conducted as a result of this concern and the conclusion made in the Evaluation section of this PER, the Central RADCON Manager is confident adequate radiological controls are being implemented and the Stop Work should be lifted. There is no requirement to develop a Technical Equivalency Document as current regulations are being followed and there is no need to deviate from the TFRCM or regulations.

A HPT, the safety representative, and union steward expressed their dissatisfaction with the results of the evaluation and conclusions made in this PER when reviewed with them. A copy of procedure TF-BSM-AD-C-10, "Differing Professional Opinion Resolution," was provided for consideration since the conclusion of this PER did not obtain the conclusion they were seeking.

JTR

ATTACHMENTS

e-mail from Dave Pattee results of PER reviewed with originator

Link to PER

Detailed Evaluation of URAM Stop Work Issue contained in PER

AUDIT HISTORY

Change Date	Auditor	Comments
12/22/2008 10:31	Glaman, Linda R	Responsible Manager Task Launched by Glaman, Linda R
12/23/2008 06:59	Anderson, Craig E	PAAA Screening Changed

-- End of Report --
01/27/2009 09:15 AM

Task# WRPS-PER-2008-0397

E-STARS[R] Report
Task Detail Report
01/27/2009 0915

TASK INFORMATION

Task#	WRPS-PER-2008-0397		
Subject	PIE; Stop work - excavation in URMA		
Parent Task#		Status	CLOSED 01/27/2009
Reference		Due	02/16/2009
Originator	^PER Coordinator	Priority	Medium
Originator Phone		Category	PER
Origination Date	12/18/2008 0920	Generic1	None
Remote Task#		Generic2	None
Deliverable	PER Review	Generic3	None
Class	None	View Permissions	Global
Instructions	*No Instructions*		

ROUTING LISTS

1	Responsible Manager	Inactive
	Evaluate suggestion, enter comments and required actions on PIE/CIM tab of the PER. Disposition in accordance with TFC-ESHQ-Q_C-C-01, Problem Evaluation Request.	
	• Rolph, Jim T - Assign - Completed with comments - 01/05/2009 1929 *Instructions:*	
	• Rolph, Jim T - Assign - Completed with comments - 01/05/2009 1934 *Instructions:* Did you contact the originator about the PER? Document your contact in the response window.	
2	Review Initial PER	Inactive
	Review New PER	
	• ^SO(Strasser, David W) - Review - Concur - 12/18/2008 1145 *Instructions:*	
	• ^PER Screening(Owen, Annette) - Review - Concur - 12/19/2008 1134 *Instructions:*	
	• ^Mgr Review(Glaman, Linda R) - Review - Concur - 12/22/2008 1031 *Instructions:*	

ATTACHMENTS

Task# WRPS-PER-2008-0397	
Attachments	1. e-mail from Dave Pattee results of PER reviewed with originator 2. Link to PER 3. Detailed Evaluation of URAM Stop Work Issue contained in PER
COLLABORATION	
COMMENTS	
Poster	Rolph, Jim T - 01/05/2009 0701

URMA and SCA intrusive work is required to be governed by the RWP process where the planning process is used to determine the requirements based on historical information/data. Establishing a single method would limit the flexibility that the projects may need to accomplish their work in the best interest of WRPS in support of DOE's mission. The Radiological Controls Program (Central) organization sees no need to establish more restrictive requirements outside of what the regulations and our procedures permit. Either of these posting practices is acceptable from a 10 CFR 835 perspective therefore no technical equivalency document is required. From the information provided and the numerous discussions with those involved with this PER and similar ones, we have been unable to identify a situation that exists that places an employee or the environment in risk of an health or safety issue from this concern.

This PER was initiated by a HPT using stop work authority for intrusive work (digging in URMAs) because WRPS uses two different methods for complying with HNF-5183, Article 237.5. One method is posting the area where intrusive work is taking place as a RBA. The other method using the option provided in Article 237.14 and work planning to be used in place of HNF-5183, Article 237.5, ignoring the "shall" posting requirement.

Stop Work Requirements:
HNF-5183 Article 345 Stop Radiological Work Authority
1. Radiological Control Technicians and their supervisors, line supervision, and any worker through their
supervisor has the authority and responsibility to stop radiological work activities for any of the
following reasons:
a. Inadequate radiological controls;
b. Radiological controls not being implemented; or
c. Radiological Control Hold Point not being satisfied.
2. Stop radiological work authority should be exercised in a justifiable and responsible manner.
3. Once radiological work has been stopped, it shall [Stop Work Authority] not be resumed until proper
radiological control has been reestablished (see Part 4 of this Chapter).
4. Resumption of radiological work requires the approval of the line manager responsible for the work and the Radiological Control Manager. Operations after a dose was received in excess of the limits
specified in Table 2-1, except those received in accordance with Article 213.4, may be

Task# WRPS-PER-2008-0397	
	resumed only with the approval of DOE [835.1301(d)]. Discussion and lifting of Stop Work: While discussing the content of this PER and related PER WRPS-PER-2008-0302 with the HPT who invoked their stop work authority it was learned that stop work was initiated while no intrusive URAM work was taking place. The stop work was initiated for radiological work activities that had taken place ~5-6 months ago under the direction of the previous contractor. Although the same work practices would likely occur under WRPS management of the Tank Operations Project, this matter or some future concern could be addressed equally well under the employee concerns process. Based on the extensive review conducted as a result of this concern and the conclusion made in the Evaluation section of this PER, the Central RADCON Manager is confident adequate radiological controls are being implemented and the Stop Work should be lifted. There is no requirement to develop a Technical Equivalency Document as current regulations are being followed and there is no need to deviate from the TFRCM or regulations. A HPT, the safety representative, and union steward expressed their dissatisfaction with the results of the evaluation and conclusions made in this PER when reviewed with them. A copy of procedure TF-BSM-AD-C-10, "Differing Professional Opinion Resolution," was provided for consideration since the conclusion of this PER did not obtain the conclusion they were seeking. JTR
Poster	Rolph, Jim T - 01/05/2009 0701
	Completed
	URMA and SCA intrusive work is required to be governed by the RWP process where the planning process is used to determine the requirements based on historical information/data. Establishing a single method would limit the flexibility that the projects may need to accomplish their work in the best interest of WRPS in support of DOE's mission. The Radiological Controls Program (Central) organization sees no need to establish more restrictive requirements outside of what the regulations and our procedures permit. Either of these posting practices is acceptable from a 10 CFR 835 perspective therefore no technical equivalency document is required. From the information provided and the numerous discussions with those involved with this PER and similar ones, we have been unable to identify a situation that exists that places an employee or the environment in risk of an health or safety issue from this concern. This PER was initiated by a HPT using stop work authority for intrusive work (digging in URMAs) because WRPS uses two different methods for complying with HNF-5183, Article 237.5. One method is posting the area where intrusive work is taking place as a RBA. The other method using the option provided in Article 237.14 and work planning to be used in place of HNF-5183, Article 237.5, ignoring the "shall" posting requirement. Stop Work Requirements: HNF-5183 Article 345 Stop Radiological Work Authority 1. Radiological Control Technicians and their supervisors, line supervision, and any worker through their supervisor has the authority and responsibility to stop radiological work activities for

Task# WRPS-PER-2008-0397	
	any of the following reasons: a. Inadequate radiological controls; b. Radiological controls not being implemented; or c. Radiological Control Hold Point not being satisfied. 2. Stop radiological work authority should be exercised in a justifiable and responsible manner. 3. Once radiological work has been stopped, it shall [Stop Work Authority] not be resumed until proper radiological control has been reestablished (see Part 4 of this Chapter). 4. Resumption of radiological work requires the approval of the line manager responsible for the work and the Radiological Control Manager. Operations after a dose was received in excess of the limits specified in Table 2-1, except those received in accordance with Article 213.4, may be resumed only with the approval of DOE [835.1301(d)]. Discussion and lifting of Stop Work: While discussing the content of this PER and related PER WRPS-PER-2008-0302 with the HPT who invoked their stop work authority it was learned that stop work was initiated while no intrusive URAM work was taking place. The stop work was initiated for radiological work activities that had taken place ~5-6 months ago under the direction of the previous contractor. Although the same work practices would likely occur under WRPS management of the Tank Operations Project, this matter or some future concern could be addressed equally well under the employee concerns process. Based on the extensive review conducted as a result of this concern and the conclusion made in the Evaluation section of this PER, the Central RADCON Manager is confident adequate radiological controls are being implemented and the Stop Work should be lifted. There is no requirement to develop a Technical Equivalency Document as current regulations are being followed and there is no need to deviate from the TFRCM or regulations. A HPT, the safety representative, and union steward expressed their dissatisfaction with the results of the evaluation and conclusions made in this PER when reviewed with them. A copy of procedure TF-BSM-AD-C-10, "Differing Professional Opinion Resolution," was provided for consideration since the conclusion of this PER did not obtain the conclusion they were seeking. JTR
Poster	Rolph, Jim T - 01/05/2009 0701
	Completed
	The originator was contacted about the PER a couple of times. The last contact was conducted on 1/2/09. The originator did not agree with the response. See PER detailed evaluation for more information. JTR
Poster	^PER Coordinator (Glaman, Linda R) - 01/27/2009 0901
	CLOSED
	PER complete. L Glaman
TASK DUE DATE HISTORY	

Task# WRPS-PER-2008-0397			
Modified	12/22/2008 1031 - ^PER Coordinator	New Due Date	02/16/2009 1630
Modified	12/22/2008 1031 - ^PER Coordinator	New Due Date	02/16/2009 1630
Modified	12/18/2008 0920 - ^PER Coordinator	New Due Date	12/20/2008 1630
SUB TASK HISTORY			
No Subtasks			
-- end of report --			

From: Pattee, David W
To: Doss, Greggory C;
cc: Rolph, James T;
Subject: FW: URMA PER Responses
Date: Wednesday, December 31, 2008 1:50:32 PM
Attachments: PER-2008-0397.docx
PER-2008-0302.docx

Reviewed these answers with Bill and Gregg.

David

From: Rolph, James T
Sent: Tuesday, December 30, 2008 7:53 AM
To: Pattee, David W
Cc: Brannan, Patrick B (Brad)
Subject: URMA PER Responses

Dave,
Attached are the responses for the two PERs that Bill Roberson originated. Since he doesn't have e-mail, will you please provide and review with him attached the documents? Once this has been completed, let me know and I'll close the PERs. This will enable him to proceed to the next step of the process in a timely manner.
Thanks,
Jim

WRPS-PER-2008-0397 EVALUATION:

The subject PER states: a HPT issued a stop work for intrusive work (digging in URMAs) because WRPS uses two different methods for complying with HNF-5183, Article 237.5. One method is posting the area where intrusive work is taking place as a RBA. The other method using the option provided in Article 237.14 and work planning to be used in place of HNF-5183, Article 237.5, ignoring the "shall" posting requirement.

The PER asks Central RADCON to establish a T.E.D. (Technical Equivalency Document) for the second method. The PER asks Central RADCON not to ignore the "shall" requirement and to establish a common ground between the two practices in contamination control.

This PER is essentially the same as WRPS-PER-2008-0302, therefore essentially the same response will be used except the response will also refer to the Stop Work requirements.

REQUIREMENTS:
HNF-5183 Article 231.14 states "Areas may be excepted from the posting requirements of this Manual for periods of less than 8 continuous hours when placed under continuous observation and control of an individual knowledgeable of, and empowered to implement, required access and exposure control measures [835.604(a)]. [RPP # 137 & 138]"

HNF-5183 Article 237.5 states "Any area within an Underground Radioactive Material Area in which an intrusive activity is performed shall be posted as either a Radiological Buffer Area or a Contamination Area [HSD E.6]."

TFC-ESHQ-RP_MON-C-14, section 4.1, General Requirements, states "Radiological postings for these areas are implemented by TFC-ESHQ-RP_MON-C-18"

Section 4.2, General Controls for all Contaminated Radiological Areas and Radiological Buffer Areas, states "Post the area, or, if the area is to be established for less than eight hours, designate a qualified individual to control area access in accordance with TFC-ESHQ-RP_MON-C-18"

Section 4.4.2 states "Ensure that work controls for soil disturbing work in soil contamination and underground radioactive material areas include, as a minimum, reposting of the area as a radiological buffer area (established for contamination control)."

TFC-ESHQ-RP-MON-C-18, section 4.1, Posting, states "Individuals may be substituted for normal posting signs if the posting is for less than eight consecutive hours. Individuals must be knowledgeable of requirements, provide continuous observation and control, and be empowered to implement control over access and exposure measures."

NONMANDATORY APPROACHES FOR MEETING REQUIREMENTS
DOE G 441.1-1C, Radiation Protection Program Guide speaks to posting for potential to be based upon professional judgment or experience in regard to posting.

12.2.1 Content
This guide refers to Chapter 2 of the RCS (DOE -STD-1098-99 (December 2004), Radiological Control) for posting of areas where underground radioactive materials are present. It goes further that posting

URMAs is not required to ensure compliance with the posting requirements of 10 CFR 835 such postings may provide an additional regulatory margin and degree of protection to affected individuals.

12.2 .3 Conditions

Radiological warnings are posted based upon actual or likely radiological conditions. Actual conditions are determined through area monitoring. Likely conditions should be identified based on professional judgment or experience regarding the probability that a radiological condition will exist. **When evaluating the likelihood of specified conditions, normal situations as well as unique situations which can reasonably be expected to occur should be considered.**

In many operations, the likelihood that a radiological condition will exist, rather than the actual condition, will define the boundaries and posting of a radiological area. For example, opening a contaminated ventilation system in a non-contaminated area may require a contamination area to be established, or opening a radiological vacuum cleaner in a contamination area may require that an airborne radioactivity area be established. Therefore, past monitoring data, work-specific experience, and professional judgment should be included in the decision on the correct posting of each area.

Radiological postings should be completed before work begins, updated periodically when changes in radiological conditions occur or are expected, and removed as soon as is practical when no longer required.

The same implementation guide speaks specifically to the exceptions to the posting requirements as we have previously discussed.

12.2.25 Boundaries and Barriers

10 CFR 835.501(b) requires that the degree of personnel entry control be commensurate with the existing and potential radiological hazards within the area. There may be site-specific situations where the use of boundary identifiers (ropes, chains, fence, etc.) may not be appropriate. These might include large areas with minimal radiological hazards. For these types of situations the time and expense of erecting and maintaining boundary identifiers may not be warranted. **Site-specific controls such as a gate and posting on the access road, supplemented by postings at suitable intervals around the area may be adequate to provide appropriate warning and minimize inadvertent intrusions.**

12.7 Exceptions from Posting Requirements

Accessible areas may be excepted from the radiological area and radioactive material area posting requirements for periods of <8 continuous hours duration when the area is placed under the observation and control of individuals who are knowledgeable of and empowered to implement required access and exposure control measures [10 CFR 835.604(a)]. The observing/controlling individual(s) should be stationed to provide line of sight surveillance of the area boundaries and verbal warnings. For situations that require only simple access control measures, such as entry prevention, a minimally-trained individual would suffice. **For situations that require more complicated access and exposure control measures, a radiological control technician should be used. A sufficient number of individuals should be used to provide for adequate access and exposure control.**

DOE -STD-1098-99 (December 2004) DOE STANDARD RADIOLOGICAL CONTROL
233 Posting Radiological Buffer Areas

Radiological buffer areas are intended to provide secondary boundaries within the controlled area to minimize the spread of contamination and to limit doses to general employees who have not been trained as radiological workers.

1. A radiological buffer area should be established for contamination control adjacent to any entrance to or exit from a contamination, high contamination, or airborne radioactivity area. The size of the radiological buffer area should be commensurate with the potential for the spread of contamination.

2. A radiological buffer area should be established for exposure control adjacent to radiation, high radiation, and very high radiation areas. The boundary for the radiological buffer area should be established to limit radiation doses to general employees to less than 100 milli-rem per year.

3. A radiological buffer area is not required for:

c. Exposure control, if other posted boundaries or controls provide equivalent employee protection

4. The need for radiological buffer areas around radioactive material areas, soil contamination areas, and underground radioactive material areas should be evaluated based upon the potential for exposure of unmonitored individuals and the spread of contamination.

237 Posting Underground Radioactive Material Areas

1. Underground radioactive material areas should be established to indicate the presence of underground items that contain radioactive materials, such as pipelines, radioactive cribs, covered ponds, covered ditches, catch tanks, inactive burial grounds, and sites of known, covered, unplanned releases (spills). Underground radioactive material areas need not be posted if physical or administrative controls are implemented to ensure appropriate radiological controls are established prior to excavating, penetrating, or otherwise disturbing underground radioactive materials.

2. Underground radioactive material areas should be posted "UNDERGROUND RADIOACTIVE MATERIAL." Posting should include instructions or special warnings to workers such as "Consult With Radiological Control Organization Before Digging" or "Subsurface Contamination Exists." The posting should meet the applicable requirements of Article 231.

3. Underground radioactive material areas may be located outside controlled areas unless access is likely to result in individual doses (total effective dose equivalent) greater than 100 millirem in a year from underground radioactive material.

4. Underground radioactive material areas are exempt from the entry and exit requirements of Chapter 3 when access is not likely to result in individual doses greater than 100 millirem in a year. Article 333.1 provides entry provisions for instances in which access is likely to result in individual doses greater than 100 milli-rem in a year.

333 Radioactive Material, Soil Contamination, and Underground Radioactive Material Areas

Minimum requirements for unescorted entry into radioactive material areas, soil contamination areas, and underground radioactive material areas should include training in accordance with Table 3-1. If individual doses are likely to exceed the applicable monitoring thresholds, individual monitoring shall be conducted in accordance with Article 511 and Article 521 [see 835.402(a) and (c)].

336 Member of the Public Entry Provisions
1. Site procedures should identify area entry requirements and access restrictions for members of the public.

2. Members of the public with a demonstrated need to enter the following areas may be allowed access if such access is controlled with a combination of orientation and the use of escorts trained for the specific area:
f. Underground radioactive material areas

DISCUSSION:
Alternate methods for radiological control of activities can be both safe and compliant.
A difference in the way Underground Material Areas (URMAs) are radiologically posted during excavation by two different radiological control organizations was identified by a worker who then raised questions as to the safety and compliance of the work.

One operational organization utilized standard radiological posting (e.g. stanchions and ropes) and accompanying signs. The other organization utilized the exception to posting requirements according to Article 231.14 of the Tank Farm Contractor RCM which states ***"Areas may be excepted from the posting requirements of this Manual for periods of less than 8 continuous hours when placed under continuous observation and control of an individual knowledgeable of, and empowered to implement, required access and exposure control measures."*** This exception is also allowed by 10 CFR 835.603 for access to radiological areas as defined by the law.

This exception provision is implemented in various radiological areas such as contamination, high contamination, radiation, and high radiation areas as appropriate means of control. In the case of URMAs where intrusive (digging) activities are taking place, the area in question would be appropriately controlled upon the discovery and detection of radioactive material much as radiological surveys during the course of any radiological work would be used as the basis for any requisite posting/control changes (For example, if contamination levels greater than those allowed within an established contamination area are detected, controls would be implemented for high contamination areas if authorized by supporting work documents (e.g. Radiological Work Permit)).

The Tank Farm Radiological Control Manual requires that URMAs and Soil Contamination Areas (SCAs) be posted as Radiological Buffer Areas (RBAs) or Contamination Areas (CAs) during intrusive activities which disturb the soil.

For controlling access to URMAs during excavation, either the method of physically establishing posting and control utilizing standard radiological postings (e.g. stanchions and ropes) and accompanying signs, or the provision identified in 231.14 and utilization of continuous observation and control of the area, demonstrates compliance with the requirement to control the area as a RBA, or CA, during intrusive activities. In one case, the posting and barriers provide the direction and control. In the other, a Health Physics Technician provides the control and the radiological history and current status of the URMA from knowledge of surveys performed before, during, and following work.

In addition, the act of digging or mechanically disturbing the soil is considered an "intrusive" activity. The act of walking across a dig site when digging or disturbing of the soil is not occurring is not considered an "intrusive" activity. Therefore, once the HPT surveys have determined that the area no longer requires posting or control of the area as an RBA, no additional control of the area is required

unless specified by the RWP or technical work document. If, during the HPT surveys, contamination is found that exceeds the levels of Table 2-2 (removable survey results), the area is additionally controlled until a disposition is determined. This graded approach is in keeping with the requirements of TFC-ESHQ-RP_MON-C-20, "Survey Methods for Contaminated Soil, Wildlife, and Vegetation".

EVALUATION

Evaluation of regulatory and procedural requirements finds no inconsistency in the posting of URMAs between Base Operations and Closure RADCON organizations outside what our procedures and regulations provide. URMAs have been established in the Tank Operations areas to indicate the potential presence of underground items that contain radioactive materials such as pipelines, inactive burial grounds, and sites of known, covered, unplanned releases (spills). Tank Operations URMAs are posted "UNDERGROUND RADIOACTIVE MATERIAL AREA" and contain the following instructions "Entry Requirements: Prior to excavating contact Radiological Control Organization." Radiological postings are used to alert personnel to the presence of ionizing radiation and radioactive materials and to aid personnel in minimizing exposures and preventing the spread of contamination, thus the URMA postings utilized in the Tank Operation facilities serve the intended purpose.

Intrusive activities (excavating, digging) in URMAs are planned and executed through the radiological work planning process in both Base Operations and Closure RADCON organizations. In the radiological work planning process historical data and surveys are used to determine the appropriate radiological controls to be put in place. The areas being excavated are posted either as Radiological Buffer Areas (RBAs) or if determined during the planning process to be appropriate HPT continuous coverage is provided to serve as the RBA posting as permitted by regulations. HPT coverage is provided during the intrusive activities to monitor for changing radiation and contamination conditions. When excavation activities are terminated for breaks, lunch, or the end of the day appropriate surveys are conducted to verify that the URMA postings remain applicable or require different postings to be installed. These practices are consistent with the regulatory and procedural requirements that serve to meet the requirement to alert personnel to the presence of radiation and radioactive materials and to aide them in minimizing exposures and preventing the spread of contamination. URMAs are exempt from the entry and exit requirements when access is not likely to result in individual doses greater than 100 millirem in a year.

Contamination control is maintained at breaks, lunch, or the end of the day whether or not RBA postings are left in place or removed, as the area remains a URMA and those posting remain in place. As long as the contamination and/or radiation exposure levels encountered or monitored during or after the intrusive (digging) activities remain below those required for further posting requirements, no further controls are necessary. In this condition personnel are alerted to the presence of ionizing radiation and radioactive materials to aid them in minimizing exposures and preventing the spread of contamination with the existing URMA posting, thus the posting purpose is maintained.

Article 231.4 states that "posted areas should be as small as practicable for efficiency." The practice of providing continuous job coverage to meet the posting requirements of Article 237.5 during intrusive activities in URMAs is consistent with this requirement, where as the practice of putting RBA postings and barriers in placed when not required may not the best use of resources from a radiation protection point of view.

Contrary to the PER originator's "recommended actions" that the "shall" statement for HNF-5183, Article 237.5 is not followed with the implementation of Article 231.4 by providing continuous HPT

coverage (this coverage serves as the posting). Since this practice requires continuous HPT coverage when intrusive activities are taking place, this practice may actually provide more control in limiting dose and the spread of contamination when compared to controls put in place with established boundaries and postings that are not continuously covered by HPTs.

The WRPS RADCON Managers representing the projects and central RADCON reviewed and discussed the concern and recommendations contained within this PER. The regulatory and procedural requirements were reviewed and the conclusion made was that our existing process is compliant with the regulations and our commitment to the safety of our fellow workers, the public, and the environment. Applying a more or less restrictive uniform consistent doesn't appear will result in a reduction in potential radiation exposure or spread of contamination.

In summary, URMA and SCA intrusive work is required to be governed by the RWP process where the planning process is used to determine the requirements based on historical information/data. Establishing a single method would limit the flexibility that the projects may need to accomplish their work in the best interest of WRPS in support of DOE's mission. The Radiological Controls Program (Central) organization sees no need to establish more restrictive requirements outside of what the regulations and our procedures permit. Either of these posting practices is acceptable from a 10 CFR 835 perspective therefore no technical equivalency document is required. From the information provided and the numerous discussions with those involved with this PER and similar ones, we have been unable to identify a situation that exists that places an employee or the environment in risk of an health or safety issue from this concern.

This PER was initiated by a HPT using stop work authority for intrusive work (digging in URMAs) because WRPS uses two different methods for complying with HNF-5183, Article 237.5. One method is posting the area where intrusive work is taking place as a RBA. The other method using the option provided in Article 237.14 and work planning to be used in place of HNF-5183, Article 237.5, ignoring the "shall" posting requirement.

Stop Work Requirements:
HNF-5183 Article 345 Stop Radiological Work Authority
1. Radiological Control Technicians and their supervisors, line supervision, and any worker through their supervisor has the authority and responsibility to stop radiological work activities for any of the following reasons:
    a. Inadequate radiological controls;
    b. Radiological controls not being implemented; or
    c. Radiological Control Hold Point not being satisfied.
2. Stop radiological work authority should be exercised in a justifiable and responsible manner.
3. Once radiological work has been stopped, it shall [Stop Work Authority] not be resumed until proper radiological control has been reestablished (see Part 4 of this Chapter).
4. Resumption of radiological work requires the approval of the line manager responsible for the work and the Radiological Control Manager. Operations after a dose was received in excess of the limits specified in Table 2-1, except those received in accordance with Article 213.4, may be resumed only with the approval of DOE [835.1301(d)].

Discussion and lifting of Stop Work:
While discussing the content of this PER and related PER WRPS-PER-2008-0302 with the HPT who invoked their stop work authority it was learned that stop work was initiated while no intrusive URAM

work was taking place. The stop work was initiated for radiological work activities that had taken place ~5-6 months ago under the direction of the previous contractor. Although the same work practices would likely occur under WRPS management of the Tank Operations Project, this matter or some future concern could be addressed equally well under the employee concerns process. Based on the extensive review conducted as a result of this concern and the conclusion made in the Evaluation section of this PER, the Central RADCON Manager is confident adequate radiological controls are being implemented and the Stop Work should be lifted. There is no requirement to develop a Technical Equivalency Document as current regulations are being followed and there is no need to deviate from the TFRCM or regulations.

A HPT, the safety representative, and union steward expressed their dissatisfaction with the results of the evaluation and conclusions made in this PER when reviewed with them. A copy of procedure TF-BSM-AD-C-10, "Differing Professional Opinion Resolution," was provided for consideration since the conclusion of this PER did not obtain the desired conclusion of the PER originator.

Save

Problem Evaluation Request (PER)

WRPS-PER-2008-0399
Closed 01/07/2009 07:30

PER No	Date of Discovery	Time of Discovery (24:00)	Project
WRPS-PER-2008-0399	12/18/2008	15:00	Base Ops

Location

OTHER

How Was Problem Discovered

Field Observation

Description of Concern or Problem

Myself and two other HPT's attended a pre-job meeting on 12/17/2008 at 3:00pm for the 702-AZ primary ventilation spill that had happened earlier in the day. During the course of the pre-job it was asked why the HPT that had covered the earlier entry was not there. It was said that he was sent to AMH as per AOP-011. Two HPT's, an IH Technician, and an Operator arrived at 702-AZ shortly after the completion of the pre-job. HPT's with IH Technician in the lead opened the door without respiratory protection. It was noticed at that point that a strong cleaner (not ammonia) /metallic like odor was escaping to the room where the three of use were located. We exited the area and called the First line Manager, bagged up the tevlar sample as radioactive material (576dpm/100cm2 alpha no beta) put it in the nearest RMA and reported back to 272-AW. It was later found out that the individuals involved in the first instance were taken to AMH due to being exposed to the odor.

Requirement Not Satisfied	Source Document Number

Equipment Identification Number	System Identification

Immediate actions Taken or Planned

Notified HPT First Line
Notified HAMTC Safety Rep
Was taken to AMH on 12/18/2008

Recommended Corrective actions

To be tested for heavy metals.
A better response plan.

Originator Contact

I would like to review the the corrective actions at closure to ensure they were effective

Originators Name	Originators ID	Originators Phone	Date Initiated
Toon, Jon M	H0027658	(509) 373-1654	12/18/2008

SHIFT OPERATIONS REVIEW

Title

HPTs smelled odors while obtaining 702-AZ condensate samples

How Discovered	Agency
self-ID prior to event	

Reportability	SSC Operability	Operability Review	Comp Measures Req
Non-Reportable	N/A	N/A	

Describe actions Taken or Recommended

At the time of the event, the Industrial Health Technician (IHT) detected no volatile organic compounds or ammonia. The work crew reported no symptoms or desire for medical evaluation. The crew was sent to AMH as required by Step 3.1.4 in TF-AOP-011 "Response to Chemical and or Radiological events which states:

"SEND personnel who were in or near the chemical and/or radiation event for medical surveillance regardless of the presence or absence of symptoms as soon as possible but no later than their next scheduled shift."

Afterwards, spill response personnel were sent in to the facility to obtain a smear and tedlar bag. The Industrial Health Representative and Radiation Control Management discussed the required PPE. It was agreed that an IHT would perform sampling and an HPT would donn arm sleeves and gloves to obtain the smear and tedlar bag. At the pre-job meeting, HPTs questioned why it was safe for them to go in without PPE when the earlier work crew was at AMH for evaluation. The Senior Shift Manager informed the HPTs that sending the work crew to AMH was a procedural requirement from the AOP, and that they had no symptoms at the time of the event.

Personnel from the inital event and from the subsequent sampling were returned to work from AMH without restrictions.

SO Reviewer Name	SO Reviewer ID	SO Reviewer Phone	SO Review Date
Wallgren, Carl B	H0099480	(509) 373-2689	12/18/2008

SCREENING

PER Significance Level			
Trend Only			
Independent Assessment Review	**Occurrence Report Number**	**Externally Identified**	
No		No	
Assigned Responsible Manager	**Facilities Rep / SSO**	**Safety Management Rep**	
Jones, Mark W			

Program	Safety Management Program
• N/A	• Industrial Hygiene

PER Screening Comments

Should there be a testing for heavy metals upon vapor exposure personnel? LG 12/19/08

RESCREEN REQUEST (Further Evaluation) Bowman, Tami A acting as Jones, Mark W 12/29/2008

Things that are known to cause a metal-like taste or smell include stomach problems such as heartburn, jaundice, dental problems, many drugs, pregnancy, and heavy metal poisoning.

Heavy metals, with the exception of elemental mercury, are non-volatile and are not components of tank vapors. Elemental mercury is odorless and has not been detected in source or area samples taken at or near 702-AZ.

Testing for heavy metals is not indicated for this situation. AMH occupational medical evaluations already include testing for tank farm chemicals of potential concern and if a worker reports to AMH and describes symptoms, AMH will determine if additional testing is needed.No further action required.

(Annette Owen 12/30/08)

RE-SCREEN COMMENTS for F/E: Change from F/E to Trend Only. Estars task Tuckness_DennisT-2009-0001 has been issued to address the communication concern of the originator.
(Nancy Brown 12/31/08)

Causal Code

MGT/Comm/Train	**Human Performance**	**GEMS**	**Equip/Eng/Other**
Failed Barrier	**ORPS Code**	**Functional Area**	**Work Process**
	Not Applicable	Operations	• IH Program • Personnel Protection Equipment Use (PPE) • Vapor/Odor Reporting
ISMS	**Consequence Code**		
Define scope of work	• Vapor - Tank Related - Employee exposure to a vapor that is tank origin related		
PER Screening Chair	**PER Screening Chair ID**	**PER Screening Chair Phone**	**PER Screening Date**
Owen, Annette	H0054042	(509) 372-0533	12/19/2008

PAAA REVIEW

PAAA Screening	PAAA Codes	Function Codes	
Not subject to PAAA			

NTS Report Number	NTS Report Date		
Repetitive / Recurrent	**Programmatic**	**Intentional Violation / Misrepresentation**	
No	No	No	
PAAA Screening Comments			
PAAA Reviewer Name	**PAAA Review Date**		
Anderson, Craig E	12/19/2008		
PAAA Approver Name	**PAAA Approve Date**		
Anderson, Craig E	12/22/2008		
SENIOR MANAGEMENT REVIEW/CONCURRENCE			
TF Operations Morning Leadership Call			
No longer performed			
Instructions for Responsible Manager			
Senior Management	**Sr Mgmt ID**	**Sr Mgmt Phone**	**Sr Mgmt Review Date**
Owen, Annette	H0054042	(509) 372-0533	12/31/2008
ATTACHMENTS			
Link to PER			
AUDIT HISTORY			
Change Date	**Auditor**	**Comments**	
12/22/2008 10:33	Glaman, Linda R	Responsible Manager Task Launched by Glaman, Linda R	
12/30/2008 07:17	Owen, Annette	'PER Screening Comments' was changed.	
12/30/2008 10:58	Brown, Nancy L	'PER Screening Comments' was changed.	
12/30/2008 13:02	Brown, Nancy L	'PER Screening Comments' was changed.	
12/31/2008 13:30	Brown, Nancy L	'PER Significance Level' was changed from Further Evaluation to Trend Only. 'PER Screening Comments' was changed.	
12/31/2008 13:56	Brown, Nancy L	'PER Screening Comments' was changed.	
12/31/2008 15:43	Owen, Annette	'Instructions for Responsible Manager' was changed.	
01/06/2009 16:15	^PER Coordinator	PER was reopened by AutoClose because the E-Stars task was reopened	
01/07/2009 07:15	Owen, Annette	'PER Screening Comments' was changed.	

-- End of Report --
07/07/2009 02:56 PM

Task# WRPS-PER-2008-0399

E-STARS[R] Report
Task Detail Report
07/07/2009 1457

TASK INFORMATION			
Task#	WRPS-PER-2008-0399		
Subject	Trend; HPTs smelled odors while obtaining 702-AZ condensate samples		
Parent Task#		**Status**	CLOSED 01/07/2009
Reference		**Due**	12/29/2008
Originator	^PER Coordinator	**Priority**	Medium
Originator Phone		**Category**	PER
Origination Date	12/18/2008 1422	**Generic1**	None
Remote Task#		**Generic2**	None
Deliverable	PER Review	**Generic3**	None
Class	None	**View Permissions**	Global
Instructions	*No Instructions*		

ROUTING LISTS		
1	Responsible Manager	Inactive
	Review the PER Screening Tab and Senior Manager Review for requested data. Complete the task in E-STARS in accordance with TFC-ESHQ-Q_C-C-01, Problem Evaluation Request.	
	• Jones, Mark W - Assign - Completed with comments - 12/29/2008 1505 *Instructions:*	
	• Jones, Mark W - Assign - Completed with comments - 12/29/2008 1617 *Instructions:* Did you contact the originator about the PER? Document your contact in the response window.	
	• ^PER Screening(Brown, Nancy L) - Assign - Completed - 12/31/2008 1330 *Instructions:*	
	• ^Mgr Review(Owen, Annette) - Review - Concur - 12/31/2008 1543 *Instructions:*	
2	Review Initial PER	Inactive
	Review New PER	
	• ^SO(Wallgren, Carl B) - Review - Concur - 12/18/2008 1610 *Instructions:*	
	• ^PER Screening(Owen, Annette) - Review - Concur - 12/19/2008 1137 *Instructions:*	
	• ^Mgr Review(Glaman, Linda R) - Review - Concur - 12/22/2008 1032 *Instructions:*	

ATTACHMENTS	
Attachments	1. Link to PER

COMMENTS	
Poster	Jones, Mark W (Bowman, Tami A) - 12/29/2008 1505
	Completed
	Things that are known to cause a metal-like taste or smell include stomach problems such as heartburn, jaundice, dental problems, many drugs, pregnancy, and heavy metal poisoning.

Task# WRPS-PER-2008-0399

	Heavy metal s, with the exception of elemental mercury, are non-volatile and are not components of tank vapors. Elemental mercury is odorless and has not been detected in source or area samples taken at or near 702-AZ. Testing for heavy metals is not indicated for this situation. AMH occupational medical evaluations already include testing for tank farm chemicals of potential concern and if a worker reports to AMH and describes symptoms, AMH will determine if additional testing is needed. No further action required. Tuckness/Bowman 12/29/08
Poster	Jones, Mark W (Bowman, Tami A) - 12/29/2008 1617
	Email sent to originator, 12/29/08 Bowman
Poster	Jones, Mark W (Bowman, Tami A) - 12/29/2008 1617
	Completed
	New comment logged.
Poster	^PER Coordinator (Owen, Annette) - 01/06/2009 1612
	Task Re-Open
	Reopen at request of Dennis Tuckness in order to add further comments.
Poster	^PER Coordinator (Owen, Annette) - 01/07/2009 0713
	Bowman, Tami A -- Completed
	Estars task Tuckness_DennisT-2009-0001 has been issued to address the communication concern of the originator.
Poster	Owen, Annette - 01/07/2009 0714
	Additional Comment
	Estars task Tuckness_DennisT-2009-0001 has been issued to address the communication concern of the originator.

TASK DUE DATE HISTORY

Modified	12/22/2008 1033 - ^PER Coordinator	**New Due Date**	12/29/2008 1630
Modified	12/22/2008 1033 - ^PER Coordinator	**New Due Date**	12/29/2008 1630
Modified	12/18/2008 1422 - ^PER Coordinator	**New Due Date**	12/20/2008 1630

SUB TASK HISTORY

No Subtasks

-- end of report --

Save

Problem Evaluation Request (PER)

WRPS-PER-2008-0415
In Process/Work

PER No	Date of Discovery	Time of Discovery (24:00)	Project
WRPS-PER-2008-0415	12/22/2008	09:30	S&H

Location

272AW

How Was Problem Discovered

Attending a Meeting

Description of Concern or Problem

On 12/22/08 at approximately 0930 hrs. during the HPT morning meeting I asked the on duty RCS if rumors regarding management expectations with respect to concerns raised by the workers where true. I advised the RCS that it was my understanding that if a concern was raised and the RCS spoke with the SUBJECT MATTER EXPERT, it would be the expectation at that point that the workers conduct the work, even if there is still a disagreement between the worker and the SUBJECT MATTER EXPERT. The RCS stated that "yes, that is the expectation however if it was an immediate concern regarding safety or heath we could utilize a stop work otherwise it would be management's expectation that the work be conducted".

With regard to the above stated, I think we need look no further then the PER system to realize that this would be an ill-advised path forward. I myself have written 3 PERs recently in which the direction I was given was inconsistent with the written procedures currently in place. On one occasion I was told to survey diesel soaked dirt for alpha, if I had done the work then wrote a per, there would have been no legitimate recovery plan, due to the inability to survey for alpha emitting isotopes in this environment. The RAD CON manual (article 345) is very specific with regard to stop work responsibility due to inadequate radiological controls. It is for this reason I feel any direction given by the RCS per the SUBJECT MATTER EXPERT be in writing, exonerating the worker of any future litigation.

Requirement Not Satisfied	Source Document Number

Equipment Identification Number	System Identification

Immediate actions Taken or Planned

Notified RCS that I was initiating a per

Recommended Corrective actions

document all direction in writing

Originator Contact

I would like to review the the corrective actions at closure to ensure they were effective

Originators Name	Originators ID	Originators Phone	Date Initiated
Desmarais, Eric E	H2257166	(509) 373-3439	12/22/2008

SHIFT OPERATIONS REVIEW

Title

Radcon Stop Work Issues

How Discovered	Agency
self-ID prior to event	

Reportability	SSC Operability	Operability Review	Comp Measures Req
Non-Reportable	N/A	N/A	

Describe actions Taken or Recommended

No additional actions taken or recommended by BO SO.

SO Reviewer Name	SO Reviewer ID	SO Reviewer Phone	SO Review Date

Andrews, Jeffrey E	H0078933	(509) 373-2689	12/22/2008

SCREENING

PER Significance Level			
PIE/CIM			
Independent Assessment Review	**Occurrence Report Number**	**Externally Identified**	
No		No	
Assigned Responsible Manager	**Facilities Rep / SSO**	**Safety Management Rep**	
Rolph, Jim T			
Program		**Safety Management Program**	
• N/A		• Human Factors	

PER Screening Comments

Contact originator and evaluate issue for possible employee concern. Provide path forward for PER Screening Team.
(Nancy Brown 12/23/08)

RESCREEN REQUEST (F/E) Bickel, Eric E 01/05/2009 1612

This Further Evaluation (FE) consisted of discussion with Base Ops RadCon management, the PER originator, and the Base Ops HAMTC Safety Representative.

The basis issue with the PER originator was how they could respond to direction that they felt was untoward. Much discussion described situations where either the subject matter expert or Base Ops RadCon management provided information or direction (respectively) that was contrary to the PER originator's knowledge/understanding. In at least some situations, the PER originator felt that they were correct and the information/direction provided to them by SME's/management was incorrect. In those cases, the PER originator believes that if written direction had been provided, then they would be protected from possible future repercussions. The PER originator expressed no desire to not perform as instructed.

Again, following much discussion, it was suggested that a formal process be developed and implemented where technical questions/basis could be provided to SME's/management with the final direction provided to concerned parties. This suggestion would address most of the PER originator's original concern. This process could be very similar to the existing FACT process with faster turnover and wider distribution of responses.

It is recommended that this PER be assigned as a PIE/CIM to RadCon Programs to consider development and implementation of a technical question/basis response process/expansion of the FACT process to answer and document routine technical questions/basis/interpretations. Please feel free to contact EE Bickel to discuss the recommended path forward.

The PER originator was heavily involved with the discussion described above and basically agreed to the suggested path forward.

Above response provided by EE Bickel for PB Brannan.

PER SCREENING TEAM: Needs addtional review -- hold this PER until tomorrow's Screening meeting.
(Nancy Brown 01/06/09)

PER RE-SCREENING COMMENTS: Change from F/E to PIE/CIM, re-assign from Brad Brannan to Jim Rolph.
cc: Ed Kennedy
(Nancy Brown 01/07/09)

Causal Code

MGT/Comm/Train	**Human Performance**	**GEMS**	**Equip/Eng/Other**
Failed Barrier	**ORPS Code**	**Functional Area**	**Work Process**
	Not Applicable	Safety Culture	• Hazard Communication • Worker Assessment
ISMS	**Consequence Code**		
	• Communications - Inadequate		

Provide feedback and continuous improvement	communications, roles, responsibilities • Safety Concerns - Safety concerns, suggestions, and potential safety issues		
PER Screening Chair	**PER Screening Chair ID**	**PER Screening Chair Phone**	**PER Screening Date**
Brown, Nancy L	H0088797	(509) 373-0992	12/23/2008
PAAA REVIEW			
PAAA Screening	**PAAA Codes**	**Function Codes**	
PAAA, Non-NTS Reportable	• 10 CFR 830.122 (c)(3)	• Corrective Action Program	
NTS Report Number	**NTS Report Date**		
Repetitive / Recurrent	**Programmatic**	**Intentional Violation / Misrepresentation**	
No	No	No	
PAAA Screening Comments			
PAAA Reviewer Name	**PAAA Review Date**		
Anderson, Craig E	01/19/2009		
PAAA Approver Name	**PAAA Approve Date**		
Anderson, Craig E	01/19/2009		
CAUSE ANALYSIS			
Description of Occurrence			
Extent of Condition			
Safety Significance			
Generic Implications			
Remedial Corrective Action			
Causal Analysis, Apparent Cause and/or Root Cause Analysis			
PIE/CIM			
Evaluation of PIE/CIM Initiative			

WRPS-PER-2008-0415 was assigned as a PIE/CIM to RadCon Programs to consider development and implementation of a technical question/basis response process/expansion of the FACT process to answer and document routine technical questions/basis/interpretations.
The information below represents the Performance Improvement Evaluation/Continuous Improvement Management Initiative as required.
The Radiological Forum establishes radiological control policy and sets minimum standards to ensure consistency in the implementation of Program attributes. Issues requiring clarification or resolution are described in the process carried within TFC-ESHQ-RP_ADM-P-07, "Radiological Control Forum". The process is structured as follows:
If the issue (one or more of the following may apply):

• Identifies a necessary Program change or enhancement;

• Identifies a necessary change or enhancement to the RadCon technical basis;

• Is a required action in response to a new or modified requirement that affects radiological activities;

NOTE: If the issue does not meet any of these criteria, pursue resolution through facility, project, or program technical, interpretive, or management resources.
Complete or coordinate completion of, a draft FACT form (A-6003-103) with the exception of the Radiological Control Forum

Document No.

The collected works of the Radiological Control Forum form the technical basis from which policy, procedure, and practices are developed, maintained, and modified as necessary. The Forum ACTion (FACT) form is an integral part of the Forum process. The FACT is used to bring issues before the forum, make recommendations for addressing raised issues, and document the Forum's decision regarding the issue. The FACT is a "cradle to grave" record of the Forum decision making process.

The incorporation of sufficient instruction to maintain compliance (and therefore safety) should be accomplished with clarity for implementation. Where latitude in methods of implementation is allowable and/or desirable, projects may elect to utilize methods of their choosing. As an example, the requirement for posting radiological areas as mandated by 10 CFR-835.603 contains an exemption provision in section 604.
835.604 Exceptions to posting requirements.

(a) Areas may be excepted from the posting requirements of § 835.603 for periods of less than 8 continuous hours when placed under continuous observation and control of an individual knowledgeable of, and empowered to implement, required access and exposure control measures.
Both methods of hazard identification are acceptable and compliant.

It is determined that existing processes should be sufficient to provide adequate direction for complaint and safe program implementation. No supplementary process need be developed to capture minor decisions outside those necessary to be channeled through the Radiological Control Forum process.

ATTACHMENTS

Link to PER

Pls extend PER 2008-0415 out to 7_31_09.msg

AUDIT HISTORY

Change Date	Auditor	Comments
12/29/2008 11:53	Owen, Annette	'Assigned Responsible Manager' was changed from E Kennedy to B Brannan at request of E Kennedy.
12/29/2008 11:54	Owen, Annette	Responsible Manager Task Launched by Owen, Annette
01/06/2009 07:08	Owen, Annette	'PER Screening Comments' was changed.
01/06/2009 13:13	Brown, Nancy L	'PER Screening Comments' was changed.
01/07/2009 14:12	Brown, Nancy L	'Screening Safety Managemnt Program' was changed. 'PER Significance Level' was changed from Further Evaluation to PIE/CIM. 'Assigned Responsible Manager' was changed. 'PER Screening Comments' was changed. 'Functional Area' was changed. 'Selected Work Processes' have changed. 'Selected Consequence Codes' have changed.
01/07/2009 14:13	Brown, Nancy L	'PER Screening Comments' was changed.
01/08/2009 08:22	Owen, Annette	'Instructions for Responsible Manager' was changed.
01/19/2009 07:03	Anderson, Craig E	PAAA Screening Changed PAAA Codes Changed PAAA Function Codes Changed

-- End of Report --
08/06/2009 09:53 AM

Task# WRPS-PER-2008-0415

E-STARS[R] Report
Task Detail Report
08/06/2009 0954

TASK INFORMATION			
Task#	WRPS-PER-2008-0415		
Subject	PIE; Radcon Stop Work Issues		
Parent Task#		**Status**	Open
Reference		**Due**	08/04/2009
Originator	^PER Coordinator	**Priority**	Medium
Originator Phone		**Category**	PER
Origination Date	12/22/2008 1217	**Generic1**	None
Remote Task#		**Generic2**	None
Deliverable	PER Review	**Generic3**	None
Class	None	**View Permissions**	Global
Instructions	*No Instructions*		

ROUTING LISTS

1	Responsible Manager	Active
	Evaluate suggestion, enter comments and required actions on PIE/CIM tab of the PER. Disposition in accordance with TFC-ESHQ-Q_C-C-01, Problem Evaluation Request.	
	• Brannan, Patrick (Brad) - Assign - Completed with comments - 01/05/2009 1613 *Instructions:*	
	• Brannan, Patrick (Brad) - Assign - Completed with comments - 01/05/2009 1614 *Instructions:* Did you contact the originator about the PER? Document your contact in the response window.	
	• ^PER Screening(Brown, Nancy L) - Assign - Completed - 01/07/2009 1413 *Instructions:*	
	• ^Mgr Review(Owen, Annette) - Review - Concur - 01/08/2009 0822 *Instructions:*	
	• Rolph, Jim T - Assign - Completed with comments - 07/14/2009 1605 *Instructions:* ↳ *Routing List:* Route List - Inactive *Instructions:* • Livesey, Lee M - Assign - Completed with comments - 07/10/2009 1118	
2	Review Initial PER	Inactive
	Review New PER	
	• ^SO(Andrews, Jeffrey E) - Review - Concur - 12/22/2008 1333 *Instructions:*	
	• ^PER Screening(Brown, Nancy L) - Review - Concur - 12/23/2008 1321 *Instructions:*	
	• ^Mgr Review(Owen, Annette) - Review - Concur - 12/29/2008 1154 *Instructions:*	

ATTACHMENTS

Attachments	1. Link to PER 2. Pls extend PER 2008-0415 out to 7_31_09.msg

Task# WRPS-PER-2008-0415

COMMENTS	
Poster	Bickel, Eric E - 01/05/2009 1612
	Further Evaluation
	This Further Evaluation (FE) consisted of discussion with Base Ops RadCon management, the PER originator, and the Base Ops HAMTC Safety Representative. The basis issue with the PER originator was how they could respond to direction that they felt was untoward. Much discussion described situations where either the subject matter expert or Base Ops RadCon management provided information or direction (respectively) that was contrary to the PER originator's knowledge/understanding. In at least some situations, the PER originator felt that they were correct and the information/direction provided to them by SME's/management was incorrect. In those cases, the PER originator believes that if written direction had been provided, then they would be protected from possible future repercussions. The PER originator expressed no desire to not perform as instructed. Again, following much discussion, it was suggested that a formal process be developed and implemented where technical questions/basis could be provided to SME's/management with the final direction provided to concerned parties. This suggestion would address most of the PER originator's original concern. This process could be very similar to the existing FACT process with faster turnover and wider distribution of responses. It is recommended that this PER be assigned as a PIE/CIM to RadCon Programs to consider development and implementation of a technical question/basis response process/expansion of the FACT process to answer and document routine technical questions/basis/interpretations. Please feel free to contact EE Bickel to discuss the recommended path forward. The PER originator was heavily involved with the discussion described above and basically agreed to the suggested path forward. Above response provided by EE Bickel for PB Brannan.
Poster	Brannan, Patrick (Brad) (Bickel, Eric E) - 01/05/2009 1613
	Completed
	This Further Evaluation (FE) consisted of discussion with Base Ops RadCon management, the PER originator, and the Base Ops HAMTC Safety Representative. The basis issue with the PER originator was how they could respond to direction that they felt was untoward. Much discussion described situations where either the subject matter expert or Base Ops RadCon management provided information or direction (respectively) that was contrary to the PER originator's knowledge/understanding. In at least some situations, the PER originator felt that they were correct and the information/direction provided to them by SME's/management was incorrect. In those cases, the PER originator believes that if written direction had been provided, then they would be protected from possible future repercussions. The PER originator expressed no desire to not perform as instructed. Again, following much discussion, it was suggested that a formal process be developed and implemented where technical questions/basis could be provided to SME's/management with the final direction provided to concerned parties. This suggestion would address most of the PER originator's original concern. This process could be very similar to the existing FACT process with faster turnover and wider distribution of responses. It is recommended that this PER be assigned as a PIE/CIM to RadCon Programs to consider development and implementation of a technical question/basis response process/expansion of the FACT process to answer and document routine technical questions/basis/interpretations. Please feel free to contact EE Bickel to discuss the recommended path forward. The PER originator was heavily involved with the discussion described above and basically agreed to the suggested path forward. Above response provided by EE Bickel for PB Brannan.
Poster	Brannan, Patrick (Brad) (Bickel, Eric E) - 01/05/2009 1614
	Completed
	This Further Evaluation (FE) consisted of discussion with Base Ops RadCon management, the

Task# WRPS-PER-2008-0415	
	PER originator, and the Base Ops HAMTC Safety Representative. The PER originator was heavily involved with the discussion described in the FE and basically agreed to the suggested path forward. Above response provided by EE Bickel for PB Brannan.
Poster	^PER Coordinator (Glaman, Linda R) - 05/28/2009 1523
	Extend to 7-31-09 per attached email request. LBG
	Please extend this PIE PER out to 7/31/09 so we can evaluate and discuss with the RADCON Forum Jim Rolph 5-28-09
Poster	Livesey, Lee M - 07/10/2009 1118
	Completed
	WRPS-PER-2008-0415 was assigned as a PIE/CIM to RadCon Programs to consider development and implementation of a technical question/basis response process/expansion of the FACT process to answer and document routine technical questions/basis/interpretations. The information below represents the Performance Improvement Evaluation/Continuous Improvement Management Initiative as required. The Radiological Forum establishes radiological control policy and sets minimum standards to ensure consistency in the implementation of Program attributes. Issues requiring clarification or resolution are described in the process carried within TFC-ESHQ-RP_ADM-P-07, "Radiological Control Forum". The process is structured as follows: If the issue (one or more of the following may apply): • Identifies a necessary Program change or enhancement; • Identifies a necessary change or enhancement to the RadCon technical basis; • Is a required action in response to a new or modified requirement that affects radiological activities; NOTE: If the issue does not meet any of these criteria, pursue resolution through facility, project, or program technical, interpretive, or management resources. Complete or coordinate completion of, a draft FACT form (A-6003-103) with the exception of the Radiological Control Forum Document No. The collected works of the Radiological Control Forum form the technical basis from which policy, procedure, and practices are developed, maintained, and modified as necessary. The Forum ACTion (FACT) form is an integral part of the Forum process. The FACT is used to bring issues before the forum, make recommendations for addressing raised issues, and document the Forum's decision regarding the issue. The FACT is a "cradle to grave" record of the Forum decision making process. The incorporation of sufficient instruction to maintain compliance (and therefore safety) should be accomplished with clarity for implementation. Where latitude in methods of implementation is allowable and/or desirable, projects may elect to utilize methods of their choosing. As an example, the requirement for posting radiological areas as mandated by 10 CFR-835.603 contains an exemption provision in section 604. 835.604 Exceptions to posting requirements. (a) Areas may be excepted from the posting requirements of § 835.603 for periods of less than 8 continuous hours when placed under continuous observation and control of an individual knowledgeable of, and empowered to implement, required access and exposure control measures. Both methods of hazard identification are acceptable and compliant. It is determined that existing processes should be sufficient to provide adequate direction for complaint and safe program implementation. No supplementary process need be developed to capture minor decisions outside those necessary to be channeled through the Radiological Control Forum process.
Poster	Rolph, Jim T - 07/14/2009 1605

Task# WRPS-PER-2008-0415

	Completed		
	Existing program is adequate		
TASK DUE DATE HISTORY			
Modified	05/28/2009 1522 - ^PER Coordinator (Glaman, Linda R)	**New Due Date**	08/04/2009 1630
Modified	01/08/2009 0824 - ^PER Coordinator (Owen, Annette)	**New Due Date**	03/09/2009 1630
Modified	12/29/2008 1154 - ^PER Coordinator	**New Due Date**	01/05/2009 1630
Modified	12/29/2008 1154 - ^PER Coordinator	**New Due Date**	01/05/2009 1630
Modified	12/22/2008 1217 - ^PER Coordinator	**New Due Date**	12/24/2008 1630
SUB TASK HISTORY			
No Subtasks			

-- end of report --

Message

From: Rolph, James T

Sent: Thursday, May 28, 2009 2:51 PM

To: ^WRPS Corrective Action Group

Cc: Livesey, Lee M

Subject: Pls extend PER 2008-0415 out to 7/31/09

TBD00000	WRPS-PER-2008-0415	PIE; Radcon Stop Work Issues	Livesey, Lee M	03-09-2009

Please extend this PIE PER out to 7/31/09 so we can evaluate and discuss with the RADCON Forum

Jim Rolph
WRPS
MSIN: R1-05
376-7686
372-3522 fax
619-3588 cell

Save

Problem Evaluation Request (PER)

WRPS-PER-2008-0425
Closed 04/16/2009 08:45

PER No	Date of Discovery	Time of Discovery (24:00)	Project
WRPS-PER-2008-0425	12/29/2008	08:00	Ops Shifts

Location

AZ Farm

How Was Problem Discovered

DOE FAC REP

Description of Concern or Problem

A review of the ORP Facility Representative's weekly report dated December 15, 2008 indicated the following weakness:

Issue Type: Observation

Statement: On-Call Facility Representative was not notified of possible significant operational event (Wright, 12/18/08)

Discussion: On December 17,2008 approximately one gallon of condensate drained out of the 702-AZ ventilation duct work and onto the floor of the CAM room during vent and balance stack flow testing. AOP-011 Response to Chemical and/or Radiological Events" was entered and access was restricted to the room. A group page was sent out but the on-call Facility Representative was not called and informed of this potentially significant operational event.
Issue Number: 5346

A review of the PER Database indicated that this specific issue had not been previously identified.

Requirement Not Satisfied	Source Document Number

Equipment Identification Number	System Identification

Immediate actions Taken or Planned

Wrote this PER.

Recommended Corrective actions

1. Discuss PER Significance Level (i.e., PICIM, TUF, Trend, etc) with the ORP Facility Representative.
2. Resolve to ORP's satisfaction.

Originator Contact

No

Originators Name	Originators ID	Originators Phone	Date Initiated
Hanson, Gregory N	H0078707	(509) 376-2182	12/29/2008

SHIFT OPERATIONS REVIEW

Title

Possible significant operational event

How Discovered	Agency
FACREP Surveillance	

Reportability	SSC Operability	Operability Review	Comp Measures Req
Non-Reportable	N/A	N/A	

Describe actions Taken or Recommended

No additional Base Ops. Shift Office actions required.

SO Reviewer Name	SO Reviewer ID	SO Reviewer Phone	SO Review Date
Johnson, Brian A	H0003531	(509) 373-2696	12/29/2008

SCREENING

PER Significance Level	
PIE/CIM	

Independent Assessment Review	Occurrence Report Number	Externally Identified	
No		Yes	
Assigned Responsible Manager	**Facilities Rep / SSO**	**Safety Management Rep**	
Owen, Pete			
Program		**Safety Management Program**	
• N/A		• Conduct of Operations	
PER Screening Comments			
Contact DOE ORP Fac Rep and resolve to ORP's satisfaction. (Nancy Brown 12/30/08)			
Causal Code			
MGT/Comm/Train	**Human Performance**	**GEMS**	**Equip/Eng/Other**
Failed Barrier	**ORPS Code**	**Functional Area**	**Work Process**
	Not Applicable	Operations	• Notifications
ISMS	**Consequence Code**		
Perform work within the controls	• Communications - Inadequate communications, roles, responsibilities • Notifications and Abnormal Events - Issues relating to investigation of operational events including quality of critiques and occurrence reports.		
PER Screening Chair	**PER Screening Chair ID**	**PER Screening Chair Phone**	**PER Screening Date**
Brown, Nancy L	H0088797	(509) 373-0992	12/30/2008
PAAA REVIEW			
PAAA Screening	**PAAA Codes**	**Function Codes**	
PAAA, Non-NTS Reportable	• 10 CFR 830.122 (e)(1)	• Communication • Conduct of Operations (including Drills and Exercises)	
NTS Report Number	**NTS Report Date**		
Repetitive / Recurrent	**Programmatic**	**Intentional Violation / Misrepresentation**	
No	No	No	
PAAA Screening Comments			
PAAA Reviewer Name	**PAAA Review Date**		
Anderson, Craig E	12/30/2008		
PAAA Approver Name	**PAAA Approve Date**		
Anderson, Craig E	12/31/2008		
SENIOR MANAGEMENT REVIEW/CONCURRENCE			
TF Operations Morning Leadership Call			
TF Operations Morning Leadership Call is no longer required.			
Instructions for Responsible Manager			
Evaluate suggestion, enter comments and required actions on PIE/CIM tab of the PER. Disposition in accordance with TFC-ESHQ-Q_C-C-01, Problem Evaluation Request.			

Senior Management	Sr Mgmt ID	Sr Mgmt Phone	Sr Mgmt Review Date
Owen, Annette	H0054042	(509) 372-0533	12/31/2008

CAUSE ANALYSIS

Description of Occurrence

Extent of Condition

Safety Significance

Generic Implications

Remedial Corrective Action

Causal Analysis, Apparent Cause and/or Root Cause Analysis

PIE/CIM

Evaluation of PIE/CIM Initiative

Discussed this issue with the responsible Senior Shift Manager (SSM). He informed me that he thought he called the on-call Facility Representative (Fac Rep), but he couldn't remember for sure. He stated that, if he didn't, it was an oversight on his part. The Fac Rep stated that he received the SOEN page and was waiting for a phone call. When he didn't receive a call, the Fac Rep called the SSM at 1545 and the SSM briefed him on the issue.

Note 1 in the Event Notification Matrix (TFC-OPS-OPER-CD-01) states that, "If the on-call facility representative cannot be notified within 30 minutes or is unavailable, contact the ORP facility division manager; voice messaging is not an acceptable method for notification." The SSM was busy dealing with the facility upset that was in progress and lost track of time.

In order to prevent this from occurring again, all of the Shift Managers were instructed to utilize the Red Arrow process whenever they left a message with an on-call person. The Red Arrow will remind them that they need to either try again or call someone higher in the on-call person's management chain. Since this process was instituted, there have not been any further incidents of untimely notifications.

ATTACHMENTS

Link to PER

AUDIT HISTORY

Change Date	Auditor	Comments
12/31/2008 08:42	Owen, Annette	Responsible Manager Task Launched by Owen, Annette

-- End of Report --
04/16/2009 08:45 AM

Task# WRPS-PER-2008-0425

E-STARS[R] Report
Task Detail Report
04/16/2009 0845

TASK INFORMATION

Task#	WRPS-PER-2008-0425		
Subject	PIE; Possible significant operational event		
Parent Task#		Status	CLOSED 04/16/2009
Reference		Due	02/27/2009
Originator	^PER Coordinator	Priority	Medium
Originator Phone		Category	PER
Origination Date	12/29/2008 0835	Generic1	None
Remote Task#		Generic2	None
Deliverable	PER Review	Generic3	None
Class	None	View Permissions	Global
Instructions	*No Instructions*		

ROUTING LISTS

1	Responsible Manager	Inactive
	Evaluate suggestion, enter comments and required actions on PIE/CIM tab of the PER. Disposition in accordance with TFC-ESHQ-Q_C-C-01, Problem Evaluation Request.	
	• Owen, Pete - Assign - Completed with comments - 04/09/2009 1003 *Instructions:*	
2	Review Initial PER	Inactive
	Review New PER	
	• ^SO(Johnson, Brian A) - Review - Concur - 12/29/2008 0854 *Instructions:*	
	• ^PER Screening(Brown, Nancy L) - Review - Concur - 12/30/2008 1115 *Instructions:*	
	• ^Mgr Review - Review - Withdrawn - 12/30/2008 1118 *Instructions:*	
	• ^PER Screening(Brown, Nancy L) - Review - Concur - 12/30/2008 1345 *Instructions:*	
	• ^Mgr Review(Owen, Annette) - Review - Concur - 12/31/2008 0842 *Instructions:*	

Task# WRPS-PER-2008-0425			
ATTACHMENTS			
Attachments	1. Link to PER		
COMMENTS			
Poster	Owen, Pete - 04/09/2009 1003		
	Completed		
	The PIE/CIM evaluation has been completed. There were no corrective actions identified. The Fac Rep has reviewed the evaluation and concurs. Pete Owen Manager, Shift Operations		
Poster	^PER Coordinator (Glaman, Linda R) - 04/16/2009 0834		
	CLOSED		
	PER complete. L Glaman		
TASK DUE DATE HISTORY			
Modified	12/31/2008 0842 - ^PER Coordinator	New Due Date	02/27/2009 1630
Modified	12/31/2008 0842 - ^PER Coordinator	New Due Date	02/27/2009 1630
Modified	12/29/2008 0835 - ^PER Coordinator	New Due Date	12/31/2008 1630
SUB TASK HISTORY			
No Subtasks			
-- end of report --			

Save

Problem Evaluation Request (PER)

WRPS-PER-2008-0427
Closed 12/31/2008 09:00

PER No	Date of Discovery	Time of Discovery (24:00)	Project
WRPS-PER-2008-0427	12/23/2008	08:30	Base Ops

Location

All Tank Farms

How Was Problem Discovered

General Observation

Description of Concern or Problem

An employee discovered an off-scale direct reading dosimeter upon the completion of routine work evolutions. Dose data of a fellow employee conducting the same work with the employeee indicated no exposure was present.

Requirement Not Satisfied	Source Document Number

Equipment Identification Number	System Identification

Immediate actions Taken or Planned

Contacted Dosimetry FPOC from BaseOps.
Dose records were reviewed.
Documentation was reviewed.
Dose was assigned.
NO Administrative Control Level was approached.
Employee was allowed to return to work with no restrictions from RadCon.

Recommended Corrective actions

NONE....Issue this PER as TREND only..

Originator Contact

No

Originators Name	Originators ID	Originators Phone	Date Initiated
Berglund, Owen D	H0039194	(509) 376-9035	12/29/2008

SHIFT OPERATIONS REVIEW

Title

Off-scale direct reading dosimeter

How Discovered	Agency
self-ID prior to event	

Reportability	SSC Operability	Operability Review	Comp Measures Req
Non-Reportable	N/A	N/A	

Describe actions Taken or Recommended

No additional Base Ops. Shift Office actions required.

SO Reviewer Name	SO Reviewer ID	SO Reviewer Phone	SO Review Date
Johnson, Brian A	H0003531	(509) 373-2696	12/29/2008

SCREENING

PER Significance Level			
Trend Only			
Independent Assessment Review	**Occurrence Report Number**	**Externally Identified**	
No		No	
Assigned Responsible	**Facilities Rep / SSO**	**Safety Management Rep**	

Manager			
Brannan, Patrick (Brad)			
Program		**Safety Management Program**	
• N/A		• Radiological Control	
PER Screening Comments			
No comments (Nancy Brown 12/30/08)			
Causal Code			
MGT/Comm/Train	**Human Performance**	**GEMS**	**Equip/Eng/Other**
Failed Barrier	**ORPS Code**	**Functional Area**	**Work Process**
	Not Applicable	Radiation Protection	• Radiological Exposure Control - External Dosimetry
ISMS	**Consequence Code**		
Perform work within the controls	• ExtDos - Investigation - Any field releated issue that results in the requirement to perform an external dose investigation (e.g. lost or damaged dosimetry, dosimetry worn incorrectly, non-occupational exposure of sodimetry, skin or clothing contamination events)		
PER Screening Chair	**PER Screening Chair ID**	**PER Screening Chair Phone**	**PER Screening Date**
Brown, Nancy L	H0088797	(509) 373-0992	12/30/2008
PAAA REVIEW			
PAAA Screening	**PAAA Codes**	**Function Codes**	
Not subject to PAAA			
NTS Report Number	**NTS Report Date**		
Repetitive / Recurrent	**Programmatic**	**Intentional Violation / Misrepresentation**	
No	No	No	
PAAA Screening Comments			
Analysis indicates no noncompliance to regulations.			
PAAA Reviewer Name	**PAAA Review Date**		
Anderson, Craig E	12/31/2008		
PAAA Approver Name	**PAAA Approve Date**		
Anderson, Craig E	12/31/2008		
SENIOR MANAGEMENT REVIEW/CONCURRENCE			
TF Operations Morning Leadership Call			
TF Operations Morning Leadership Call is no longer required.			
Instructions for Responsible Manager			
Senior Management	**Sr Mgmt ID**	**Sr Mgmt Phone**	**Sr Mgmt Review Date**

Owen, Annette	H0054042	(509) 372-0533	12/31/2008
ATTACHMENTS			
Link to PER			
AUDIT HISTORY			
Change Date	**Auditor**	**Comments**	
12/31/2008 06:41	Anderson, Craig E	PAAA Screening Changed	
12/31/2008 06:42	Anderson, Craig E	PAAA Screening Comments Changed	

-- End of Report --
01/07/2009 06:15 PM

Task# WRPS-PER-2008-0427			
E-STARS[R] Report Task Detail Report 01/07/2009 0615			
TASK INFORMATION			
Task#	WRPS-PER-2008-0427		
Subject	Trend; Off-scale direct reading dosimeter		
Parent Task#		Status	CLOSED 12/31/2008
Reference		Due	12/31/2008
Originator	^PER Coordinator	Priority	Medium
Originator Phone		Category	PER
Origination Date	12/29/2008 0924	Generic1	None
Remote Task#		Generic2	None
Deliverable	PER Review	Generic3	None
Class	None	View Permissions	Global
Instructions	*No Instructions*		
ROUTING LISTS			
1	Review Initial PER		Inactive
	Review New PER		
	• ^SO(Johnson, Brian A) - Review - Concur - 12/29/2008 1020 *Instructions:*		
	• ^PER Screening(Brown, Nancy L) - Review - Concur - 12/30/2008 1347 *Instructions:*		
	• ^Mgr Review(Owen, Annette) - Review - Concur - 12/31/2008 0843 *Instructions:*		
ATTACHMENTS			
Attachments	1. Link to PER		
COLLABORATION			
COMMENTS			
No Comments			
TASK DUE DATE HISTORY			
Modified	12/29/2008 0924 - ^PER Coordinator	New Due Date	12/31/2008 1630

Task# WRPS-PER-2008-0427
SUB TASK HISTORY
No Subtasks
-- end of report --

Save

Problem Evaluation Request (PER)

WRPS-PER-2008-0433
Closed 01/05/2009 07:45

PER No	Date of Discovery	Time of Discovery (24:00)	Project
WRPS-PER-2008-0433	12/30/2008	09:20	Radcon-BO

Location

272AW

How Was Problem Discovered

Routine Work

Description of Concern or Problem

Work Order TFC-WO-08-0919 found air sampler (AS) 272AS043 (AS043) to be out of tolerance (OOT) by +19.1% for an approximate 40 cfm reading during its routine calibration performed on 12/11/2008. AS043 was found to read 45.7 cfm vice the rotometer indicated 37 cfm. Therefore, AS043 collected greater than the anticipated amount of air/radioactive particulates and could have over-estimated the actual airborne radioactive concentration present at the sample location.

Requirement Not Satisfied	Source Document Number

Equipment Identification Number	System Identification
272AS043	

Immediate actions Taken or Planned

AS043 was recalibrated and returned to service.
Base Ops RadCon management was notified.
An evaluation of the impact of the use of AS043 in an OOT condition was completed.
PER was initiated to document the OOT condition of ASXXX.

Recommended Corrective actions

Evaluation Performed:
The only AS043 OOT condition was the drawing of more air than indicated through the filter paper. This condition results in a conservative measure of the airborne radioactivity present at the work location. This conservative measure then results in either an overestimation of the airborne radioactivity and a subsequent conservative posting as an airborne radioactivity area or a conservative assignment of dose. Therefore, the OOT use of this air sampler does not meaningfully impact any air sample's MDC, DAC fraction, activity, or DL; no sample counting documentation changes are required, no field changes are required, and there is no impact on external/internal dosimetry records. No further evaluation is required or necessary at this time.

It is recommended that this PER be assigned to Base Ops RadCon as Trend Only.

Originator Contact

Please contact me if you have questions about this PER.

Originators Name	Originators ID	Originators Phone	Date Initiated
Bickel, Eric E	H3764153	(509) 372-1470	12/30/2008

SHIFT OPERATIONS REVIEW

Title

Air sampler out of tolerance

How Discovered	Agency
self-ID prior to event	

Reportability	SSC Operability	Operability Review	Comp Measures Req
Non-Reportable	N/A	N/A	

Describe actions Taken or Recommended

Forward PER to RadCon for resolution. No additional Base Ops Shift Office actions required at this time.

SO Reviewer Name	SO Reviewer ID	SO Reviewer Phone	SO Review Date
Johnson, Brian A	H0003531	(509) 373-2696	12/30/2008

SCREENING

PER Significance Level			
Trend Only			
Independent Assessment Review	**Occurrence Report Number**	**Externally Identified**	
No		No	
Assigned Responsible Manager	**Facilities Rep / SSO**	**Safety Management Rep**	
Brannan, Patrick (Brad)			
Program		**Safety Management Program**	
• N/A		• Radiological Control	
PER Screening Comments			
No comments (Nancy Brown 12/31/08)			
Causal Code			
MGT/Comm/Train	**Human Performance**	**GEMS**	**Equip/Eng/Other**
Failed Barrier	**ORPS Code**	**Functional Area**	**Work Process**
	Not Applicable	Radiation Protection	• Radiological Instrumentation
ISMS	**Consequence Code**		
Perform work within the controls	• Rad Inst - Calibration - Out of tolerances, pass due calibrations, traceability issues, training, problems with procedural processes		
PER Screening Chair	**PER Screening Chair ID**	**PER Screening Chair Phone**	**PER Screening Date**
Brown, Nancy L	H0088797	(509) 373-0992	12/31/2008
PAAA REVIEW			
PAAA Screening	**PAAA Codes**	**Function Codes**	
Not subject to PAAA			
NTS Report Number	**NTS Report Date**		
Repetitive / Recurrent	**Programmatic**	**Intentional Violation / Misrepresentation**	
No	No	No	
PAAA Screening Comments			
PAAA Reviewer Name	**PAAA Review Date**		
Anderson, Craig E	12/31/2008		
PAAA Approver Name	**PAAA Approve Date**		
Anderson, Craig E	01/05/2009		
SENIOR MANAGEMENT REVIEW/CONCURRENCE			
TF Operations Morning Leadership Call			
TF Operations Morning Leadership Call no longer required.			
Instructions for Responsible Manager			
Senior Management	**Sr Mgmt ID**	**Sr Mgmt Phone**	**Sr Mgmt Review Date**
Owen, Annette	H0054042	(509) 372-0533	12/31/2008
ATTACHMENTS			
Link to PER			

WRPS-PER-2008-0433 Support Docs.pdf		
AUDIT HISTORY		
Change Date	**Auditor**	**Comments**
12/31/2008 13:58	Brown, Nancy L	'PER Screening Comments' was changed.

-- End of Report --
01/07/2009 06:15 PM

Task# WRPS-PER-2008-0433			
E-STARS[R] Report Task Detail Report 01/07/2009 0615			
TASK INFORMATION			
Task#	WRPS-PER-2008-0433		
Subject	Trend; Air sampler out of tolerance		
Parent Task#		Status	CLOSED 01/05/2009
Reference		Due	01/01/2009
Originator	^PER Coordinator	Priority	Medium
Originator Phone		Category	PER
Origination Date	12/30/2008 1025	Generic1	None
Remote Task#		Generic2	None
Deliverable	PER Review	Generic3	None
Class	None	View Permissions	Global
Instructions	*No Instructions*		
ROUTING LISTS			
1	Review Initial PER		Inactive
	Review New PER		
	• ^SO(Johnson, Brian A) - Review - Concur - 12/30/2008 1141 *Instructions:*		
	• ^PER Screening(Brown, Nancy L) - Review - Concur - 12/31/2008 1336 *Instructions:*		
	• ^Mgr Review(Owen, Annette) - Review - Concur - 12/31/2008 1547 *Instructions:*		
ATTACHMENTS			
Attachments	1. Link to PER 2. WRPS-PER-2008-0433 Support Docs.pdf		
COLLABORATION			
COMMENTS			
No Comments			
TASK DUE DATE HISTORY			

Task# WRPS-PER-2008-0433			
Modified	12/30/2008 1025 - ^PER Coordinator	New Due Date	01/01/2009 1630
SUB TASK HISTORY			
No Subtasks			
-- end of report --			

WRPS - PER - 2008 - 0433
Support Doc's

Work Order: TFC-WO-08-0919

Title: 272-AW STAPLEX AIR SAMPLER CALS

Date Created: 7/23/08 15:13:25
WorkFlow: PM
WO Type: 2 - PREVENTIVE
State: Ready For Work
RAD Risk: Low
CACN: 502086
Priority: 4.2 Balance of Plant CM or Upgrades

Equipment: 272AS043 21738
Planner: Erbe, Bill
Assigned: Everett, Brian K
Phase Desig: BALANCE OF PLANT
Flow Status: OK
Project Id:

SC/I: ☐
Job Plan: ET-10544111
Farm/Facility: 272AW
PM Id: ET-105445
Frequency: 365
Date Reqd: 8/13/08 00:00:00
Route Id: SAC

Description:
GRAB AIR SAMPLER ANNUAL CALIBRATION
Determination of radiological concentration is required per Environmental Notification, TFC-ESHQ-ENV_FS-C-01

> 15% DOT
but AWS weight is
> than [illegible]
[illegible] sample [illegible]
no further action required -

Copy

Work Order: TFC-WO-08-0919

Title: 272-AW STAPLEX AIR SAMPLER CALS

Step 1 Of 1 **Step Id:** 001 **State:** Ready For Work **Safety Class:**

Sched Start: **Sched Comp:** **Related Step/Link:**

Step Instructions:

PERFORM CALIBRATION OF AIR SAMPLER PER PROCEDURE 6-RM-718

1. COMPLETE DATA TABLE AND GRAPH PER PROCEDURE

Assets

Seq	Asset Class	Asset Id	Asset Name	SC/I	Expiration Date
	M&TE	817-TE-02-C23	Temp Probe	☐	11-Sep-09
	M&TE	8K-17-TE-006	Temp DCI	☐	23-Oct-09
	M&TE	817-08-09-011	Smart Manometer	☐	7-16-09
	M&TE	817-05-MD-006	Dwyer	☐	5-19-09
	Equipment	272AS043 21738	STAPLEX AIR SAMPLER	☐	

Trades

Crew	Trade Id:	Trade Description:	Workers	Act Hrs.	Delay Code
	T070	Instrument & Control Techs	2	4	

Attachments: There are 4 document(s) attached to this work order

Description	Path/Name
Header Attachment	
Data Sheet 6-RM-718_882076.doc	Data Sheet 6-RM-718_882076__930885__980100.doc
Technical Justification and Change Log .doc	Technical Justification and Change Log __842391__842426__842435__842
RWP TF-001	__980098.F-SJHA-0407
Proc- 6-RM-718	http://idmsweb/idmsprod/livelink.exe?func=ll&objId=13006508&objAction=Op

Electronic Approvals:

Date	State	Response	Profile	Name	Role
7/23/08 15:13:40	In Planning	Approved	ret_&_bo_pm_planner	Erbe, Bill	
7/31/08 09:40:54	Ready For Work	Approved	ret_&_bo_pm_planner	Erbe, Bill	

Copy

FWC

FWS Completed By: L. Elkins **FWC Date:** 12-11-08 **Update Job Plan (Y/N):**

Completed Satisfactorily(yes,no): y **Asset Condition:**

Comments:

718-TE Staplex Kit 1-Apr-09

820-47-08-002 Stopwatch 17-Jun-09

820-GW-08-001 Wire Set 1-Jul-09

Staplex High Volume Air Sampler Calibration Worksheet

Note: All Calculated values are to be taken out to (4) places, using the 5th digit to round up if needed.

As-Found Depth 0.251 (0.234" to 0.266") Slit 0.072 (0.062" to 0.089") **Staplex Air Sampler S/N** 217387

AS-Left Depth 0.251 (0.234" to 0.266") Slit 0.072 (0.062" to 0.089") **Calibration Kit Number** 710730

1	2	3	4	5	6	7
Orifice Plate Number	ΔH "H_2O	I	ΔH_{STD} "H_2O Formula $\sqrt{\Delta H\,(P_2/P_{STD})\,(T_{STD}/T_2)}$	Observed STD Flow Meter Reading Formula $Q_{STD} = I\sqrt{(P_2/P_{STD})\,(T_{STD}/T_2)}$	Q_{STD} True Air Flow	
					M^3/Min.	CFM
#12	6.363	52	2.8933	52.0260	1.6120	56.9275
#11	7.805	50	2.7951	50.0250	1.5550	54.9175
#10	6.898	47	2.6277	47.0235	1.4575	51.5082
#9	6.087	43	2.4654	43.0215	1.3654	48.2191
#7	4.619	37	2.1503	37.0155	1.1505	41.7000
#6	3.479	32	1.8661	32.0160	1.0154	35.5265

Previous Calibration Values: m_2 = .9432 Intercept b_2 = -2.9439 P_2/P_{STD} = 756.5435 / 760 = .9955

Orifice Calibrator Q_{STD} slope m_1 = 1.7233 Intercept b_1 = .1154 T_{STD}/T_2 = 298.16 / 296.6044 = 1.0052

Barometric Pressure: 29.797 "Hg; (To Convert "Hg x 2.54 cm/in. x 10 mm/cm = mmHg).

P_2 = 756.5435 mmHg (Where P_{STD} = 760 mmHg) $(P_2/P_{STD})(T_{STD}/T_2)$ = (.9955)(1.0052) = 1.0010

Ambient Temp: 74.2 °F (To Convert °F – 32 x 5/9 = °C + 273.16 = °K).

T_2 = 296.6044 °K (Where T_{STD} = 298.16 °K) $\sqrt{(P_2/P_{STD})(T_{STD}/T_2)}$ = 1.0005

Rotameter As-Found 37 CFM (Calculated) As-Left 44.534 CFM Adjusted Rotameter to 40 CFM ✓ YES ___ NO

As-Found True Air Flow 45.1420 CFM Rotometer As-Left 44 CFM

% Error = (As-Found True Air Flow) - (Rotometer As-Found) / (As-Found True Air Flow) x 100 = 19.1115% (Tolerance +/- 10%) >15% OOT

But Rotameter > than indication; Air is OK (Use Standard Line)

L.E. Neuquist L.E. Neuquist / 12-11-08
Craftsman Print/Signature Date

Field Work Supervisor Print/Signature / Date

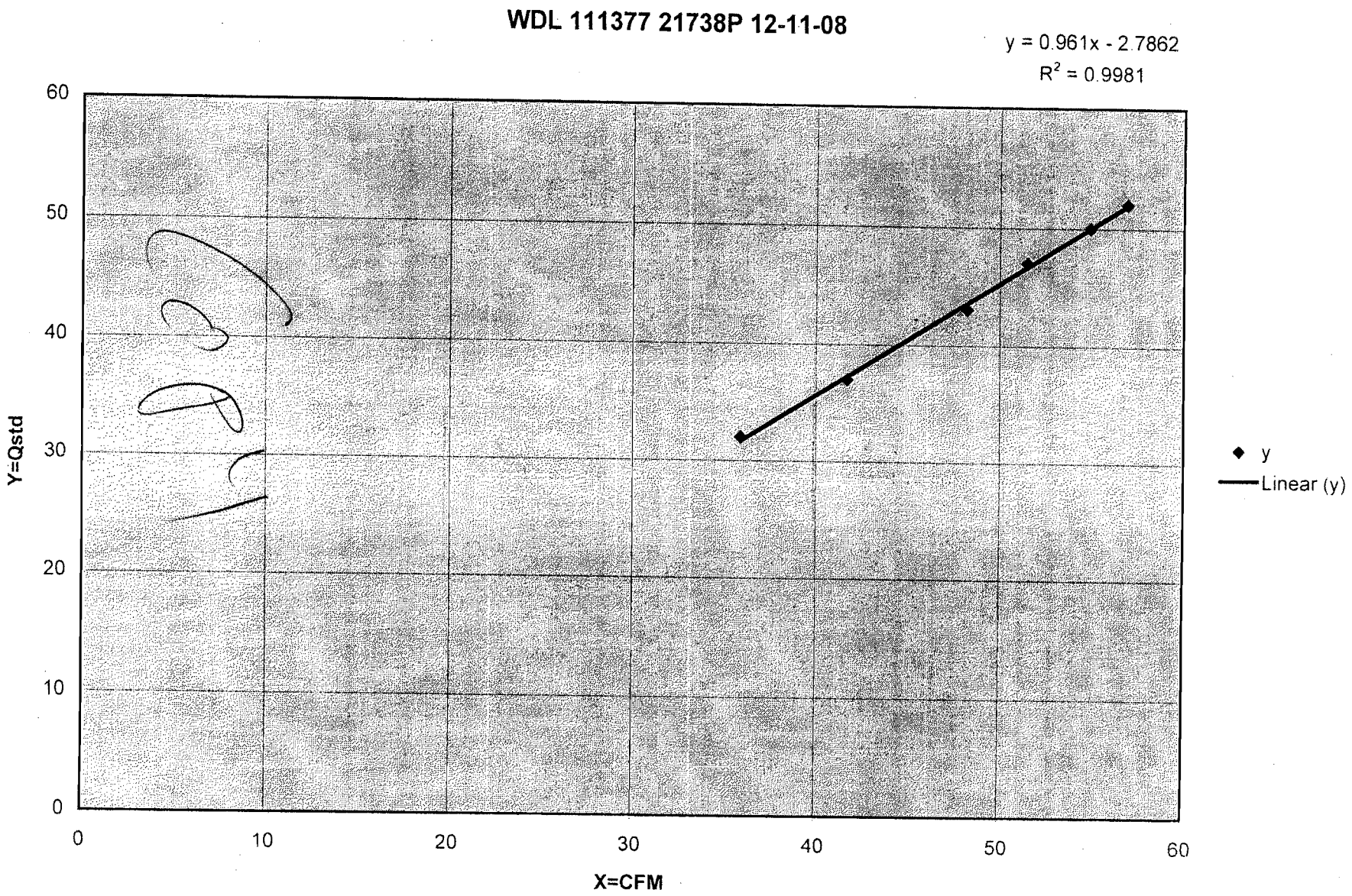
WDL 111377 21738P 12-11-08
y = 0.961x - 2.7862
R² = 0.9981
Y=Qstd
X=CFM
0
10
20
30
40
50
60
y
Linear (y)

x	y
56.9278	52.026
54.9148	50.025
51.4822	47.0235
48.2191	37.0185
35.8765	32.016

Copy

Save

Problem Evaluation Request (PER)

WRPS-PER-2008-0434
Closed 01/05/2009 07:45

PER No	Date of Discovery	Time of Discovery (24:00)	Project
WRPS-PER-2008-0434	12/30/2008	11:50	Radcon-BO

Location

272AW

How Was Problem Discovered

Routine Work

Description of Concern or Problem

Work Order TFC-WO-08-0922 found air sampler (AS) 272AS039 (AS039) to be out of tolerance (OOT) by 14% for an approximate 40 cfm reading during its routine calibration performed on 12/8/2008 AS039 was found to read 42.9 cfm vice the rotometer indicated 37 cfm. Therefore, AS039 collected greater than the anticipated amount of air/radioactive particulates and could have over-estimated the actual airborne radioactive concentration present at the sample location.

Requirement Not Satisfied	Source Document Number

Equipment Identification Number	System Identification
272AW039	

Immediate actions Taken or Planned

AS039X was recalibrated and returned to service.
Base Ops RadCon management was notified.
An evaluation of the impact of the use of AS039 in an OOT condition was completed.
PER was initiated to document the OOT condition of AS039.

Recommended Corrective actions

Evaluation Performed:
The AS039 as found values as indicated on the supplied calibration documentation were greater than +/- 10% of the conventionally true value (CTV) and reported to RadCon as required by INS-P-05. The as found values were within +/- 15% of the CTV; HNF-5183, article 555.5 requires that air samplers be calibrated to +/- 15% of the CTV. Therefore, if the air sampler as found value is between +/- 10 to 15% of the CTV, no requirements have been exceeded.

As the air sampler as found values were between +/- 10 to 15% of the CTV, no further actions are necessary.

It is recommended that this PER be assigned to Base Ops RadCon as Trend Only.

Originator Contact

Please contact me if you have further questions.

Originators Name	Originators ID	Originators Phone	Date Initiated
Bickel, Eric E	H3764153	(509) 372-1470	12/30/2008

SHIFT OPERATIONS REVIEW

Title

Air sampler out of tolerance

How Discovered	Agency
self-ID prior to event	

Reportability	SSC Operability	Operability Review	Comp Measures Req
Non-Reportable	N/A	N/A	

Describe actions Taken or Recommended

Forward PER to RadCon for resolution. No additional Base Ops Shift Office actions required at this time.

SO Reviewer Name	SO Reviewer ID	SO Reviewer Phone	SO Review Date
Johnson, Brian A	H0003531	(509) 373-2696	12/30/2008

SCREENING

PER Significance Level	

Trend Only			
Independent Assessment Review	**Occurrence Report Number**	**Externally Identified**	
No		No	
Assigned Responsible Manager	**Facilities Rep / SSO**	**Safety Management Rep**	
Brannan, Patrick (Brad)			
Program		**Safety Management Program**	
• N/A		• Radiological Control	
PER Screening Comments			
No comments (Nancy Brown 12/31/08)			
Causal Code			
MGT/Comm/Train	**Human Performance**	**GEMS**	**Equip/Eng/Other**
Failed Barrier	**ORPS Code**	**Functional Area**	**Work Process**
	Not Applicable	Radiation Protection	• Radiological Instrumentation
ISMS	**Consequence Code**		
Perform work within the controls	• Rad Inst - Calibration - Out of tolerances, pass due calibrations, traceability issues, training, problems with procedural processes		
PER Screening Chair	**PER Screening Chair ID**	**PER Screening Chair Phone**	**PER Screening Date**
Brown, Nancy L	H0088797	(509) 373-0992	12/31/2008
PAAA REVIEW			
PAAA Screening	**PAAA Codes**	**Function Codes**	
Not subject to PAAA			
NTS Report Number	**NTS Report Date**		
Repetitive / Recurrent	**Programmatic**	**Intentional Violation / Misrepresentation**	
No	No	No	
PAAA Screening Comments			
PAAA Reviewer Name	**PAAA Review Date**		
Anderson, Craig E	12/31/2008		
PAAA Approver Name	**PAAA Approve Date**		
Anderson, Craig E	01/05/2009		
SENIOR MANAGEMENT REVIEW/CONCURRENCE			
TF Operations Morning Leadership Call			
TF Operations Morning Leadership Call no longer required.			
Instructions for Responsible Manager			
Senior Management	**Sr Mgmt ID**	**Sr Mgmt Phone**	**Sr Mgmt Review Date**
Owen, Annette	H0054042	(509) 372-0533	12/31/2008
ATTACHMENTS			

Link to PER		
WRPS-PER-2008-0434 Support Docs.pdf		
AUDIT HISTORY		
Change Date	**Auditor**	**Comments**
12/31/2008 13:59	Brown, Nancy L	'PER Screening Comments' was changed.

-- End of Report --
01/07/2009 06:15 PM

Task# WRPS-PER-2008-0434			
E-STARS[R] Report Task Detail Report 01/07/2009 0615			
TASK INFORMATION			
Task#	WRPS-PER-2008-0434		
Subject	Trend; Air sampler out of tolerance		
Parent Task#		Status	CLOSED 01/05/2009
Reference		Due	01/01/2009
Originator	^PER Coordinator	Priority	Medium
Originator Phone		Category	PER
Origination Date	12/30/2008 1205	Generic1	None
Remote Task#		Generic2	None
Deliverable	PER Review	Generic3	None
Class	None	View Permissions	Global
Instructions	*No Instructions*		
ROUTING LISTS			
1	Review Initial PER		Inactive
	Review New PER		
	• ^SO(Johnson, Brian A) - Review - Concur - 12/30/2008 1208 *Instructions:*		
	• ^PER Screening(Brown, Nancy L) - Review - Concur - 12/31/2008 1339 *Instructions:*		
	• ^Mgr Review(Owen, Annette) - Review - Concur - 12/31/2008 1548 *Instructions:*		
ATTACHMENTS			
Attachments	1. Link to PER 2. WRPS-PER-2008-0434 Support Docs.pdf		
COLLABORATION			
COMMENTS			
No Comments			
TASK DUE DATE HISTORY			

Task# WRPS-PER-2008-0434			
Modified	12/30/2008 1205 - ^PER Coordinator	New Due Date	01/01/2009 1630
SUB TASK HISTORY			
No Subtasks			
-- end of report --			

WRPS PCN 2008-0434
Support Docs

Work Order: TFC-WO-08-0922

Title: 272-AW STAPLEX AIR SAMPLER CALS

Date Created: 7/23/08 15:14:17
WorkFlow: PM
WO Type: 2 - PREVENTIVE
State: Ready For Work
RAD Risk: Low
CACN: 502086
Priority: 4.2 Balance of Plant CM or Upgrades

Equipment: 272AS039 21735P
Planner: Erbe, Bill
Assigned: Everett, Brian K
Phase Desig: BALANCE OF PLANT
Flow Status: OK
Project Id:

SC/I: ☐
Job Plan: ET-105440
Farm/Facility: 272AW
PM Id: ET-105440
Frequency: 365
Date Reqd: 8/15/08 00:00:00
Route Id: SAC

Description:
GRAB AIR SAMPLER ANNUAL CALIBRATION
Determination of radiological concentration is required per Environmental Notification, TFC-ESHQ-ENV_FS-C-01

710% bal 15%
is not a concern for
~~the~~ TFRCM

Work Order: TFC-WO-08-0922

Title: 272-AW STAPLEX AIR SAMPLER CALS

Step 1 Of 1 Step Id: 001 State: Ready For Work Safety Class:

Sched Start: Sched Comp: Related Step/Link:

Step Instructions:

PERFORM CALIBRATION OF AIR SAMPLER PER PROCEDURE 6-RM-718.

1. COMPLETE DATA TABLE AND GRAPH PER PROCEDURE

Assets

Seq	Asset Class	Asset Id	Asset Name	SC/I	Expiration Date
	M&TE	817-28-09-011	SMART TY MANOMETER	☐	7-10-09
	M&TE	817-32-00-076	DRUCK	☐	5-19-09
	M&TE	817-28-02-001	TC PROBE	☐	11-OCT-09
	M&TE	817-13-70-008	FLUKE	☐	23-OCT-09
	Equipment	272AS039 21735P	STAPLEX AIR SAMPLER	☐	

Trades

Crew	Trade Id:	Trade Description:	Workers	Act Hrs.	Delay Code
	T070	Instrument & Control Techs	1		

Attachments: There are 4 document(s) attached to this work order

Description	Path/Name
Header Attachment	
Data Sheet 6-RM-718_882076.doc	Data Sheet 6-RM-718_882076__930886__980112.doc
Technical Justification and Change Log .doc	Technical Justification and Change Log __842391__842421__980109.doc
RWP TF-001	__980110.F-SJHA-0001
Proc- 6-RM-718	http://idmsweb/idmsprod/livelink.exe?func=ll&objId=13006508&objAction=Op

Electronic Approvals:

Date	State	Response	Profile	Name	Role
7/23/08 15:14:33	In Planning	Approved	ret_&_bo_pm_planner	Erbe, Bill	
7/31/08 09:44:17	Ready For Work	Approved	ret_&_bo_pm_planner	Erbe, Bill	

FWC

FWS Completed By: [signature] FWC Date: 12-8-08 Update Job Plan (Y/N):

Completed Satisfactorily(yes,no): Y Asset Condition:

Comments:

820-82-80-001 WICE OXIDE 1-JUL-09
820-49-08-002 STANDARD 17-JUL-09
710750 CALIB. KIT 1 APR-09

Staplex High Volume Air Sampler Calibration Worksheet

Note: All Calculated values are to be taken out to (4) places, using the 5th digit to round up if needed.

As-Found Depth 0.249 (0.234" to 0.266") Slit 0.72 (0.062" to 0.089") **Staplex Air Sampler S/N** [illegible]

AS-Left Depth 0.249 (0.234" to 0.266") Slit 0.72 (0.062" to 0.089") **Calibration Kit Number** 710730

1	2	3	4	5	6	7
Orifice Plate Number	ΔH "H_2O	I	ΔH_{STD} "H_2O Formula $\sqrt{\Delta H\,(P_2/P_{STD})\,(T_{STD}/T_2)}$	Observed STD Flow Meter Reading Formula $Q_{STD} = I\sqrt{(P_2/P_{STD})\,(T_{STD}/T_2)}$	Q_{STD} True Air Flow	
					M^3/Min.	CFM
#12	7.843	52	2.7847	51.7036	1.5484	54.6424
#11	7.185	50	2.6653	49.715	1.4797	52.2556
#10	6.327	47	2.5211	46.4689	1.3844	48.8460
#9	5.553	44	2.3431	43.7492	1.2929	46.6588
#7	3.963	37	1.9794	31.8176	1.0816	35.9754
#6	3.154	28	1.7659	27.8484	.9578	33.8247

Previous Calibration Values: m_2 = 0.8992 Intercept b_2 = +1.4593 P_2/P_{STD} = $\frac{747.963}{760}$ = .9841

Orifice Calibrator Q_{STD} slope m_1 = 1.7233 Intercept b_1 = .1154 T_{STD}/T_2 = $\frac{298.16}{296.7711}$ = 1.0047

Barometric Pressure: 29.445 "Hg; (To Convert "Hg x 2.54 cm/in. x 10 mm/cm = mmHg).

P_2 = 747.963 mmHg (Where P_{STD} = 760 mmHg) $(P_2/P_{STD})(T_{STD}/T_2)$ = (.9841)(1.0047) = .9887

Ambient Temp: 74.5 °F (To Convert °F – 32 x 5/9 = °C + 273.16 = °K).

T_2 = 296.7711 °K (Where T_{STD} = 298.16 °K) $\sqrt{(P_2/P_{STD})(T_{STD}/T_2)}$ = .9943

Rotameter As-Found 37 CFM (Calculated) As-Left 43.5276 CFM Adjusted Rotameter to 40 CFM ✓ YES ___ NO

As-Found True Air Flow 42.9575 CFM Rotometer As-Left 43 CFM

% Error $\frac{\text{(As-Found True Air Flow) – (Rotometer As-Found)}}{\text{(As-Found True Air Flow)}}$ x 100 = 13.8563 (Tolerance +/- 10%) <15% OOT ∴ not A concern for THIS

[illegible] / 12-8-08
Craftsman Print/Signature Date

Field Work Supervisor Print/Signature / Date

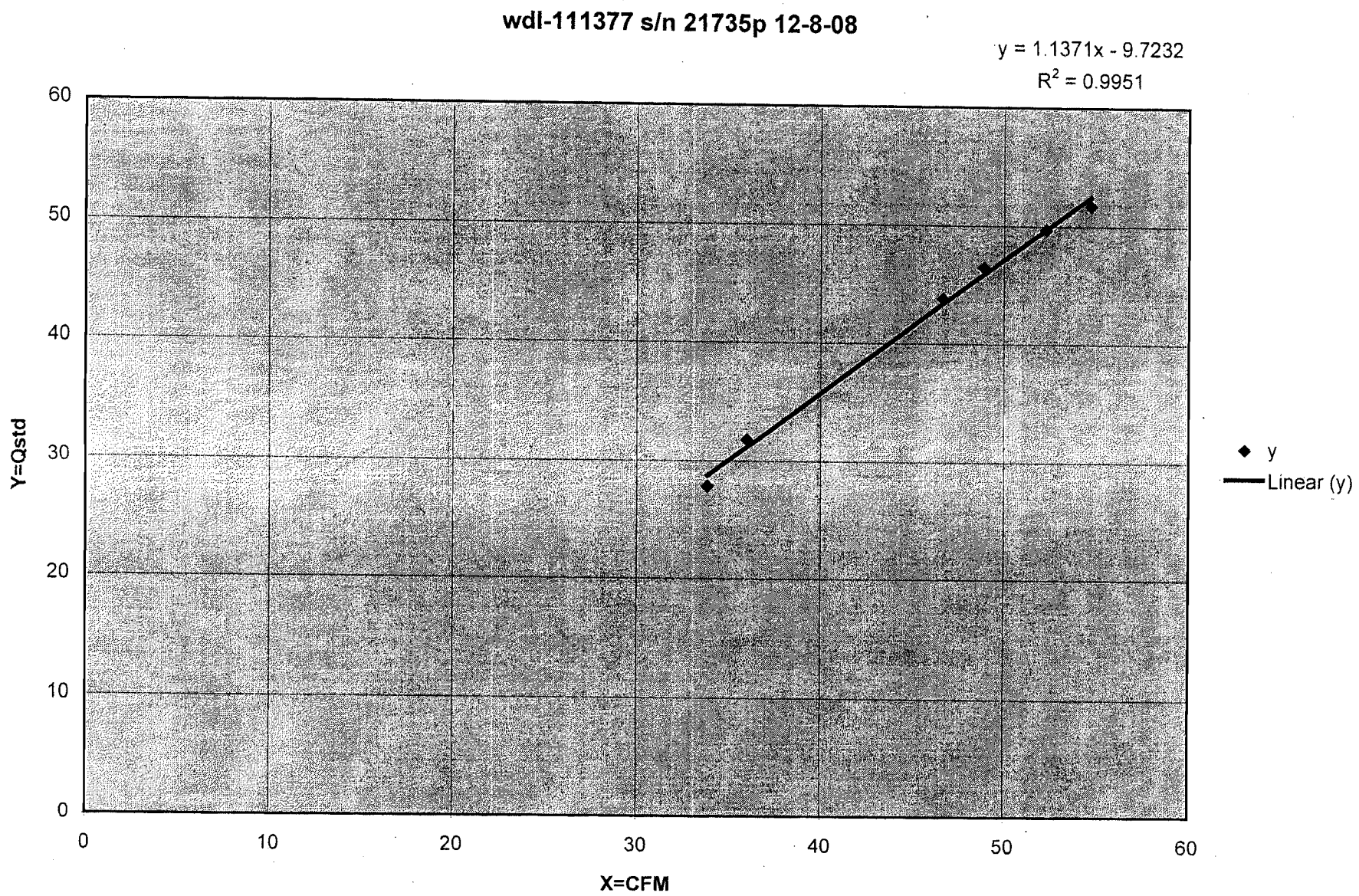
wdl-111377 s/n 21735p 12-8-08
y = 1.1371x - 9.7232
R² = 0.9951
Y=Qstd
X=CFM
0
10
20
30
40
50
60
y
Linear (y)

Save

Problem Evaluation Request (PER)

WRPS-PER-2009-0008
Closed 02/23/2009 15:15

PER No	Date of Discovery	Time of Discovery (24:00)	Project
WRPS-PER-2009-0008	01/05/2009	13:00	S&H

Location

All Tank Farms

How Was Problem Discovered

Assessment

Description of Concern or Problem

During the months of October and November 2008, the U. S. Department of Energy (DOE) Office of River Protection (ORP) conducted an assessment of the Washington River Protection Solutions LLC (WRPS) Radiological Source Control Program. The assessment report (see attached CORR-2008-0032), contains one finding, two non-cited findings, and four observations.

"Finding A-08-ESQ-TANKFARM-010-F01: Radiological posting requirements, preapproved routes, and radiological survey measurement requirements for the accountable Liquid Observation Well (LOW) neutron source are not implemented in procedure TO-040-333, "Liquid Observation Well Surveillance Van Startup and Operation Procedure," Revision E-2. Note: This issue is similar to a contributing factor in NTS-RP—CHG-TANKFARM-2005-005, "Improper Controls Associated with Use of Neutron Test Source" [see PER-2005-1000]." (See attached report for complete discussion of the finding).

This finding encompasses 3 issues. Issue #3 concerns radiological shipping of the LOW source. As stated in the assessment report, "...HNF-5183, Tank Farm Radiological Control Manual (TFRCM) Article 423.4 requires, "On-site transfers over nonpublic thoroughfares or between facilities on the same site shall [835.104] be performed in accordance with written procedures utilizing pre-approved routes [RPP #39]." Review of the LOW procedure and the Onsite Routine Radioactive Shipment Record (ORRSR No. WRPS-200A-12-SRC) found no pre-approved routes identified."

(Reference PER WRPS-PER-2008-0381 for the RADCON portion)

Requirement Not Satisfied	Source Document Number
TFRCM HNF-5183, Article 423	A-08-ESQ-TANKFARM-010
Equipment Identification Number	**System Identification**
N/A	

Immediate actions Taken or Planned

None

Recommended Corrective actions

1. Ensure shipping practices and procedures capture the requirements of TFRCM HNF-5183, Article 423, Transportation of Radioactive Material
2. Define or establish pre-approved shipment routes are identified for all ORRSRs

Originator Contact

I would like to help define the problem

Originators Name	Originators ID	Originators Phone	Date Initiated
Rolph, Jim T	H0034314	(509) 376-7686	01/05/2009

SHIFT OPERATIONS REVIEW

Title

DOE ORP Assessment Finding evaluation identified issue with LOW Source Shippment

How Discovered	Agency
self-ID result of event	

Reportability	SSC Operability	Operability Review	Comp Measures Req
Non-Reportable	N/A	N/A	

Describe actions Taken or Recommended

No additional actions taken or recommended by the Base Operations Shift Office.

SO Reviewer Name	SO Reviewer ID	SO Reviewer Phone	SO Review Date
Higham, Dale B	H0078950	(509) 373-2689	01/05/2009

SCREENING

PER Significance Level			
PER with Resolution			
Independent Assessment Review	**Occurrence Report Number**	**Externally Identified**	
No		No	
Assigned Responsible Manager	**Facilities Rep / SSO**	**Safety Management Rep**	
Nielsen, Judith A			
Program		**Safety Management Program**	
• N/A		• Environmental Management	
PER Screening Comments			
PER w/ Res with informal Apparent Cause Analysis. Please attach referenced assessment (Nancy Brown 01/06/09)			
Causal Code			
A5B2C05	Communications LTA Written Communications Content LTA Ambiguous instructions/requirements		
A5B2C08	Communications LTA Written Communications Content LTA Incomplete/situation not covered		
MGT/Comm/Train	**Human Performance**	**GEMS**	**Equip/Eng/Other**
Failed Barrier	**ORPS Code**	**Functional Area**	**Work Process**
	Not Applicable	Radiation Protection	• Transportation Safety
ISMS	**Consequence Code**		
Perform work within the controls	• Radiological Program Requirement - Problems identifed related to the requriments of the Radiological Program.		
PER Screening Chair	**PER Screening Chair ID**	**PER Screening Chair Phone**	**PER Screening Date**
Brown, Nancy L	H0088797	(509) 373-0992	01/06/2009
PAAA REVIEW			
PAAA Screening	**PAAA Codes**	**Function Codes**	
PAAA, Non-NTS Reportable	• 10 CFR 835.104	• Procedure Quality	
NTS Report Number	**NTS Report Date**		
Repetitive / Recurrent	**Programmatic**	**Intentional Violation / Misrepresentation**	
No	No	No	
PAAA Screening Comments			
PAAA Reviewer Name	**PAAA Review Date**		
Anderson, Craig E	01/06/2009		
PAAA Approver Name	**PAAA Approve Date**		
Anderson, Craig E	01/07/2009		
SENIOR MANAGEMENT REVIEW/CONCURRENCE			
TF Operations Morning Leadership Call			
TF Operations Morning Leadership Call is no longer required.			
Instructions for Responsible Manager			

Review the PER Screening Tab and Senior Manager Review for requested data. Complete the task in E-STARS in accordance with TFC-ESHQ-Q_C-C-01, and TFC-ESHQ-Q_ADM-C-12 Apparent Cause Analysis & Corrective Action Planning.

Senior Management	Sr Mgmt ID	Sr Mgmt Phone	Sr Mgmt Review Date
Owen, Annette	H0054042	(509) 372-0533	01/07/2009

CAUSE ANALYSIS

Description of Occurrence

The issue concerns radiological shipping of the LOW source. As stated in the assessment report, "...HNF-5183, Tank Farm Radiological Control Manual (TFRCM) Article 423.4 requires, "On-site transfers over nonpublic thoroughfares or between facilities on the same site shall [835.104] be performed in accordance with written procedures utilizing pre-approved routes [RPP #39]." Review of the LOW procedure and the Onsite Routine Radioactive Shipment Record (ORRSR No. WRPS-200A-12-SRC) found no pre-approved routes identified."

(Reference PER WRPS-PER-2008-0381 for the RADCON portion)

Extent of Condition

A search of the PER data revealed no similar or related events.

Safety Significance

The authorized shippers were aware of the approved transfer route requirements in the TSD. The TSD describes the approved routes as primary or secondary roads on the Hanford site. The routes were used when shipping the LOW source on site. There was no safety significance attributed to these shipments.

Generic Implications

Remedial Corrective Action

The ORRSR was reissued with defined transfer routes as defined in the Hanford Site Transportation Safety Document (TSD) , DOE/RL-2001 0036 on1/19/09. The applicable TSD Section 3.4," Primary Onsite Transport Routes" is attached.

Causal Analysis, Apparent Cause and/or Root Cause Analysis

Problem Statement: The onsite shipping procedure and ORRSRs did not contain the approved onsite transfer routes as required by the TFRCM.

Why? The transportation organization was not aware of the TFRCM requirements to identify onsite transportation routes in the transportation procedures and ORRSRs.

Why? The TFRCM requirement was not communicated to the transportation organization.

CORRECTIVE ACTIONS

Actionee	Action Due Date	E-STARS Number
Nielsen, Judith A	02/27/2009	WRPS-PER-2009-0008.1

Action

The Onsite Shipment procedure TFC-OPS-WM-C-019 will be updated to:
1. Include the reference to the Hanford Sitewide Transportation Safety Document (TSD) DOE-RL-2001-0036)reference with defined transfer routes.
2. The ORRSRs were revised to include the route and route reference to the Hanford Site TSD.

Corrective Action Attachments

- 0802829_08-ESQ-303_WRPS - [0812110773][1].pdf
- Link to PER
- RE_ WRPS-PER-2009-0008.msg
- TFC-OPS-WM-C-19,_Onsite_Hazardous_Material_Shipments.doc
- TSD route plan list.pdf

ATTACHMENTS

0802829_08-ESQ-303_WRPS - [0812110773][1].pdf

Link to PER
RE_ WRPS-PER-2009-0008.msg
TSD route plan list.pdf

AUDIT HISTORY

Change Date	Auditor	Comments
01/07/2009 07:55	Owen, Annette	Responsible Manager Task Launched by Owen, Annette
01/07/2009 16:12	Brown, Nancy L	'Screening Safety Managemnt Program' was changed. 'Assigned Responsible Manager' was changed. 'Functional Area' was changed. 'Selected Work Processes' have changed.
02/23/2009 10:41	Glaman, Linda R	'PER Title' was changed. 'How Discovered' was changed. Confirmed with originator that this PER was a result of the evaluation of the finding by ORP, not identified as part of the finding by ORP. L Glaman
02/23/2009 10:42	Glaman, Linda R	'Externally Identified' was changed. Confirmed with originator that this PER was a result of the evaluation of the ORP finding, not part of the ORP finding. L Glaman
02/23/2009 10:46	Glaman, Linda R	Change to Cause Analysis screen/Corrective Action plan.
02/23/2009 10:46	Glaman, Linda R	Corrective actions Launched by Glaman, Linda R

-- End of Report --
02/23/2009 03:15 PM

Task# WRPS-PER-2009-0008			
E-STARS[R] Report Task Detail Report 02/23/2009 0315			
TASK INFORMATION			
Task#	WRPS-PER-2009-0008		
Subject	RES; DOE ORP Assessment Finding - LOW Source Shippment		
Parent Task#		Status	CLOSED 02/23/2009
Reference		Due	03/05/2009
Originator	^PER Coordinator	Priority	Medium
Originator Phone		Category	PER
Origination Date	01/05/2009 1402	Generic1	None
Remote Task#		Generic2	None
Deliverable	PER Review	Generic3	None
Class	None	View Permissions	Global
Instructions	*No Instructions*		
ROUTING LISTS			
1	Corrective actions Routing Lis		Inactive
	To launch Corrective actions.		
	• ^PER CAs(Owen, Annette) - Assign - Completed - 02/23/2009 1503 *Instructions:*		
2	Responsible Manager		Inactive
	Review the PER Screening Tab and Senior Manager Review for requested data. Complete the task in E-STARS in accordance with TFC-ESHQ-Q_C-C-01, and TFC-ESHQ-Q_ADM-C-12 Apparent Cause Analysis & Corrective Action Planning.		
	• Rolph, Jim T - Assign - Withdrawn - 01/07/2009 1608 *Instructions:*		
	• Rolph, Jim T - Assign - Withdrawn - 01/07/2009 1608 *Instructions:* Did you contact the originator about the PER? Document your contact in the response window.		
	• Nielsen, Judith A - Assign - Completed with comments - 02/19/2009 0648 *Instructions:*		
	• Nielsen, Judith A - Assign - Completed with comments - 02/19/2009 0650 *Instructions:*		
3	Review Initial PER		Inactive

Task# WRPS-PER-2009-0008			
	Review New PER		
	• ^SO(Higham, Dale B) - Review - Concur - 01/05/2009 1831 *Instructions:*		
	• ^PER Screening(Brown, Nancy L) - Review - Concur - 01/06/2009 1347 *Instructions:*		
	• ^Mgr Review(Owen, Annette) - Review - Concur - 01/07/2009 0755 *Instructions:*		
ATTACHMENTS			
Attachments	1. 0802829_08-ESQ-303_WRPS - [0812110773][1].pdf 2. Link to PER 3. RE_ WRPS-PER-2009-0008.msg 4. TSD route plan list.pdf		
COLLABORATION			
COMMENTS			
Poster	Nielsen, Judith A (Erickson, Janice l (Jan)) - 02/19/2009 0602		
	Completed		
	Our CAP response was separate from this PER. WRPS-PER-2008-0381 captured the findings from the surveillance and the PER we initiated was a result of identification of additional related issues discovered while developing the CAP. Jim Rolph Procedures were updated to include transport routes. This action is closed.		
Poster	Nielsen, Judith A (Erickson, Janice l (Jan)) - 02/19/2009 0602		
	Completed		
	Transportation procedure was updated to include transport routes. This action is complete.		
Poster	^PER Coordinator (Owen, Annette) - 02/23/2009 0302		
	CLOSED		
	All Corrective Actions closed.		
TASK DUE DATE HISTORY			
Modified	02/23/2009 1046 - ^PER Coordinator	New Due Date	03/05/2009 0000
Modified	01/07/2009 0755 - ^PER Coordinator	New Due Date	02/19/2009 1630
Modified	01/07/2009 0755 - ^PER Coordinator	New Due Date	02/19/2009 1630
Modified	01/05/2009 1402 - ^PER Coordinator	New Due Date	01/07/2009 1630

Task# WRPS-PER-2009-0008		
SUB TASK HISTORY		
Subtask#	WRPS-PER-2009-0008.1	
Subject	WRPS-PER-2009-0008; RES; The Onsite Shipment procedure TFC-OPS-WM-C-019 will be updated to: 1. Include the reference to the Hanford Sitewide Transpo	
Originator	^PER CAs	
	Routing List	*No Active Routing List*
-- end of report --		

3.4 PRIMARY ONSITE TRANSPORT ROUTES

Transportation routes are generally specified for each onsite packaging system in the onsite PSSD. When routes are not specified, it is expected that shipments will be executed using the most direct route on principal site roadways. Back roads, unimproved roads, and shortcuts are not to be used unless specifically authorized in the onsite PSSD, transportation plan, project plan, health and safety plan, or are required by the activity, or other improved routes are not available.

The most common routes for transporting hazardous materials, substances, and wastes are as follows:

- 1100 Area to 300 Area: Take Route 4S north to 300 Area
- 1100 Area to 400 Area: Take Route 4S north to 400 Area
- 1100 Area to 200E: Take Route 4S north to 200E Area
- 1100 Area to 200W: Take Route 4S north to Route 3, then west to 200W Area

- 300 Area to 1100 Area: Take Route 4S south to 1100 Area
- 300 Area to 200W Area: Take Route 4S north to Route 3, then west to 200W Area

- 200E Area to 200W Area: Take Route 3 west to 200W Area
- 200E Area to 300 Area: Take Route 4S to 300 Area
- 200E Area to 1100 Area: Take Route 4S south to 1100 Area

- 200W Area to 200E Area: Take Route 3 east to 200E Area
- 200W Area to 300 Area: Take Route 3 east to Route 4S, then south to 300 Area
- 200W Area to 1100 Area: Take Route 3 east to Route 4S, then south to 1100 Area

- 100 Areas to 200E Area: As appropriate, take Route 1 or Route 2N to Route 4N, then turn south on Route 4N to Route 3, then turn east into 200E Area

- 100 Areas to 200W: As appropriate, take Route 1 or Route 2N to Route 4N, then turn south on Route 4N to Route 3, then turn west to 200W Area

- 100 Areas to 1100 Area: As appropriate, take Route 1 or Route 2N to Route 4N, then turn south onto Route 4N. Route 4N turns into Route 4S. Follow Route 4S to 1100 Area.

INCOMING CORRESPONDENCE COVERSHEET

CORR-2008-0032

Author	Addressee	Correspondence No.
J. C. Poniatowski/ORP	J. M. Armstead/WRPS	0802829 DOE-ORP: 08-ESQ-303

Subject: CONTRACT NO. DE-AC27-08RV14800 – RADIOLOGICAL SOURCE CONTROL ASSESSMENT A-08-ESQ-TANKFARM-010

DISTRIBUTION

Washington River Protection Solutions
WRPS Correspondence Control
JC Allen-Floyd
JM Armstead
F Beranek ((Assignee))
HS Berman
MN Brosee
GJ Johnson
WJ Johnson
MA Lindholm
JT Rolph
KJ Rueter
SM Sax
JM Shelt
BR Thomas

Priority:	**NORMAL**
Assignee:	F. Beranek
Received:	December 11, 2008
Due Date:	1/11/2008 – Respond to the assessment finding and observations as requested by ORP.

WRPS Correspondence Control
For Questions call: 376-0271
Outlook Address: ^**WRPS Correspondence Control**

U.S. Department of Energy
Office of River Protection
P.O. Box 450, MSIN H6-60
Richland, Washington 99352

DEC 10 2008

08-ESQ-303

0802829

Mr. Mike Armstead
Procurement Contracts Manager
Washington River Protection Solutions LLC
2440 Stevens Center Place
Richland, Washington 99354

Dear Mr. Armstead:

CONTRACT NO. DE-AC27-08RV14800 – RADIOLOGICAL SOURCE CONTROL ASSESSMENT A-08-ESQ-TANKFARM-010

This letter forwards the results of an assessment the U.S. Department of Energy, Office of River Protection (ORP) conducted from October 8 through November 5, 2008, to evaluate the Washington River Protection Solutions LLC (WRPS) Radiological Source Control Program (the Program). The assessment team evaluated applicable procedures, examined records, made field observations, and conducted interviews of staff members who manage and implement the program to determine the adequacy and effectiveness of the Program since the last ORP assessment in May 2006. Details of the assessment are attached.

In general, the assessment team found the WRPS radiological source control program compliant with 10 Code of Federal Regulations 835 requirements. However, one finding, two non-cited findings, and four observations were noted.

Within 30 days of receipt of this letter, WRPS should respond to the assessment finding and observations. A response for the non-cited findings is not necessary. For the findings, the response should include:

- The cause(s) of the findings;
- The corrective actions that have been taken to control or remove any adverse impact from noncompliant conditions (remedial actions) and the results achieved;
- The corrective actions that will be taken to identify the extent of condition, correct the cause(s), and prevent further findings; and
- The date when all corrective actions will be completed, verified, and compliance to applicable requirements achieved.

DEC 1 0 2008

If you have any questions, please contact me, or your staff may contact Jason A. Armstrong, Verification and Confirmation Division, (509) 372-0787.

Sincerely,

Joseph C. Poniatowski
Contracting Officer

ESQ:JAA

Attachment

cc w/attach:
R. Jansons, PAC
G. M. McCann, PAC
WRPS Correspondence

RECEIVED
DEC 1 1 2008
WRPS
CORRESPONDENCE CONTROL

Attachment
08-ESQ-303

1 0 2008

Radiological Source Control Assessment

A-08-ESQ-TANKFARM-010

Executive Summary

U.S. Department of Energy, Office of River Protection (ORP) conducted an assessment of the Washington River Protection Solutions LLC (WRPS) radiological source control program for Base Operations, Closure Operations, and 222-S Labs. The assessment team evaluated applicable procedures, examined records, made field observations, and conducted interviews of staff members who manage and implement the program to determine the adequacy and effectiveness of the Program since the last ORP assessment in May 2006. In general, the assessment team found the WRPS radiological source control program compliant with 10 Code of Federal Regulations (CFR) 835 requirements. However, one finding, two non-cited findings, three observations and one opportunity for improvement were noted:

- Finding A-08-ESQ-TANKFARM-010-F01: Radiological posting requirements, pre-approved routes, and radiological survey measurement requirements for the accountable Liquid Observation Well neutron source are not implemented in procedure TO-040-333, "Liquid Observation Well Surveillance Van Startup and Operation Procedure," Revision E-2;

- Non-Cited Finding A-08-ESQ-TANKFARM-010-N01: Source leak tests were not capable of detecting radioactive material leakage equal to or exceeding 0.005 microcurie;

- Non-Cited Finding A-08-ESQ-TANKFARM-010-N02: Single-Shell Tank Retrieval and Closure Radiological Control (RadCon) personnel issued accountable sources without being designated by the project RadCon director/manager;

- Observation A-08-ESQ-TANKFARM-010-O01: WRPS purchasing and procurement procedures could allow procurement of sources or source containers without obtaining RadCon Organization approval in some instances.

- Observation A-08-ESQ-TANKFARM-010-O02: Requirements for returning out of service sealed sources back into service from 10 CFR 835 are not correctly incorporated into TFC-ESHQ-RP_MON-C-24, "Sealed Radioactive Source Accountability and Control;"

- Observation A-08-ESQ-TANKFARM-010-O03: There are conflicting instructions in the Tank Farm Contractor sealed source procedure, TFC-ESHQ-RP_MON-C-24, "Sealed Radioactive Source Accountability and Control;" and

- Opportunity A-08-ESQ-TANKFARM-010-O04: Source user training (Course 356424) could be entered into the Access Control/Entry System for Radiological Work Permits governing source use.

List of Acronyms

ACES	Access Control/Entry System
ATS	Analytical Technical Services
CFR	Code of Federal Regulations
CH2M HILL	CH2M HILL Hanford Group, Inc.
DOE	U.S. Department of Energy
DRA	Determination of Required Approvals
ESQ	Office of Environmental Safety and Quality
HPT	Health Physics Technician
ISMS	Integrated Safety Management System
ITEM	Integrated Training Electronic Matrix
LOW	Liquid Observation Well
ORP	Office of River Protection
PAC	Project Assistance Corporation
PER	Problem Evaluation Request
RadCon	Radiological Control
RCT	Radiological Control Technician
RMA	Radioactive Material Area
RWP	Radiological Work Permit
SST	Single-Shell Tanks
TFC	Tank Farm Contractor
TFRCM	Tank Farm Radiological Control Manual
WFO	Waste Feed Operators
WRPS	Washington River Protection Solutions LLC

Table of Contents

Radiological Source Control Assessment i
A-08-ESQ-TANKFARM-010 i
Executive Summary ii
List of Acronyms iii
Report: 1
Purpose: 1
Scope: 1
Results: 1
Finding A-08-ESQ-TANKFARM-010-F01 1
Non-Cited Finding A-08-ESQ-TANKFARM-010-N01 3
Non-Cited Finding A-08-ESQ-TANKFARM-010-N02 3
Observation A-08-ESQ-TANKFARM-010-O01 4
Observation A-08-ESQ-TANKFARM-010-O02 5
Observation A-08-ESQ-TANKFARM-010-O03 5
Observation A-08-ESQ-TANKFARM-010-O04 5
Conclusions: 5
Criteria: 6
Applicable Requirements, References, and Documents: 6
Appendix A: Table of Completed Lines of Inquiry 10
Appendix B: ISMS Table 18
Appendix C: Assessment Plan 20
Appendix D: Team Members 27

Report:

Purpose:

U.S. Department of Energy (DOE), Office of River Protection (ORP) conducted an assessment of the Tank Farm Contractor (TFC) radiological source control program for Base Operations, Closure Operations, and 222-S Labs. This assessment fulfilled a scheduled requirement of the Annual Assessment Plan. The requirements of ESQ-OA-IP-01, "Integrated Assessment Program," Revision 0, directed the conduct of the assessment.

The assessment also served to meet DOE P 441.1, DOE Radiological Health and Safety Policy, Section 3.H requirements to conduct oversight to ensure compliance with departmental requirements and ensure implementation of appropriate radiological work practices.

Scope:

The TFC Radiological Source Control Program assessment scope included document reviews, personnel interviews and field observations of source control storage locations and use.

The assessment team evaluated applicable procedures, examined records, made field observations, and conducted interviews of staff members who manage and implement the program to determine the adequacy and effectiveness of the Program since the last ORP assessment in May 2006. Field work was conducted from October 8 through November 5, 2008.

Results:

This section presents each finding, concern, and other issue to allow Washington River Protection Solutions LLC (WRPS) management to initiate corrective action. Information detailing and supporting the findings, observations, and Assessment Follow-up Items are discussed for each issue.

Finding A-08-ESQ-TANKFARM-010-F01: Radiological posting requirements, pre-approved routes, and radiological survey measurement requirements for the accountable Liquid Observation Well (LOW) neutron source are not implemented in procedure TO-040-333, "Liquid Observation Well Surveillance Van Startup and Operation Procedure," Revision E-2.

Note: This issue is similar to a contributing factor in NTS-RP—CHG-TANKFARM-2005-005, "Improper Controls Associated with Use of Neutron Test Source."

Requirements:

HNF-5183, Tank Farm Radiological Control (RadCon) Manual, Article 234.1 states, "Areas shall [835.603] be posted to alert personnel to the presence of external radiation in accordance with Table 2-3 and Article 231. [RPP # 135 -137]"

HNF-5183, Tank Farm RadCon Manual, Article 423.4 states, "On-site transfers over nonpublic thoroughfares or between facilities on the same site shall [835.104] be performed in accordance with written procedures utilizing pre-approved routes. [RPP # 39] The procedures should include requirements to ensure appropriate monitoring and control of the radioactive material and should be approved by the Radiological Control Organization."

TFC-ESHQ-RP_RWP-C-03, "ALARA Work Planning," Revision L-2, Section 4.3.10.4, Step 4 states, "Specify neutron radiation surveys to be taken where personnel may be exposed to neutron radiation, such as when handling neutron test sources."

Discussion:

In January 2005, an Instrument Technician's dosimeter results indicated unexpected exposure to neutron radiation. An evaluation of the Instrument Technician's work activities identified that the individual had been performing authorized troubleshooting of neutron probes requiring the use of a neutron source. The total recorded neutron exposure was 275 mrem for the calendar year. As a result, NTS-RP—CHG-TANKFARM-2005-005, "Improper Controls Associated with Use of Neutron Test Source," was issued. One of the Compensatory Measures taken (CM-03) was "the procedure or work instruction addresses the use of the source." Reviews of procedures and work instructions associated with the neutron source used for LOW activities found deficiencies in addressing the use and control of the source.

The neutron source used for the LOW work activity generates a field requiring posting or control as a Radiation Area when out of the shielded container. A review of the applicable procedure and Radiological Work Permit (COF-002, Revision 001) did not require posting the area as a Radiation Area. Instead, procedure TO-040-333, "Liquid Observation Well Surveillance Van Startup and Operation Procedure," Revision E-2, Step 5.4.3 stated, "**WHENEVER** source is out of the cask at 272-WA garage, **LABEL** garage access doors 'CAUTION NEUTRON SOURCE IN USE DO NOT ENTER.'" Interviews with the Radiological Control Technician covering the work found that he did not post the area as a Radiation Area when the source was out of its container at the garage.

In addition, HNF-5183, Tank Farm Radiological Control Manual (TFRCM) Article 423.4 requires, "On-site transfers over nonpublic thoroughfares or between facilities on the same site shall [835.104] be performed in accordance with written procedures utilizing pre-approved routes [RPP # 39]." Review of the LOW procedure and the Onsite Routine Radioactive Shipment Record (ORRSR No. WRPS-200A-12-SRC) found no pre-approved routes identified.

Further, procedure TFC-ESHQ-RP_RWP-C-03, "ALARA Work Planning," Revision L-2, Section 4.3.10.4, Step 4 states, "Specify neutron radiation surveys to be taken where personnel may be exposed to neutron radiation, such as when handling neutron test sources." Contrary to

this direction, procedure TO-040-333, "Liquid Observation Well Surveillance Van Startup and Operation Procedure," Revision E-2 does not contain directions to perform neutron radiation surveys.

Non-Cited Finding A-08-ESQ-TANKFARM-010-N01: Source leak tests were not capable of detecting radioactive material leakage equal to or exceeding 0.005 microcurie.

Requirement:

HNF-5183, TFRCM, Article 431.4, in part, "...Source leak tests shall [835.1202(b)] be capable of detecting radioactive material leakage equal to or exceeding 0.005 μCi. [RPP # 240]"

Discussion:

The WRPS Company Technical Authority for the source control program reviewed source records, including source isotopic information, and found two accountable sources (Cadmium-109) whose radiation emitted (low energy photon) was not sufficient to be detected by the normal array of instrumentation employed at the Hanford Site. These two sources were disposed of prior to identifying the isotopes as "hard to detect" and prior to taking appropriate radiation measurements. This issue was identified by the contractor and is being tracked by WRPS RadCon using CH2M-PER-2008-1569.

Non-Cited Finding A-08-ESQ-TANKFARM-010-N02: Single-Shell Tank (SST) Retrieval and Closure RadCon personnel issued accountable sources without being designated by the project RadCon director/manager.

Requirement:

TFC-ESHQ-RP_MON-C-24, "Sealed Radioactive Source Accountability and Control," Revision E-2, Section 4.1, Step 3 requires "the project radiological control director/manager to designate source custodians and delegates by completing TFC Designation of Source Custodian (A-6003-939)."

Discussion:

While preparing for an ORP assessment of sealed radioactive source accountability and controls, WRPS personnel noted that multiple instances had occurred in which SST Retrieval and Closure RadCon personnel issued an accountable source without having TFC Designation of Source Custodian (A-6003-939) on file.

Procedure TFC-ESHQ-RP_MON-C-24, "Sealed Radioactive Source Accountability and Control," Revision E-2, Section 4.1, Step 3 requires "the project radiological control director/manager to designate source custodians and delegates by completing TFC Designation of Source Custodian (A-6003-939)." The personnel issuing the accountable source described above were trained to perform the duties of a source custodian/source custodian delegate, but

were not designated as such per the procedure. This is being tracked by the contractor in WRPS-PER-2008-0016.

Observation A-08-ESQ-TANKFARM-010-001: WRPS purchasing and procurement procedures could allow procurement of sources or source containers without obtaining RadCon Organization approval in some instances.

Note: No sources were found to have been procured without prior approval of the RadCon Organization.

Discussion:

During ORP assessment A-08-ESQ-TANKFARM-010, "Radiological Source Control," it was noted that an inconsistency was present between Attachment A of TFC-BSM-CP_CPR-C-01, "Purchasing Card (P-Card)" and Attachment B, Number 10 of TFC-BSM-CP_CPR-C-06, "Procurement of Items (Materials)." Attachment A of C-01 gives the P-Card Prohibited Items List, and one of the items on the list reads "Containers/Drums for Hazardous or Radiological Use, or Shipping unless new and never used." This statement is contrary to Attachment B, Number 10 of C-06, which requires RadCon Subject Matter Expert approval when purchasing an "item intended to contain or confine radioactive material."

The requirement in C-06 is new to Revision G-4, but it needs to be flowed down into C-01 as well. Any item intended to contain or confine radioactive material requires RadCon Organization approval, so it is not appropriate to purchase such items with a P-Card.

This information was communicated to the WRPS Company Technical Authority for radioactive sources, who initiated WRPS-PER-2008-0071 to resolve the issue.

Another issue noted was that the "Determination of Required Approvals" (DRA) web link from the Tank Farm Materials Service System (http://apweb200rl.gov/tfmss/working/index.cfm) contains information that is not consistent with the most current revision of TFC-BSM-CP_CPR-C-06, Revision G-4, "Procurement of Items (Materials)." The DRA links to Attachment B of C-06, but it links to an older revision. A dynamic link that will always retrieve the most current revision should be used to avoid mistakes when purchasing items as the approvals requirements are likely to change with each revision to C-06.

This information was communicated to the WRPS Company Technical Authority for radioactive sources, who initiated WRPS-PER-2008-0070 to resolve the issue.

Observation A-08-ESQ-TANKFARM-010-O02: Requirements for returning out of service sealed sources back into service from 10 Code of Federal Regulations (CFR) 835 are not correctly incorporated into TFC-ESHQ-RP_MON-C-24, "Sealed Radioactive Source Accountability and Control."

Discussion:

The TFC sealed source procedure TFC-ESHQ-RP_MON-C-24, "Sealed Radioactive Source Accountability and Control," Section 4.11.1, Bullet 4, does not require integrity testing "until they [the sources] are placed back into service." This direction does not flow down the 10 CFR 835.1202(c) requirement to perform "...leak testing prior to being returned to service." No instances were found where out of service sources have been returned to service, so this procedure direction does not appear to have been implemented.

Observation A-08-ESQ-TANKFARM-010-O03: There are conflicting instructions in the TFC sealed source procedure, TFC-ESHQ-RP_MON-C-24, "Sealed Radioactive Source Accountability and Control."

Discussion:

TFC-ESHQ-RP_MON-C-24, "Sealed Radioactive Source Accountability and Control," Steps 4.1.6 and 4.4.1, require labels to be applied to sealed sources or source containers. Contrary to this direction, Step 4.4.2 requires the user to apply the label to the source itself. This issue is being tracked for resolution by WRPS RadCon using WRPS-PER-2008-0024.

Observation A-08-ESQ-TANKFARM-010-O04: Source user training (Course 356424) could be entered into the Access Control/Entry System (ACES) for Radiological Work Permits governing source use.

Discussion:

In reviewing past assessments and Problem Evaluation Request (PER) in preparing for this assessment, instances were found where personnel without required source user training (Course 356424, "TFC Radioactive Source User Briefing,") had been issued sources in the past. Entering the source user training (356424) as a required course in the ACES system for Radiological Work Permits governing radiological source use may be one way to establish another barrier to prevent further instances of an untrained person inadvertently receiving a source.

Conclusions:

In general, the assessment team found the WRPS radiological source control program compliant with 10 CFR 835 requirements. Two different categories of issues were identified. The first was source leak tests were not capable of detecting radioactive material leakage equal to or exceeding

0.005 microcurie. Although this issue is being tracked for closure by WRPS management, strong procedural controls should be implemented to ensure this situation does not recur.

Second, the common thread between the remaining findings and observations was procedural inadequacies, inconsistencies, and lack of verbatim use. Both Integrated Safety Management System and Conduct of Operations principles require procedures to be implemented and followed. When procedures can't be followed as written, they should be formally changed. The large number of procedure issues identified could indicate an environment where procedures are not consistently utilized by employees in their day-to-day work.

Criteria:

The assessment utilized lines of inquiry developed from:

- regulatory and procedural requirements;
- prior programmatic and facility-specific assessments of program elements;
- past deficiencies and corrective actions;
- results of other assessments, evaluations, or events; and
- past and current management issues.

Lines of inquiry are detailed Attachment 1 of the Assessment Plan.

Applicable Requirements, References, and Documents:

10 CFR 835, Occupational Radiation Protection.

HNF-MP-5184, Radiation Protection Program, Revision 6, dated June 30, 2008.

TFC-ESHQ-RP_MON-C-24, Sealed Radioactive Source Accountability and Control, Revision E-2.

TFC-BSM-CP_CPR-C-06, Procurement of Items (Materials), Revision G-4.

TFC-BSM-CP_CPR-C-01, Purchasing Card (P-Card), Revision F-6.

HNF-5183, Tank Farm RadCon Manual.

TFC-ESHQ-RP_RWP-C-03, ALARA Work Planning, Revision L-2.

DOE ORP Implementing Procedure ESQ-QA-IP-01, Integrated Assessment Program, Revision 0.

DOE ORP Office of Environmental Safety and Quality (ESQ) Desk Instruction 1.7, Assessment Documentation, Revision 0.

DOE ORP ESQ Desk Instruction 1.8, Assessor Qualification Program, Revision 0.

DOE ORP ESQ Desk Instruction 1.10, Assessment Preparation, Revision 0.

DOE G 441.1-1C, Radiation Protection Programs Guide for use with Title 10, CFR, Part 835, Occupational Radiation Protection, Sections 13.2.2.4, Sealed Radioactive Sources [Records] and 15.0, Sealed Radioactive Source Accountability and Control.

Radiological Work Permit COF-002, "Perform Drywell and LOW logging operations; drywell and LOW vehicle maintenance," Revision 001, dated September 8, 2008.

Accountable sealed radioactive source leak test records at 222-S Labs, Base Operations East and Base Operations West.

TFC-ESHQ-RP_MON-C-24, "Sealed Radioactive Source Accountability and Control," Revision E-2.

"Sealed Radioactive Source Index" records for Base Operations Sampling, Analytical Technical Services (ATS) (Dane Butler), ATS (Operations), Base Operations West, Base Operations East, and the RadCon Program Count Room.

"TFC Radioactive Source Inventory and Accountable Source Integrity Test Record" documents for exempt sources at Base Operations West, Base Operations East, and 222-S Labs.

Source Logbooks (check-in/check-out) for Base Operations West, Base Operations East, and 222-S Labs.

Tank Farms LOW Van and Video Surveillance Operations training (Course 350091, Revision 04b) student guide and qualification card.

Procedure TO-040-333, "Liquid Observation Well Surveillance Van Startup and Operation Procedure," Revision E-2.

DOE ORP Radioactive Source Control Assessment, A-06-ESQ-TANKFARM-003, dated May 11, 2006.

CH2M HILL Hanford Group, Inc. (CH2M HILL), Specialty Assessment FY2006-SH&Q-S0308, Radioactive Source Accountability and Control Program, CH2M HILL RadCon Triennial Assessment of 10 CFR 835 Subpart M Sealed Radioactive Source Control, dated December 5, 2006.

ATS Specialty Assessment Report, Sealed Radioactive Source Control, FY2007-ATS-S-0335, dated July 16, 2007.

Closure RadCon Management Assessment Report FY2008-CO-M-0146, "Radiological Source Control, Radioactive Material Area Administration, Glove Bag Inspection and Use," dated March 13, 2008.

PER-2005-1000, dated March 7, 2005.

PER CH2M-PER-2006-1690, dated September 20, 2006.

PER CH2M-PER-2006-1699, dated September 21, 2006.

PER CH2M-PER-2007-0112, dated January 10, 2007.

PER CH2M-PER-2007-0223, dated January 23, 2007.

PER CH2M-PER-2007-1262, dated July 16, 2007.

PER CH2M-PER-2007-1532, dated August 31, 2007.

PER CH2M-PER-2007-1679, dated September 25, 2007.

PER CH2M-PER-2007-1698, dated September 29, 2007.

PER CH2M-PER-2008-0679, dated March 13, 2008.

PER CH2M-PER-2008-1569, dated August 6, 2008.

River Protection Project Lessons Learned Bulletin Number IB-05-030 (improper controls associated with the use of a neutron test source), issued July 11, 2005.

NTS-RP-CHG-TANKFARM-2005-005, Improper Controls Associated with the Use of a Neutron Test Source.

"TFC Designation of Source Custodian" approval sheets for Base Operations and Closure Operations (approximately 40 different approval sheets).

Interoffice Memorandum from Waste Feed Operations (WFO) RadCon, DESIGNATION OF SOURCE CUSTODIANS AND DELEGATES FOR ACCOUNTABLE SOURCES AT WFO, memorandum 7TC00-CKB-06-008, dated March 20, 2006.

Training records (through Integrated Training Electronic Matrix training resource system) for Course 351529, "Source Custodian Training," for Source Custodian and delegate (biennial re-qualification) users and issuers for all sources; Course 356430, "TFC Radioactive Source Issue

and Use," for Health Physics Technician (HPT) users and issuers for exempt-quantity sources; and Course 356424, "TFC Radioactive Source User Briefing," for source users other than HPTs.

TFC Radiological Survey Report COF-009150, LOW in TX Farm, dated October 23. 2008.

TFC Radiological Survey Report COF-009164, LOW in TX Farm, dated October 24, 2008.

Sealed Radioactive Source Index for ATS Operations, dated September 3, 2008.

Sealed Radioactive Source Index for Base Operations Sampling, dated July 14, 2008.

Sealed Radioactive Source Index for ATS (Dane Butler), dated September 3, 2008.

Sealed Radioactive Source Index for Base Operations West, dated October 6, 2008.

Sealed Radioactive Source Index for Radcon Program Count Rm, dated June 16, 2008.

Sealed Radioactive Source Index for Base Operations East, dated July 9, 2008.

Onsite Routine Radioactive Shipment Record, ORRSR No. WRPS-200A-12-SRC

Team Leader Approval:

_____

Jason Armstrong, DOE ORP

Appendix A: Table of Completed Lines of Inquiry

Criteria	Criteria Met?		Discussion
	Y	N	
The time interval to conduct the 36 month internal audit of the radiation protection program, the 24 month radiation safety retraining interval, and the 6 month accountable sealed radioactive source leak test, is not extended more than 30 days to accommodate scheduling. [10 Code of Federal Regulations (CFR) 835.3(e)]	X		Review of two accountable sealed radioactive source leak tests were performed (Am/Be source located at Radioactive Material Area (RMA) RMA-074 in 200 West Area; Mixed isotope source located at RMA-155 in 200 East Area). Both sources were leak (integrity) tested within the 6 month + 30 day time periods. The internal audit of the sealed radioactive source control program was reviewed for content and to ensure the 36 month interval requirement was met. The last audit of this program, "CH2M HILL, Hanford Group, Inc., Specialty Assessment FY2006-SH&Q-S0308, Radioactive Source Accountability and Control Program, CH2M HILL RadCon Triennial Assessment of 10 CFR 835 Subpart M, Sealed Radioactive Source Control," was dated December 5, 2006. This is within the required periodicity. Tank Farms and 222-S Labs source custodian training was reviewed. Procedure TFC-ESHQ-RP_MON-C-24, Revision E-2, Subsection 4.1 Step 5 requires source custodians to have had Course 351529, "Source Custodian Training," and to requalify every two years. Six Washington River Protection Solutions LLC (WRPS) source custodians, Seely, Prilucik, Godfrey, French, Barrett and Butler, training records in the Integrated Training Electronic Matrix (ITEM) database to validate they had received the training.

			In all six cases, the custodian was current on this training and the course was listed in their ITEM profile. No training issues were noted with source custodians.
Instruments and equipment used for monitoring individuals and areas are appropriate for the type(s), levels, and energies of the radiation(s) encountered. Radiological instruments are used only to measure the radiation for which their calibrations are valid. [10 CFR 835.401(b)(2)]	X		Records of integrity testing of accountable sealed radioactive sources were reviewed. Appropriate instruments were used for conducting dose rates surveys, and contamination surveys when required. One issue was previously identified by the contractor (see Non-Cited Finding A-08-ESQ-TANKFARM-010-N01). The WRPS Company Technical Authority for the source control program reviewed source records, including source isotopic information, and found two accountable sources (Cadmium-109) whose radiation emitted (low energy photon) was not sufficient to be detected by the normal array of instrumentation employed at the Hanford Site. These two sources were disposed of prior to identifying the isotopes as "hard to detect" and prior to taking appropriate radiation measurements. This issue is being tracked by WRPS Radiological Control (RadCon) using CH2M-PER-2008-1569.
Each item or container of radioactive material bears a durable, clearly visible label bearing the standard radiation warning trefoil and the words, "Caution, Radioactive Material" or "Danger, Radioactive Material." The label also provides sufficient information to permit individuals handling, using, or working in the vicinity of the items or containers to take precautions to avoid or control exposures. Items and containers are excepted from these labeling requirements only when meeting the criteria in 10 CFR 835.606(a) or (b). [10 CFR 835.605, .606(a) and .606(b)]	X		Sources were observed at 222-S Labs, Base Operations East, Base Operations West, and the RadCon Program Count Room. These onsite reviews of items or containers with accountable or exempt sources were found to bear the standard radiation warning trefoil and the words, "Caution, Radioactive Material." One Observation was noted: There are conflicting instructions in the Tank Farm Contractor (TFC) sealed source procedure TFC-ESHQ-RP_MON-C-24, "Sealed Radioactive Source Accountability and Control" (see Observation A-08-ESQ-TANKFARM-010-O03). Steps 4.1.6 and 4.4.1 require

			labels to be applied to sealed sources or source containers, but Step 4.4.2 states to apply the label to the source itself. This issue is being tracked by WRPS RadCon using WRPS-PER-2008-0024.
Records are maintained as necessary to demonstrate compliance with the requirements of 10 CFR 835.1201 and 10 CFR 835.1202 for sealed radioactive source control, inventory, and source leak tests. [10 CFR 835.704(f)]	X		Source control records were reviewed with no deficiencies noted. The "Sealed Radioactive Source Index" records for Base Operations Sampling, Analytical Technical Services (ATS) (Dane Butler), ATS (Operations), Base Operations West, Base Operations East, and the RadCon Program Count Room were reviewed and cross-referenced with a sampling of "TFC Radioactive Source Inventory and Accountable Source Integrity Test Record" forms for individual sources. No discrepancies were noted in the sampled records.
Sealed radioactive sources are used, handled, and stored in a manner commensurate with the hazards associated with operations involving the sources. [10 CFR 835.1201]	X		Sealed radioactive source storage locations were observed for Base Operations East, Base Operations West, RadCon Count Room, and 222-S Labs, as well as two remote accountable source storage locations (RMA-074 in 200 West Area; Mixed isotope source located at RMA-155 in 200 East Area) to investigate source storage conditions. Sources were found to be present in the cabinet/storage location when inventoried against the Source Logbook. Reviews of the Source Logbooks in these locations found sources are checked out by qualified source users (Course 356424, "TFC Radioactive Source User Briefing"). No instances of unqualified source users being issued a source was found during the log reviews. In addition, a walk down was conducted of exempt and accountable sources at 272-AW, Room 2, and the "rabbit hutches" near MO-979 across from AN Farm as part of a Sealed Radioactive Source program assessment conducted by the U.S. Department of Energy, Office of

			River Protection. Twenty three exempt sources listed on the sealed radioactive source index were found to be present in the source cabinet at 272-AW, Room 2. The Source Checkout log was reviewed for approximately the past month's entries and found to be satisfactory. A sampling of six sources selected at random found each source properly packaged and accounted for in the source checkout log. No discrepancies were noted. Additionally, one accountable source was found properly controlled at RMA-155 in 200 East near MO-979. The Sealed Radioactive Source Index showed the last integrity test date was June 3, 2008. A review of the TFC Radioactive Source Inventory and Accountable Source Integrity Test Record found the test to be completed on June 3, 2008, as stated, with no discrepancies noted. However, one observation and one recommendation were identified. As noted in WRPS-PER-2008-0016, WRPS personnel found multiple instances of Single-Shell Tank Retrieval and Closure RadCon personnel issuing an accountable source without having TFC Designation of Source Custodian (A-6003-939) on file (see Non-Cited Finding A-08-ESQ-TANKFARM-010-N02). This designation, while not required by 10 CFR 835 or the Tank Farm Radiological Control Manual, is required in Section 4.1, Step 3 of TFC-ESHQ-RP_MON-C-24, "Sealed Radioactive Source Accountability and Control," Revision E-2. This step requires the project RadCon director/manager to designate source custodians and delegates by completing TFC Designation of Source Custodian (A-6003-939) form. The personnel performing the

			accountable source issue described above were fully qualified to perform the duties of a source custodian/source custodian delegate, but were not designated as such in writing per the procedure. In reviewing past assessments and Problem Evaluation Requests (PER) in preparing for this assessment, instances were found where personnel without required source user training (Course 356424, "TFC Radioactive Source User Briefing,") had been issued sources in the past. It is recommended that WRPS evaluate establishing a source user Radiological Work Permit (RWP), and link the source user training (356424) as a required course in the RWP (see Opportunity for Improvement A-08-ESQ-TANKFARM-010-O04). This will prevent further instances of an untrained person inadvertently receiving a source.
Each accountable sealed radioactive source (except sources located in an area that is unsafe for human entry or otherwise inaccessible) is inventoried at intervals not exceeding six months. The inventory establishes the physical location of each accountable sealed radioactive source, verifies the presence and adequacy of associated postings and labels, and establishes the adequacy of storage locations, containers, and devices. [10 CFR 835.1202(a) and (d)]	X		Accountable sealed radioactive sources (and exempt sources) are inventoried at intervals not exceeding 6 months + 30 days to accommodate scheduling. [10 CFR 835.3(e)]. The "Sealed Radioactive Source Index" requires the custodian to establish the physical location (storage location). Procedure TFC-ESHQ-RP_MON-C-24, "Sealed Radioactive Source Accountability and Control," Section 4.5 requires verification of the presence and adequacy of associated postings as required by 10 CFR 835.1202(a)(2) upon initial receipt of a source. The "TFC Radioactive Source Inventory and Accountable Source Integrity Test Record" requires verification of the presence and adequacy of associated postings and labels as required by 10 CFR 835.1202(a)(2) during the 6 month inventory. Field verification of accountable source

			storage location postings were conducted at RMA-074 in 200 West Area and RMA-155 in 200 East Area. No discrepancies were noted. In addition, a review of accountable sealed radioactive sources found them inventoried at intervals not exceeding six months. The inventory established the physical location of each accountable sealed radioactive source, verified the presence and adequacy of associated postings and labels, and established the adequacy of storage locations, containers, and devices.
Each accountable sealed radioactive source (except sources consisting solely of gaseous radioactive material or tritium, or sources located in an area that is unsafe for human entry or otherwise inaccessible) is leak tested upon receipt, when damage is suspected, and at intervals not exceeding six months. Source leak tests are capable of detecting radioactive material leakage equal to or exceeding 0.005 microcurie. [10 CFR 835.1202(b) and (d)]	X		Procedure TFC-ESHQ-RP_MON-C-24, "Sealed Radioactive Source Accountability and Control," Section 4.3.5 requires integrity testing upon receipt of new accountable sources prior to use. As noted above, accountable sealed radioactive sources are inventoried at a frequency of every 6 months +30 days for scheduling. This was verified through document reviews and field observations. Review of records and procedure requirements of TFC-ESHQ-RP_MON-C-24, "Sealed Radioactive Source Accountability and Control" found instruments used for source leak tests are capable of detecting radioactive material leakage equal to or exceeding 0.005 microcurie (11,100 dpm), with one exception as noted above and identified in Non-Cited Finding A-08-ESQ-TANKFARM-010-N01.
Accountable sealed radioactive sources removed from service and not subject to periodic leak testing are stored in a controlled location, are periodically inventoried as required by 10 CFR 835.1202(a), and are source leak tested prior to being returned to service. [10 CFR 835.1202(c)]	X		One set of accountable sealed radioactive sources have been removed from service and are not periodically leak tested. Sources SRCF 3052 and SRCF 3053 (Cf-252) are stored in a shielded, locked column at the 222-S Facility. Review of applicable records and a field walk down of the storage location indicate these sources have continued to be inventoried and controlled as required. One Observation was noted: The TFC

			sealed source procedure TFC-ESHQ-RP_MON-C-24, "Sealed Radioactive Source Accountability and Control," Section 4.11.1, Bullet 4, does not require integrity testing "until they [the sources] are placed back into service." (See Observation A-08-ESQ-TANKFARM-010-O02.) This direction does not clearly flow down the 10 CFR 835.1202(c) requirement to perform "...leak testing prior to being returned to service."
Accountable sealed radioactive sources found to be leaking radioactive material are controlled in a manner that minimizes the spread of radioactive contamination. [10 CFR 835.1202(e)]	X		Procedure TFC-ESHQ-RP_MON-C-24, "Sealed Radioactive Source Accountability and Control" requires sealed radioactive sources found to be leaking to be controlled to minimize the spread of contamination. No actual instances of leaking accountable sealed radioactive sources were found in occurrence reports or in a search through the CH2M HILL Hanford Group, Inc. /WRPS PER system.
Observe the use of Liquid Observation Well (LOW) source, a neutron source used in measuring liquids in tanks and through risers, to ensure source requirements are met.	X		The LOW source was observed at RMA-074 in 200 West Area. The source was secured with a locked access, and the storage location was properly posted for the radiological hazard present. Tank Farms LOW Van and Video Surveillance Operations training (Course 350091, Revision 04b) was reviewed for source control instructions. Page 8 of the Student Guide contains the warning: "Neutron Source - ALARA, utilize the source tool to keep the Am241/Be7 source pointed away from personnel. Never leave the source unattended." A review of procedure TO-040-333, "Liquid Observation Well Surveillance Van Startup and Operation Procedure," Revision E-2 found the warning, "Failure to handle the probe and source carefully or keep it at a maximum distance can result in increased Neutron exposure."

			One finding was identified: The neutron source used for the LOW work activity generates a field requiring posting or control as a Radiation Area (see Finding A-08-ESQ-TANKFARM-010-F01). Interviews with the Radiological Control Technician covering the work, as well as review of the applicable procedure and RWP (COF-002, Revision 001) did not explicitly require posting the area as a Radiation Area. Instead, procedure TO-040-333, "Liquid Observation Well Surveillance Van Startup and Operation Procedure," Revision E-2, Step 5.4.3 stated, "**WHENEVER** source is out of the cask at 272-WA garage, **LABEL** garage access doors 'CAUTION NEUTRON SOURCE IN USE DO NOT ENTER.'" In addition, HNF-5183, Tank Farm Radiological Control Manual Article 423.4 requires, "On-site transfers over nonpublic thoroughfares or between facilities on the same site shall [835.104] be performed in accordance with written procedures utilizing pre-approved routes. [RPP # 39] The procedures should include requirements to ensure appropriate monitoring and control of the radioactive material and should be approved by the Radiological Control Organization." Review of the LOW procedure found no pre-approved routes. Further, Procedure TFC-ESHQ-RP_RWP-C-03, "ALARA Work Planning," Revision L-2, Section 4.3.10.4, Step 4 states, "Specify neutron radiation surveys to be taken where personnel may be exposed to neutron radiation, such as when handling neutron test sources." Contrary to this direction, procedure LOW does not contain directions to perform neutron radiation surveys.

Appendix B: ISMS Table

ISMS Evaluation

For each of the following identify whether the report:

S = Identified a Strength
N = Found the topic functioning with no special strength or weakness
W = Identified a Weakness
N/A = Did not address the topic

Topical Area	Evaluation	Comment (Optional)
Core Function 1: Define Scope of Work	N/A	
Core Function 2: Analysis of Hazards	N	
Core Function 3: Develop and Implement Hazard Controls	W	The majority of findings and observations in this report were procedural inadequacies and inconsistencies, indicating improvement is needed in implementing controls in procedures for identified hazards.
Core Function 4: Perform Work Within Controls	N	
Core Function 5: Provide Feedback and Continuous Improvement	S	Several of the findings and observations in this report were found by the Washington River Protection Solutions LLC (WRPS) contractor and entered into the WRPS corrective action system, indicating an effective continuous improvement system in this functional area.
Principle 1: Line Management Responsibility for Safety	N/A	
Principle 2: Clear Roles and Responsibilities	N	
Principle 3: Competence Commensurate with Responsibilities	N	
Principle 4: Balanced Priorities	N/A	
Principle 5: Identification of Safety Standards and Requirement	N	
Principle 6: Hazard Controls Tailored to Work Being Performed	N	
Principle 7: Operations Authorization	N/A	
Supplemental Principle 1: Highly Reliable Operational Performance	N/A	

Supplemental Principle 2: Individual Attitude and Responsibility	N	
Supplemental Principle 3: Performance Assurance	N/A	
Supplemental Principle 4: Organizational Performance Improvement	N	

Appendix C: Assessment Plan

Radiological Source Control Assessment
A-08-ESQ-TANKFARM-010

Purpose:

U.S. Department of Energy (DOE), Office of River Protection (ORP) will conduct an assessment of the Tank Farm Contractor (TFC) radiological source control program for Base Operations, Closure Operations, and 222-S Labs. This assessment fulfills a scheduled requirement of the Annual Assessment Plan. The requirements of ESQ-OA-IP-01, "Integrated Assessment Program," Revision 0, will direct the conduct of the assessment.

This assessment will also serve to meet DOE P 441.1, DOE Radiological Health and Safety Policy, Section 3.H requirements to conduct oversight to ensure departmental requirements are being complied with and appropriate radiological work practices are being implemented.

Scope:

The TFC Radiological Source Control Program assessment scope will include document reviews, personnel interviews and field observations of source control storage locations and use.

The assessment team will evaluate applicable procedures, examine records, interview staff members who manage and implement the program, and make field observations to determine the adequacy and effectiveness of the Program since the last ORP assessment in May 2006. The in-brief meeting is tentatively scheduled for the week of October 6, 2008. The assessment team will conduct field work from October 8 through 17, 2008. The exit briefing is expected to be conducted the week of October 20, 2008.

Criteria:

The assessment will utilize lines of inquiry to conduct fieldwork. Lines of inquiry were developed from:

- regulatory and procedural requirements;
- prior programmatic and facility-specific assessments of program elements;
- past deficiencies and corrective actions;
- results of other assessments, evaluations, or events; and
- past and current management issues.

Lines of inquiry are detailed in Enclosure 1. Results from prior reviews of program elements, and past deficiencies and corrective actions are detailed in Enclosure 2. Facility Representative and ORP Personnel Inputs are detailed in Enclosure 3.

Team Members:

The assessment team will be lead by Jason Armstrong, DOE ORP. Rick Jansons, PAC for DOE ORP, will assist as a team member.

Applicable Requirements, References and Documents:

10 Code of Federal Regulations 835, Occupational Radiation Protection

HNF-MP-5184, Radiation Protection Program, Revision 6, dated June 30, 202008

TFC-ESHQ-RP_MON-C-24, Sealed Radioactive Source Accountability and Control, Revision E-2

TFC-BSM-CP_CPR-C-06, Procurement of Items (Materials), Revision G-4

TFC-BSM-CP_CPR-C-01, Purchasing Card (P-Card), Revision F-6

HNF-5183, Tank Farm Radiological Control Manual

DOE ORP Implementing Procedure ESQ-QA-IP-01, Integrated Assessment Program, Revision 0

DOE ORP Office of Environmental Safety and Quality (ESQ) Desk Instruction 1.7, Assessment Documentation, Revision 0

DOE ORP ESQ Desk Instruction 1.8, Assessor Qualification Program, Revision 0

DOE ORP ESQ Desk Instruction 1.10, Assessment Preparation, Revision 0

DOE G 441.1-1C, Radiation Protection Programs Guide for use with Title 10, Code of Federal Regulations, Part 835, Occupational Radiation Protection, Sections 13.2.2.4, Sealed Radioactive Sources [Records] and 15.0, Sealed Radioactive Source Accountability and Control.

Other Tank Farm-specific procedures and policies related to radiological source control as discussed in this Assessment Plan.

Team Leader Approval:

_____Signature on File_____
Jason Armstrong, DOE ORP

Enclosure 1
Lines of Inquiry from 10 CFR 835

The time interval to conduct the 36 month internal audit of the radiation protection program, the 24 month radiation safety retraining interval, and the 6 month accountable sealed radioactive source leak test, is not extended more than 30 days to accommodate scheduling. [10 Code of Federal Regulations (CFR) 835.3(e)]

Instruments and equipment used for monitoring individuals and areas are appropriate for the type(s), levels, and energies of the radiation(s) encountered. Radiological instruments are used only to measure the radiation for which their calibrations are valid. [10 CFR 835.401(b)(2)]

Each item or container of radioactive material bears a durable, clearly visible label bearing the standard radiation warning trefoil and the words, "Caution, Radioactive Material" or "Danger, Radioactive Material." The label also provides sufficient information to permit individuals handling, using, or working in the vicinity of the items or containers to take precautions to avoid or control exposures. Items and containers are excepted from these labeling requirements only when meeting the criteria in 10 CFR 835.606(a) or (b). [10 CFR 835.605, .606(a) and .606(b)]

Records are maintained as necessary to demonstrate compliance with the requirements of 10 CFR 835.1201 and 10 CFR 835.1202 for sealed radioactive source control, inventory, and source leak tests. [10 CFR 835.704(f)]

Sealed radioactive sources are used, handled, and stored in a manner commensurate with the hazards associated with operations involving the sources. [10 CFR 835.1201]

Each accountable sealed radioactive source (except sources located in an area that is unsafe for human entry or otherwise inaccessible) is inventoried at intervals not exceeding six months. The inventory establishes the physical location of each accountable sealed radioactive source, verifies the presence and adequacy of associated postings and labels, and establishes the adequacy of storage locations, containers, and devices. [10 CFR 835.1202(a) and (d)]

Each accountable sealed radioactive source (except sources consisting solely of gaseous radioactive material or tritium, or sources located in an area that is unsafe for human entry or otherwise inaccessible) is leak tested upon receipt, when damage is suspected, and at intervals not exceeding six months. Source leak tests are capable of detecting radioactive material leakage equal to or exceeding 0.005 microcurie. [10 CFR 835.1202(b) and (d)]

Accountable sealed radioactive sources removed from service and not subject to periodic leak testing are stored in a controlled location, are periodically inventoried as required by 10 CFR 835.1202(a), and are source leak tested prior to being returned to service. [10 CFR 835.1202(c)]

Accountable sealed radioactive sources found to be leaking radioactive material are controlled in a manner that minimizes the spread of radioactive contamination. [10 CFR 835.1202(e)]

Enclosure 2
Previous Assessment and Program Review Results:

U.S. Department of Energy, Office of River Protection (ORP), Radioactive Source Control Assessment, A-06-ESQ-TANKFARM-003, dated May 11, 2006.

The assessment evaluated the Radioactive Source Control Program as part of the 10 CFR 835 triennial review process and as ORP follow-up to the CH2M HILL Hanford Group, Inc. (CH2M HILL)-identified radioactive source control event (Problem Evaluation Report [PER] 2005-1000 and Noncompliance Tracking System Report NTS-RP-CHG-TANKFARM-2005-0005). The team determined the program met regulatory and contract requirements and functioned effectively. The assessors identified no findings, two Good Practices, and four observations.

CH2M HILL, Specialty Assessment FY2006-SH&Q-S0308, Radioactive Source Accountability and Control Program, CH2M HILL Radiological Control (RadCon) Triennial Assessment of 10 CFR 835 Subpart M Sealed Radioactive Source Control, dated December 5, 2006.

This assessment was performed to determine implementation effectiveness of the CH2M HILL sealed radioactive source accountability and control program in accordance with 10 CFR 835 and implemented by the company's Radiation Protection Program, HNF-MP-5184 and Tank Farms Radiological Control Manual HNF-5183. The program was found to be compliant. The assessment team identified one finding, seven observations, and five noteworthy practices. Two PERs were initiated during the course of the assessment (CH2M-PER-2006-1690 and CH2M-PER-2006-1699). Both of these PERs are reviewed below. The assessment identified one finding:

Finding RP-F-01: "Source storage location does not meet the control intent of procedure TFC-ESHQ-RP-MON-C-24, Rev D, Sealed Radioactive Source Accountability and Control. Three radioactive sources were found stored and locked in a small red tool box on the floor in the B-1E vault location. The area/room/vault is an interior room to the B-1A count room where both the count room and inner vault doors are not locked. The tool box weighs approximately 30 pounds and could be picked up and hand carried out of the room."

Analytical Technical Services Specialty Assessment Report, Sealed Radioactive Source Control, FY2007-ATS-S-0335, dated July 16, 2007.

This assessment was performed to evaluate the effectiveness of the Analytical Technical Services radioactive sealed source control program at the 222-S Laboratory and Waste Sampling. The assessment concluded radioactive sealed source control is performed safely and in accordance with written requirements and work documents. One Negative Observation was noted:

"There were two sources at the 222-S Laboratory that were checked out properly and sent to the Pacific Northwest National Laboratory (PNNL) for calibration but were not signed back

in properly by the RCT upon their return."

This issue is documented in PER CH2M-PER-2007-1262.

Closure Radiological Control Management Assessment Report FY2008-CO-M-0146, "Radiological Source Control, Radioactive Material Area Administration, Glove Bag Inspection and Use," dated March 13, 2008.

This management assessment was conducted to determine Closure Operations procedural compliance with, in part, the radiological source control program requirements. The assessment supported transition plans for radiological functional areas transferred to Base Operations as part of the company reorganization conducted during Spring 2008. The assessment identified no source control findings, and concluded the sealed radiological source control program was fully implemented. In addition, the assessor evaluated source checkout logs at 2704HV to validate closure of PER-2007-1679 and found the logs completed satisfactorily. This PER is reviewed below.

PER CH2M-PER-2006-1690, dated September 20, 2006.

This PER was issued to document the loss of records documenting the sealed source integrity test and inventory at 222-S labs. This PER was initiated in conjunction with Specialty Assessment FY2006-SH&Q-S0308, Radioactive Source Accountability and Control Program.

PER CH2M-PER-2006-1699, dated September 21, 2006.

This PER was issued to document use of an incorrect Radiological Work Permit by a qualified source user when using an accountable source. This PER was initiated in conjunction with Specialty Assessment FY2006-SH&Q-S0308, Radioactive Source Accountability and Control Program.

PER CH2M-PER-2007-0112, dated January 10, 2007.

This PER was initiated by a RadCon Technician (RCT) to identify a locked source cabinet at SY Farm with unknown contents and no key. The RCT recommended cutting the lock, surveying and removing the contents, and disposing of the cabinet. No action has been taken, however package 2E-04-2231 was initiated (but never worked) to address the concern.

PER CH2M-PER-2007-0223, dated January 23, 2007.

An assessment at 222-S Labs found RCTs training on "Radioactive Source Issue and Control" was completed, but not entered into the Integrated training Electronic Matrix.

PER CH2M-PER-2007-1262, dated July 16, 2007.

Two radioactive sealed sources at the 222-S Labs transferred to PNNL for calibration were not properly documented upon return to 222-S Labs.

PER CH2M-PER-2007-1532, dated August 31, 2007.

During the performance of Specialty Assessment FY2007-SHQ-S-0339, Assessment of Radiological Records, Finding 2 identified that radioactive source control records did not meet procedural requirements. The PER was closed by a line-by-line review of the source records, and a discussion of the requirements by the Analytical Technical Services' RadCon Director with the CH2M HILL Central RadCon Organization.

PER CH2M-PER-2007-1679, dated September 25, 2007.

This PER identifies an event where an unauthorized person signed out an exempt radioactive source to a qualified source user.

PER CH2M-PER-2007-1698, dated September 29, 2007.

This PER reflects actions taken by a member of the RadCon Organization responding to PER-2007-1679. This PER documents instances of unauthorized and unqualified personnel issuing radioactive sources to source users.

PER CH2M-PER-2008-0679, dated March 13, 2008.

As part of the corrective actions for PERs 2007-1679 and 2007-1698, a Management Oversight Program focused on radioactive source control was conducted and generated this PER. Examples of incomplete or inadequate record entries were found on Radioactive Source Checkout Log Sheets.

PER CH2M-PER-2008-1569, dated August 6, 2008.

This PER identified two accountable sources (cadmium-109) whose radiation emitted (low energy beta) is not sufficient to be detected by the normal array of instrumentation employed at the Hanford Site. These two sources were disposed of prior to identifying the isotopes as "hard to detect" and prior to taking appropriate radiation measurements.

In addition to the above reports, River Protection Project Lessons Learned Bulletin Number IB-05-030 identified improper controls associated with the use of a neutron test source resulting in a higher than expected cumulative neutron dose of 275 mrem in 2004. The investigation into the source of this exposure revealed that the neutron dose occurred during the troubleshooting and repair of failed neutron probes, which involved the use of a neutron source. Investigation into the cause of the exposure revealed breakdowns in both work planning for the job evolution and in control of the neutron source. The issue is also identified in PER-2005-1000, dated March 7, 2005, and in NTS-RP—CHG-TANKFARM-2005-005.

Enclosure 3
Facility Representative/ORP Personnel Inputs:

In preparation for the assessment input was obtained from Brian Harkins, Tank Farm Operations Division Director, concerning previously observed Source Control weaknesses and areas of information or concern. Mr. Harkins recommended ensuring sources were appropriately transferred from CH2M HILL Hanford Group, Inc., to Washington River Protection Solutions LLC during the recent contract turnover. In addition, he recommended talking with Facility Representatives from Base Operations, Closure Operations, and 222-S labs to identify additional areas of potential concern.

The assessment was discussed with Derek Wright and Rob Yasek, Closure Operations Facility Representatives. Mr. Yasek discussed observing the use of Liquid Observation Well source, a neutron source used in measuring liquids in tanks and through risers. He also discussed moisture data logging use of sources in drywells around Single-Shell Tanks.

Chris Sorensen, Base Operations Facility Representative, and Courtney Blanchard, 222-S Laboratory Facility Representative, were also contacted. No specific issues were raised.

The areas discussed have been built into the Lines of Inquiry (Attachment 1). The Facility Representatives will be invited to all Assessment Team briefings and any field activities the team may conduct.

Appendix D: Team Members

The assessment team was lead by Jason Armstrong, U.S. Department of Energy (DOE), Office of River Protection (ORP). Rick Jansons, Project Assistance Corporation (PAC) for DOE ORP, assisted as a team member.

Jason Armstrong:

Mr. Armstrong is a Senior Health Physicist with the DOE ORP. He has primary responsibility for contractor oversight of radiological control programs at the Tank Farms and the Waste Treatment and Immobilization Plant. Mr. Armstrong joined the ORP from the DOE Brookhaven Site Office where he was a Facility Representative and Program Manager for Radiation Protection, Nuclear Safety, Integrated Safety Management, and Event & Issues Management.

Mr. Armstrong has 16 years nuclear experience. Prior to joining the DOE, Mr. Armstrong was the Deputy Radiation Protection Manager for a commercial nuclear power utility, Radiation Safety Manager for a major oil well logging company, Senior Radiological Engineer for reactor decommissioning projects at the Hanford Site, and a radiological control technician at several nuclear power utilities. Mr. Armstrong has extensive experience leading and participating in review teams. Mr. Armstrong has been trained by the Institute of Nuclear Power Operations for performing evaluations of Plant Maintenance, Human Performance, Corrective Action Management, and Work Planning. Mr. Armstrong has lead reviews for radiation protection, corrective action management, human performance, Integrated Safety Management System (ISMS) implementation, and nuclear safety, including the review and approval of a Documented Safety Analysis for the Decontamination and Decommissioning of the Brookhaven Graphite Research Reactor, High Flux Beam Reactor, and operations at a waste management facility.

Mr. Armstrong has a B.S. in Radiation Health Physics from Oregon State University, is a Certified Health Physicist, and earned registry by the National Registry of Radiation Protection Technologists.

Richard Jansons:

Richard Jansons is a Senior Radiological Control Consultant for the DOE through PAC. He has over 24 years experience in the nuclear industry. As an NQA-1 Lead Auditor, he has performed dozens of Operational Readiness Reviews, Readiness Assessments, ISMS Audits, surveillances and programmatic assessments in the areas of Radiological Control, Emergency Management, Training, and Operations.

His experience includes service in the U.S. Navy Nuclear Submarine service as a Mechanical Operator and Engineering Lab Technician. Following his military service, he was the radio-analytical laboratory supervisor at the Nevada Test Site, and then moved to Westinghouse Hanford's Radiological Control Organization. During his years at Hanford, he has qualified and

served as a Lead Senior Radiological Control Technician, Technical Instructor, Radiological Control First Line Supervisor, and Radiological Control Manager. He has earned registry by the National Registry of Radiation Protection Technologists.

His formal training includes U.S. Navy courses, including Naval Nuclear Propulsion School and Prototype training, Engineering Laboratory Technician Training, and Quality Assurance Inspector/Supervisor School. He has attended many corporate and university courses in Health Physics. He earned a Certificate in Emergency Management from Western Washington University.

Message

From: Rolph, James T
Sent: Thursday, February 19, 2009 11:45 AM
To: Glaman, Linda; Nielsen, Judith A; Upchurch, Craig E
Subject: RE: WRPS-PER-2009-0008
Follow Up Flag: Follow up
Flag Status: Orange

Correct.

From: Glaman, Linda
Sent: Thursday, February 19, 2009 8:10 AM
To: Rolph, James T; Nielsen, Judith A; Upchurch, Craig E
Subject: RE: WRPS-PER-2009-0008

So, WRPS-PER-2009-0008 was not identified by DOE, but during a response to a DOE identified PER?

Thanks...As always, please call if you have questions

Linda RB Glaman
Operations Support Specialist/CAM
376-1776/376-6249
2750E/A-208/R2-87
"The only stupid question is the one that remains unasked"

From: Rolph, James T
Sent: Wednesday, February 18, 2009 8:51 PM
To: Glaman, Linda; Nielsen, Judith A; Upchurch, Craig E
Subject: RE: WRPS-PER-2009-0008

Linda,
Our CAP response was separate from this PER. WRPS-PER-2008-0381 captured the findings from the surveillance and the PER we initiated was a result of identification of additional related issues discovered while developing the CAP.
Jim

From: Glaman, Linda
Sent: Wednesday, February 18, 2009 8:36 AM
To: Nielsen, Judith A; Upchurch, Craig E; Rolph, James T
Subject: RE: WRPS-PER-2009-0008

So, WRPS no longer communicates it CAP to ORP for concurrence on assessments? I ask because, in the past, the CAP as been sent and concurred to prior to Corrective Action launch - that way the comments would be incorporated into the corrective actions. Operations have been doing it this way so I just want to verify that ORP is not requiring a review/comment phase in the assessment

response. It can get really messy to try to modify CASs after they are launched and work on the actions has begun.

Thanks...As always, please call if you have questions

Linda RB Glaman
Operations Support Specialist/CAM
376-1776/376-6249
2750E/A-208/R2-87

"The only stupid question is the one that remains unasked"

From: Nielsen, Judith A
Sent: Wednesday, February 18, 2009 8:29 AM
To: Glaman, Linda; Upchurch, Craig E
Subject: FW: WRPS-PER-2009-0008

FYI

Judith Nielsen
Manager
Waste Services & Tank Sampling
509 438-1077
509 373-6732

From: Rolph, James T
Sent: Wednesday, February 18, 2009 8:12 AM
To: Nielsen, Judith A
Subject: RE: WRPS-PER-2009-0008

Judith,
Yes, I will look at what form of response they require from us and will initiate that response once I know the PER is closed. Thank you for working the issue to closure.
Jim

From: Nielsen, Judith A
Sent: Wednesday, February 18, 2009 8:09 AM
To: Rolph, James T
Cc: Nielsen, Judith A
Subject: WRPS-PER-2009-0008

Jim,

We have our procedures in place and am closing the #3 action for WRPS-PER-2009-0008 for the transport routes.

Will you be making the notification to DOE in response to the assessment. Let me know if you need additional information. I plan to have the closure submitted today, just finishing up some details.

Let me know your thoughts.

Judith Nielsen
Manager
Waste Services & Tank Sampling
509 438-1077
509 373-6732

Task# WRPS-PER-2009-0008.1			
E-STARS[R] Report Task Detail Report 02/23/2009 0315			
TASK INFORMATION			
Task#	WRPS-PER-2009-0008.1		
Subject	WRPS-PER-2009-0008; RES; The Onsite Shipment procedure TFC-OPS-WM-C-019 will be updated to: 1. Include the reference to the Hanford Sitewide Transpo		
Parent Task#	WRPS-PER-2009-0008	Status	CLOSED 02/23/2009
Reference	WRPS-PER-2009-0008	Due	03/01/2009
Originator	^PER CAs	Priority	Medium
Originator Phone		Category	PER
Origination Date	02/23/2009 1046	Generic1	None
Remote Task#		Generic2	None
Deliverable	PER Review	Generic3	None
Class	None	View Permissions	Global
Instructions	*No Instructions*		
ROUTING LISTS			
1	Corrective Action		Inactive
	The Onsite Shipment procedure TFC-OPS-WM-C-019 will be updated to: 1. Include the reference to the Hanford Sitewide Transportation Safety Document (TSD) DOE-RL-2001-0036)reference with defined transfer routes. 2. The ORRSRs were revised to include the route and route reference to the Hanford Site TSD. RESPONSIBLE MANAGER: When this corrective action is complete, enter a closure statement in E-STARS and close the E-STARS subtask. Refer to the Problem Evaluation Request procedure TFC-ESHQ-Q-C-C-01, Section 4.4 for closure documentation requirements		
	• Nielsen, Judith A - Assign - Completed with comments - 02/23/2009 1203 *Instructions:*		
ATTACHMENTS			
Attachments	1. 0802829_08-ESQ-303_WRPS - [0812110773][1].pdf 2. Link to PER 3. RE_ WRPS-PER-2009-0008.msg 4. TFC-OPS-WM-C-19,_Onsite_Hazardous_Material_Shipments.doc 5. TSD route plan list.pdf		
COLLABORATION			

Task# WRPS-PER-2009-0008.1			
COMMENTS			
Poster	Nielsen, Judith A (Upchurch, Craig E) - 02/23/2009 1202		
	Completed		
	TFC-OPS-WM-C-19, "Onsite Hazardous Material Shipments" procedure was issued on 2/12/09 and completes the corrective actions. The procedure is attached.		
Poster	^PER CAs (Owen, Annette) - 02/23/2009 0302		
	CLOSED		
	Closure statement and attached documentation are adequate to close this action.		
TASK DUE DATE HISTORY			
Modified	02/23/2009 1046 - ^PER CAs	New Due Date	03/01/2009 0000
Modified	02/23/2009 1046 - ^PER CAs	New Due Date	03/05/2009 0000
SUB TASK HISTORY			
No Subtasks			
-- end of report --			

Ownership matrix

TABLE OF CONTENTS

1.0 PURPOSE AND SCOPE 2
2.0 IMPLEMENTATION 2
3.0 RESPONSIBILITIES 2
3.1 Transportation Safety Officer 2
4.0 PROCEDURE 3
4.1 Packaging Selection and Assistance 3
4.2 Non-Radioactive Hazardous Material/Waste Shipments 3
4.3 Radioactive Material/Waste or Mixed Waste Shipments 5
4.4 Onsite Routine Radioactive Shipment Records 8
4.5 Road Closure South of Wye Barricade 9
5.0 DEFINITIONS 11
6.0 RECORDS 12
7.0 SOURCES 13
7.1 Requirements 13
7.2 References 13

TABLE OF ATTACHMENTS

ATTACHMENT A - ADVERSE WEATHER AND ROAD CONDITIONS 15
ATTACHMENT B – ROAD CLOSURE NOTIFICATION CHECKLIST 16

1.0 PURPOSE AND SCOPE
(7.1.3)

This procedure implements the requirements associated with preparing and transporting hazardous material on the Hanford Site when transportation meets the definition of "Onsite." Hazardous material includes hazardous waste and hazardous substances as defined in 49 CFR 171.8, and radioactive material as described in 49 CFR 173.403.

This procedure applies to Washington River Protection Solutions LLC (WPRS) employees who perform onsite transportation and packaging operations involving radioactive and hazardous material/waste. Materials of Trade are excluded from the scope of this procedure.

2.0 IMPLEMENTATION

This procedure is effective on the date shown in the header.

3.0 RESPONSIBILITIES

3.1 Transportation Safety Officer

1. Ensure that shipping activities are performed in accordance with company policies/procedures, applicable federal and state regulations, and Hanford site-specific procedures.

2. Ensure that all personnel responsible for performing functions identified within this procedure have been adequately trained and qualified.

3. Obtain the necessary support needed for the completion of the activities associated with this procedure.

4. Approve personnel to ship hazardous, radioactive and mixed wastes and materials on or off the Hanford Site.

5. Maintain the list of approved authorized shippers for WRPS.

6. Approve the shipment of a "non-DOT" container over public accessible roads on the Hanford Site.

7. Coordinate shipping activities to ensure shipments are completed.

8. Arrange for equipment/materials and authorized shipper coverage in support of shipping activities.

4.0 PROCEDURE
(7.1.3, 7.1.5)

WRPS employees must comply fully with the DOE approved onsite safety basis for the packaging and transportation system used for onsite packaging systems. The safety basis includes the DOE/RL 2001 36, "Hanford Site Wide Transportation Safety Document," (TSD) and the applicable Package Specific Safety Document (PSSD), One-Time Request for Shipment (OTRS), or Special Packaging Authorization (SPA) authorization as approved in the TSD. If an offsite packaging system is used onsite, the safety basis includes the DOT, DOE or NRC authorization approved by DOE under an onsite PSSD, OTRS or SPA.

Transportation routes are generally specified for each onsite packaging system in the onsite PSSD. When routes are not specified, it is expected that shipments will be executed using the most direct route on principal site roadways as described in the TSD. Back roads, unimproved roads, and shortcuts are not to be used unless specifically authorized in the onsite PSSD, transportation plan, project plan, health and safety plan, or are required by the activity, or other improved routes are not available.

4.1 Packaging Selection and Assistance

Transportation Safety Officer

1. Determine if a DOT specification package will meet the project or facility need.

2. Determine if an existing <u>onsite</u> packaging can be used as currently authorized. See the TSD, Appendix A, for package-specific safety documents (PSSDs) and one-time requests for shipping (OTRSs) and Appendix I for special packaging authorizations (SPAs).

4.2 Non-Radioactive Hazardous Material/Waste Shipments
(7.1.3, 7.1.4, 7.1.6)

The following steps do not have to be performed in the order indicated.

<u>Authorized Shipper</u>

1. Obtain from the generator sufficient information about the material/waste to be shipped.

2. Determine if the material to be transported is a regulated hazardous material or hazardous waste.

3. Prepare the shipping documentation and initiate the appropriate shipper's checklist. See checklists on the Waste Technical Services Webpage, click CONFIRMS.

   NOTE: Persons completing the forms noted below must be trained in accordance with TFC-PLN-07 and have a current Authorized Shipper designation.

   a. Identify all hazards.

   b. Classify according to 49 CFR 173.2a.

c. Select appropriate proper shipping name consistent with the description of the material/waste and consistent with the hazards identified.

d. Select or verify that proposed packaging is appropriate for the material/waste. Verify that the package has been filled and closed according to manufacturer's instructions or facility procedure.

4. When a Hazardous Material Shipment Record (HMSR) is used, complete form BC-6002-652.

   a. When a Uniform Hazardous Waste Manifest (UHWM) is used, complete the form or, when required, the State version of this manifest. The completed manifest, and other pertinent shipping papers or instructions, must accompany the shipment.

   b. Document that the appropriate emergency response phone number is on the shipment record.

   Bill of Lading

   NOTE 1: The UHWM can be printed from the Solid Waste Information and Tracking System (SWITS) or the HQ DOE EM-11 Automated Transportation Management System (ATMS) or ordered from EPA approved vendor.

   NOTE 2: A laser generated UHWM generated by SWITS can be used for onsite shipments only.

5. Develop marking and labeling instructions for the package.

6. Provide an electronic or hard copy of the marking and labeling instructions to the appropriate-Operation's group(49 CFR 172, Subparts D and E; WAC 173-303-190) for completion.

Waste Specialists

7. Verify the requirements of the receiving facility's waste acceptance criteria have been met.

Authorized Shipper

8. Inspect the packages to ensure they are properly closed, marked, and labeled per the DOT regulations in 49 CFR 171-179. Correct deficiencies, as necessary.

9. Obtain or document radiological release before shipping, as required.

10. Contact the receiving facility and arrange for receipt of the shipment, as needed.

11. Finalize and obtain required signatures on applicable shipping papers and shipment checklist.

12. Provide the shipping paper(s) to the truck driver.

13. Complete the shipment files and submit to the appropriate project records custodian.

4.3 Radioactive Material/Waste or Mixed Waste Shipments
(7.1.1, 7.1.3, 7.1.5, 7.1.6, 7.1.7)

The following steps do not have to be performed in the order indicated.

NOTE: Materials classified as either LSA or SCO require a formal evaluation of the material to ensure that it qualifies as either LSA or SCO. This formal evaluation will be conducted in accordance with the NRC NUREG 1608, Categorizing and Transporting Low Specific-Activity Materials and Surface Contaminated Objects. The formal evaluation will be included with other transpiration safety documents and retained with other shipping records.

Onsite shipments of Type B quantities of radioactive materials must be packaged in packagings meeting the requirements of the TSD or as required in 49 CFR 173.416, must be packaged in Type B(U) or B(M) packagings in accordance with the requirements of 10 CFR Part 71.

Authorized Shipper

1. Obtain from the originator or waste generator sufficient information about the material/waste to be shipped in order to complete subsequent steps in this process.

   Determine if the material to be shipped is regulated by DOT. Use Radcalc® or other approved method to determine radiological classification.

   NOTE: Per 49 CFR 173.403 "Radioactive material means any material containing radionuclides where both the activity concentration and the total activity in the consignment exceed the values specified in the table in 173.436 or values derived according to the instructions in 173.433." The shipping documentation will have the following statement placed on it:

   "The following container(s) - _____(list numbers)_____-contain RADIOACTIVE MATERIAL at concentrations that are not regulated for transportation per DOT regulations in 49 CFR, 173.403, but are not releasable per DOE Order 5400.5."

2. If a road closure is required see Section 4.6.

Technical Waste Specialist

3. Determine if federal or state regulated waste. If the material is a waste, determine if it is a federally regulated hazardous waste (40 CFR 261) or a state-only regulated dangerous waste (WAC 173-303-070).

Authorized Shipper

4. Classify according to 49 CFR 173.2a.

5. Select appropriate proper shipping name consistent with the description of the material/waste and consistent with the identified hazards.

6. Initiate appropriate shipment checklist and PSSD/OTRS or SPA checks as applicable.

Transportation Safety Officer

7. Determine special considerations for the shipment such as route restrictions, mode of transport, road closure requirements, special vehicle requirements, safeguard and security restrictions, destination, and requested delivery dates.

Authorized Shipper

8. Verify that packaging is appropriate for the material/waste. Verify that the package has been filled and closed according to manufacturer's instructions.

9. Determine DE-Ci value for the shipment using Radcalc® as appropriate.

   NOTE 1: The following radioactive shipments are exempted from DE-Ci calculations: Radioactive empty, Limited Quantity, Low Specific Activity 1 (LSA I), and Surface Contaminated Objects I (SCO I) shipments and as approved by management.

   NOTE 2: DE-Ci determinations are not required for shipments when using ORRSRs.

Technical Waste Specialist

10. Verify the requirements of the receiving facility's acceptance criteria have been met, as appropriate.

Authorized Shipper

11. Develop marking and labeling instructions as appropriate.

    Provide an electronic or hard copy of the marking and labeling instructions to the appropriate-Operations group (49 CFR 172, Subparts D and E; WAC 173-303-190) for completion.

12. Inspect packages to ensure they are properly closed, marked and labeled. Direct the facility to correct deficiencies as necessary.

13. Cover the manufacture's name and or reporting marks on any DOT 7A Type A container and place a marking on the package that reads USA/DOT 7A/Type A/Radioactive Material/WRPS, Richland, WA.

    NOTE: It should be noted that the marking on these packages do not need to be changed when shipping between Hanford facilities on site, if the shipment of these containers is made via an exclusive use vehicle

14. Arrange for a radiological survey of the package(s) to determine that dose rate limits and removable contamination limits contained in 49 CFR 173.443 or PSSD are not exceeded.

15. Prepare appropriate shipping documentation.

    NOTE 1: The one exception from the use of the checklists is when the ORRSR is used.

    NOTE 2: Persons completing the following forms must be trained in accordance with TFC-PLN-07 and have a current Authorized Shipper designation.

    a. When a Radioactive Shipment Record (RSR) is used, prepare form A-6003-214 or A-6003-214.1.

    NOTE: For mixed waste using a UHWM a RSR is also required.

    b. When routine shipments of radioactive material are made, an Onsite Routine Radioactive Shipment Record (ORRSR) (Site Form A-6000-527 or A-6000-528) may be used.

    NOTE: ORRSRs are issued and authorized by Transportation Safety Officer.

    c. When a Uniform Hazardous Waste Manifest (UHWM) is used, complete the form.

    NOTE: A laser generated UHWM generated by SWITS may be used for onsite shipments only.

    d. An Onsite Waste Tracking Form (OWTF) A-6004-031, shall be used for shipments of waste to the Environmental Restoration and Disposal Facility (ERDF).

16. Ensure the appropriate emergency response phone number on the shipment record.

17. Arrange for an RCT to perform the appropriate radiation and /or contamination surveys of packages and conveyance.

18. Confirm that DOT annual inspections or equivalent Commercial Vehicle Safety Alliance are current for transport equipment being used.

19. Instruct the driver to load and secure the packages on the transport vehicle in accordance with applicable loading and tiedown requirements as specified in 49 CFR 393, Subpart I-Protection Against Shifting or Falling Cargo," 49 CFR 177.834(a), "General Requirements," and within safety basis documents such as SARPs, and PSSDs and TSD.

20. Prior to releasing the shipment, consider adverse weather and road conditions. See Attachment A. Shipments not meeting these conditions shall be delayed until conditions improve.

21. Advise the receiver of the estimated time of arrival; request confirmation of delivery on inter-facility transfers exceeding Type A quantities and those containing materials poisonous by inhalation hazardous (PIH).

22. Verify that the transport vehicle is placarded, as required.

23. Complete the appropriate shipment papers and checklist.

    NOTE: At this point the shipment is considered in transit and governed by DOT requirements unless directed otherwise by the facility Radiological Controls. (HNF-5183 requirements no longer apply while in transportation.)

24. Distribute copies of shipping documentation as appropriate.

25. Release shipment.

26. Complete the shipment files and submit to the appropriate project Records Custodians for review and retention in accordance with TFC-BSM-IRM_DC-C-02, "Records Management."

4.4 Onsite Routine Radioactive Shipment Records
(7.1.5)

NOTE: The one exception from the use of the checklists is when the ORRSR is used.

Generator

1. Contact the Transportation Safety Officer to request a new ORRSR.

   NOTE: Onsite Routine Radioactive Shipment Records (ORRSR or Blue Cards) are issued for <u>onsite</u> radioactive materials shipments of a routine nature with a few exceptions. Authorized areas of use are listed in the "Between" block of each ORRSR. Examples of types of shipments made on ORRSRs include the shipping of DOT excepted quantities of radioactive materials such as instruments and articles, check sources, and radioactive samples. All transfers must be done on primary onsite transfer routes or alternate routes as described in DOE/RL-2001-36, Hanford Sitewide Transportation Safety Document.

2. Complete the ORRSR form when making onsite shipments.

3. Return all ORRSRs to Transportation Safety Officer when the back of the card is full, when requested because of revision, after the void date passes; or upon determination that the ORRSR is no longer needed by the assignee or their facility.

4.5 Road Closure South of Wye Barricade
(7.1.5)

4.5.1 Shipment of "NON-DOT" Hazardous Material Containers Requiring Road Closure

This process describes shipping packages of hazardous materials that do not meet the U.S. Department of Transportation (DOT) regulations for placing them into commerce. These packages require that public access to the highways be controlled during the transport. These shipments will normally take place south of the Wye Barricade and outside the controlled areas of the 300 Area and 400 Area.

1. These shipments should be done on off-peak hours (after 1900) of vehicle traffic, including weekends (as determined by Patrol), with the exception of day shift/emergency shipments. Day shift/emergency shipments shall have the approval of the Transportation Safety Officer or designee.

2. As these shipments are not covered under the requirements of the DOT, the shipments shall be controlled under requirements specified in the appropriate Package Specific Safety Document (PSSD), Safety Analysis Reports for Packaging (SARP), Safety Evaluation for Packaging (SEP), OTRS, SPA, Certificate of Compliance (CoC), Certificate of Competent Authority (CoCA), or other approved documents. These documents should be listed in Appendix A of DOE/RL-2001-36, "Hanford Sitewide Transportation Safety Document (TSD)," or approved separately by the U.S. Department of Energy, Office of River Protection. Contact the Transportation Safety Officer for additional information.

3. If alternate routes are requested, a specific transportation plan that identifies specific barricade locations will be required and approved by the MSC Traffic Manager.

   NOTE: North of Wye road closures specifics are predicated on SARP/PSSD involved in the shipment.

4.5.2 Road Closure
(7.1.3)

NOTE: Route plan will be determined by Transportation Safety Officer and Patrol regarding any road closures.

The following steps do not have to be performed in the order indicated.

Authorized Shipper

1. If the shipment is not in compliance with the DOT requirements, identify a road closure shipment.

2. Develop the documentation necessary to ship hazardous materials or wastes; classify each package per 49 CFR 172.

3. Initiate the Road Closure Notification Checklist (Attachment B) a minimum of three working days prior to the shipment and include it in shipping documentation.

   NOTE: The three working days advanced notification is required to ensure non-Hanford business and non-DOE operating facilities on the Hanford Site have adequate time to establish alternative procedures for their employees and emergency actions systems.

5. Obtain approval for the road closure from the Transportation Safety Officer or designee.

6. Interface with the shipping facility and the receiving facility to ensure that all parties are ready to initiate and receive the shipment.

   a. With the facilities and the AUTHORIZED shipper, determine shipment date and start time.

   b. If the shipment is canceled, contact and inform every organization that was initially notified of the shipment.

Transportation Safety Officer

7. Contact Hanford Patrol and Benton County Sheriff on the day of the shipment to control access to the public roads.

Authorized Shipper

8. Prior to the shipment entering the public roadway, verify with Hanford Patrol the following

   a. For shipments originating north of the Wye Barricade (heading southbound), ensure that the shipment remains north of the Wye Barricade until Patrol or Benton County Sheriff personnel have cleared all roadways inside the barricaded area and that all non-badged traffic has been excluded.

9. Travel with shipment and act as POC for the shipment.

10. If there are problems during the execution of the shipment, notify the initiating facility and receiving facility Point of Contact (POC) of the nature of the problem and if the shipment can continue.

    a. If the shipment cannot continue, notify the Transportation Safety Officer and the Patrol Operations Center at 373-3800.

    b. Every effort should be made to move the shipment to the closest protected area where public access is restricted.

    NOTE: PSSD and OTRS sometimes restrict all traffic on roadways.

11. Notify the Patrol Operations/Benton County Sheriff that the shipment has reentered a controlled area of the Hanford Site and the public can have access to the roadway.

12. Place the Road Closure Notification Checklist into the shipment file for the shipment requiring the road closures. If several shipments are made under a single road closure, place copies of the Road Closure Checklist into each shipment file.

5.0 DEFINITIONS

Authorized shipper. An individual that has completed the required training and qualifications per (TFC-BSM-TQ-STD-05) and has been approved to ship hazardous materials by the TSO.

DOE Safety Evaluation Report (SER). This is a DOE/RL authorization that normally approves a PSSD or OTRS and may add additional restrictions and controls.

DOE pre-approved Special Packaging Authorization (SPA). This addresses specific wastes streams and provides pre-approved packaging solutions, which establish packaging and payload restrictions and transport controls for use in making onsite shipments.

Fissile material. All onsite shipments of greater than 2 grams of fissile material not packaged in packages authorized for offsite shipment are packaged in packages reviewed and approved by the approval authority and RL, when prescribed in 49 CFR 173.417. See 49 CFR 173.403. (7.1.1)

Normal form class 7 (radioactive) material. Class 7 (radioactive) material, which has not been demonstrated to qualify as "special form Class 7 (radioactive) material."

Offsite. Any area outside the boundaries of a DOE site and any area within the boundaries of a DOE site to which the public has free and uncontrolled access.

Onsite. Any area within the boundaries of a DOE site or facility to which public access is controlled (e.g., 300 area).

One-Time Request for Shipment (OTRS). A DOE approved onsite packaging exemption for a single shipment or short duration shipping campaign.

Package-specific safety document (PSSD). Includes existing onsite Safety Analysis Reports for Packaging (SARP), Safety Evaluation for Packaging (SEP), Certificate of Compliance (CoC) for Nuclear Regulatory Commission (NRC), DOT, and DOE packaging systems.

Radcalc®. A DOE approved method for determining DOT radioactive classification.

Radioactive mixed waste. Waste containing radioactive constituents as defined in 49 CFR 173.403, "Definitions," as well as hazardous/dangerous constituents as defined in 40 CFR 261, "Identification and Listing of Hazardous Waste" and/or WAC 173-303, "Dangerous Waste Regulations." The radioactive component of mixed waste is regulated under the Atomic Energy Act of 1954 (AEA). The non-radioactive hazardous component of mixed waste is regulated under the Resource Conservation and Recovery Act of 1976 (RCRA). To the extent that RCRA is not consistent with the AEA, mixed waste must be handled in accordance with the requirements of both federal laws.

Radioactive instruments and articles (radiological sources). Any manufactured instrument or article such as an instrument, clock, electronic tube or apparatus, or similar instrument or article having Class 7 (radioactive) material in gaseous or non-dispersible solid form as a component part. Items meeting this definition are transported under the provisions of 49 CFR 173.424 if items (a) through (h) are met, including packaging requirements specified in 49 CFR 173.410 and notice requirements specified in 49 CFR 173.422.

Special form class 7 (radioactive) material. Class 7 (radioactive) material, which satisfies the following conditions:

1. It is either a single solid piece or is contained in a sealed capsule that can be opened only by destroying the capsule;

2. The piece or capsule has at least one dimension not less than 5 millimeters (0.2 inch); and

3. It satisfies the test requirements of 49 CFR 173.469. Special form encapsulations designed in accordance with the requirements of 49 CRF 173.389(g) in effect on June 30, 1983 (see 49 CFR part 173, revised as of October 1, 1982), and constructed prior to July 1, 1985 and special form encapsulations designed in accordance with the requirements of 49 CFR 173.403 in effect on March 31, 1996 (see 49 CFR 173, revised as of October 1, 1995), and constructed prior to April 1, 1997, may continue to be used. Any other special form encapsulation must meet the requirements of this paragraph.

Unreviewed Safety Question for Transportation (USQ_T). Used to evaluate onsite packaging and transportation issues, new activities and modification to current processes, hardware, payload or procedures.

6.0 RECORDS

Shipment documentation shall be retained and filed as lifetime records including documentation accompanying use of SPAs, OTRSs, and PSSDs.

An auditable record of the inspection, maintenance, and certification that documents a package is properly configured and ready for use must be maintained at the packager's facility. This includes a copy of the current safety basis document (e.g., PSSD, OTRS, Safety Analysis Report for Packaging (SARP), test and evaluation report, Certificate of Compliance (CoC), or other instructions), and should also include applicable package test reports and package closure instructions. The package user must be able to document that each package's content meets the authorized payload limits specified in the safety basis, and that the packaging has been properly configured and maintained prior to use.

The following records are generated during the performance of this procedure:

Record Description	Vital Record Y/N	QA Record Y/N	QA Record Retention L/NP	NARA Retention Schedule	Other Retention Requirements	Records Custodian
Hazardous Material Shipment Records (HMSRs)	N	Y	L	ADM-17.32a	N/A	Site Services & Tank Sampling
Uniform Hazardous Waste Manifest (UHWM)	N	Y	L	ADM-17.32a	N/A	Site Services & Tank Sampling
Radioactive Shipment Records (RSR)	N	Y	L	ADM-17.32a	N/A	Site Services & Tank Sampling
Onsite Waste Tracking Form (OWTF)	N	Y	L	ADM-17.32a	N/A	Site Services & Tank Sampling
Onsite Routine Radioactive Shipment Records (ORRSR)	N	N	L	ADM-17.32A	N/A	Site Services & Tank Sampling
Radiological characterization information	N	N	NP	ENV-2.ala	N/A	Site Services & Tank Sampling
LSA/SCO Determination	N	N	NP	ENV-2.ala	N/A	Site Services & Tank Sampling
Road Closure Checklist	N	N	NP	ENV-2.ala	N/A	Site Services & Tank Sampling
Appropriate PSSD/OTRS User checklist	N	N	NP	ENV-2.ala	N/A	Site Services & Tank Sampling

The identified record custodian is responsible for record retention in accordance with TFC-BSM-IRM_DC-C-02.

7.0 SOURCES

7.1 Requirements

1. 10 CFR, Part 71, "Packaging and Transportation of Radioactive Materials."
2. 10 CFR, Part 830, "Nuclear Safety Management."
3. 49 CFR, Parts 100-199, "Hazardous Materials Regulations."
4. 49 CFR, Parts 350-399, "Federal Motor Carrier Safety Regulations."
5. DOE/RL-2001-36, "Hanford Sitewide Transportation Safety Document."
6. NRC NUREG 1608, "Categorizing and Transporting Low Specific-Activity Materials and Surface Contaminated Objects."
7. Washington Administrative Code (WAC) 173-303, "Dangerous Waste Regulations."

7.2 References

1. HNF 5183, "Radiological Controls."

2. TFC-BSM-IRM_DC-C-02, " Records Management."

3. TFC-BSM-TQ-STD-05, "Miscellaneous Professional Staff Qualification Requirements."

4. TFC-PLN-28, "Material Control and Accountability Plan."

ATTACHMENT A - ADVERSE WEATHER AND ROAD CONDITIONS

NOTE: Deviation from the following controls may be approved by Transportation Safety Officer with concurrence from DOE/RL.

The following identifies weather and road conditions that must be considered when placing an onsite hazardous material shipment into transport in accordance with this procedure and DOE/RL-2001-36 "Hanford Sitewide Transportation Safety Document." The Authorized Shipper in conjunction with Facility/Project management must ensure weather and road conditions are acceptable prior to release of any shipment and additionally meet all package authorization document (e.g., Onsite SARP, PSSD, or OTRS) controls that may contain more restrictive requirements. Weather and road conditions must be assessed prior to release of the shipment and must consider both existing conditions and conditions which are forecast for the expected transport duration. If weather conditions change adversely during transport, the shipper and/or the vehicle driver must ensure transport safety by either continuing to the destination under additional, prudent controls (e.g., with reduced speed, activated hazard lights, etc.) or to pull off the road in a safe location and secure transport operations until conditions improve.

The criteria listed below either meet or exceed conditions specified in the TSD, Chapter 8.0, Section 8.3.1.1.4.

NOTE: *Shipper see section 4.2 Item #18 for additional criteria to be followed in inclement weather.*

Weather and Related Road Conditions		
Weather Condition	**Criteria**	**Action**
Severe weather conditions	During Tornado alerts, warnings and watches, flash flood warnings, thunderstorms, blizzard conditions, etc.	During severe weather conditions, when official warnings are issued by either the Hanford Meteorological Station or by the National Weather Service, onsite transport operations will be suspended.
Lightning	Lightning strikes within a 10 mile radius	Onsite transport operations should not be conducted when lightning strikes are within a 10 mile radius of the transport route.
High Winds	Sustained wind greater than 25 miles per hour.	Onsite transport operations should not be conducted in conditions of sustained winds greater than 25 miles per hour.
Ice and Snow	Road surface covered with ice or packed snow.	Onsite transport operations will not be conducted over roadways covered with ice or packed snow. Intermittent patches of ice and snow may be considered with speeds and routes adjusted accordingly.
Heavy Rain, Freezing Rain or Hail	Light rain < 0.1 in/hr. Medium rain < 0.3 in/hr. Heavy rain > 0.3 in/hr. Hail diameter > 0.25 in. Snow pellet diameter >0.25 in	Onsite transport operations will not be conducted in heavy rain conditions of greater than 0.3 in/hr or in hail or snow pellet conditions. It is the shipper's discretion to restrict transport operations under medium and light rain conditions.
Fog, Smoke or Blowing Dust	Fog, smoke and blowing dust conditions with visibility of less than 200 m (0.125 mile).	Onsite transport operations will not be conducted in fog, smoke or blowing dust conditions where visibility is less than 200 m (0.125 mile).
Freezing Temperatures	Low temperatures < 4 °C (40 °F).	If the ambient temperature is 4 °C (40 °F) or less as determined at the Hanford Weather Station prior to shipment, personnel shall drive the shipping route to ensure there is no appreciable ice or snow on the road immediately prior to shipment. If it is determined that adequate traction exists, the shipment may be made.

ATTACHMENT B – ROAD CLOSURE NOTIFICATION CHECKLIST

TFC-OPS-WM-C-19
ROAD CLOSURE NOTIFICATION CHECKLIST

Date of Shipment: _____Originating Facility:_____
HAZMAT
Shipper:_____Destination:_____
Shipment Number:_____Requestor:_____
Permission received from DOE-RL? _____Yes
Date:_____
Shipment placed on integrated schedule? _____Yes _____No

Phone No.	Organization	Person Contacted	Time/Date Notified	Shipment Canceled Notification
376-4530	South Area Secuirty Representative			
373-3800	Patrol Operations Center			
376-2900	Occurrence Notification Center (ONC)			
735-6555 Ext 3852	Benton County Sheriff			
373-3320	Fire Department, as required			
	300 Area WCH			
376-0456	FFTF Control Room			
377-2880	Energy Northwest Security			
371-7042	300 Area PNNL			
372-9504 Or 430-6784	TEDF Operations Manager			

Date of Shipment:

_____/_____ Date:_____
Print Name Signature

Save

Problem Evaluation Request (PER)

WRPS-PER-2009-0010
Closed 02/02/2009 11:00

PER No	Date of Discovery	Time of Discovery (24:00)	Project
WRPS-PER-2009-0010	01/05/2009	09:45	Human Resources

Location

All Tank Farms

How Was Problem Discovered

Field Observation

Description of Concern or Problem

while performing work in aP-farm employee found a unsafe condition in farm that had to with electrical shock hazard. employee notified shift office of a unsafe condition in farm. shift manager would not honor a STOP WORK ON ELECTRICAL SHOCK HAZARD IN FARM.BECAUSE OF HIS OWN PERSONNEL REASONS INSTEAD OF FOLLOWING THE HANFORD SITE " STOP WORK" POLICY. STILL NO STOP WORK ADDRESSED

Requirement Not Satisfied	Source Document Number
FOLLOW STOP WORK PROCEDURE TFC-POL-32,32 REV A	SAME AS ABOVE
Equipment Identification Number	**System Identification**

Immediate actions Taken or Planned

TRIED TO ISSIUE A STOP WORK FOR ELECTRICAL SHOCK

Recommended Corrective actions

ISSIUE A STOP WORK UNTIL THE CABINETTES HAVE BEEN IDENIFIED AS BEEING CHECKED BY ELECTRICIAN AND DOCUMENT . HAVE SHIFT MANAGER AND HIS BOSS TO HONOR STOP WORK BY EMPLOYEE'S AS PER THE STOP WORK POLICY FOR THE HANFORD CONTRACTOR'S

Originator Contact

SINCE STOP WORK POLICY WAS NOT HONORED EMPLOYEE FEELS THAT REPRISAL OR RETALIATION MIGHT HAPPEN SINCE THE SHIFT MANAGER AND HIS BOSS DID NOT HONOR MY STOP WORK .

Originators Name	Originators ID	Originators Phone	Date Initiated
Roberson, William L L	H0002204	(509) 373-4449	01/05/2009

SHIFT OPERATIONS REVIEW

Title

Exposed electrical conductors - stop work issues

How Discovered	Agency
self-ID prior to event	

Reportability	SSC Operability	Operability Review	Comp Measures Req
Non-Reportable	N/A	N/A	

Describe actions Taken or Recommended

No plant TSR or environmental impacts. Current Red arrow exists that restricts opening of electrical cabinets/enclosures unless it has been verified to not contain exposed electrical conductors unless accompanied by a person qualified to work within these spaces.

SO Reviewer Name	SO Reviewer ID	SO Reviewer Phone	SO Review Date
Strasser, David W	H0075556	(509) 373-2689	01/06/2009

SCREENING

PER Significance Level	
TUF	

Independent Assessment Review	Occurrence Report Number	Externally Identified	

No		No	
Assigned Responsible Manager	**Facilities Rep / SSO**	**Safety Management Rep**	
Kennedy, Edward E			
Program		**Safety Management Program**	
• N/A		• Human Factors	

PER Screening Comments

FURTHER EVALUATION: Determine if this PER should be screened as "Invalid" by the PER Screening Team and this concern handled as an Employee Concern within the ECP.
cc: Tino Maciuca, Sandra Hyman, Brad Brannan
(Nancy Brown 01/06/09)

RESCREEN REQUEST (F/E) Blank, Betsy S acting as Kennedy, Edward E 01/07/2009 1054

ECP has accepted this as an employee concern and will continue through resolution of the issues. This PER should be categorized as a TUF and assigned to Ed Kennedy. Ed Kennedy met with the employee, discussed the path forward, and is ready to address the issue in the PER.

RE-SCREENING COMMENTS: Change from F/E to TUF. Ed Kennedy said this concern is not confidential and he would like to have it tracked in the PER system.
cc: Brad Brannan, Pete Owen
(Nancy Brown 01/22/09)

Causal Code

MGT/Comm/Train	**Human Performance**	**GEMS**	**Equip/Eng/Other**
Failed Barrier	**ORPS Code**	**Functional Area**	**Work Process**
	Not Applicable	Safety Culture	• Electrical Safety • Safe Work Environment • Worker Assessment
ISMS	**Consequence Code**		
Identify and analyze hazards	• Safety Concerns - Safety concerns, suggestions, and potential safety issues • Stop Work Authority - Employee "Stop Work Authority" used because of actual or potential unsafe conditions.		
PER Screening Chair	**PER Screening Chair ID**	**PER Screening Chair Phone**	**PER Screening Date**
Brown, Nancy L	H0088797	(509) 373-0992	01/06/2009

PAAA REVIEW

PAAA Screening	**PAAA Codes**	**Function Codes**	
PAAA, Non-NTS Reportable	• 10 CFR 830.122 (c)(3)	• Corrective Action Program	
NTS Report Number	**NTS Report Date**		
Repetitive / Recurrent	**Programmatic**	**Intentional Violation / Misrepresentation**	
No	No	No	

PAAA Screening Comments

PAAA Reviewer Name	**PAAA Review Date**	
Anderson, Craig E	01/19/2009	
PAAA Approver Name	**PAAA Approve Date**	

Anderson, Craig E	01/19/2009		

SENIOR MANAGEMENT REVIEW/CONCURRENCE

TF Operations Morning Leadership Call

TF Operations Morning Leadership Call is no longer required.

Instructions for Responsible Manager

Complete action and enter statement on TUF tab. 'Complete' the task in E-STARS and 'Close' in accordance with TFC-ESHQ-Q_C-C-01, Problem Evaluation Request. .

Senior Management	Sr Mgmt ID	Sr Mgmt Phone	Sr Mgmt Review Date
Brown, Nancy L	H0088797	(509) 373-0992	01/26/2009

Track Until Fixed (TUF)

Action Taken

The ECP Manager interviewed approximately 15 individuals involved or closely assiciated with Mr. Roberson's attempt to use his Stop Work authority. It was generally concluded by all that Mr. Roberson's Stop Work request was not fully honored nor implemented. There was some push back and defensiveness on the part of Shift Management as there was already a Red Arrow in the Shift Manager's log that looked like it addressed exactly the same concern that Mr. Roberson stated and they did not want to have 2 Stop Works or Red Arrows addressing the same issues. However, during the discussions associated with the original Red Arrow and the corrective actions agreed to for resolving the Rad Arrow, it was discovered that the corrective actions had not been implemented and completed as expected. There was also a concern about those individuals who may not have heard the Red Arrow conditions (in training, on PTB, on Short Term Disability), which could put those individuals at some risk. These issues may not have been identified for some time if Mr. Roberson had not raised his concerns. Discussions with numerous HAMTC Safety Reps, Bargaining Unit Stewards, line management, and various craft personnel revealed that many are not comfortable in raising Stop Works to the Shift Managers, as they feel that there would be push back, defensiveness, and just not honoring the Stop Work request. Discussions with Senior Management resulted in a management clarification and expectation of the Stop Work process. It is expected that the concerned individual will work on the Stop Work issues with their appropriate line management and the HAMTC Safety Reps and that the Shift Office will accept the Stop Work without being defensive or pushing back. Each Shift Manager has been instructed and mentored on how they should respond when a Stop Work is requested. Individuals will be treated with respect and dignity and all will treat each other professionally throughout the process. This result has come about from listening to the feedback from interested parties and management stepping up and responding to those issues in a positive and proactive manner. This resolution was discussed thoroughly with the PER originator who agreed that he was pleased with the outcome and the clarification of expectations for the Stop Work process and was agreeable in closing out this PER.

ATTACHMENTS

Link to PER

AUDIT HISTORY

Change Date	Auditor	Comments
01/07/2009 07:56	Owen, Annette	Responsible Manager Task Launched by Owen, Annette
01/19/2009 07:02	Anderson, Craig E	PAAA Screening Changed PAAA Codes Changed PAAA Function Codes Changed
01/21/2009 08:33	Owen, Annette	'PER Screening Comments' was changed.
01/22/2009 14:04	Brown, Nancy L	'PER Significance Level' was changed from Further Evaluation to TUF. 'PER Screening Comments' was changed. 'Selected Consequence Codes' have changed.
01/26/2009 08:45	Brown, Nancy L	'Instructions for Responsible Manager' was changed.

-- End of Report --
02/02/2009 11:15 AM

Task# WRPS-PER-2009-0010			
E-STARS[R] Report Task Detail Report 02/02/2009 1115			
TASK INFORMATION			
Task#	WRPS-PER-2009-0010		
Subject	TUF; Exposed electrical conductors - stop work issues		
Parent Task#		Status	CLOSED 02/02/2009
Reference		Due	05/26/2009
Originator	^PER Coordinator	Priority	Medium
Originator Phone		Category	PER
Origination Date	01/05/2009 1426	Generic1	None
Remote Task#		Generic2	None
Deliverable	PER Review	Generic3	None
Class	None	View Permissions	Global
Instructions	*No Instructions*		
ROUTING LISTS			
1	Responsible Manager		Inactive
	Complete action and enter statement on TUF tab. 'Complete' the task in E-STARS and 'Close' in accordance with TFC-ESHQ-Q_C-C-01, Problem Evaluation Request.		
	• Kennedy, Edward E - Assign - Completed with comments - 01/07/2009 1054 *Instructions:*		
	• Kennedy, Edward E - Assign - Completed - 01/07/2009 1054 *Instructions:* Did you contact the originator about the PER? Document your contact in the response window.		
	• Kennedy, Edward E - Assign - Completed with comments - 01/20/2009 1303 *Instructions:* Did you contact the originator about the PER? Document your contact in the response window as requested by the second "Assign" role on the routing list.		
	• ^PER Screening(Brown, Nancy L) - Assign - Completed - 01/22/2009 1404 *Instructions:*		
	• ^Mgr Review(Brown, Nancy L) - Review - Concur - 01/26/2009 0841 *Instructions:*		
	• Kennedy, Edward E - Assign - Completed - 02/02/2009 1041 *Instructions:*		
	• Kennedy, Edward E - Close - Closed - 02/02/2009 1046 *Instructions:*		

Task# WRPS-PER-2009-0010			
2	Review Initial PER		Inactive
	Review New PER		
	• ^SO(Strasser, David W) - Review - Concur - 01/06/2009 0739 *Instructions:*		
	• ^PER Screening(Brown, Nancy L) - Review - Concur - 01/06/2009 1401 *Instructions:*		
	• ^Mgr Review(Owen, Annette) - Review - Concur - 01/07/2009 0756 *Instructions:*		
ATTACHMENTS			
Attachments	1. Link to PER		
COLLABORATION			
COMMENTS			
Poster	Kennedy, Edward E (Blank, Betsy S) - 01/07/2009 1001		
	Completed		
	ECP has accepted this as an employee concern and will continue through resolution of the issues. This PER should be categorized as a TUF and assigned to Ed Kennedy.		
Poster	Kennedy, Edward E (Blank, Betsy S) - 01/20/2009 0101		
	Completed		
	Ed Kennedy met with the employee, discussed the path forward, and is ready to address the issue in the PER.		
Poster	Kennedy, Edward E - 01/26/2009 0401		
	I have communicated the results of the interviews and corrective actions put into place by senior management for expectations on the Stop Work process with the PER originator. He was agreeable with the results and actions put into place to address his issues.		
TASK DUE DATE HISTORY			
Modified	01/26/2009 0843 - ^PER Coordinator (Brown, Nancy L)	New Due Date	05/26/2009 1630
Modified	01/07/2009 0756 - ^PER Coordinator	New Due Date	01/14/2009 1630
Modified	01/07/2009 0756 - ^PER Coordinator	New Due Date	01/14/2009 1630
Modified	01/05/2009 1426 - ^PER Coordinator	New Due Date	01/07/2009 1630
SUB TASK HISTORY			

Task# WRPS-PER-2009-0010
No Subtasks
-- end of report --

Save

Problem Evaluation Request (PER)

WRPS-PER-2009-0036
In Process/Work

PER No	Date of Discovery	Time of Discovery (24:00)	Project
WRPS-PER-2009-0036	01/07/2009	10:00	Proj Construction-BO

Location

242A

How Was Problem Discovered

Maintenance Activity

Description of Concern or Problem

During the performance of a PM (on PI-1-4) on the 242-A K1 ventilation system, work was stopped because the labels in the field did not match the drawing. When the K1 ventilation upgrades were performed an updated set of drawings was created that changed how the equipment was identified. Previously the drawing note stated that all equipment instrument numbers are prefixed by "K1", the new drawings identification scheme has the "Equipment abbreviation" first then the system designation (e.g. K1). While the new equipment might have been properly labeled the old equipment was not re-labeled nor was CHAMPS updated, giving us equipment in the field, and equipment in CHAMPS that do not match the drawings.

In addition the "New Equipment Identification" convention on drawing H-2-830594 does not match the Labeling Standard on H-2-98986 for the evaporator per ENG-STD-12.

Requirement Not Satisfied	Source Document Number
ENG-STD-12	

Equipment Identification Number	System Identification
K1-PI-1-4	Ventilation (General)

Immediate actions Taken or Planned

Provided the instrument techs performing the PM with the old drawings that show that the K1 prefix was the correct label prior to the drawings being updated.

Recommended Corrective actions

Projects should update the drawings with corrected EINs (to match the drawing ID) and re-label in the field or put a note in the drawings explaining that the component EINs will be updated to match the new equipment identification scheme during the Phase II HVAC upgrades. Not sure how to address the issue of the new convention not matching the standard without re-labeling all the components. I like the convention but it does not match the standard.

Originator Contact

I would like to review the the corrective actions at closure to ensure they were effective

Originators Name	Originators ID	Originators Phone	Date Initiated
Templeton, Andrew M	H0091402	(509) 373-5589	01/07/2009

SHIFT OPERATIONS REVIEW

Title

PMs 242-A K1 ventilation system, work was stopped because the labels in the field did not match the drawing.

How Discovered	Agency
self-ID prior to event	

Reportability	SSC Operability	Operability Review	Comp Measures Req
Non-Reportable	N/A	N/A	

Describe actions Taken or Recommended

No immediate BO SO actions identified

SO Reviewer Name	SO Reviewer ID	SO Reviewer Phone	SO Review Date
Wallgren, Carl B	H0099480	(509) 373-2689	01/07/2009

SCREENING

PER Significance Level	
PER with Resolution	

Independent Assessment Review	Occurrence Report Number	Externally Identified	

No		No	
Assigned Responsible Manager	**Facilities Rep / SSO**	**Safety Management Rep**	
Knight, Mark A			
Program		**Safety Management Program**	
• N/A		• Engineering Configuration Management	

PER Screening Comments

PER w/ Res with informal Apparent Cause Analysis. Apparently the drawing is still in Project Status, however, it still should be in compliance with ENG-STD-12
cc: Mark Knight, Edgar Martinen
(Nancy Brown 01/08/09)

RESCREEN (PRIOR to LAUNCH) Subject: PER-2009-0036

Contrary to the PER Screening Comments the drawing that is the subject of the PER is not in Project Status, it is in Facility Status as of 10/14/08 via HDCS-CN-39311.

The PER should be assigned to the 242-A Facility or System Engineering Manager, as the Project is complete, Formally Accepted and Turned-over to Operations/Engineering.

Steve Briggs

PER RE-SCREEN COMMENTS: PER w/ Res with informal Apparent Cause Analysis. Contact PER originator. cc: Rebecca Raven (Nancy Brown 01/12/09)

Causal Code			
A4B1C01	Management Problem Management Methods LTA Management policy guidance/expectations not well-defined, understood or enforced		
MGT/Comm/Train	**Human Performance**	**GEMS**	**Equip/Eng/Other**
Failed Barrier	**ORPS Code**	**Functional Area**	**Work Process**
	Not Applicable	Operations	• Configuration Control • Engineering Evaluation • Equipment and Piping Labeling
ISMS	**Consequence Code**		
Perform work within the controls	• Configuration Management - Documentation does not equal field condition • Engineering Requirement - Lack of/not adequately implemented or identified requirement • Labeling - Drawings - Equipment labeling drawing discrepancies • Procedure - Administrative - Procedure ambiguous, in error, could not be worked, was not used		
PER Screening Chair	**PER Screening Chair ID**	**PER Screening Chair Phone**	**PER Screening Date**
Brown, Nancy L	H0088797	(509) 373-0992	01/08/2009
PAAA REVIEW			
PAAA Screening	**PAAA Codes**	**Function Codes**	
PAAA, Non-NTS Reportable	• 10 CFR 830.122 (d)(1)	• Configuration Management • Procedure Quality	
NTS Report Number	**NTS Report Date**		

Repetitive / Recurrent	**Programmatic**	**Intentional Violation / Misrepresentation**	
No	No	No	

PAAA Screening Comments

PAAA Reviewer Name	**PAAA Review Date**	
Anderson, Craig E	01/08/2009	
PAAA Approver Name	**PAAA Approve Date**	
Anderson, Craig E	01/12/2009	

SENIOR MANAGEMENT REVIEW/CONCURRENCE

TF Operations Morning Leadership Call

TF Operations Morning Leadership Call is no longer required.

Instructions for Responsible Manager

Review the PER Screening Tab and Senior Manager Review for requested data. Complete the task in E-STARS in accordance with TFC-ESHQ-Q_C-C-01, and TFC-ESHQ-Q_ADM-C-12 Apparent Cause Analysis & Corrective Action Planning.

Senior Management	**Sr Mgmt ID**	**Sr Mgmt Phone**	**Sr Mgmt Review Date**
Owen, Annette	H0054042	(509) 372-0533	01/13/2009

CAUSE ANALYSIS

Description of Occurrence

During the performance of a PM (on PI-1-4) on the 242-A K1 ventilation system, work was stopped because labels in the facility did not match the drawing.

Extent of Condition

A review of the ventilation systems at the 242-A Evaporator was performed to determine the extent of condition for this problem. There are as many as three (3) different labeling standards that have determined the EINs and equipment labeling requirements for ventilation equipment in the 242-A facility. The three (3) separate/different labeling standards are H-2-830594, Sht. 1, H-2-98986, Sht. 1, TFC-ENG-STD-12 and the original B-100 original construction labeling criteria. At present the plastic, or metal labels on old and new ventilation equipment have been changed to comply with the requirements of TFC-ENG-STD-12, except the EIN format is not as defined in the standard. As of now, the EIN format for the K1 and K2 ventilation equipment is a combination of original B-100 construction labeling criteria, H-2-830594, Sht. 1 and H-2-98986, sht. 1, TFC-ENG-STD-12 labeling criteria.

A review of drawings for other systems in the 242-A Evaporator indicated that the P&IDs and the field generally are in agreement; this issue is associated with the ventilation systems at 242-A.

Safety Significance

The ventilation systems at the 242-A Evaporator are classified as general service equipment. Impacts associated with the condition identified by this PER is that if an EIN in the facility does not match the EIN on a drawing, trouble shooting, performance of procedures and periodic maintenance to components could be compromised. In addition the integrity of Lock and Tag planning and implementation could be compromised if EINs on equipment do not match EINs on engineering documentation. Lock & tag is relied upon to ensure worker safety.

Generic Implications

Remedial Corrective Action

Provided the instrument techs performing the PM with old drawings that show that the K1 prefix was the correct EIN prior to the drawings being updated.

Causal Analysis, Apparent Cause and/or Root Cause Analysis

Apparent Cause analysis: The apparent cause of the condition identified by this PER is A4 Management Problem, B1 Management Methods LTA, C01 Management policy guidance/expectations not well-defined, understood or enforced.

There are as many as three (3) different labeling standards that have determined the EINs and equipment labeling requirements for ventilation equipment in the 242-A facility. The three (3) separate/different labeling standards are H-2-830594, Sht. 1, and H-2-98986, Sht. 1; TFC-ENG-STD-12; and the original B-100 original construction labeling criteria. At present the plastic, or metal labels on old and new ventilation equipment have been changed to comply with the requirements of TFC-ENG-STD-12, except the EIN format is not as defined in the standard. As of now, the EIN format for

the K1 and K2 ventilation equipment is a combination of original B-100 construction labeling criteria, H-2-830594, Sht. 1 and H-2-98986, sht. 1, and TFC-ENG-STD-12 labeling criteria. This demonstrates a lack of managing/maintaining and enforcing configuration control with respect to equipment indentification.

During the 2007/2008 K1 and K2 system ventilation upgrades, none of the existing ventilation equipment that was retained was relabeled per the direction provided on drawing H-2-830594, sht. 1. The HVAC upgrades project determined that the existing equipment should retain existing EINs to minimize the impact on existing drawings, procedures and other documentation. The HVAC upgrades project also determined that compliance with the requirements of TFC-ENG-STD-12 was not practical since most of the existing equipment in the facility was not in compliance with it.

Until a comprehensive effort can be made to change all of the EINs in the facility to one single EIN format, the existing EINs in the facility (and on engineering documentation and administrative documentation) shall continue to be used.

Three corrective actions will be launched to correct this issue.

CORRECTIVE ACTIONS

Actionee	Action Due Date	E-STARS Number
Harty, William M	10/05/2009	WRPS-PER-2009-0036.1

Action

Perform a field walkdown of the K1 and K2 ventilation systems and associated documentation (i.e. drawings & procedures) to determine the scope of required changes.

Corrective Action Attachments

- FW_ Request for due date extension for WRPS-PER-2009-0036.msg
- Link to PER
- WRPS-PER-2009-0036 E-Mail to PER Originator.msg

Actionee	Action Due Date	E-STARS Number
Nelson, Eric A	10/22/2009	WRPS-PER-2009-0036.2

Action

Create a standard for equipment identification numbers for the 242-A Evaporator.

Deliverable: Copy of the new standard or revision to existing labeling standards to include the 242-A Evaporator.

Corrective Action Attachments

- FW_ Request for due date extension for WRPS-PER-2009-0036.msg
- Link to PER
- WRPS-PER-2009-0036 E-Mail to PER Originator.msg

Actionee	Action Due Date	E-STARS Number
Raven, Rebecca P	01/21/2010	WRPS-PER-2009-0036.3

Action

Implement required changes to ensure that the K1 and K2 ventilation systems labeling and associated documentation (i.e. drawings & procedures) agree.

Corrective Action Attachments

- FW_ Request for due date extension for WRPS-PER-2009-0036.msg
- Link to PER
- WRPS-PER-2009-0036 E-Mail to PER Originator.msg

ATTACHMENTS

FW_ Request for due date extension for WRPS-PER-2009-0036.msg

Link to PER

WRPS-PER-2009-0036 E-Mail to PER Originator.msg

AUDIT HISTORY

Change Date	Auditor	Comments
01/08/2009 14:03	Brown, Nancy L	'PER Screening Comments' was changed.
01/08/2009 16:10	Owen, Annette	'PER Screening Comments' was changed.
01/12/2009 11:39	Brown, Nancy L	'PER Significance Level' was changed from PER with Resolution to Further Evaluation. 'Assigned Responsible Manager' was changed. 'PER Screening Comments' was changed. 'Functional Area' was changed.

		'Selected Consequence Codes' have changed.
01/12/2009 13:21	Brown, Nancy L	'PER Significance Level' was changed from Further Evaluation to PER with Resolution. 'PER Screening Comments' was changed.
01/13/2009 08:18	Owen, Annette	Responsible Manager Task Launched by Owen, Annette
06/03/2009 10:22	Glaman, Linda R	Corrective actions Launched by Glaman, Linda R

-- End of Report --
07/09/2009 07:43 AM

Task# WRPS-PER-2009-0036

E-STARS[R] Report
Task Detail Report
07/09/2009 0744

TASK INFORMATION			
Task#	WRPS-PER-2009-0036		
Subject	RES; PMs 242-A K1 ventilation system, work was stopped because the labels in the field did not match the drawing.		
Parent Task#		**Status**	Open
Reference		**Due**	01/31/2010
Originator	^PER Coordinator	**Priority**	Medium
Originator Phone		**Category**	PER
Origination Date	01/07/2009 1100	**Generic1**	None
Remote Task#		**Generic2**	None
Deliverable	PER Review	**Generic3**	None
Class	None	**View Permissions**	Global
Instructions	*No Instructions*		

ROUTING LISTS

1	Corrective actions Routing Lis	Active
	To launch Corrective actions.	
	• ^PER CAs - Assign - Awaiting Response - Due Date - 01/31/2010 0000 *Instructions:*	
2	Responsible Manager	Inactive
	Perform a technical review of the resolution.	
	• Knight, Mark A - Assign - Completed with comments - 05/14/2009 1817 *Instructions:* ↳ *Routing List:* Route List - Inactive *Instructions:* • Dale, Rob - Assign - Completed with comments - 05/14/2009 1801	
	• Knight, Mark A - Assign - Withdrawn - 02/19/2009 1241 *Instructions:* Did you contact the originator about the PER? Document your contact in the response window.	
	• ^Independent Assessment Review(Penick, Lee R) - Review - Concur - 05/26/2009 1454 *Instructions:*	
3	Review Initial PER	Inactive
	Review New PER	
	• ^SO(Wallgren, Carl B) - Review - Concur - 01/07/2009 1736 *Instructions:*	
	• ^PER Screening(Brown, Nancy L) - Review - Concur - 01/08/2009 1334 *Instructions:*	
	• ^PER Screening(Brown, Nancy L) - Review - Concur - 01/12/2009 1321 *Instructions:* Return to Screening as assigned resp. manager did not agree with assignment to him.	
	• ^Mgr Review(Owen, Annette) - Review - Concur - 01/13/2009 0818	

Task# WRPS-PER-2009-0036

	Instructions:
ATTACHMENTS	
Attachments	1. FW_ Request for due date extension for WRPS-PER-2009-0036.msg 2. Link to PER 3. WRPS-PER-2009-0036 E-Mail to PER Originator.msg
COMMENTS	
Poster	^PER Coordinator (Owen, Annette) - 02/19/2009 1243
	1st extension to 5/14/09 per attached e-mail request. (NO CAs)
	The 242-A Evaporator is scheduled to commence operations for the 09-01/-9-02 hot run campaign on 03/04/09. Before campaign and during campaign activities required to support this campaign preclude the resolution of this PER by the due date of 02/19/09. The campaign is expected to run from 03/04/09 through 04/17/09. A due date extension to 05/14/09 is requested to provide time after the campaign to resolve this PER. Mike Harty for Mark Knight
Poster	Dale, Rob (Bragg, David A) - 05/14/2009 1801
	Completed
	The issue identified in this PER was evaluated and three corrective actions will be launched to provide resolution. The PER originator was provided a status on the corrective actions to be launched by e-mail n 05/14/09.
Poster	Knight, Mark A (Bragg, David A) - 05/14/2009 1817
	Completed
	The issue identified in this PER was evaluated and three corrective actions will be launched to provide resolution. The PER originator was provided a status on the corrective actions to be launched by e-mail on 05/14/09.

TASK DUE DATE HISTORY

Modified	06/03/2009 1022 - ^PER Coordinator	**New Due Date**	01/31/2010 0000
Modified	02/19/2009 1241 - ^PER Coordinator (Owen, Annette)	**New Due Date**	05/19/2009 1630
Modified	01/13/2009 0818 - ^PER Coordinator	**New Due Date**	02/21/2009 1630
Modified	01/13/2009 0818 - ^PER Coordinator	**New Due Date**	02/21/2009 1630
Modified	01/07/2009 1100 - ^PER Coordinator	**New Due Date**	01/09/2009 1630

SUB TASK HISTORY

Subtask#	WRPS-PER-2009-0036.1				
Subject	WRPS-PER-2009-0036; RES; Perform a field walkdown of the K1 and K2 ventilation systems and associated documentation (i.e. drawings & procedures) to de				
Originator	^PER CAs				
	Routing List	Corrective Action			
		Assignee	Harty, William M	**Response**	
		Assignee	Knight, Mark A	**Response**	
Subtask#	WRPS-PER-2009-0036.2				
Subject	WRPS-PER-2009-0036; RES; Create a standard for equipment identification numbers for the 242-A Evaporator. Deliverable: Copy of the new standard or				
Originator	^PER CAs				
	Routing List	Route List			

Task# WRPS-PER-2009-0036					
		Assignee	Stickney, Randall G	**Response**	
	Routing List	Corrective Action			
		Assignee	Nelson, Eric A	**Response**	
		Assignee	Knight, Mark A	**Response**	
Subtask#	WRPS-PER-2009-0036.3				
Subject	WRPS-PER-2009-0036; RES; Implement required changes to ensure that the K1 and K2 ventilation systems labeling and associated documentation (i.e. drawi				
Originator	^PER CAs				
	Routing List	Corrective Action			
		Assignee	Raven, Rebecca P	**Response**	
		Assignee	Knight, Mark A	**Response**	

-- end of report --

Message

From: Bragg, David A

Sent: Thursday, February 19, 2009 12:36 PM

To: Owen, Annette

Subject: FW: Request for due date extension for WRPS-PER-2009-0036

Annette,

I spoke with Mike Harty, who approved this extension acting for Mark Knight.

Thanks,

David Bragg
Base Operations Maintenance Engineering

From: Dale, Robert N (Rob)
Sent: Thursday, February 19, 2009 11:50 AM
To: Owen, Annette
Cc: Harty, W M Jr (Mike); Bragg, David A; Roberts, Mark A; Knight, Mark A; Templeton, Andrew M
Subject: Request for due date extension for WRPS-PER-2009-0036

The 242-A Evaporator is scheduled to commence operations for the 09-01/-9-02 hot run campaign on 03/04/09. Before campaign and during campaign activities required to support this campaign preclude the resolution of this PER by the due date of 02/19/09. The campaign is expected to run from 03/04/09 through 04/17/09. A due date extension to 05/14/09 is requested to provide time after the campaign to resolve this PER.

R. N. Dale
DST System Engineering

Message

From: Bragg, David A

Sent: Thursday, May 14, 2009 5:58 PM

To: Templeton, Andrew M

Cc: Roberts, Mark A

Subject: WRPS-PER-2009-0036 Status

Andrew,

You originated WRPS-PER-2009-0036 (RES), which cites the following concern or problem:

During the performance of a PM (on PI-1-4) on the 242-A K1 ventilation system, work was stopped because the labels in the field did not match the drawing. When the K1 ventilation upgrades were performed an updated set of drawings was created that changed how the equipment was identified. Previously the drawing note stated that all equipment instrument numbers are prefixed by "K1", the new drawings identification scheme has the "Equipment abbreviation" first then the system designation (e.g. K1). While the new equipment might have been properly labeled the old equipment was not re-labeled nor was CHAMPS updated, giving us equipment in the field, and equipment in CHAMPS that do not match the drawings.

In addition the "New Equipment Identification" convention on drawing H-2-830594 does not match the Labeling Standard on H-2-98986 for the evaporator per ENG-STD-12.

Three corrective actions will be launched to resolve this matter.

1) Perform a field walkdown of the K1 and K2 ventilation systems and associated documentation (i.e. drawings & procedures) to determine the scope of required changes (M Harty)

2) Create a standard for equipment identification numbers for the 242-A Evaporator (E. Nelson)

3) Implement required changes to ensure that the K1 and K2 ventilation systems labeling and associated documentation (i.e. drawings & procedures) agree (R. Raven)

Thank you,

David Bragg
Base Operations Maintenance Engineering

Task# WRPS-PER-2009-0036.1

E-STARS[R] Report
Task Detail Report
07/09/2009 0745

TASK INFORMATION			
Task#	WRPS-PER-2009-0036.1		
Subject	WRPS-PER-2009-0036; RES; Perform a field walkdown of the K1 and K2 ventilation systems and associated documentation (i.e. drawings & procedures) to de		
Parent Task#	WRPS-PER-2009-0036	**Status**	Open
Reference	WRPS-PER-2009-0036	**Due**	10/11/2009
Originator	^PER CAs	**Priority**	Medium
Originator Phone		**Category**	PER
Origination Date	06/03/2009 1022	**Generic1**	None
Remote Task#		**Generic2**	None
Deliverable	PER Review	**Generic3**	None
Class	None	**View Permissions**	Global
Instructions	*No Instructions*		

ROUTING LISTS

1	Corrective Action	Active
	Perform a field walkdown of the K1 and K2 ventilation systems and associated documentation (i.e. drawings & procedures) to determine the scope of required changes. RESPONSIBLE MANAGER: When this corrective action is complete, enter a closure statement in E-STARS and close the E-STARS subtask. Refer to the Problem Evaluation Request procedure TFC-ESHQ-Q-C-C-01, Section 4.4 for closure documentation requirements	
	• Harty, William M - Assign - Awaiting Response - Due Date - 10/05/2009 0000 *Instructions:*	
	• Knight, Mark A - Review - Awaiting Response - Due Date - 10/09/2009 0000 *Instructions:*	

ATTACHMENTS

Attachments	1. FW_ Request for due date extension for WRPS-PER-2009-0036.msg 2. Link to PER 3. WRPS-PER-2009-0036 E-Mail to PER Originator.msg

COMMENTS

No Comments

TASK DUE DATE HISTORY

Modified	06/03/2009 1022 - ^PER CAs	**New Due Date**	10/11/2009 0000
Modified	06/03/2009 1022 - ^PER CAs	**New Due Date**	01/31/2010 0000

SUB TASK HISTORY

No Subtasks

-- end of report --

Task# WRPS-PER-2009-0036.2

E-STARS[R] Report
Task Detail Report
07/09/2009 0746

TASK INFORMATION			
Task#	WRPS-PER-2009-0036.2		
Subject	WRPS-PER-2009-0036; RES; Create a standard for equipment identification numbers for the 242-A Evaporator. Deliverable: Copy of the new standard or		
Parent Task#	WRPS-PER-2009-0036	**Status**	Open
Reference	WRPS-PER-2009-0036	**Due**	10/28/2009
Originator	^PER CAs	**Priority**	Medium
Originator Phone		**Category**	PER
Origination Date	06/03/2009 1022	**Generic1**	None
Remote Task#		**Generic2**	None
Deliverable	PER Review	**Generic3**	None
Class	None	**View Permissions**	Global
Instructions	*No Instructions*		

ROUTING LISTS

1	Corrective Action	Active
	Create a standard for equipment identification numbers for the 242-A Evaporator. Deliverable: Copy of the new standard or revision to existing labeling standards to include the 242-A Evaporator. RESPONSIBLE MANAGER: When this corrective action is complete, enter a closure statement in E-STARS and close the E-STARS subtask. Refer to the Problem Evaluation Request procedure TFC-ESHQ-Q-C-C-01, Section 4.4 for closure documentation requirements	
	• Nelson, Eric A - Assign - Delegated - 07/08/2009 1310 *Instructions:* ↳ *Routing List:* Route List - Inactive *Instructions:* • Faust, Gary L - Assign - Decline With Comments - 07/08/2009 1239 *Routing List:* Route List - Active *Instructions:* • Stickney, Randall G - Assign - Awaiting Response	
	• Knight, Mark A - Review - Awaiting Response - Due Date - 10/26/2009 0000 *Instructions:*	

ATTACHMENTS

Attachments	1. FW_ Request for due date extension for WRPS-PER-2009-0036.msg 2. Link to PER 3. WRPS-PER-2009-0036 E-Mail to PER Originator.msg

COMMENTS

Poster	Faust, Gary L - 07/08/2009 1239
	Decline
	Randy Stickney is the document owner of TFC-ENG-FACSUP-C-23, Equipment Identification and Data Management, which establishes the requirements for equipment numbering. This task should be assigned to him. Gary Faust.

Task# WRPS-PER-2009-0036.2

TASK DUE DATE HISTORY			
Modified	06/03/2009 1022 - ^PER CAs	**New Due Date**	10/28/2009 0000
Modified	06/03/2009 1022 - ^PER CAs	**New Due Date**	01/31/2010 0000

SUB TASK HISTORY

No Subtasks

-- end of report --

Task# WRPS-PER-2009-0036.3

E-STARS[R] Report
Task Detail Report
07/09/2009 0746

TASK INFORMATION			
Task#	WRPS-PER-2009-0036.3		
Subject	WRPS-PER-2009-0036; RES; Implement required changes to ensure that the K1 and K2 ventilation systems labeling and associated documentation (i.e. drawi		
Parent Task#	WRPS-PER-2009-0036	**Status**	Open
Reference	WRPS-PER-2009-0036	**Due**	01/27/2010
Originator	^PER CAs	**Priority**	Medium
Originator Phone		**Category**	PER
Origination Date	06/03/2009 1022	**Generic1**	None
Remote Task#		**Generic2**	None
Deliverable	PER Review	**Generic3**	None
Class	None	**View Permissions**	Global
Instructions	*No Instructions*		

ROUTING LISTS

1	Corrective Action	Active
	Implement required changes to ensure that the K1 and K2 ventilation systems labeling and associated documentation (i.e. drawings & procedures) agree. RESPONSIBLE MANAGER: When this corrective action is complete, enter a closure statement in E-STARS and close the E-STARS subtask. Refer to the Problem Evaluation Request procedure TFC-ESHQ-Q-C-C-01, Section 4.4 for closure documentation requirements	
	• Raven, Rebecca P - Assign - Awaiting Response - Due Date - 01/21/2010 0000 *Instructions:*	
	• Knight, Mark A - Review - Awaiting Response - Due Date - 01/25/2010 0000 *Instructions:*	

ATTACHMENTS

Attachments	1. FW_ Request for due date extension for WRPS-PER-2009-0036.msg 2. Link to PER 3. WRPS-PER-2009-0036 E-Mail to PER Originator.msg

COMMENTS

No Comments

TASK DUE DATE HISTORY

Modified	06/03/2009 1022 - ^PER CAs	**New Due Date**	01/27/2010 0000
Modified	06/03/2009 1022 - ^PER CAs	**New Due Date**	01/31/2010 0000

SUB TASK HISTORY

No Subtasks

-- end of report --

Save

Problem Evaluation Request (PER)

WRPS-PER-2009-0045
Closed 02/19/2009 13:45

PER No	Date of Discovery	Time of Discovery (24:00)	Project
WRPS-PER-2009-0045	01/08/2009	10:30	Base Ops

Location

OTHER

How Was Problem Discovered

Field Observation

Description of Concern or Problem

The WRPS Daily Report identified for months that the 616 Building has available Safety Showers. The Bay #5 and Office Area Safety Showers have not been in service for several months. Incorrect Safety information can lead to serious consequences.

Requirement Not Satisfied	Source Document Number

Equipment Identification Number	System Identification

Immediate actions Taken or Planned

Notified Shift Manager of the erroneous information about availability of Safety Showers within the 616 Bldg.

Recommended Corrective actions

Ensure Safety information read to our employees through the Daily Report is accurate/valid.

Originator Contact

I would like to review the the corrective actions at closure to ensure they were effective

Originators Name	Originators ID	Originators Phone	Date Initiated
Robbert, Michael G	H0034315	(509) 373-4179	01/08/2009

SHIFT OPERATIONS REVIEW

Title

Daily Report my have erroneous information about availability of Safety Showers within the 616 Bldg.

How Discovered	Agency
self-ID prior to event	

Reportability	SSC Operability	Operability Review	Comp Measures Req
Non-Reportable	N/A	N/A	

Describe actions Taken or Recommended

Waste Services provided BO SO new information on availability of Safety Showers which will be put in the next daily report. No other immediate actions required.

SO Reviewer Name	SO Reviewer ID	SO Reviewer Phone	SO Review Date
Wallgren, Carl B	H0099480	(509) 373-2689	01/08/2009

SCREENING

PER Significance Level	
PIE/CIM	

Independent Assessment Review	Occurrence Report Number	Externally Identified	
No		No	
Assigned Responsible Manager	**Facilities Rep / SSO**	**Safety Management Rep**	
Upchurch, Craig E			

Program	Safety Management Program

• N/A	• Industrial Safety

PER Screening Comments

PIE/CIM -- Even though the information in the Daily Report has been updated (see message from Craig Upchurch below), PER Screening Team recommended PIE/CIM for possible improvement in communicating changes in to Shift Office for Daily Report.
cc: Pete Owen
(Nancy Brown 01/12/09)

From: Upchurch, Craig E
Sent: Thursday, January 08, 2009 2:58 PM
To: ^Tank Farms Shift Operations
Cc: Robbert, Michael G (Mike); Nielsen, Judith A; Mendoza, Hiram A; Morales, Teodoro P (Ted); Randles, Jason J; Thomas, Anthony R (Tony)
Subject: 616 Building Safety Showers
After receiving approval from the safety and the emergency preparedness folks, I have taken the two safety showers out of service at 616 since they are not OSHA compliant. Additionally, the office safety shower presents an electrical hazard if used. A portable eyewash/safety shower has been placed next to the Bay #5 safety shower station and has been included in the portable eyewash/safety shower PM program. This is in response to PER-2009-0045.

Please revise the status of the 616 Building Safety Showers in the Daily Report to:

Bay #5 Portable Safety Shower is in Service

Office and Bay #5 Safety Showers are tagged Out of Service

Please call me if you have any questions.
Thanks,
Craig

Causal Code

MGT/Comm/Train	**Human Performance**	**GEMS**	**Equip/Eng/Other**
Failed Barrier	**ORPS Code**	**Functional Area**	**Work Process**
	Not Applicable	Waste Management	• Safety Shower and Eyewash Process
ISMS	**Consequence Code**		
Develop and implement hazard controls	• Communications - Inadequate communications, roles, responsibilities • Safety Concerns - Safety concerns, suggestions, and potential safety issues		
PER Screening Chair	**PER Screening Chair ID**	**PER Screening Chair Phone**	**PER Screening Date**
Brown, Nancy L	H0088797	(509) 373-0992	01/12/2009

PAAA REVIEW

PAAA Screening	**PAAA Codes**	**Function Codes**	
PAAA, Non-NTS Reportable	• 10 CFR 851.23 (a)(3)	• Personal Protective Equipment (PPE)	
NTS Report Number	**NTS Report Date**		
Repetitive / Recurrent	**Programmatic**	**Intentional Violation / Misrepresentation**	
No	No	No	

PAAA Screening Comments

29CFR1910.37(b)(1)

PAAA Reviewer Name	PAAA Review Date	
Anderson, Craig E	01/12/2009	
PAAA Approver Name	**PAAA Approve Date**	
Anderson, Craig E	01/13/2009	

SENIOR MANAGEMENT REVIEW/CONCURRENCE

TF Operations Morning Leadership Call

TF Operations Morning Leadership Call is no longer required.

Instructions for Responsible Manager

Evaluate suggestion, enter comments and required actions on PIE/CIM tab of the PER. Disposition in accordance with TFC-ESHQ-Q_C-C-01, Problem Evaluation Request.

Senior Management	Sr Mgmt ID	Sr Mgmt Phone	Sr Mgmt Review Date
Owen, Annette	H0054042	(509) 372-0533	01/13/2009

CAUSE ANALYSIS

Description of Occurrence

Extent of Condition

Safety Significance

Generic Implications

Remedial Corrective Action

Causal Analysis, Apparent Cause and/or Root Cause Analysis

PIE/CIM

Evaluation of PIE/CIM Initiative

The two safety showers were taken out of service as a corrective action to PER-CH2M-08-0867. This PER identified the two showers in building 616 as not OSHA compliant due to only supplying cold water. After receiving approval from the safety and the emergency preparedness folks, I had taken the two safety showers out of service. Additionally, the office safety shower presents an electrical hazard if used. A portable eyewash/safety shower was placed next to the Bay #5 safety shower station prior to being taken out of service. The portable eyewash/safety shower is in the PM program.

An email (attached) was sent to the shift office on Thursday, January 8, 2009 to update the Daily Report and again discussed with the Shift Manager on Monday, January 12, 2009. The email requested the Daily Report to be revised to state:

Bay #5 Portable Safety Shower is in Service

Office and Bay #5 Safety Showers are tagged Out of Service

ATTACHMENTS

Link to PER

Photos8508 032.jpg

Photos8508 032.jpg

Photos8508 036.jpg

AUDIT HISTORY

Change Date	Auditor	Comments
01/13/2009 08:20	Owen, Annette	Responsible Manager Task Launched by Owen, Annette
01/13/2009 16:08	Upchurch, Craig E	'Evaluation of PIE/CIM Initiative' was changed.

-- End of Report --

02/19/2009 01:45 PM

Task# WRPS-PER-2009-0045			
E-STARS[R] Report Task Detail Report 02/19/2009 0145			
TASK INFORMATION			
Task#	WRPS-PER-2009-0045		
Subject	PIE; Daily Report my have erroneous information about availability of Safety Showers within the 616 Bldg.		
Parent Task#		Status	CLOSED 02/19/2009
Reference		Due	03/09/2009
Originator	^PER Coordinator	Priority	Medium
Originator Phone		Category	PER
Origination Date	01/08/2009 1321	Generic1	None
Remote Task#		Generic2	None
Deliverable	PER Review	Generic3	None
Class	None	View Permissions	Global
Instructions	*No Instructions*		
ROUTING LISTS			
1	Responsible Manager		Inactive
	Evaluate suggestion, enter comments and required actions on PIE/CIM tab of the PER. Disposition in accordance with TFC-ESHQ-Q_C-C-01, Problem Evaluation Request.		
	• Upchurch, Craig E - Assign - Completed with comments - 01/13/2009 1554 *Instructions:*		
	• Upchurch, Craig E - Assign - Completed with comments - 01/13/2009 1557 *Instructions:* Did you contact the originator about the PER? Document your contact in the response window.		
	• Upchurch, Craig E - Assign - Completed with comments - 02/09/2009 1239 *Instructions:*		
	• Upchurch, Craig E - Assign - Completed with comments - 02/09/2009 1243 *Instructions:*		
2	Review Initial PER		Inactive
	Review New PER		
	• ^SO(Wallgren, Carl B) - Review - Concur - 01/08/2009 2224 *Instructions:*		
	• ^PER Screening(Brown, Nancy L) - Review - Concur - 01/12/2009 1357		

Task# WRPS-PER-2009-0045	
	Instructions:
	• ^Mgr Review(Owen, Annette) - Review - Concur - 01/13/2009 0820 *Instructions:*
ATTACHMENTS	
Attachments	1. Link to PER 2. Photos8508 032.jpg 3. Photos8508 032.jpg 4. Photos8508 036.jpg
COLLABORATION	
COMMENTS	
Poster	Upchurch, Craig E (Erickson, Janice l (Jan)) - 01/13/2009 0301
	From: Upchurch, Craig E Sent: Thursday, January 08, 2009 2:58 PM To: ^Tank Farms Shift Operations Cc: Robbert, Michael G (Mike); Nielsen, Judith A; Mendoza, Hiram A; Morales, Teodoro P (Ted); Randles, Jason J; Thomas, Anthony R (Tony) Subject: 616 Building Safety Showers After receiving approval from the safety and the emergency preparedness folks, I have taken the two safety showers out of service at 616 since they are not OSHA compliant. Additionally, the office safety shower presents an electrical hazard if used. A portable eyewash/safety shower has been placed next to the Bay #5 safety shower station and has been included in the portable eyewash/safety shower PM program. This is in response to PER-2009-0045. Please revise the status of the 616 Building Safety Showers in the Daily Report to: Bay #5 Portable Safety Shower is in Service Office and Bay #5 Safety Showers are tagged Out of Service Please call me if you have any questions. Thanks, Craig
Poster	Upchurch, Craig E (Erickson, Janice l (Jan)) - 01/13/2009 0301
	Completed
	From: Upchurch, Craig E Sent: Thursday, January 08, 2009 2:58 PM

Task# WRPS-PER-2009-0045	
	To: ^Tank Farms Shift Operations Cc: Robbert, Michael G (Mike); Nielsen, Judith A; Mendoza, Hiram A; Morales, Teodoro P (Ted); Randles, Jason J; Thomas, Anthony R (Tony) Subject: 616 Building Safety Showers After receiving approval from the safety and the emergency preparedness folks, I have taken the two safety showers out of service at 616 since they are not OSHA compliant. Additionally, the office safety shower presents an electrical hazard if used. A portable eyewash/safety shower has been placed next to the Bay #5 safety shower station and has been included in the portable eyewash/safety shower PM program. This is in response to PER-2009-0045. Please revise the status of the 616 Building Safety Showers in the Daily Report to: Bay #5 Portable Safety Shower is in Service Office and Bay #5 Safety Showers are tagged Out of Service Please call me if you have any questions. Thanks, Craig
Poster	Upchurch, Craig E (Erickson, Janice l (Jan)) - 01/13/2009 0301
	Completed
	_____ From: Upchurch, Craig E Sent: Thursday, January 08, 2009 2:58 PM To: ^Tank Farms Shift Operations Cc: Robbert, Michael G (Mike); Nielsen, Judith A; Mendoza, Hiram A; Morales, Teodoro P (Ted); Randles, Jason J; Thomas, Anthony R (Tony) Subject: 616 Building Safety Showers After receiving approval from the safety and the emergency preparedness folks, I have taken the two safety showers out of service at 616 since they are not OSHA compliant. Additionally, the office safety shower presents an electrical hazard if used. A portable eyewash/safety shower has been placed next to the Bay #5 safety shower station and has been included in the portable eyewash/safety shower PM program. This is in response to PER-2009-0045. Please revise the status of the 616 Building Safety Showers in the Daily Report to: Bay #5 Portable Safety Shower is in Service Office and Bay #5 Safety Showers are tagged Out of Service Please call me if you have any questions. Thanks, Craig
Poster	^PER Coordinator (Glaman, Linda R) - 01/13/2009 0401

Task# WRPS-PER-2009-0045			
	Return ESTARS task to Responsible Manager. 1-13-09 L Glaman		
	Responsible manager completed the task prior to finishing the evaluation and requested the task be returned to him for completion. L Glaman		
Poster	Upchurch, Craig E (Erickson, Janice l (Jan)) - 02/09/2009 1202		
	Completed		
	Discussed with orginator the corrective actions taken. No other actions are required.		
Poster	Upchurch, Craig E (Erickson, Janice l (Jan)) - 02/09/2009 1202		
	Completed		
	I contacted the orginator with corrective actions. No other actions necessary.		
Poster	^PER Coordinator (Glaman, Linda R) - 02/19/2009 0102		
	CLOSED		
	PER complete. L Glaman		
TASK DUE DATE HISTORY			
Modified	01/13/2009 0820 - ^PER Coordinator	New Due Date	03/09/2009 1630
Modified	01/13/2009 0820 - ^PER Coordinator	New Due Date	03/09/2009 1630
Modified	01/08/2009 1321 - ^PER Coordinator	New Due Date	01/10/2009 1630
SUB TASK HISTORY			
No Subtasks			
-- end of report --			

EMERGENCY SHOWER
AND
EYEWASH FOUNTAIN
NOTICE
When SPRAYED or
SPLASHED with
CORROSIVE LIQUIDS
WASH BODY QUICKLY
Especially the eyes
with large amounts of water!
OUT OF SERVICE
DO NOT USE
PUSH

EMERGENCY SHOWER
AND
EYEWASH FOUNTAIN
NOTICE
When SPRAYED or
SPLASHED with
CORROSIVE LIQUIDS
WASH BODY QUICKLY
Especially the eyes
with large amounts of water!
PUSH
OUT OF SERVICE
DO NOT USE

NOTICE
When SPRAYED or
SPLASHED with
CORROSIVE LIQUIDS
WASH BODY QUICKLY
Especially the eyes
with large amounts of water!
PUSH

Save

Problem Evaluation Request (PER)

WRPS-PER-2009-0049
In Process/Work

PER No	Date of Discovery	Time of Discovery (24:00)	Project
WRPS-PER-2009-0049	01/12/2009	09:00	RadCon Programs

Location

All Tank Farms

How Was Problem Discovered

Routine Work

Description of Concern or Problem

While preparing Radiological Controls Performance Indicator (PI) charts, an adverse trend was identified showing an increase in the number of PERs issued for contamination control. The number of contamination related PERs exceeded the 3-sigma upper control limits for two consecutive months (October 2008 and November 2008). Contamination control PERs have been tracking steadily with a mean of 4.42 PERs/month, standard deviation of 2.88 PERs/month, and an upper control limit of 13.06 PERs/month. There were 14 contamination control PERs in October 2008 and 19 in November 2008.

See also the following contamination related PERs from October and November 2008:
October (14 total): CH2M-PER-2008-1934, WRPS-PER-2008-0073, WRPS-PER-2008-0078, WRPS-PER-2008-0099, WRPS-PER-2008-0107, WRPS-PER-2008-0115, WRPS-PER-2008-0116, WRPS-PER-2008-0129, WRPS-PER-2008-0133, WRPS-PER-2008-0136, WRPS-PER-2008-0149, WRPS-PER-0154, WRPS-PER-2008-0155, and WRPS-PER-2008-0156

November (19 total): WRPS-PER-2008-0163, WRPS-PER-2008-0164, WRPS-PER-2008-0169, WRPS-PER-2008-0175, WRPS-PER-2008-0176, WRPS-PER-2008-0178, WRPS-PER-2008-0180, WRPS-PER-2008-0181, WRPS-PER-2008-0182, WRPS-PER-2008-0183, WRPS-PER-2008-0184, WRPS-PER-2008-0187, WRPS-PER-2008-0202, WRPS-PER-2008-0223, WRPS-PER-2008-0232, WRPS-PER-2008-0245, WRPS-PER-2008-0257, WRPS-PER-2008-0258, WRPS-PER-2008-0276

Requirement Not Satisfied	Source Document Number

Equipment Identification Number	System Identification
N/A	

Immediate actions Taken or Planned

Notified Radiological Control manager. Documented the adverse trend in this PER.

Recommended Corrective actions

Causal analysis is necessary to determine why there is an adverse trend in contamination related PERs. Please assign this PER to Jim Rolph as a PER with Resolution.

Originator Contact

No

Originators Name	Originators ID	Originators Phone	Date Initiated
Hanni, Jon	H2391068	(509) 373-4017	01/12/2009

SHIFT OPERATIONS REVIEW

Title

Adverse trend was identified showing an increase in the number of PERs issued for contamination control.

How Discovered	Agency
self-ID prior to event	

Reportability	SSC Operability	Operability Review	Comp Measures Req
Non-Reportable	N/A	N/A	

Describe actions Taken or Recommended

No additional actions taken or recommended by Base Ops SO

SO Reviewer Name	SO Reviewer ID	SO Reviewer Phone	SO Review Date
Strasser, David W	H0075556	(509) 373-2689	01/12/2009

SCREENING

PER Significance Level	
PER with Resolution	

Independent Assessment Review	Occurrence Report Number	Externally Identified	
No		No	
Assigned Responsible Manager	**Facilities Rep / SSO**	**Safety Management Rep**	
Rolph, Jim T			
Program		**Safety Management Program**	
• N/A		• Radiological Control	

PER Screening Comments

PER w/ Res with formal Apparent Cause Analysis
cc: Eric Bickel, Tino Maciuca
(Nancy Brown 01/13/09)

Causal Code

MGT/Comm/Train	**Human Performance**	**GEMS**	**Equip/Eng/Other**
Failed Barrier	**ORPS Code**	**Functional Area**	**Work Process**
	Not Applicable	Radiation Protection	• Corrective Action Management
ISMS	**Consequence Code**		
Provide feedback and continuous improvement	• Radiological Program Requirement - Problems identifed related to the requriments of the Radiological Program.		
PER Screening Chair	**PER Screening Chair ID**	**PER Screening Chair Phone**	**PER Screening Date**
Brown, Nancy L	H0088797	(509) 373-0992	01/13/2009

PAAA REVIEW

PAAA Screening	PAAA Codes	Function Codes	
PAAA, Non-NTS Reportable	• 10 CFR 835.1102 (a)	• RadCon Inadequate Contamination Control	
NTS Report Number	**NTS Report Date**		
Repetitive / Recurrent	**Programmatic**	**Intentional Violation / Misrepresentation**	
No	No	No	

PAAA Screening Comments

PAAA Reviewer Name	PAAA Review Date	
Anderson, Craig E	01/13/2009	
PAAA Approver Name	**PAAA Approve Date**	
Anderson, Craig E	01/14/2009	

SENIOR MANAGEMENT REVIEW/CONCURRENCE

TF Operations Morning Leadership Call

TF Operations Morning Leadership Call is no longer required.

Instructions for Responsible Manager

Review the PER Screening Tab and Senior Manager Review for requested data. Complete the task in E-STARS in accordance with TFC-ESHQ-Q_C-C-01, and TFC-ESHQ-Q_ADM-C-12 Apparent Cause Analysis & Corrective Action Planning.

Senior Management	Sr Mgmt ID	Sr Mgmt Phone	Sr Mgmt Review Date
Owen, Annette	H0054042	(509) 372-0533	01/14/2009

CAUSE ANALYSIS

Description of Occurrence

Extent of Condition
Safety Significance
Generic Implications
Remedial Corrective Action
Causal Analysis, Apparent Cause and/or Root Cause Analysis
ATTACHMENTS
E-stars action extension request.2009-0049htm.msg
Link to PER
RE_ Pls extend PER-2009-0049 out to 8_15_09.msg

AUDIT HISTORY

Change Date	Auditor	Comments
01/14/2009 09:09	Owen, Annette	Responsible Manager Task Launched by Owen, Annette

-- End of Report --
07/09/2009 07:48 AM

Task# WRPS-PER-2009-0049

E-STARS[R] Report
Task Detail Report
07/09/2009 0748

TASK INFORMATION			
Task#	WRPS-PER-2009-0049		
Subject	RES; Adverse trend was identified showing an increase in the number of PERs issued for contamination control.		
Parent Task#		**Status**	Open
Reference		**Due**	08/15/2009
Originator	^PER Coordinator	**Priority**	Medium
Originator Phone		**Category**	PER
Origination Date	01/12/2009 1033	**Generic1**	None
Remote Task#		**Generic2**	None
Deliverable	PER Review	**Generic3**	None
Class	None	**View Permissions**	Global
Instructions	*No Instructions*		

ROUTING LISTS

1	Responsible Manager	Active
	Review the PER Screening Tab and Senior Manager Review for requested data. Complete the task in E-STARS in accordance with TFC-ESHQ-Q_C-C-01, and TFC-ESHQ-Q_ADM-C-12 Apparent Cause Analysis & Corrective Action Planning.	
	• Rolph, Jim T - Assign - Delegated - 01/14/2009 1633 *Instructions:* ↳ *Routing List:* Route List - Active *Instructions:* • Livesey, Lee M - Assign - Awaiting Response	
2	Review Initial PER	Inactive
	Review New PER	
	• ^SO(Strasser, David W) - Review - Concur - 01/12/2009 1133 *Instructions:*	
	• ^PER Screening(Brown, Nancy L) - Review - Concur - 01/13/2009 1319 *Instructions:*	
	• ^Mgr Review(Owen, Annette) - Review - Concur - 01/14/2009 0909 *Instructions:*	

ATTACHMENTS

Attachments	1. E-stars action extension request.2009-0049htm.msg 2. Link to PER 3. RE_ Pls extend PER-2009-0049 out to 8_15_09.msg

COMMENTS

Poster	Livesey, Lee M - 01/21/2009 0832
	The conduct of the causal analysis and determination of corrective actions should be subtasked to the facility owners. While the conditions identified and documented in the PER system primarily reflect the conditions discovered during routine radiological surviellances,

Task# WRPS-PER-2009-0049

	they doe not represent conditions under the control of the radiological projects or program office. The analysis and resolution is the responsibility of facilty management. LML 01/21/09
Poster	^PER Coordinator (Glaman, Linda R) - 06/02/2009 0902
	1st Extension to 8-15-09 per attached email. LBG 6-2-09
	Please extend the above reference PER out to 8/15/09 so subtasks can be assigned. Jim Rolph 5-28-09 I spoke with Jim. The MSC contract transition and the subsequent introduction of new players in the process is a significant portion of the issue. Please process the extensiion. B Brown for T Maciuca 6-1-09.

TASK DUE DATE HISTORY

Modified	06/02/2009 0858 - ^PER Coordinator (Glaman, Linda R)	**New Due Date**	08/15/2009 1630
Modified	01/14/2009 0909 - ^PER Coordinator	**New Due Date**	02/26/2009 1630
Modified	01/14/2009 0909 - ^PER Coordinator	**New Due Date**	02/26/2009 1630
Modified	01/12/2009 1033 - ^PER Coordinator	**New Due Date**	01/14/2009 1630

SUB TASK HISTORY

No Subtasks

-- end of report --

Message

From: Livesey, Lee M

Sent: Thursday, May 07, 2009 1:44 PM

To: ^WRPS Corrective Action Group

Cc: Rolph, James T; Livesey, Lee M

Subject: E-stars action extension request

An extension to e-stars action WRPS-PER-2009-0049 is requested until July 30, 2009 to perform the causal analysis necessary to determine why there is an adverse trend in contamination related PERs.

Delays have occurred due to staff demands and competing priorities, specifically Verification of ISMS Implementation Phase II activities.

Lee

Message

From: Brown, Robert L
Sent: Monday, June 01, 2009 7:56 AM
To: ^WRPS Corrective Action Group; Glaman, Linda; Owen, Annette
Cc: Rolph, James T; Livesey, Lee M; Maciuca, Constantin
Subject: RE: Pls extend PER-2009-0049 out to 8/15/09

I spoke with Jim. The MSC contract transition and the subsequent introduction of new players in the process is a significant portion of the issue. Please process the extensiion.

From: ^WRPS Corrective Action Group
Sent: Thursday, May 28, 2009 3:17 PM
To: Brown, Robert L
Cc: Rolph, James T; Livesey, Lee M; Maciuca, Constantin
Subject: FW: Pls extend PER-2009-0049 out to 8/15/09
Importance: High

This is the first extension request...there is no causal analysis information in the PER, the resolution has been delegated. The resolution was due 2-26-09, making it 91 days delinquent. The extension would make the PER 170 days old at resolution completion.

Thanks...As always, please call if you have questions

Linda RB Glaman
Operations Support Specialist/CAM
376-1776/376-6249
2750E/A-208/R2-87

"The only stupid question is the one that remains unasked"

From: Rolph, James T
Sent: Thursday, May 28, 2009 2:51 PM
To: ^WRPS Corrective Action Group
Subject: Pls extend PER-2009-0049 out to 8/15/09

TBD00000	WRPS-PER-2009-0049	RES; Adverse trend was identified showing an increase in the number of PERs issued for contamination control.	Livesey, Lee M	02-26-2009

Please extend the above reference PER out to 8/15/09 so subtasks can be assigned.

Jim Rolph
WRPS
MSIN: R1-05
376-7686
372-3522 fax
619-3588 cell

Save

Problem Evaluation Request (PER)

WRPS-PER-2009-0050
Closed 04/23/2009 11:15

PER No	Date of Discovery	Time of Discovery (24:00)	Project
WRPS-PER-2009-0050	01/12/2008	11:15	Q A

Location

All Tank Farms

How Was Problem Discovered

Routine Work

Description of Concern or Problem

The upgrade to PER 3.0 on October 1, 2008 has caused problems with PER trending codes and data retrieval from the PER system. Specifically, the Work Process and Consequence Code fields were changed as part of the update so that more than one code can be selected for each field; previously, each PER could only be coded with one Work Process and one Consequence Code. The ability to select multiple codes for these fields can be beneficial for more accurate trending analysis. The downside has been retrieving PER data for PERs initiated after the upgrade. When one clicks on the "Reports" tab and then clicks "Create New Report," there are several different fields that can be selected for querying the PER database. Both the Work Process and Consequence Code fields can be used for queries, however only PERs initiated prior to October 1, 2008 will appear in the report if these fields are used for the search parameters. Also, any new consequence codes that were added after October 1 will return empty reports when they are used for querying.

This issue is important because the Work Process and Consequence Codes are used for trending analysis. For instance, the RadCon program uses these codes to populate performance indicator charts that are presented monthly to ORP. An ad-hoc database has been used in the past to retrieve the PER data based upon Work Process and Consequence Code and to automatically populate the RadCon performance indicator charts. The inability to query on these fields has resulted in a significant increase in staff-time spent preparing the charts. Total staff-time spent on updating performance indicators each month has increased approximately 4-fold since the debut of PER 3.0.

Requirement Not Satisfied	Source Document Number

Equipment Identification Number	System Identification
N/A	

Immediate actions Taken or Planned

Discussed with Corrective Actions group member and wrote PER.

Recommended Corrective actions

Work with LMIT to resolve this issue.

Originator Contact

I would like to review the the corrective actions at closure to ensure they were effective

Originators Name	Originators ID	Originators Phone	Date Initiated
Hanni, Jon	H2391068	(509) 373-4017	01/12/2009

SHIFT OPERATIONS REVIEW

Title

Problems with PER trending codes and data retrieval

How Discovered	Agency
self-ID prior to event	

Reportability	SSC Operability	Operability Review	Comp Measures Req
Non-Reportable	N/A	N/A	

Describe actions Taken or Recommended

No additional Base Ops Shift Office actions required.

SO Reviewer Name	SO Reviewer ID	SO Reviewer Phone	SO Review Date
Johnson, Brian A	H0003531	(509) 373-2696	01/12/2009

SCREENING

PER Significance Level	
PIE/CIM	

Independent Assessment Review	Occurrence Report Number	Externally Identified	
No		No	
Assigned Responsible Manager	**Facilities Rep / SSO**	**Safety Management Rep**	
Maciuca, Tino			
Program		**Safety Management Program**	
• N/A		• Performance Assessment • Quality Assurance	
PER Screening Comments			
No comments (Nancy Brown 01/13/09)			
Causal Code			
MGT/Comm/Train	**Human Performance**	**GEMS**	**Equip/Eng/Other**
Failed Barrier	**ORPS Code**	**Functional Area**	**Work Process**
	Not Applicable	Quality Assurance	• Corrective Action Management
ISMS	**Consequence Code**		
Perform work within the controls	• Computer Software - Inadequacies and issues with network, desktop, database, and other computer software applications		
PER Screening Chair	**PER Screening Chair ID**	**PER Screening Chair Phone**	**PER Screening Date**
Brown, Nancy L	H0088797	(509) 373-0992	01/13/2009
PAAA REVIEW			
PAAA Screening	**PAAA Codes**	**Function Codes**	
PAAA, Non-NTS Reportable	• 10 CFR 830.122 (c)(1) • 10 CFR 830.122 (c)(3)	• Corrective Action Program • Performance Assessment (including walk downs) • Procedure Quality	
NTS Report Number	**NTS Report Date**		
Repetitive / Recurrent	**Programmatic**	**Intentional Violation / Misrepresentation**	
No	No	No	
PAAA Screening Comments			
PAAA Reviewer Name	**PAAA Review Date**		
Anderson, Craig E	01/13/2009		
PAAA Approver Name	**PAAA Approve Date**		
Anderson, Craig E	01/14/2009		
SENIOR MANAGEMENT REVIEW/CONCURRENCE			
TF Operations Morning Leadership Call			
TF Operations Morning Leadership Call is no longer required.			
Instructions for Responsible Manager			
Evaluate suggestion, enter comments and required actions on PIE/CIM tab of the PER. Disposition in accordance with TFC-ESHQ-Q_C-C-01, Problem Evaluation Request.			
Senior Management	**Sr Mgmt ID**	**Sr Mgmt Phone**	**Sr Mgmt Review Date**
Owen, Annette	H0054042	(509) 372-0533	01/14/2009

CAUSE ANALYSIS
Description of Occurrence
Extent of Condition
Safety Significance
Generic Implications
Remedial Corrective Action
Causal Analysis, Apparent Cause and/or Root Cause Analysis

PIE/CIM
Evaluation of PIE/CIM Initiative
LMIT was notified of the problem and ran a series of test on the Report function in the PER program. The results of the tests identified several errors in the function; see attachment "Create a Report - Tested various code filters.msg". In response a meeting was held at LMIT between the CAM group and the programers where several new issues were identified to be added to the ROM, see attachment "Recap of today's meeting.msg". The ROM request has been finalized including addressing the identified Report function issues and is with LMIT for quote determination; see attachment "UPDATE_PER issues - Categorized_ ready to estimate.msg".

ATTACHMENTS
Create a Report - Tested various code filters.msg
Extension request for WRPS-PER-2009-0050.msg
IDMS Archive Link
Link to PER
RE_ Informal Rough Estimate for Problem Evaluation Request _PER_ Upgrade and Fixes.msg
Recap of today_s meeting.msg
UPDATE_ PER issues - Categorized_ ready to estimate.msg

AUDIT HISTORY

Change Date	Auditor	Comments
01/14/2009 09:10	Owen, Annette	Responsible Manager Task Launched by Owen, Annette

-- End of Report --
07/09/2009 07:51 AM

Task# WRPS-PER-2009-0050

E-STARS[R] Report
Task Detail Report
07/09/2009 0751

TASK INFORMATION			
Task#	WRPS-PER-2009-0050		
Subject	PIE; Problems with PER trending codes and data retrieval		
Parent Task#		**Status**	CLOSED 04/23/2009
Reference		**Due**	04/10/2009
Originator	^PER Coordinator	**Priority**	Medium
Originator Phone		**Category**	PER
Origination Date	01/12/2009 1157	**Generic1**	None
Remote Task#		**Generic2**	None
Deliverable	PER Review	**Generic3**	None
Class	None	**View Permissions**	Global
Instructions	*No Instructions*		

ROUTING LISTS

1	Responsible Manager	Inactive
	Evaluate suggestion, enter comments and required actions on PIE/CIM tab of the PER. Disposition in accordance with TFC-ESHQ-Q_C-C-01, Problem Evaluation Request.	
	• Maciuca, Tino - Assign - Completed - 04/06/2009 1503 *Instructions:* ↳ *Routing List:* Route List - Inactive *Instructions:* • Glaman, Linda R - Assign - Completed with comments - 04/06/2009 1459	
	• Maciuca, Tino - Assign - Completed - 04/06/2009 1503 *Instructions:* Did you contact the originator about the PER? Document your contact in the response window.	
2	Review Initial PER	Inactive
	Review New PER	
	• ^SO(Johnson, Brian A) - Review - Concur - 01/12/2009 1928 *Instructions:*	
	• ^PER Screening(Brown, Nancy L) - Review - Concur - 01/13/2009 1351 *Instructions:*	
	• ^Mgr Review(Owen, Annette) - Review - Concur - 01/14/2009 0910 *Instructions:*	

ATTACHMENTS

Attachments	1. Create a Report - Tested various code filters.msg 2. Extension request for WRPS-PER-2009-0050.msg 3. IDMS Archive Link 4. Link to PER 5. RE_ Informal Rough Estimate for Problem Evaluation Request _PER_ Upgrade and Fixes.msg 6. Recap of today_s meeting.msg 7. UPDATE_ PER issues - Categorized_ ready to estimate.msg

COMMENTS

Task# WRPS-PER-2009-0050

Poster	^PER Coordinator (Owen, Annette) - 03/13/2009 1257
	Extend to 4/10/09 per attached e-mail request.
	Please extend the subject PER to April 10, 2009. Meeting is scheduled with LMIT next week to discuss the issue.
Poster	Glaman, Linda R - 04/06/2009 1459
	Completed
	The problem was discussed w/LMIT. There are several issues with the Report Function in PER. The repair of this issues has been added to the ROM request and will be completed with the next PER program upgrade release. Until the function is repaired, the data can be obtained by going to the CAM group's data analyst, Tami Harris. Suggest a corrective action be launched to document the repair of the report function upon completion of the program upgrade release. Linda Glaman
Poster	^PER Coordinator (Glaman, Linda R) - 04/23/2009 1111
	CLOSED
	ROM quote approved on 4-16-09. Repair of the report function is addressed in the workscope. L Glaman

TASK DUE DATE HISTORY

Modified	03/13/2009 1257 - ^PER Coordinator (Owen, Annette)	**New Due Date**	04/10/2009 1630
Modified	01/14/2009 0910 - ^PER Coordinator	**New Due Date**	03/13/2009 1630
Modified	01/14/2009 0910 - ^PER Coordinator	**New Due Date**	03/13/2009 1630
Modified	01/12/2009 1157 - ^PER Coordinator	**New Due Date**	01/14/2009 1630

SUB TASK HISTORY

No Subtasks

-- end of report --

Message

From: Maciuca, Constantin

Sent: Friday, March 13, 2009 11:53 AM

To: ^WRPS Corrective Action Group

Subject: Extension request for WRPS-PER-2009-0050

Please extend the subject PER to April 10, 2009. Meeting is scheduled with LMIT next week to discuss the issue.

Thank you,

Tino Maciuca

Message

From: Sheriff, Marnelle L

Sent: Thursday, April 16, 2009 12:15 PM

To: Maciuca, Constantin

Cc: Vacca, Joseph; Lesko, Andrew C; Glaman, Linda; Owen, Annette; Arbogast, Heather M; Lugo, Elizabeth C; Thomas, Debbie (WRPS)

Subject: RE: Informal Rough Estimate for Problem Evaluation Request (PER) Upgrade and Fixes

Change made as requested.

Issue 3952; Remove Senior Management Review functionality

WRPS process change to PER. WRPS will no longer perform Senior Management Review (as previously designed) but would like to alter the existing process/report tools as follows:

1) On Submit of the Screening tab – Do not generate the Senior Management Review tab (no more tab, functionality, instructions, etc)
2) On submit of the Screening tab – activate the Launch to Responsible Manager (RM) button
    a. Go into the ^screening box to concur on each, moving them into the ^senior manager review box
3) Rename all Senior Management Review reports to read Manager Review Report. This includes any titles generated on the reports themselves.
    a. ~~Senior~~ Management Summary Report
    b. ~~Senior~~ Management Batch Report
    c. ~~Senior Management/SAC Meeting Report~~ PER Assignment Summary Report

Marnelle L. Sheriff
Project Manager
Lockheed Martin
Richland, WA
509-376-5011 office
509-205-7520 cell

please consider the environment before printing this e-mail

From: Maciuca, Constantin
Sent: Thursday, April 16, 2009 9:39 AM
To: Sheriff, Marnelle L; Thomas, Debbie (WRPS)
Cc: Vacca, Joseph; Lesko, Andrew C; Glaman, Linda; Owen, Annette; Arbogast, Heather M; Lugo, Elizabeth C
Subject: RE: Informal Rough Estimate for Problem Evaluation Request (PER) Upgrade and Fixes

Marnelle,

Please make the following change: in Section 2.1 #3: Remove references to the SAC meeting as that meeting has been canceled.

With the change indicated above incorporated, please consider approved the scope defined in sections 2.0 and 4.0.

Regards,

Tino Maciuca, Manager
Performance Assurance & CAM

From: Sheriff, Marnelle L
Sent: Wednesday, April 15, 2009 9:56 AM
To: Maciuca, Constantin; Thomas, Debbie (WRPS)
Cc: Vacca, Joseph; Lesko, Andrew C; Glaman, Linda; Owen, Annette; Arbogast, Heather M; Lugo, Elizabeth C; Sheriff, Marnelle L
Subject: Informal Rough Estimate for Problem Evaluation Request (PER) Upgrade and Fixes

Tino – Please review the attached ROM and approve the scope defined in section 2.0, PER Enhancements and section 4.0, PER Training. LM proposes a Time and Material (T&M) ROM of $24,250 to provide the enhancements as described in Section 2.0 and training support services described in Section 4.0.

Debbie – Please review the attached ROM and approve the scope defined in section 3.0, PER Fixes. LM proposes a Time and Material (T&M) ROM of $12,904 to provide the fixes as described in Section 3.0.

Assumptions/constraints:

- This is a ROM estimate. This estimate is subject to change during further requirements analysis.
- This ROM is based on all of the above mentioned items and must be completed in the same release.
- Material cost to print training material will be financed by and arranged through WRPS use of site printing services

Provide approval or comment back to me via email as soon as practical.

Thank you.

Marnelle L. Sheriff
Project Manager
Lockheed Martin
Richland, WA
509-376-5011 office
509-205-7520 cell

please consider the environment before printing this e-mail

Message

From: Sheriff, Marnelle L
Sent: Monday, March 16, 2009 4:32 PM
To: Vacca, Joseph; Maciuca, Constantin
Cc: Owen, Annette; Glaman, Linda; Seitz, Jeffrey P; Dierking, Jeffrey W; Arbogast, Heather M
Subject: Recap of today's meeting

From PER O&M –

Issue: Search results sent to print (or print preview) are rendered onto 2 pages, regardless of the number of actual returns which causes multiple records to be displayed on top of each other (creates a heavy black line of print)

Issue: The SAC report is rendering 2 headers and 2 footers; appears to be a template within a template

Issue: On PER Create a Report, the PAAA Screening, Work Process, Consequence Code and Cause Code filters are not working properly. Erroneous/incomplete data.

From PER Upgrade –

Enhancement: Since the creation of the new Program code and associated safety counsel data selections, the old safety council data selections are not viewable under the Project code (they are inactive) and cannot be easily cross walked and reported on. Suggest creating a new report that will perform the crosswalk and can be written to Excel. That way any user can render the report and manipulate the data as needed.

Enhancement: Discussed the changes to the Senior Management Review process already sent out via ROM. Decided to re-route the email to allow the CAG to identify all software changes necessary to support their recently revised administrative procedure.

Once the enhancement information is received for the two items listed above, LM will re-issue the ROM for approval.

Thanks for a successful scoping meeting.

Marnelle L. Sheriff
Project Manager
Lockheed Martin Enterprise Solutions and Services (LMES&S)
509-376-5011 office
509-205-7520 cell

please consider the environment before printing this e-mail

Message

From: Sheriff, Marnelle L
Sent: Tuesday, March 31, 2009 2:40 PM
To: Sheriff, Marnelle L; Glaman, Linda; Owen, Annette
Cc: Maciuca, Constantin; Vacca, Joseph; Dierking, Jeffrey W; Arbogast, Heather M; Seitz, Jeffrey P
Subject: UPDATE: PER issues - Categorized; ready to estimate

I added Issue 4003.

I changed the title of issue 3884 to more closely describe the condition.

Sent: Monday, March 30, 2009 4:35 PM
To: Glaman, Linda; Owen, Annette
Cc: Maciuca, Constantin; Vacca, Joseph; Dierking, Jeffrey W; Arbogast, Heather M
Subject: PER issues - Categorized; ready to estimate

Here is the all inclusive list. I will estimate the items listed under Enhancements and Training against the PER Upgrade account. Items under Problem will be estimated against the PER O&M account.

Those items marked 3.02 are clearly slated for the PER 3.02 release whereas the others will have to be estimated and approved to be worked.

Please review your notes to ensure I captured everything we talked about.

Problem – HOTFIX PER 3.01.01

3977	3.XX - PER	PER Type Code changes on CA Due Date Extension	PERS - Add/Edit Corrective Actions

Problem – PER 3.02

3979	3.02	Adhoc report tool does not filter on cause codes	PERS - Reports
3951	3.XX - PER	Crash in PER Reports	PERS - Reports
3894	3.XX - PER	PER Screening Batch Report is not consistently page break whe the report is printed	PERS - Reports
3885	3.XX - PER	Sorting Colums in reports	PERS - Reports
3884	3.02	Several data filters broke on Adhoc Report	PERS - Reports
3999	3.02	Search results sent to print - heavy black line for returns > 2 pages	PERS - Search
4000	3.02	SAC report - 2 headers and 2 footers	PERS - Reports
4003	3.XX -	Cause tab can be submitted without Cause Code selection	PERS - Cause Analysis

	PER		Tab

Enhancements – PER 3.02

3978	3.XX - PER	Include original tab submission in PER Audit History	PERS - General Functionality
3952	3.02	Remove Senior Management Review	PERS - Sr Mgr Review Tab
3916	3.XX - PER	Download reports to Microsoft Excel	PERS - Reports
3994	3.02	Insert IA review role in all PER w RES type PERs	PERS - PER Screening Tab
3995	3.02	Grey out trend codes on TUF and CAUSE tabs	PERS - PER Screening Tab
3996	3.02	Remove additional RM review role implemented in previous release	PERS - Originator Tab
3997	3.02	Close role back to PER COOR for TUF PERs	PERS - TUF Tab
3998	3.02	HPI - kill check box and require entry for tab submit	PERS - Cause Analysis Tab
4001	3.XX - PER	New report that joins the old APC with new APC trend codes	PERS - Reports

Training

4002	3.XX - PER	Update PER Training Material through PER 3.02	PERS - Admin General

Marnelle L. Sheriff
Project Manager
Lockheed Martin Enterprise Solutions and Services (LMES&S)
509-376-5011 office
509-205-7520 cell

please consider the environment before printing this e-mail

Message

From: Sheriff, Marnelle L
Sent: Monday, March 16, 2009 1:36 PM
To: Harris, Tammy C; Glaman, Linda; Owen, Annette
Cc: Sheriff, Marnelle L; Maciuca, Constantin; Vacca, Joseph; Dierking, Jeffrey W; Seitz, Jeffrey P
Subject: Create a Report - Tested various code filters
Attachments: Test PER 2009_0096.pdf

All. Please refer to the attached test PER 2009-0096. The circles identify area's tested and passed (check mark) or failed (X).

Summary of Failures:

Ind. Assessment Review should go under Screening Filters

SO FILTERS			
How Discovered	All	SSC Operability	All
Reportability	All	Operability Review	All
Ind. Assessment Review	All		
SCREENING FILTERS			

Search on PAAA Screening did not return test case 2009-0096

SCREENING FILTERS			
Regulatory Related	All	Externally Identified	All
Signifigance Level	All	ORPS Code	All
PAAA Screening	Potential PAAA Reportal	Functional Area	All

Search on Work Process did not return test case 2009-0096. Ran two different values through with same result.

SCREENING FILTERS			
Regulatory Related	All	Externally Identified	All
Signifigance Level	All	ORPS Code	All
PAAA Screening	All	Functional Area	All
MGT/Comm/Train	All	Work Process	Access Control - Bad

Search on Consequence Code did not return test case 2009-0096. Ran two different values with the same results.

Program	
Consequence Code	Injury/Other - Minor injuries or illnesses, first aid items - not captured in other cons

Search on Cause Code string returned same number of results (>29K) with or without the cause code string typed in.

Causal Code A	A1 - Design/Engineering Problem
Causal Code B	B1 - Design Input LTA
Causal Code C	C01 - Design input cannot be met

Marnelle L. Sheriff
Project Manager
Lockheed Martin Enterprise Solutions and Services (LMES&S)
509-376-5011 office
509-205-7520 cell

please consider the environment before printing this e-mail

Save

Problem Evaluation Request (PER)

WRPS-PER-2009-0385
In Process/Work

PER No	Date of Discovery	Time of Discovery (24:00)	Project
WRPS-PER-2009-0385	03/11/2009	14:32	Base Ops

Location

OTHER

How Was Problem Discovered

DOE-ORP

Description of Concern or Problem

This PER was generated to document the results of a surveillance conducted by the U. S. Department of Energy, Office of River Protection (ORP) from October 1 through December 31, 2008. The purpose of the surveillance was to evaluate WRPS Response to Abnormal Events. The surveillance team found emergency response and Conduct of Operations deficiencies in which the Base Operations and 222-S Laboratory management team did not implement approved Abnormal Response Procedures and processes following indications of abnormal operating conditions. The surveillance yielded the following Concern and Findings:

Concern S-09-ESQ-TANKFARMv-003-CO1 - Weakness in Emergency Response Program implementation is indicated based on several instances in which WRPS Base Operations and 222-S Laboratory management team did not implement approved abnormal response procedures following indications of abnormal operating conditions;

Finding S-09-ESQ-TANKFARM-003-Fo1 - Alarm Response procedures for Tank High Pressure alarms were not utilized for AW Tank Farm high pressure alarms as required;

Finding S-09-ESQ-TANKFARM-003-F02 - Abnormal Operating Procedure immediate actions were not taken for elevated airborne radioactivity levels identified during decontamination activities at the 204-AR decontamination facility;

Finding S-09-ESQ-TANKFARM-003-F03 - Immediate and follow-up actions contained in ER-P-222S-009, "Spill/Release/Continuous Air Monitor Alarm," were not initiated or completed for a spill of radioactive material at 222-S laboratories;

Finding S-09-ESQ-TANKFARM-003-F04 - General Radiological Work Permits are inappropriately utilized for emergency response activities;

Finding S-09-ESQ-TANKFARM-003-F05 - Conduct of Operations, Radiological Control and 1H controls implemented during initial event response, and subsequent planned response actions for the 702-AZ spill were not adequate to prevent additional personnel exposures to tank vapors and tank ventilation condensate; and

Finding S-09-ESQ-TANKFARM-003-F06 - IHI Technicians have not been trained on response actions for tank over-pressure alarms.

Requirement Not Satisfied	Source Document Number

Equipment Identification Number	System Identification

Immediate actions Taken or Planned

Initiated PER

Recommended Corrective actions

Perform a Root Cause Analysis and transmit results to ORP

Originator Contact

e-mail

Originators Name	Originators ID	Originators Phone	Date Initiated
Mata, Beth L	H0056284	(509) 373-0422	03/11/2009

SHIFT OPERATIONS REVIEW

Title			
Results of DOE surveillance of WRPS Response to Abnormal Events			
How Discovered		**Agency**	
Externally Identified		DOE - Office of River Protection	
Reportability	**SSC Operability**	**Operability Review**	**Comp Measures Req**
Non-Reportable	N/A	N/A	
Describe actions Taken or Recommended			
No additional actions taken or recommended.			
SO Reviewer Name	**SO Reviewer ID**	**SO Reviewer Phone**	**SO Review Date**
Higham, Dale B	H0078950	(509) 373-2689	03/11/2009
SCREENING			
PER Significance Level			
Significant			
Independent Assessment Review	**Occurrence Report Number**	**Externally Identified**	
No		Yes	
Assigned Responsible Manager	**Facilities Rep / SSO**	**Safety Management Rep**	
Gregory, Rob		Owen, Peter	
Program		**Safety Management Program**	
• N/A		• Conduct of Operations	
PER Screening Comments			
Perform Root Cause Analysis See attached ORP Surveillance Report See also WRPS-PER-2009-0386 cc: Duane Renberger, Sandy Hyman, Pete Owen, Brad Brannan, Jim Rolph, Kim Roueche, Tracy Steelman (Nancy Brown 03/12/09)			
Causal Code			
A3B1C07	Human Performance LTA Skill Based Error Omission/repeating of steps due to assumptions for completion		
A3B1C07	Human Performance LTA Skill Based Error Omission/repeating of steps due to assumptions for completion		
A3B2C04	Human Performance LTA Rule Based Error Previous success in use of rule reinforced continued use of rule		
A3B3C05	Human Performance LTA Knowledge Based Error Incorrect assumption that a correlation existed between two or more facts		
A3B3C06	Human Performance LTA Knowledge Based Error Individual underestimated the problem by using past events as basis		
A4B1C01	Management Problem Management Methods LTA Management policy guidance/expectations not well-defined, understood or enforced		
A4B1C04	Management Problem Management Methods LTA Management follow-up or monitoring of activities did not identify problems		
A4B1C04	Management Problem Management Methods LTA Management follow-up or monitoring of activities did not identify problems		
A5B2C05	Communications LTA Written Communications Content LTA Ambiguous instructions/requirements		

A5B2C07	Communications LTA Written Communications Content LTA Facts wrong/requirement not correct		
A5B2C08	Communications LTA Written Communications Content LTA Incomplete/situation not covered		
MGT/Comm/Train	**Human Performance**	**GEMS**	**Equip/Eng/Other**
Failed Barrier	**ORPS Code**	**Functional Area**	**Work Process**
	Not Applicable	Operations	• Drills and Exercises
ISMS	**Consequence Code**		
Perform work within the controls	• Communications - Inadequate communications, roles, responsibilities • Notifications and Abnormal Events - Issues relating to investigation of operational events including quality of critiques and occurrence reports. • Training Quality - Inadequate training issues		
PER Screening Chair	**PER Screening Chair ID**	**PER Screening Chair Phone**	**PER Screening Date**
Brown, Nancy L	H0088797	(509) 373-0992	03/12/2009
PAAA REVIEW			
PAAA Screening	**PAAA Codes**	**Function Codes**	
PAAA, Non-NTS Reportable	• 10 CFR 830.122 (e)(1)	• Conduct of Operations (including Drills and Exercises)	
NTS Report Number	**NTS Report Date**		
Repetitive / Recurrent	**Programmatic**	**Intentional Violation / Misrepresentation**	
No	No	No	
PAAA Screening Comments			
PAAA Reviewer Name	**PAAA Review Date**		
Anderson, Craig E	03/12/2009		
PAAA Approver Name	**PAAA Approve Date**		
Anderson, Craig E	03/13/2009		
CAUSE ANALYSIS			
Description of Occurrence			

Weakness in Emergency Response Program implementation is indicated based on several instances in which WRPS Base Operations and 222-S Laboratory management team did not implement approved abnormal response procedures following indications of abnormal operating conditions as documented in WRPS-0900518, "Contract No. DE-AC27-08RV14800 - Washington River Protection Solutions LLC (WRPS) Response to Abnormal Events Surveillance S-09-ESQ-TANKFARM-003."

The surveillance was performed to evaluate WRPS response to indications of abnormal events since assuming responsibility for operation of the Tank Farms and 222-S Laboratory. The surveillance team evaluated WRPS response to abnormal events from the period October 1, 2008 through December 31, 2008.

The U. S. Department of Energy, Office of River Protection (DOE-ORP) expressed concern that the TOC has not implemented a culture where management and supervisory personnel believe observed or reported abnormal indications, and provide protection to workers and/or equipment until indications are validated or proven wrong. The ORP also expressed concern that WRPS did not self-identify some examples of deficiencies. The surveillance resulted in one concern and six supporting findings. This Root and Common Cause Analysis addressed the following issues:

Concern S-09-ESQ-TANKFARMv-003-CO1 - Weakness in Emergency Response Program implementation is indicated based on several instances in which WRPS Base Operations and 222-S Laboratory management team did not implement approved abnormal response procedures following indications of abnormal operating conditions;

Finding S-09-ESQ-TANKFARM-003-Fo1 - Alarm Response procedures for Tank High Pressure alarms were not utilized for AW Tank Farm high pressure alarms as required;

Finding S-09-ESQ-TANKFARM-003-F02 - Abnormal Operating Procedure immediate actions were not taken for elevated airborne radioactivity levels identified during decontamination activities at the 204-AR decontamination facility;

Finding S-09-ESQ-TANKFARM-003-F03 - Immediate and follow-up actions contained in ER-P-222S-009, "Spill/Release/Continuous Air Monitor Alarm," were not initiated or completed for a spill of radioactive material at 222-S laboratories;

Finding S-09-ESQ-TANKFARM-003-F04 - General Radiological Work Permits are inappropriately utilized for emergency response activities;

Finding S-09-ESQ-TANKFARM-003-F05 - Conduct of Operations, Radiological Control and 1H controls implemented during initial event response, and subsequent planned response actions for the 702-AZ spill were not adequate to prevent additional personnel exposures to tank vapors and tank ventilation condensate; and

Finding S-09-ESQ-TANKFARM-003-F06 - IHI Technicians have not been trained on response actions for tank over-pressure alarms.

Extent of Condition

Concern 1: Weaknesses in WRPS response to abnormal conditions are evident based on the findings cited in this report. Additionally, a search of the River Protection Project (RPP) Lessons Learned database revealed 29 reports containing key word "conservative decision."

Finding 1: A review of past problem evaluation requests (PERs) indicates no adverse trends of these causal factors. A review of thirty-four (34) Double Shell Tank (DST) ARPs indicated inconsistencies between ARPs. Although this inconsistency between ARPs did not contribute to this event, the inconsistencies could lead to future human errors.

Finding 2: A search of the Problem Evaluation Request (PER) database was conducted using the consequence codes applied to WRPS-PER-2008-0269; no records were returned in this search. Discussions with Base Operations Radiological Control personnel could not identify any similar events within the past "few" years. The last known similar event took place greater then five years ago where an elevated air sample was believed to be radon and later found to be associated with a workplace event involving the spread of airborne contamination. The events are similar in that both areas were not controlled as the air sample was believed to be radon.

Finding 3: The facility practice and procedures are designed to limit radiological contamination within the engineered controls of the laboratory fume hoods, glove boxes, and hot cells. The hoods and hot cells are located within radiological areas that are typically maintained free of removable radioactive contamination, but are posted as a Contamination Areas or Radiological Boundary Areas for efficient operation. This configuration is unique to the 222-S Laboratory.

Finding 4: Base Operations and 222-S both use General RWPs as described. The Single Shell Tank (SST) Retrieval and Closure organization operate to a General RWP except when an alarm or abnormal condition occurs. In which case, they stop the job, exit the area, and re-ACE under a Job-Specific RWP for investigative surveys.

Finding 5: No EOC warranted.

Finding 6: A review of Health Physics Technician (HPT) training was conducted and it was determined that the path forward for IHTs would be to provide general awareness and response training as part of IHT continuing training, similar to the training received by the HPTs.

Safety Significance

Concern 1: Although no actual adverse impacts to personnel or the environment occurred as a result of these incidents, the potential exists. A questioning attitude and conservative decision making mentality is imperative to a healthy safety culture within the Tank Operations Contractor (TOC).

Finding 1: It is highly unlikely that radiological conditions would change in working areas of 241-AW Tank Farm as a result of a primary ventilation shut down lasting approximately 30 minutes. Multiple radiological surveys have been performed at all tank farms for primary ventilation outages lasting weeks and months without detecting fugitive radioactive emissions.

Finding 2: Not entering into the AOP for response to elevated airborne contamination levels could result in a potential uptake of radioactivity by personnel.

Finding 3: The spread of contamination event associated with this finding resulted in no impact to human safety, the

environment, or equipment. Identification and decontamination of the areas within the 222-S Laboratory were completed.

Finding 4: Use of a General RWP is not a safety issue. Limits are set for the General RWP and not exceeded in response. Dose is still recorded and monitoring instrumentation is used.

Finding 5: No potential affect to human, environmental, or equipment safety was found as a result of this review.

Finding 6: No potential affect to human, environmental, or equipment safety was found as a result of this review.

Generic Implications

Concern 1: Failure to address the common causes identified for this event could lead to programmatic failures and could cause lasting and costly effects to WRPS.

Finding 1: A fact finding meeting was held to review inconsistent responses to five ventilation shut down events that occurred over an eight-day period. It was determined that the ARPs for primary ventilation outages are not consistent between the various tank farms. Corrective actions were implemented to review all ARPs associated with tank high pressure alarms and fan failures and ensure they are consistent across DST facilities.

Finding 2: Improper posting of radiological areas to identify actual conditions could lead to unnecessary personnel exposures.

Finding 3: The root cause has potential implications for other emergency versus routine conditions and situations. The clarity and understanding of procedures to know when to enter an emergency response procedure is vital to the well-being of personnel.

Finding 4: Utilization of a General RWP for response to these alarms in itself does not result in placing personnel or the environment at risk.

Finding 5: No generic implications have been identified in response to this review.

Finding 6: No generic implications have been identified in response to this review.

Remedial Corrective Action

Concern 1:

Compensatory measures were considered/invoked at the time each individual event occurred. In addition, as a process improvement initiative the Radiological Control organization has increased the number of Radiological Control Supervisors in efforts to more effectively monitor and control work (verified complete by S. D. Hyman 3/31/09).

Also, a Conduct of Operations Council (COOC) was established on March 24, 2009. This council is the governing body for promoting continuous improvement in Conduct of Operations for the TOC. Goals of the COOC are to: 1) promote excellence and continuous improvement in Con Ops (including Radiological Practices), 2) implement process changes that integrate Con Ops, human performance initiative (HPI), and Integrated Environment, Safety and Health Management System (ISMS), and 3) provide oversight and direction for company-wide Conduct of Operations and HPI related activities, guidelines, priorities, monitoring, overall program effectiveness, communication, and lessons learned.

Finding 1:

Shift Managers were provided the following Shift Instructions on October 17, 2008 by the Shift Operations Manager: "Review the Alarm Response Procedures (ARPs) associated with a loss of primary ventilation in each tank farm. Remember, there may be several alarms as a result of a loss of primary ventilation. Ensure all of the required actions for each valid alarm are completed. Additionally, before restoring general access to the affected farm, ensure that the farm has been surveyed/monitored/swept by both an IHT AND an HPT. Brief your shift personnel on these requirements so that they know to review all applicable ARPs on a loss of primary ventilation."

The 241-AW Tank Farm was surveyed for radiological conditions upon discovery the survey had not been performed the day previously. No change in conditions were discovered. (ref. WRPS-PER-2008-0269)

Finding 2:

An appropriate level of Progressive Performance Management (PPM) was applied at the time of the event (verified complete by S. D. Hyman 3/31/09)

Following discussions with the HP, the area was immediately posted. The HPT who was in the area performing routine surveillances had nasal smears performed and was sent to the whole body counter for analysis. All in vitro and WBC analysis identified no uptake of radioactivity.

Finding 3:

DOE-ORP debriefed WRPS management on January 15, 2009 regarding the surveillance, including Finding S-09-ESQ-

TANKFARM-003-F03 (Immediate and follow-up actions contained in ERP-222S-009, "Spill/Release/Continuous Air Monitor Alarm," were not initiated or completed for a spill of radioactive material at 222-S Laboratories). Immediate actions were taken by the 222-S Laboratory Facility manager in response to the finding. A verbal briefing of the 222-S Laboratory Facility Operations Managers (FOMs) and Building Emergency Directors (BEDs) was conducted. During that briefing, a protocol for responding to contamination detected in the laboratory radiological areas, but outside of a fume hood, glovebox, or hot cell, was established. This protocol, while undocumented pending generation of a procedure (ATS-LO-200-110), included:

- Stop work
- Orderly egress from contamination areas
- Development of Recovery Plan
- Development of job-specific RWP
- Review and approval of Recovery Plan by Operations Management.

Only after these conditions were met would access be allowed back into the contamination area to investigate cause and correct.

In addition, a new procedure, ATS-LO-200-110, "222-S Laboratory Response to Contamination Detected in Laboratory Radiological Areas," was developed and has been issued (effective date March 10, 2009). This provides a documented protocol and direction to all 222-S personnel for response to contamination detected in laboratory radiological areas. Appropriate personnel have been trained on this procedure.

In conjunction with the issuance of ATS-LO-200-110, a revision to ERP-222S-009, "Spill/Release/Continuous Air Monitor Alarm," was issued March 10, 2009. This revision clarified the entry criteria for use of this procedure by making it specific to a spill or release of hazardous/radiological material.

Finding 4:

No remedial or compensatory measures required for this Finding.

Finding 5:

No remedial or compensatory measures required for this Finding.

Finding 6:

Course 35E001, "TOC Emergency Response Organization Facility Specific Initial Training," was provided to IHTs.

Causal Analysis, Apparent Cause and/or Root Cause Analysis

A root cause analysis was performed individually for each of the six findings. The analyses were performed to define the most basic causes that explain why the event occurred, provide recommendations to remedy the problems, and prevent recurrence of the problems. The individual Root Cause Analyses were then evaluated using a common cause analysis (CCA) approach to characterize symptoms of organization and programmatic issues as well as human errors.

The CCA identified three common causes associated with the findings and one concern. These were then evaluated against corrective action plans and actions taken in response to the six individual findings listed in the surveillance report to determine their adequacy and to note additional improvement opportunities. As a result, a negative determination was made that the event causal factors were being addressed to prevent recurrence, resulting in three judgments of need being identified. These include:

1. Reestablish a culture committed to procedural compliance, conservative decision making, and questioning attitude
2. Perform procedure reviews for consistency and perform field observations to ensure procedure compliance and effective communications
3. Strengthen training and qualification requirements relied upon to implement expectations

Detailed root and common cause analysis to address the Findings and Concern is captured in the attached, "XXXXX."

CORRECTIVE ACTIONS

Actionee	Action Due Date	E-STARS Number
Reynolds, Tammy R	05/15/2009	WRPS-PER-2009-0385.1

Action

CC-01 Complete a review of Double-Shell Tank Pressurization related Alarm Response Procedures (ARPs), Abnormal Operating Procedures (AOPs), and Emergency Response Procedures (ERPs). Revise as necessary to ensure consistency in response actions and level of controls.

Deliverable: Copy of evaluation and revised procedures as necessary.

Corrective Action Attachments

- 0900518_09-ESQ-082_WRPS_-_[0903111137].pdf
- 2009-0385.11 Additional Rosters.pdf
- ARP/AOP/ERP Evaluation
- Concern 1 - Remedial CA, TFC-CHARTER-42.doc
- Finding 1 - Remedial CA, Base Operations Shift Instructions 10-17-08.doc
- Finding 1 - Remedial CA, EIR-2008-024.pdf
- Finding 3 - Remedial CA, ATS-LO-200-110.doc
- Finding 3 - Remedial CA, ERP-222S-009.doc
- Finding 6 - Remedial CA, Course 35E001 ITEM Report.pdf
- Link to PER
- RCA/CCA Report.pdf
- SigPER 2009-0385.11 Support Docs.pdf

Actionee	Action Due Date	E-STARS Number
Roueche, Kim A	04/24/2009	WRPS-PER-2009-0385.2

Action

CC-02 Clarify roles and responsibilities for Industrial Hygiene management within Operations to clearly identify chain of command structure during abnormal and emergency events.

Deliverable: Copy of communications material and course completion rosters .

Corrective Action Attachments

- 0385.2 Course Completion Rosters.pdf
- 0900518_09-ESQ-082_WRPS_-_[0903111137].pdf
- 2009-0385.11 Additional Rosters.pdf
- Concern 1 - Remedial CA, TFC-CHARTER-42.doc
- Finding 1 - Remedial CA, Base Operations Shift Instructions 10-17-08.doc
- Finding 1 - Remedial CA, EIR-2008-024.pdf
- Finding 3 - Remedial CA, ATS-LO-200-110.doc
- Finding 3 - Remedial CA, ERP-222S-009.doc
- Finding 6 - Remedial CA, Course 35E001 ITEM Report.pdf
- CC-02 Clarify roles and responsibilities for Industrial Hygiene management within Operations to clearly identify chain of comman
- Link to PER
- RCA/CCA Report.pdf
- SigPER 2009-0385.11 Support Docs.pdf

Actionee	Action Due Date	E-STARS Number
Brosee, Neil	05/27/2009	WRPS-PER-2009-0385.3

Action

CC-03 Provide face-to-face briefings to reiterate the expectations for Tank Farm, 222-S, and SST Retrieval and Closure personnel for timely identification and evaluation of conditions adverse to quality, safety, health, operability, and the environment (as required by TFC-ESHQ-Q_C-C-01, "Problem Evaluation Request.") Also include expectations on the importance of a questioning attitude, conservative decision making, procedure compliance, and formal communications.

Deliverable: Summary of briefing material and course completion rosters.

Corrective Action Attachments

- 0900518_09-ESQ-082_WRPS_-_[0903111137].pdf
- 2009-0385 CA3 Briefing Material.pdf
- 2009-0385 CA3 Rosters.pdf
- 2009-0385.11 Additional Rosters.pdf
- Concern 1 - Remedial CA, TFC-CHARTER-42.doc
- Finding 1 - Remedial CA, Base Operations Shift Instructions 10-17-08.doc
- Finding 1 - Remedial CA, EIR-2008-024.pdf
- Finding 3 - Remedial CA, ATS-LO-200-110.doc
- Finding 3 - Remedial CA, ERP-222S-009.doc
- Finding 6 - Remedial CA, Course 35E001 ITEM Report.pdf
- Link to PER
- RCA/CCA Report.pdf
- SigPER 2009-0385.11 Support Docs.pdf

Actionee	Action Due Date	E-STARS Number
Keith, Lloyd J	07/31/2009	WRPS-PER-2009-0385.4

Action

CC-04 Update operator continuing training material to include Human Performance Initiative (HPI) training.

Deliverable: Copy of updated operator continuing training material.

Corrective Action Attachments

- 0900518_09-ESQ-082_WRPS_-_[0903111137].pdf
- 2009-0385.11 Additional Rosters.pdf
- Concern 1 - Remedial CA, TFC-CHARTER-42.doc
- Finding 1 - Remedial CA, Base Operations Shift Instructions 10-17-08.doc
- Finding 1 - Remedial CA, EIR-2008-024.pdf
- Finding 3 - Remedial CA, ATS-LO-200-110.doc
- Finding 3 - Remedial CA, ERP-222S-009.doc
- Finding 6 - Remedial CA, Course 35E001 ITEM Report.pdf
- HPI...A Focus on Distraction_Classroom Presentation.ppsm
- HPI...A Focus on Distraction_Classroom Presentation.ppt
- Link to PER
- RCA/CCA Report.pdf
- SigPER 2009-0385.11 Support Docs.pdf

Actionee	Action Due Date	E-STARS Number
Reynolds, Tammy R	04/24/2009	WRPS-PER-2009-0385.5

Action

CC-05 Reinforce the requirement for Shift Operations to perform one table-top drill per shift per month. The table-top drill should involve Shift personnel (Nuclear Chemical Operators (NCOs), Health Physics Technicians (HPTs), and Industrial Hygiene Technicians (IHTs), as available) and consider "what-if" situations. Scenarios to evaluate should include review of Alarm Response Procedures (ARPs), Abnormal Operating Procedures (AOPs)and Emergency Response Procedures (ERPs). Communicate expectations to Shift Managers.

Deliverable: Issued memo of expectationsto Shift Managers and tickler (see TF-OPS-OPER-CD-30) for reminder.

Corrective Action Attachments

- 0900518_09-ESQ-082_WRPS_-_[0903111137].pdf
- 2009-0385.11 Additional Rosters.pdf
- Concern 1 - Remedial CA, TFC-CHARTER-42.doc
- Finding 1 - Remedial CA, Base Operations Shift Instructions 10-17-08.doc
- Finding 1 - Remedial CA, EIR-2008-024.pdf
- Finding 3 - Remedial CA, ATS-LO-200-110.doc
- Finding 3 - Remedial CA, ERP-222S-009.doc
- Finding 6 - Remedial CA, Course 35E001 ITEM Report.pdf
- Link to PER
- Message to Shift Managers
- Table-Top Drill Expectation
- RCA/CCA Report.pdf
- SigPER 2009-0385.11 Support Docs.pdf
- Table-Top Drill Tickler

Actionee	Action Due Date	E-STARS Number
Gregory, Rob	07/30/2009	WRPS-PER-2009-0385.6

Action

CC-06 Perform at least six WRPS senior management oversight observations of table-top drills to monitor and ensure effectiveness. Continue oversight until satisfactory performance is achieved.

Deliverable: Document observations on MOP form.

Corrective Action Attachments

- 0900518_09-ESQ-082_WRPS_-_[0903111137].pdf
- 2009-0385.11 Additional Rosters.pdf
- Concern 1 - Remedial CA, TFC-CHARTER-42.doc
- Finding 1 - Remedial CA, Base Operations Shift Instructions 10-17-08.doc
- Finding 1 - Remedial CA, EIR-2008-024.pdf
- Finding 3 - Remedial CA, ATS-LO-200-110.doc
- Finding 3 - Remedial CA, ERP-222S-009.doc
- Finding 6 - Remedial CA, Course 35E001 ITEM Report.pdf
- Link to PER
- RCA/CCA Report.pdf
- SigPER 2009-0385.11 Support Docs.pdf
- TABLETOP MOP 4-5-09.pdf
- Tabletop MOPs.pdf

Actionee	Action Due Date	E-STARS Number
Brosee, Neil	04/24/2009	WRPS-PER-2009-0385.7

Action

CC-07 Re-emphasize an aggressive Management Observation Program (MOP) to continually perform management oversight and encourage routine feedback. Focus areas should include Conduct of Operations, Radiological Control Operations, alarm

response and table-top drills.

Deliverable: Issued memo of expectations to MOP designated personnel.

Corrective Action Attachments

- 0900518_09-ESQ-082_WRPS_-_[0903111137].pdf
- 2009-0385.11 Additional Rosters.pdf
- Concern 1 - Remedial CA, TFC-CHARTER-42.doc
- Finding 1 - Remedial CA, Base Operations Shift Instructions 10-17-08.doc
- Finding 1 - Remedial CA, EIR-2008-024.pdf
- Finding 3 - Remedial CA, ATS-LO-200-110.doc
- Finding 3 - Remedial CA, ERP-222S-009.doc
- Finding 6 - Remedial CA, Course 35E001 ITEM Report.pdf
- Link to PER
- RCA/CCA Report.pdf
- SigPER 2009-0385.11 Support Docs.pdf
- WRPS-0900641.pdf

Actionee	Action Due Date	E-STARS Number
Reynolds, Tammy R	06/30/2009	WRPS-PER-2009-0385.8

Action

CATPR-01-01 Ensure shift managers are briefed on revised ARPs, AOPs, and ERPs in conjunction with CC-01.

Deliverable: Copy of briefing material and course completion rosters.

Corrective Action Attachments

- 0900518_09-ESQ-082_WRPS_-_[0903111137].pdf
- 2009-0385.11 Additional Rosters.pdf
- Concern 1 - Remedial CA, TFC-CHARTER-42.doc
- Finding 1 - Remedial CA, Base Operations Shift Instructions 10-17-08.doc
- Finding 1 - Remedial CA, EIR-2008-024.pdf
- Finding 3 - Remedial CA, ATS-LO-200-110.doc
- Finding 3 - Remedial CA, ERP-222S-009.doc
- Finding 6 - Remedial CA, Course 35E001 ITEM Report.pdf
- Link to PER
- PER-2009-0385.8.pdf
- RCA/CCA Report.pdf
- SigPER 2009-0385.11 Support Docs.pdf

Actionee	Action Due Date	E-STARS Number
Reynolds, Tammy R	05/24/2009	WRPS-PER-2009-0385.9

Action

CATPR-01-02 Ensure shift managers are briefed on the importance of 3-way communication including complete directions, repeat back, and acknowledgement.

Deliverable: Copy of briefing material and course completion rosters.

Corrective Action Attachments

- 0900518_09-ESQ-082_WRPS_-_[0903111137].pdf
- 2009-0385.11 Additional Rosters.pdf
- commroster.pdf
- comroster.pdf
- Concern 1 - Remedial CA, TFC-CHARTER-42.doc
- Finding 1 - Remedial CA, Base Operations Shift Instructions 10-17-08.doc
- Finding 1 - Remedial CA, EIR-2008-024.pdf
- Finding 3 - Remedial CA, ATS-LO-200-110.doc
- Finding 3 - Remedial CA, ERP-222S-009.doc
- Finding 6 - Remedial CA, Course 35E001 ITEM Report.pdf
- Link to PER
- RCA/CCA Report.pdf
- SigPER 2009-0385.11 Support Docs.pdf
- SM 3-Way Comm Briefing

Actionee	Action Due Date	E-STARS Number
Rolph, Jim T	04/24/2009	WRPS-PER-2009-0385.10

Action

CATPR-02-01 Review and update TFC-ESHQ-RP_MON-P-09, "Grab Air Sampling," to include immediate actions and notification to the Shift Office of preliminary analysis identifying high airborne contamination levels.

Deliverable: Copy of revised procedure.

Corrective Action Attachments

- 0900518_09-ESQ-082_WRPS_-_[0903111137].pdf
- 2009-0385.11 Additional Rosters.pdf
- Concern 1 - Remedial CA, TFC-CHARTER-42.doc
- Finding 1 - Remedial CA, Base Operations Shift Instructions 10-17-08.doc
- Finding 1 - Remedial CA, EIR-2008-024.pdf
- Finding 3 - Remedial CA, ATS-LO-200-110.doc
- Finding 3 - Remedial CA, ERP-222S-009.doc
- Finding 6 - Remedial CA, Course 35E001 ITEM Report.pdf
- Link to PER
- RCA/CCA Report.pdf
- SigPER 2009-0385.11 Support Docs.pdf
- Revised Grab Air Sampling Procedure

Actionee	Action Due Date	E-STARS Number
Brannan, Patrick (Brad)	05/30/2009	WRPS-PER-2009-0385.11

Action

DC-02-01 Provide briefing to HPTs and Radiological Control FLMs on this event and procedural changes made in action CATPR-02-01.

Deliverable: Copy of briefing material and course completion roster.

Corrective Action Attachments

- 0900518_09-ESQ-082_WRPS_-_[0903111137].pdf
- 2009-0385.11 Additional Rosters.pdf
- Concern 1 - Remedial CA, TFC-CHARTER-42.doc
- Finding 1 - Remedial CA, Base Operations Shift Instructions 10-17-08.doc
- Finding 1 - Remedial CA, EIR-2008-024.pdf
- Finding 3 - Remedial CA, ATS-LO-200-110.doc
- Finding 3 - Remedial CA, ERP-222S-009.doc
- Finding 6 - Remedial CA, Course 35E001 ITEM Report.pdf
- Link to PER
- RCA/CCA Report.pdf
- SigPER 2009-0385.11 Support Docs.pdf

Actionee	Action Due Date	E-STARS Number
Hardy, Don B	04/30/2009	WRPS-PER-2009-0385.12

Action

CATPR-03-01 Revise ERP-222S-009 to clarify the entrance criteria for spills, releases, and CAM alarms.

Deliverable: Approved procedure.

Corrective Action Attachments

- 0900518_09-ESQ-082_WRPS_-_[0903111137].pdf
- 2009-0385.11 Additional Rosters.pdf
- Concern 1 - Remedial CA, TFC-CHARTER-42.doc
- e-mail DBH.msg
- ERP-222-S-009.doc
- Finding 1 - Remedial CA, Base Operations Shift Instructions 10-17-08.doc
- Finding 1 - Remedial CA, EIR-2008-024.pdf
- Finding 3 - Remedial CA, ATS-LO-200-110.doc
- Finding 3 - Remedial CA, ERP-222S-009.doc
- Finding 6 - Remedial CA, Course 35E001 ITEM Report.pdf
- Link to PER
- RCA/CCA Report.pdf
- SigPER 2009-0385.11 Support Docs.pdf

Actionee	Action Due Date	E-STARS Number
Hardy, Don B	04/30/2009	WRPS-PER-2009-0385.13

Action

CATPR-03-02 Develop procedure for preplanned actions for response to contamination in a radiological area (ATS-LO-200-110).

Deliverable: Approved procedure.

Corrective Action Attachments

- 0900518_09-ESQ-082_WRPS_-_[0903111137].pdf
- 2009-0385.11 Additional Rosters.pdf
- ATS-LO-200-110.doc
- Concern 1 - Remedial CA, TFC-CHARTER-42.doc
- Finding 1 - Remedial CA, Base Operations Shift Instructions 10-17-08.doc
- Finding 1 - Remedial CA, EIR-2008-024.pdf
- Finding 3 - Remedial CA, ATS-LO-200-110.doc
- Finding 3 - Remedial CA, ERP-222S-009.doc
- Finding 6 - Remedial CA, Course 35E001 ITEM Report.pdf
- Link to PER
- RCA/CCA Report.pdf
- SigPER 2009-0385.11 Support Docs.pdf

Actionee	Action Due Date	E-STARS Number
Hardy, Don B	05/29/2009	WRPS-PER-2009-0385.14

Action

CATPR-03-03 Perform a drill regarding the use of ERP-222S-009 and ATS-LO-200-110 for response to contamination in a radiological area.

Deliverable: Attendance roster of drill.

Corrective Action Attachments

- 0900518_09-ESQ-082_WRPS_-_[0903111137].pdf
- 2009-0385.11 Additional Rosters.pdf
- Concern 1 - Remedial CA, TFC-CHARTER-42.doc
- Finding 1 - Remedial CA, Base Operations Shift Instructions 10-17-08.doc
- Finding 1 - Remedial CA, EIR-2008-024.pdf
- Finding 3 - Remedial CA, ATS-LO-200-110.doc
- Finding 3 - Remedial CA, ERP-222S-009.doc
- Finding 6 - Remedial CA, Course 35E001 ITEM Report.pdf
- Link to PER
- Radioactive Waste Container Accident Drill Report.pdf
- Response to Radiological Contamination Event Drill Report.pdf
- RCA/CCA Report.pdf
- SigPER 2009-0385.11 Support Docs.pdf

Actionee	Action Due Date	E-STARS Number
Rolph, Jim T	07/30/2009	WRPS-PER-2009-0385.15

Action

CATPR-04-01 Evaluate the implementation of requirements of HNF-5183 as they apply to General RWPs. Initiate revision to HNF-5183 or RWPs per the results of the evaluation.

Deliverable: Copy of evaluation and revised manual/RWPs,as necessary.
*****
Approved due date extension to 7/30/09. tls 6/15/09

Corrective Action Attachments

- 0900518_09-ESQ-082_WRPS_-_[0903111137].pdf
- 2009-0385.11 Additional Rosters.pdf
- Concern 1 - Remedial CA, TFC-CHARTER-42.doc
- E-tars Action2009-0385.15 RA .doc
- Finding 1 - Remedial CA, Base Operations Shift Instructions 10-17-08.doc
- Finding 1 - Remedial CA, EIR-2008-024.pdf
- Finding 3 - Remedial CA, ATS-LO-200-110.doc
- Finding 3 - Remedial CA, ERP-222S-009.doc
- Finding 6 - Remedial CA, Course 35E001 ITEM Report.pdf
- Link to PER
- RCA/CCA Report.pdf
- SigPER 2009-0385.11 Support Docs.pdf

Actionee	Action Due Date	E-STARS Number
Hyman, Sandra D	04/24/2009	WRPS-PER-2009-0385.16

Action

CC-04-01 Schedule Radiological Control to perform a minimum of 2 management observations a month, focusing on compliance to the TFRCM and implementation of 10 CFR 835, "Occupational Radiation Protection," and HNF-MP-5184, "Washington River Protection Solutions Radiation Protection Program (RPP)."

Deliverable: Copy of schedule to include expectations, topical areas, and assignees.

Corrective Action Attachments

- 0900518_09-ESQ-082_WRPS_-_[0903111137].pdf
- 2009-0385.11 Additional Rosters.pdf
- Concern 1 - Remedial CA, TFC-CHARTER-42.doc
- Finding 1 - Remedial CA, Base Operations Shift Instructions 10-17-08.doc
- Finding 1 - Remedial CA, EIR-2008-024.pdf
- Finding 3 - Remedial CA, ATS-LO-200-110.doc
- Finding 3 - Remedial CA, ERP-222S-009.doc
- Finding 6 - Remedial CA, Course 35E001 ITEM Report.pdf
- Link to PER
- RCA/CCA Report.pdf
- SigPER 2009-0385.11 Support Docs.pdf
- WRPS-0900621 - Closure of Corrective Action CC-04-01 For WRPS-PER-2009-0385 16 .pdf

Actionee	Action Due Date	E-STARS Number
Milliken, Nancy J	05/24/2009	WRPS-PER-2009-0385.17

Action

CA-05-01 Issue Lessons Learned bulletin emphasizing the importance of proper communication, contingency planning, response to vapors, and voluntary respirator use.

Deliverable: Copy of issued bulletin.

Corrective Action Attachments

- 0900518_09-ESQ-082_WRPS_-_[0903111137].pdf
- 2009-0385.11 Additional Rosters.pdf
- Concern 1 - Remedial CA, TFC-CHARTER-42.doc
- Finding 1 - Remedial CA, Base Operations Shift Instructions 10-17-08.doc
- Finding 1 - Remedial CA, EIR-2008-024.pdf
- Finding 3 - Remedial CA, ATS-LO-200-110.doc
- Finding 3 - Remedial CA, ERP-222S-009.doc
- Finding 6 - Remedial CA, Course 35E001 ITEM Report.pdf
- Link to PER
- IB-09-039 ORP Surveillance-Response to Abnormal Events.pdf
- RCA/CCA Report.pdf
- SigPER 2009-0385.11 Support Docs.pdf

Actionee	Action Due Date	E-STARS Number
Jones, Mark W	06/24/2009	WRPS-PER-2009-0385.18

Action

CA-05-02 Evaluate compiling the IH responses provided in Finding S-09-ESQ-TANKFARM-003-F05 to increase the ease of information retrieval. Incorporate information into current documents or develop new document (plan, procedure, etc.) to capture the information provided.

Deliverable: Copy of new or revised document(s).

Corrective Action Attachments

- 0900518_09-ESQ-082_WRPS_-_[0903111137].pdf
- 2009-0385.11 Additional Rosters.pdf
- Concern 1 - Remedial CA, TFC-CHARTER-42.doc
- Finding 1 - Remedial CA, Base Operations Shift Instructions 10-17-08.doc
- Finding 1 - Remedial CA, EIR-2008-024.pdf
- Finding 3 - Remedial CA, ATS-LO-200-110.doc
- Finding 3 - Remedial CA, ERP-222S-009.doc
- Finding 6 - Remedial CA, Course 35E001 ITEM Report.pdf
- Link to PER
- RCA/CCA Report.pdf
- SigPER 2009-0385.11 Support Docs.pdf
- WRPS-PER-2009-0385 18.pdf

Actionee	Action Due Date	E-STARS Number
Jones, Mark W	08/24/2009	WRPS-PER-2009-0385.19

Action

CA-06-01 Update course 350292 to include a discussion/demonstration of alarm response actions including AOPs, ARPs, and ERPs.

Deliverable: Updated training course material.

Corrective Action Attachments

- 0900518_09-ESQ-082_WRPS_-_[0903111137].pdf
- 2009-0385.11 Additional Rosters.pdf

- Concern 1 - Remedial CA, TFC-CHARTER-42.doc
- Finding 1 - Remedial CA, Base Operations Shift Instructions 10-17-08.doc
- Finding 1 - Remedial CA, EIR-2008-024.pdf
- Finding 3 - Remedial CA, ATS-LO-200-110.doc
- Finding 3 - Remedial CA, ERP-222S-009.doc
- Finding 6 - Remedial CA, Course 35E001 ITEM Report.pdf
- Link to PER
- RCA/CCA Report.pdf
- SigPER 2009-0385.11 Support Docs.pdf

Actionee	Action Due Date	E-STARS Number
Milliken, Nancy J	02/28/2010	WRPS-PER-2009-0385.20

Action

EPA-01 Perform an end point assessment.

1. Review objective evidence from all corrective actions to ensure completeness and adequacy.

2. Assess field operations for compliance to response requirements to abnormal operating conditions since January 2009.

-Review PER database for similar events.
-Review MOPs for similar events.

3. Interview selected operations personnel on changes in management expectations to determine extent of assimilation of corrective actions.

-Sample group should include (6) FLMs, (6) Shift Managers, (15) NCOs, (6) IHTs and (15) HPTs.

Deliverable: ESRB approved End Point Assessment Report.

Corrective Action Attachments

- 0900518_09-ESQ-082_WRPS_-_[0903111137].pdf
- 2009-0385.11 Additional Rosters.pdf
- Concern 1 - Remedial CA, TFC-CHARTER-42.doc
- Finding 1 - Remedial CA, Base Operations Shift Instructions 10-17-08.doc
- Finding 1 - Remedial CA, EIR-2008-024.pdf
- Finding 3 - Remedial CA, ATS-LO-200-110.doc
- Finding 3 - Remedial CA, ERP-222S-009.doc
- Finding 6 - Remedial CA, Course 35E001 ITEM Report.pdf
- Link to PER
- RCA/CCA Report.pdf
- SigPER 2009-0385.11 Support Docs.pdf

ATTACHMENTS

0900518_09-ESQ-082_WRPS_-_[0903111137].pdf

2009-0385.11 Additional Rosters.pdf

Concern 1 - Remedial CA, TFC-CHARTER-42.doc

Finding 1 - Remedial CA, Base Operations Shift Instructions 10-17-08.doc

Finding 1 - Remedial CA, EIR-2008-024.pdf

Finding 3 - Remedial CA, ATS-LO-200-110.doc

Finding 3 - Remedial CA, ERP-222S-009.doc

Finding 6 - Remedial CA, Course 35E001 ITEM Report.pdf

Link to PER

RCA/CCA Report.pdf

SigPER 2009-0385.11 Support Docs.pdf

AUDIT HISTORY

Change Date	Auditor	Comments
03/12/2009 14:15	Brown, Nancy L	'PER Screening Comments' was changed.
03/13/2009 09:10	Owen, Annette	Responsible Manager Task Launched by Owen, Annette
04/07/2009 10:19	Mata, Beth L	'Safety Significance' was changed. 'Extent of Condition' was changed. 'Generic Implications' was changed. 'Description of Occurrence' was changed.

		'Remedial Corrective Action' was changed. 'Causal Analysis' was changed.
04/07/2009 10:20	Mata, Beth L	'Description of Occurrence' was changed.
04/07/2009 10:38	Mata, Beth L	'Remedial Corrective Action' was changed.
04/08/2009 09:54	Mata, Beth L	'Remedial Corrective Action' was changed.
04/08/2009 12:38	Steelman, Tracy L	Corrective actions Launched by Steelman, Tracy L
04/16/2009 08:01	Glaman, Linda R	'Independent Assessment Review' was changed.
06/15/2009 13:02	Steelman, Tracy L	Change to Cause Analysis screen/Corrective Action plan.
06/15/2009 13:03	Steelman, Tracy L	Corrective Action item - modification to synchronize with E-STARS.'Action Due Date' was changed. Corrective Action item - modification to synchronize with E-STARS.'Action' was changed.

-- End of Report --
08/06/2009 10:02 AM

Task# WRPS-PER-2009-0385

E-STARS[R] Report
Task Detail Report
08/06/2009 1002

TASK INFORMATION			
Task#	WRPS-PER-2009-0385		
Subject	SIG; Results of DOE surveillance of WRPS Response to Abnormal Events		
Parent Task#		**Status**	Open
Reference		**Due**	03/19/2010
Originator	^PER Coordinator	**Priority**	Medium
Originator Phone		**Category**	PER
Origination Date	03/11/2009 1441	**Generic1**	None
Remote Task#		**Generic2**	None
Deliverable	PER Review	**Generic3**	None
Class	None	**View Permissions**	Global
Instructions	*No Instructions*		

ROUTING LISTS

1	Corrective actions Routing Lis	Active
	To launch Corrective actions.	
	• ^PER CAs - Assign - Awaiting Response - Due Date - 03/15/2010 0000 *Instructions:*	
	• Reynolds, Tammy R - Review - Awaiting Response - Due Date - 03/19/2010 0000 *Instructions:*	
	• Owen, Peter - Review - Reassigned - 05/20/2009 1135 *Instructions:*	
2	Responsible Manager	Inactive
	Perform RCA & CAP with End Point Assessment Criteria in accordance with TFC-ESHQ-Q_C-C-01, PER & TFC-ESHQ-Q_ADM-C-11, Root & Common Cause Analysis & Corrective Action Planning. 'Save' Causal tab on PER. Ensure PER is on ESRB agenda.	
	• Gregory, Rob - Assign - Completed with comments - 04/08/2009 1004 *Instructions:*	
	• Gregory, Rob - Assign - Withdrawn - 04/08/2009 1109 *Instructions:* Did you contact the originator about the PER? Document your contact in the response window.	
	• ^Independent Assessment Review - Review - Withdrawn - 04/08/2009 1109 *Instructions:* Independent Assessor Review	
	• Owen, Peter - Review - Concur with comments - 04/08/2009 1214 *Instructions:* Safety Management Representative Review	
3	Review Initial PER	Inactive
	Review New PER	
	• ^SO(Higham, Dale B) - Review - Concur - 03/11/2009 2023 *Instructions:*	
	• ^PER Screening(Brown, Nancy L) - Review - Concur - 03/12/2009 1406 *Instructions:*	
	• ^Mgr Review(Owen, Annette) - Review - Concur - 03/13/2009 0910	

Task# WRPS-PER-2009-0385

	Instructions:

ATTACHMENTS

Attachments	1. 0900518_09-ESQ-082_WRPS_-_[0903111137].pdf 2. 2009-0385.11 Additional Rosters.pdf 3. Concern 1 - Remedial CA, TFC-CHARTER-42.doc 4. Finding 1 - Remedial CA, Base Operations Shift Instructions 10-17-08.doc 5. Finding 1 - Remedial CA, EIR-2008-024.pdf 6. Finding 3 - Remedial CA, ATS-LO-200-110.doc 7. Finding 3 - Remedial CA, ERP-222S-009.doc 8. Finding 6 - Remedial CA, Course 35E001 ITEM Report.pdf 9. Link to PER 10. RCA/CCA Report.pdf 11. SigPER 2009-0385.11 Support Docs.pdf

COMMENTS

Poster	Tackett, Liz A - 03/13/2009 0814
	Report Response
	I would like to review the report response prior to issuance Please. Thanks. Liz Tackett
Poster	Gregory, Rob (Mata, Beth L) - 04/08/2009 1004
	Feedback
	Results of the Root and Common Cause Analysis were discussed with Mr. Urie, Hoar, and Harkins of DOE/ORP.
Poster	Gregory, Rob (Mata, Beth L) - 04/08/2009 1004
	Completed
	The subject Root and Common Cause Analysis was presented to the ESRB on 3/31/09 and approved by the ESRB Chairman on 4/6/09. This action is complete, please launch Corrective Actions ASAP as some are near-term.
Poster	Owen, Peter - 04/08/2009 1214
	Owen, Pete -- Concur
	I have reviewed the RCA and CCA and concur with the findings and associated corrective actions. Pete Owen Manager, Shift Operations

TASK DUE DATE HISTORY

Modified	04/08/2009 1238 - ^PER Coordinator	**New Due Date**	03/19/2010 0000
Modified	03/13/2009 0910 - ^PER Coordinator	**New Due Date**	04/10/2009 1630
Modified	03/13/2009 0910 - ^PER Coordinator	**New Due Date**	04/18/2009 1630
Modified	03/11/2009 1441 - ^PER Coordinator	**New Due Date**	03/13/2009 1630

SUB TASK HISTORY

Subtask#	WRPS-PER-2009-0385.1	
Subject	WRPS-PER-2009-0385; SIG; CC-01 Complete a review of Double-Shell Tank Pressurization related Alarm Response Procedures (ARPs), Abnormal Operating Proc	
Originator	^PER CAs	
	Routing List	*No Active Routing List*
Subtask#	WRPS-PER-2009-0385.2	

Task# WRPS-PER-2009-0385		
Subject	WRPS-PER-2009-0385; SIG; CC-02 Clarify roles and responsibilities for Industrial Hygiene management within Operations to clearly identify chain of com	
Originator	^PER CAs	
	Routing List	*No Active Routing List*
Subtask#	WRPS-PER-2009-0385.3	
Subject	WRPS-PER-2009-0385; SIG; CC-03 Provide face-to-face briefings to reiterate the expectations for Tank Farm, 222-S, and SST Retrieval and Closure person	
Originator	^PER CAs	
	Routing List	*No Active Routing List*
Subtask#	WRPS-PER-2009-0385.4	
Subject	WRPS-PER-2009-0385; SIG; CC-04 Update operator continuing training material to include Human Performance Initiative (HPI) training. Deliverable: C	
Originator	^PER CAs	
	Routing List	*No Active Routing List*
Subtask#	WRPS-PER-2009-0385.5	
Subject	WRPS-PER-2009-0385; SIG; CC-05 Reinforce the requirement for Shift Operations to perform one table-top drill per shift per month. The table-top drill	
Originator	^PER CAs	
	Routing List	*No Active Routing List*
Subtask#	WRPS-PER-2009-0385.6	
Subject	WRPS-PER-2009-0385; SIG; CC-06 Perform at least six WRPS senior management oversight observations of table-top drills to monitor and ensure effectiven	
Originator	^PER CAs	
	Routing List	*No Active Routing List*
Subtask#	WRPS-PER-2009-0385.7	
Subject	WRPS-PER-2009-0385; SIG; CC-07 Re-emphasize an aggressive Management Observation Program (MOP) to continually perform management oversight and encoura	
Originator	^PER CAs	
	Routing List	*No Active Routing List*
Subtask#	WRPS-PER-2009-0385.8	
Subject	WRPS-PER-2009-0385; SIG; CATPR-01-01 Ensure shift managers are briefed on revised ARPs, AOPs, and ERPs in conjunction with CC-01. Deliverable: C	
Originator	^PER CAs	
	Routing List	*No Active Routing List*
Subtask#	WRPS-PER-2009-0385.9	
Subject	WRPS-PER-2009-0385; SIG; CATPR-01-02 Ensure shift managers are briefed on the importance of 3-way communication including complete directions, repeat	
Originator	^PER CAs	
	Routing List	*No Active Routing List*
Subtask#	WRPS-PER-2009-0385.10	
Subject	WRPS-PER-2009-0385; SIG; CATPR-02-01 Review and update TFC-ESHQ-RP_MON-P-09, "Grab Air Sampling," to include immediate actions and notification to th	

Task# WRPS-PER-2009-0385					
Originator	^PER CAs				
	Routing List	*No Active Routing List*			
Subtask#	WRPS-PER-2009-0385.11				
Subject	WRPS-PER-2009-0385; SIG; DC-02-01 Provide briefing to HPTs and Radiological Control FLMs on this event and procedural changes made in action CATPR-02-				
Originator	^PER CAs				
	Routing List	*No Active Routing List*			
Subtask#	WRPS-PER-2009-0385.12				
Subject	WRPS-PER-2009-0385; SIG; CATPR-03-01 Revise ERP-222S-009 to clarify the entrance criteria for spills, releases, and CAM alarms. Deliverable: Ap				
Originator	^PER CAs				
	Routing List	*No Active Routing List*			
Subtask#	WRPS-PER-2009-0385.13				
Subject	WRPS-PER-2009-0385; SIG; CATPR-03-02 Develop procedure for preplanned actions for response to contamination in a radiological area (ATS-LO-200-110).				
Originator	^PER CAs				
	Routing List	*No Active Routing List*			
Subtask#	WRPS-PER-2009-0385.14				
Subject	WRPS-PER-2009-0385; SIG; CATPR-03-03 Perform a drill regarding the use of ERP-222S-009 and ATS-LO-200-110 for response to contamination in a radiolog				
Originator	^PER CAs				
	Routing List	*No Active Routing List*			
Subtask#	WRPS-PER-2009-0385.15				
Subject	WRPS-PER-2009-0385; SIG; CATPR-04-01 Evaluate the implementation of requirements of HNF-5183 as the				
Originator	^PER CAs				
	Routing List	Corrective Action			
		Assignee	Rolph, Jim T	**Response**	Completed
		Assignee	Gregory, Rob	**Response**	
		Assignee	^Independent Assessment Review	**Response**	
Subtask#	WRPS-PER-2009-0385.16				
Subject	WRPS-PER-2009-0385; SIG; CC-04-01 Schedule Radiological Control to perform a minimum of 2 management observations a month, focusing on compliance to t				
Originator	^PER CAs				
	Routing List	*No Active Routing List*			
Subtask#	WRPS-PER-2009-0385.17				
Subject	WRPS-PER-2009-0385; SIG; CA-05-01 Issue Lessons Learned bulletin emphasizing the importance of proper communication, contingency planning, response to				
Originator	^PER CAs				
	Routing List	*No Active Routing List*			
Subtask#	WRPS-PER-2009-0385.18				

Task# WRPS-PER-2009-0385

Subject	WRPS-PER-2009-0385; SIG; CA-05-02 Evaluate compiling the IH responses provided in Finding S-09-ESQ-TANKFARM-003-F05 to increase the ease of informatio				
Originator	^PER CAs				
	Routing List	*No Active Routing List*			
Subtask#	WRPS-PER-2009-0385.19				
Subject	WRPS-PER-2009-0385; SIG; CA-06-01 Update course 350292 to include a discussion/demonstration of alarm response actions including AOPs, ARPs, and ERPs.				
Originator	^PER CAs				
	Routing List	Corrective Action			
		Assignee	Jones, Mark W	**Response**	
		Assignee	Gregory, Rob	**Response**	
		Assignee	^Independent Assessment Review	**Response**	Withdrawn
Subtask#	WRPS-PER-2009-0385.19.1				
Subject	WRPS-PER-2009-0385; SIG; CA-06-01 Update course 350292 to include a discussion/demonstration of alarm response actions including AOPs, ARPs, and ERPs.				
Originator	Jones, Mark W (Bowman, Tami A)				
	Routing List	*No Active Routing List*			
Subtask#	WRPS-PER-2009-0385.19.2				
Subject	WRPS-PER-2009-0385; SIG; CA-06-01 Update course 350292 to include a discussion/demonstration of alarm response actions including AOPs, ARPs, and ERPs.				
Originator	Jones, Mark W (Bowman, Tami A)				
	Routing List	Route List			
		Assignee	Phillips, Jose	**Response**	
Subtask#	WRPS-PER-2009-0385.20				
Subject	WRPS-PER-2009-0385; SIG; EPA-01 Perform an end point assessment. 1. Review objective evidence from all corrective actions to ensure completeness a				
Originator	^PER CAs				
	Routing List	Corrective Action			
		Assignee	Milliken, Nancy J	**Response**	
		Assignee	Gregory, Rob	**Response**	
		Assignee	^Independent Assessment Review	**Response**	Withdrawn

-- end of report --

INCOMING CORRESPONDENCE COVERSHEET

CORR-2008-0049

Author	Addressee	Correspondence No.
J. C. Poniatowski/ORP	J. M. Armstead/WRPS	0900518 DOE-ORP: 09-ESQ-082

Subject: CONTRACT NO. DE-AC27-08RV14800 – WASHINGTON RIVER PROTECTION SOLUTIONS LLC (WRPS) RESPONSE TO ABNORMAL EVENTS SURVEILLANCE S-09-ESQ-TANKFARM-003

DISTRIBUTION

Washington River Protection Solutions
WRPS Correspondence Control
JC Allen-Floyd
JM Armstead
F Beranek
HS Berman
MN Brosee ((Assignee))
GJ Johnson
WJ Johnson
MA Lindholm
KJ Rueter
SM Sax
JM Shelt
BR Thomas

Priority:	**URGENT**
Assignee:	M. N. Brosee
Received:	March 11, 2009
Due Date:	3/25/2008 – Respond to the concern and findings as directed by ORP.

WRPS Correspondence Control
For Questions call: 376-0271
Outlook Address: ^WRPS Correspondence Control

U.S. Department of Energy
Office of River Protection
P.O. Box 450, MSIN H6-60
Richland, Washington 99352

MAR 11 2009

09-ESQ-082

0900518

Mr. Mike Armstead
Procurement Contracts Manager
Washington River Protection Solutions LLC
2440 Stevens Center Place
Richland, Washington 99354

Dear Mr. Armstead:

CONTRACT NO. DE-AC27-08RV14800 – WASHINGTON RIVER PROTECTION SOLUTIONS LLC (WRPS) RESPONSE TO ABNORMAL EVENTS SURVEILLANCE S-09-ESQ-TANKFARM-003

This letter forwards the results of a surveillance conducted by the U.S. Department of Energy, Office of River Protection (ORP) from October 1 through December 31, 2008, to evaluate WRPS Response to Abnormal Events. The surveillance team evaluated applicable procedures, examined records, made field observations, and conducted interviews of staff members to determine the adequacy and effectiveness of response to indications of abnormal events since WRPS assumed contractual obligations for operations on October 1, 2008.

The surveillance team found emergency response and conduct of operations deficiencies in which the Base Operations and 222-S Laboratory management team did not implement approved abnormal response procedures and processes following indications of abnormal operating conditions. One concern, six findings, and one observation were noted. The WRPS management team was previously briefed by ORP staff on the concern and findings on January 15, 2009.

Within 14 days of receipt of this letter, WRPS should respond to the concern and findings. The response should include:

- A formal root cause for the concern and the findings;
- The corrective actions that have been taken to control or remove any adverse impact from noncompliant conditions (remedial actions) and the results achieved;
- The corrective actions that will be taken to identify the extent of condition, correct the cause(s), and prevent further concerns and findings; and
- The date when all corrective actions will be completed, verified, and compliance to applicable requirements achieved.

RECEIVED
MAR 11 2009
WRPS
CORRESPONDENCE CONTROL

MAR 1 2 2009

If you have any questions, please contact me, or your staff may contact Kenneth A. Hoar, Director, Verification and Confirmation Division, (509) 376-3567.

Sincerely,

Joseph C. Poniatowski
Contracting Officer

ESQ:JAA

Attachment

cc w/attach:
R. Jansons, PAC
G. M. McCann, PAC
W. Smoot, PAC
Y. Sherman, RL
WRPS Correspondence

Attachment
09-ESQ-082

MAR 1 1 20

S-09-ESQ-TANKFARM-003

Surveillance
of
Washington River Protection Solutions
Response to Abnormal Events

Table of Contents

Executive Summary: iii
Purpose: 1
Scope: 1
Surveillance Process: 1
Summary: 2
Concern, Findings, and Observation: 3
Conclusion: 20

Executive Summary:

This surveillance was performed to review Washington River Protection Solutions LLC (WRPS) responses to indications of abnormal events since assuming responsibility for operation of the Tank Farms and 222-S Labs on October 1, 2008. The surveillance team found emergency response and conduct of operations deficiencies in which the Base Operations and 222-S Laboratory management team did not implement approved abnormal response procedures and processes following indications of abnormal operating conditions.

The U.S. Department of Energy, Office of River Protection (ORP) is primarily concerned the Tank Operations Contract has not implemented a culture where management and supervisory personnel believe observed or reported abnormal indications, and provide protection to their workers and to equipment until the indications are either validated or proven wrong. Several instances were noted where Operations Managers and supervisory personnel believed informal actions were appropriate when responding to indications of abnormal operating conditions. In addition, Industrial Hygiene (IH) and Base Operations Radiological Control did not recommend or employ rigorous emergency response processes during these observed events to ensure adequate application of the core functions of integrated safety management.

ORP is also concerned WRPS did not self-identify these deficiencies. Several of the events discussed in this report, including the 222-S contamination spread, the 702-AZ fluid spill, and the tank farm over-pressurization alarms had "fact-finding" meetings, but did not recognize the issues identified by ORP in this surveillance. No fact finding was held for 204-AR failure to post and subsequent potential personnel exposure.

The surveillance resulted in one concern and six findings, listed below:

- **Concern S-09-ESQ-TANKFARM-003-C01** - Weakness in Emergency Response Program implementation is indicated based on several instances in which WRPS Base Operations and 222-S Laboratory management team did not implement approved abnormal response procedures following indications of abnormal operating conditions;

- **Finding S-09-ESQ-TANKFARM-003-F01** - Alarm Response procedures for Tank High Pressure alarm were not utilized for AW Tank Farm high pressure alarms as required;

- **Finding S-09-ESQ-TANKFARM-003-F02** – Abnormal Operating Procedure immediate actions were not taken for elevated airborne radioactivity levels identified during decontamination activities at the 204-AR decontamination facility;

- **Finding S-09-ESQ-TANKFARM-003-F03** – Immediate and follow-up actions contained in ERP-222S-009, "Spill/Release/Continuous Air Monitor Alarm," were not initiated or completed for a spill of radioactive material at 222-S laboratories;

- **Finding S-09-ESQ-TANKFARM-003-F04** – General Radiological Work Permits are inappropriately utilized for emergency response activities;

- **Finding S-09-ESQ-TANKFARM-003-F05** - Conduct of Operations, Radiological Control and IH controls implemented during initial event response, and subsequent planned response actions for the 702-AZ spill were not adequate to prevent additional personnel exposures to tank vapors and tank ventilation condensate; and

- **Finding S-09-ESQ-TANKFARM-003-F06** – IH Technicians have not been trained on response actions for tank over-pressure alarms.

Purpose:

The purpose of this surveillance was to review Washington River Protection Solutions LLC (WRPS) responses to indications of abnormal events since assuming responsibility for operation of the Tank Farms and 222-S Labs on October 1, 2008.

Scope:

The scope of the surveillance consisted of reviewing instances of WRPS management, supervisory and employee responses to abnormal indications. Included in this surveillance are the following instances:

- Indications of a loss of ventilation at AW Tank Farm on October 15, 2008;
- Indications of a loss of ventilation at AN Tank Farm on October 15, 2008;
- Indications of airborne radioactivity exceeding requirements for posting the area as an Airborne Radioactivity Area (188 DAC alpha) at 204-AR on November 17, 2008;
- Indications of a spread of radioactive material at 222-S Laboratories on November 21, 2008; and
- Indications of a liquid spill at 702-AZ on December 17, 2008.

Also included in the scope of the surveillance are reviews of response procedures, the WRPS drill and exercise program, and employee training for emergency response actions.

Surveillance Process:

Jason A. Armstrong, U.S. Department of Energy (DOE), Office of River Protection (ORP) conducted the surveillance as the Team Lead, with support from Rich L. Urie, DOE ORP and Rick S. Jansons, Project Assistance Corporation for DOE ORP. The surveillance was conducted in accordance with ESQ-OA-IP-01, "Integrated Assessment Program," Revision 1.

The review process included:

- Review of documents associated with the instances of indications of abnormal conditions;

- Attending WRPS fact-finding meetings, if any, associated with the instances of indications of abnormal conditions;

- Review of procedures and training materials related to employee response to indications of abnormal conditions;

- Interviews of WRPS management, supervisors, and employees; and

- Observation and walkdown of facilities, including 204-AR and 222-S Laboratory during response actions.

In addition, upon identification of a possible management concern, the team briefed the Tank Farms (TF) Operations Division Director and Assistant Manager TF. They, along with ORP Office of Environmental Safety and Quality (ESQ) management, agreed the findings indicated development of a management concern. The WRPS management team was subsequently briefed on the concern and findings on January 15, 2009.

Summary:

The surveillance team found emergency response and conduct of operations deficiencies in which the Base Operations and 222-S Laboratory management team did not implement approved abnormal response procedures and processes following indications of abnormal operating conditions. In some instances Operations Managers and supervisory personnel continued to believe informal actions were appropriate when responding to indications of abnormal operating conditions. In addition, support organizations such as Industrial Hygiene (IH) and Base Operations Radiological Control did not recommend or employ rigorous emergency response processes during these observed events to ensure adequate application of the core functions of integrated safety management.

ORP is primarily concerned the Tank Operations Contract (TOC) has not implemented a culture where management and supervisory personnel believe observed or reported abnormal indications, and provide protection to their workers and to equipment until the indications are either validated or proven wrong.

ORP is also concerned WRPS did not self-identify these deficiencies. Several of the events discussed in this report, including the 222-S contamination spread, the 702-AZ fluid spill, and the tank farm over-pressurization alarms had "fact-finding" meetings, but did not recognize the issues identified by ORP in this surveillance. No fact finding was held for 204-AR failure to post and subsequent potential personnel exposure.

It is important to note the activities in progress when the abnormal events occurred were medium or low risk routine activities. ORP did not identify any instances of improper event response for high radiological risk work activities. This may indicate complacency on the part of Base Operations Shift Management and Base Operations Radiological Control Management for the more routine, lower hazard work primarily conducted in their organization.

Concern, Findings, and Observation:

Concern S-09-ESQ-TANKFARM-003-C-01 - Weakness in Emergency Response Program implementation is indicated based on several instances in which WRPS Base Operations and 222-S Laboratory management team did not implement approved abnormal response procedures following indications of abnormal operating conditions.

Criteria:

The TOC demonstrates sufficient knowledge and procedures to properly respond to abnormal operating conditions.

Requirements:

- DOE O 151.1C, "Comprehensive Emergency Management System," Chapter I, 10, a, b, d, f, and g:

  "a. Develop, implement, maintain, and update, as necessary, an emergency management program, commensurate with the facility-specific hazards and consistent with Departmental directives and standards of performance.

  b. Prepare and maintain emergency plans, procedures, and technical resource capabilities that address emergency classification, notification, reporting, response actions, training and drills, exercises, emergency public information, outreach and coordination, accident investigation, and applicable Federal statutes, State and local laws, DOE Orders, and implementing regulations and guidance.

  d. Direct and/or support appropriate emergency response actions within the area under their control and at the scene of the emergency.

  f. Ensure the effectiveness of a continuing emergency preparedness program.

  g. Establish and maintain an internal assessment program to ensure the readiness of emergency response capabilities, including developing and conducting a self-assessment program, as well as establishing systems and measures to monitor and evaluate line performance."

Discussion:

Recent events (since October 1, 2008) at 222-S Laboratories, Building 204-AR, 702-AZ and several tank farms demonstrate emergency response and conduct of operations deficiencies in which the Base Operations and 222-S Laboratory management team did not implement approved abnormal response procedures and processes following indications of abnormal operating conditions. Based on ORP's surveillance, in these instances Operations Managers and supervisory personnel continued to believe informal actions were appropriate when responding to indications of abnormal operating conditions. In addition, support organizations such as IH and Base Operations Radiological Control did not recommend or employ rigorous emergency response processes during these observed events to ensure adequate application of the core functions of integrated safety management.

This approach by Operations management and their support organizations has resulted in incomplete hazard analysis, lack of required work reviews, deficient controls, and unnecessary worker exposure to potential radiological and chemical hazards when responding to the observed abnormal events.

ORP is primarily concerned the TOC has not implemented a culture where management and supervisory personnel believe observed or reported abnormal indications, and provide protection to their workers and to equipment until the indications are either validated or proven wrong. ORP is also concerned TOC employees do not have adequate knowledge, skills, abilities and attitudes to prevent recurrence of deficient response actions similar to previous tank farm events.

As identified in the findings referenced below and discussed in the report, required tank farm procedures and protocols were not utilized, including alarm and abnormal operating procedures, appropriate radiological work permits, recovery plans, and technical work documents for investigative surveys. Approved processes were not used to ensure employee and public safety and to prevent further potential unplanned employee exposures to tank vapors, tank waste, or other unsafe conditions.

Specific findings include:

- S-09-ESQ-TANKFARM-003-F01 – Alarm Response procedures for Tank High Pressure alarm were not utilized for AW Tank Farm high pressure alarms as required.

- S-09-ESQ-TANKFARM-003-F02 – Abnormal Operating Procedure immediate actions were not taken for elevated airborne radioactivity levels identified during decontamination activities at the 204-AR decontamination facility.

- S-09-ESQ-TANKFARM-003-F03 – Immediate and follow-up actions contained in ERP-222S-009, "Spill/Release/Continuous Air Monitor Alarm," were not initiated or completed for a spill of radioactive material at 222-S laboratories.

- As Low As Reasonably Achievable (ALARA) work planning documents for characterization and decontamination of an unanticipated spread of radioactive loose surface contamination within the laboratory did not address the potential for airborne contamination as required.

- Initial radiological investigative surveys of the 222-S Laboratory spill area were performed without a recovery plan or other technical work document and without appropriate approvals.

- The Job-Specific Radiological Work Permit governing 222-S Laboratory decontamination activities failed to include an anti-contamination hood as required.

- S-09-ESQ-TANKFARM-003-F04 – General Radiological Work Permits are inappropriately utilized for emergency response activities.

- S-09-ESQ-TANKFARM-003-F05 - Conduct of Operations, Radiological Control and IH controls implemented during initial event response, and subsequent planned response actions for the 702-AZ spill were inadequate to prevent additional personnel exposures to tank vapors and tank ventilation condensate.

- S-09-ESQ-TANKFARM-003-F06 – IH Technicians (IHT) have not been trained on response actions for tank over-pressure alarms.

ORP is concerned WRPS did not self-identify these deficiencies. Several of the events discussed in this report, including the 222-S contamination spread, the 702-AZ fluid spill, and the tank farm over-pressurization alarms had "fact-finding" meetings, but did not recognize the issues identified by ORP in this surveillance. No fact finding was held for 204-AR failure to post and subsequent potential personnel exposure.

Acceptable performance will be evident when the TOC institutes and demonstrates a management culture of believing observed or reported abnormal indications, utilizing and following Emergency Preparedness (EP) procedures, and providing protection to their workers and to equipment until the indications are either validated or proven wrong. Performance and processes will be critically examined to identify and correct problems to prevent recurrence. Personnel will be fully trained on expected immediate and follow-up actions, and sufficient EP drills will be conducted to further train, reinforce, and ensure understanding by personnel. These actions are vital to ensure a robust Integrated Safety Management System (ISMS) and Voluntary Protection Program (VPP) system.

The activities in progress when the abnormal events discussed above occurred were medium or low risk routine activities. The fact that operations management did not correctly respond to abnormal events indicates that pre-job planning and crew briefings were not adequate in anticipating potential abnormal events for the activity.

Finding S-09-ESQ-TANKFARM-003-F01 - Alarm Response procedures for Tank High Pressure alarm were not utilized for AW Tank Farm high pressure alarms as required.

Requirements:

- ARP-T-231-AUX, "Respond to Panel ANN-AUX Alarms at 271-AW," Rev/Mod E-7, Page 8, Fan Failure A & B Train Primary Exhauster, Step 4:
  - "INSPECT strip chart recorders AW271-WST-PR-111 through PR-116, located on alarm panel just below alarm windows in 271-AW to verify tank pressures are approximately 0 inches WG. This would indicate there is no ventilation on AW tanks."
- ARP-T-231-AUX, "Respond to Panel ANN-AUX Alarms at 271-AW," Rev/Mod E-7, Page 8, Fan Failure A & B Train Primary Exhauster, Step 8:
  - "IF HI RAD ALARM PRIMARY EXH STACK 'did not' annunciate, and if all tank vacuums have remained (and are presently) less than +0.2 inches WG, REQUEST permission from Shift Manager to perform the following;
    - ENTER farm, AND INVESTIGATE cause of shutdown.
    - ATTEMPT to RESTART primary ventilation system per TO-060-104."
- ARP-T-231-AUX, "Respond to Panel ANN-AUX Alarms at 271-AW," Rev/Mod E-7, Page 8, Fan Failure A & B Train Primary Exhauster, Step 10:
  - "If any tank pressures have exceeded or presently exceed +0.2 psig, RESPOND per appropriate alarm response procedure for High Pressure alarm (panels ANN-101 through ANN-106, Alarm 02, HI PRESSURE TANK 10X (LOW VACUUM), (WST-PAH-11X))."
- ARP-T-231-00106, "Respond to Panel ANN-106 Alarms at 271-AW," Rev/Mod F-0, Page 5, Note:
  - "When the exhaust system is shut down, it is expected that tank pressure will go to zero. Pressure fluctuations of greater than plus or minus 0.2 inches WH indicate unstable conditions."

    "The following readings (from Steps [4] and [5], taken from the 241-AW-271 building and Tank Monitoring and Control System (TMACS), are used in Step [8] to determine if tank conditions are unstable (i.e., symptoms of a tank pressurization and/or gas release event)."

- ARP-T-231-00106, "Respond to Panel ANN-106 Alarms at 271-AW," Rev/Mod F-0, Page 5, Immediate Action Step 4:
  - "CHECK pressure strip chart recorders for each tank, AW271-WST-PR-1111 through AW271-WST-PR-116, located on alarm panel just below alarm windows (red colored traces) to see if tank pressures have exceeded +0.2 inches WG or if there are fluctuations greater than plus or minus 0.2 inches WG."
- ARP-T-231-00106, "Respond to Panel ANN-106 Alarms at 271-AW," Rev/Mod F-0, Page 5, Immediate Action Step 7:
  - "NOTIFY Shift Manager of conductions AND REQUEST the following: Health Physics/Industrial Hygiene support."
- ARP-T-231-00106, "Respond to Panel ANN-106 Alarms at 271-AW," Rev/Mod F-0, Page 5, Immediate Action Step 8:
  - "IF the tank parameters indicate unstable conditions (meets the criteria listed above), Health Physics Technician (HPT), Industrial Hygiene Technician and Operator DON appropriate personal protective equipment (self contained breathing apparatus (SCBA) and one set of protective clothing)."
- ARP-T-231-00106, "Respond to Panel ANN-106 Alarms at 271-AW," Rev/Mod F-0, Page 5, Immediate Action Step 13:
  - "Health Physics Technician and Industrial Hygiene Technician PERFORM assessments for radioactivity, ammonia and organics in the farm."

Discussion:

Based on review of operating logs, pressure recorder charts, and discussion with shift management personnel, ORP determined that ventilation was lost at AW Farm on October 15, 2008. During the ventilation loss event, at least three tank pressures were positive for approximately an hour, with Tank 106 indicating +0.5 inches WG for that period. Although tank pressures exceeded +0.2 inches WG, immediate actions to address the abnormal condition were not conducted in accordance with the appropriate alarm response procedure for High Pressure alarm as required by ARP-T-231-AUX, "Respond to Panel ANN-AUX Alarms at 271-AW," Rev/Mod E-7, Page 8, Fan Failure A & B Train Primary Exhauster, Step 10.

Instead of responding per the alarm response procedure, the shift manager directed a Nuclear Chemical Operator (NCO) and an IHT to perform a sweep of the farm in the late afternoon of October 15, 2008. The NCO and IHT wore Self Contained Breathing Apparatus (SCBA), but did not wear anti-contamination clothing. The ventilation was restarted, and the farm was returned to normal operations. Contrary to the procedure

requirements, a sweep of the farm by a Radiological Control Technician (RCT) was not conducted prior to restoring normal access to the farm.

Subsequent to these events, an RCT was assigned by the shift manager to perform a sweep of the farm on October 16, 2008. The sweep was conducted during the afternoon of October 16, 2008, without respiratory protection or anti-contamination clothing.

Finding S-09-ESQ-TANKFARM-003-F02 – Abnormal Operating Procedure immediate actions were not taken for elevated airborne radioactivity levels identified during decontamination activities at the 204-AR decontamination facility.

Requirements:

- TF-AOP-003,"Response to Elevated Airborne Radioactivity," Revision B-8, Step 2.2 states:

  "Report that a building or breathing air CAM, portable air sampler, or grab air sample is indicating or trending above normal or exceeds established limits or alarm set points."

- TF-AOP-003, "Response to Elevated Airborne Radioactivity," Revision B-8, Step 3.2.3 requires the following Immediate Actions if a portable air sample, or grab air sample exceeds established limits:

  1. IMMEDIATELY stop work and evacuate personnel from the area.

  2. ENSURE area has been isolated or a boundary established to minimize exposure. Items to consider include, but are not limited to the following: all accesses are posted as an airborne radioactivity area as applicable.

  3. NOTIFY Radiological Control to perform the following as necessary: perform whole body surveys and nasal/mouth smears as appropriate for exposed personnel.

  4. CONTACT RCT to enter area with appropriate Personal Protective Equipment (PPE) and check for source of contamination.

Discussion:

On November 17, 2008, WRPS work crews in 204-AR were performing decontamination activities on a camera used for in-tank viewing. The camera was enclosed in a glove bag, and a breathing air sample to validate the integrity of the containment was taken. A field count of the air sample on November 17, 2008, at the work site found indications of airborne radioactivity exceeding requirements for posting the area as an Airborne Radioactivity Area (188 DAC alpha). This information was conveyed to the Radiological Control First Line Supervisor.

Contrary to the requirements of procedure TF-AOP-003, "Response to Elevated Airborne Radioactivity," review of logbooks and interviews with Radiological Control and Operations personnel found no immediate actions were performed, including:

- the area was not posted as an Airborne Radioactivity Area or controlled;
- nasal/mouth smears were not performed; and
- no entry was made to check for the source of contamination.

On November 18, 2008, a WRPS RCT was assigned to perform daily required surveillances without respiratory protection in the work area that should have been posted and controlled as an Airborne Radioactivity Area. After completing her surveillance, she was informed of the air sample results from the previous day. She requested and received in vitro analysis and a whole body count. The area was subsequently posted as an Airborne Radioactivity Area. However, during a walk down of the facility on November 19, 2008, ORP ESQ personnel found one access, the garage door into the work area, was still not posted as an ARA as required.

Subsequent discussion with WRPS Radiological Control personnel found the supervisor assumed the cause to be radon progeny and did not take into account additional source term present in the 204-AR facility upon finding indications of airborne radioactivity on a grab air sample. No decay counts were performed in the first 19 hours to validate the supervisor's assumption.

Back up air samples to discriminate the radon using a Staplex sampler with Annular Kinetic Impactor head were not taken, nor was the original sample taken to the counting laboratory for immediate isotopic analysis. Both of these actions would have helped the supervisor make an educated decision to down post the area if it had been correctly posted in accordance with TF-AOP-003.

Finding S-09-ESQ-TANKFARM-003-F03 – Immediate and follow-up actions contained in ERP-222S-009, "Spill/Release/Continuous Air Monitor Alarm," were not initiated or completed for a spill of radioactive material at 222-S laboratories.

Requirements:

- ERP-222S-009, "Spill/Release/Continuous Air Monitor Alarm," Rev/Change No. H-0, Section 1.0:

  "A spill or release of hazardous/radiological material occurs, OR contamination spread has been identified during operations, radiological surveillance, continuous air monitor (CAM) alarm, PCM2 alarm, or self-survey."

- ERP-222S-009, "Spill/Release/Continuous Air Monitor Alarm," Rev/Change No. H-0, Section 2.1:

  "STOP work and PLACE the area in a safe configuration."

- ERP-222S-009, "Spill/Release/Continuous Air Monitor Alarm," Rev/Change No. H-0, Section 3.1.15:

  "ENSURE the spill or release is stopped/contained."

- ERP-222S-009, "Spill/Release/Continuous Air Monitor Alarm," Rev/Change No. H-0, Section 3.1.16:

  "DETERMINE the cause or source of the spill."

- TOC-ESHQ-RP_RWP-C-03, "ALARA Work Planning," Revision L-2, Section 4.3.3, Airborne Radioactivity Control Considerations, in part:

  "The following operations have the potential to generate airborne radioactivity when accomplished on surfaces with removable or fixed contamination: decontamination."

- TOC-ESHQ-RP_RWP-C-03, "ALARA Work Planning," Revision L-2, Attachment C, Step 4:

  "Document the method and results of the calculation of potential airborne radioactivity concentration on the ALARA Management Worksheet (AMW) (A-6003-904)."

- TOC-ESHQ-RP_RWP-C-03, "ALARA Work Planning," Revision L-2, Attachment C, Steps 5 and 6:

  "When removable contamination values (representative of work surfaces) are available, estimate the airborne radioactivity concentration with the following equation: $C = R\ S_c\ (4.5E\text{-}07\ uCi/dpm)/C_F$"

- TOC-ESHQ-RP_C-03, "ALARA Work Planning," Revision L-2, Section 4.1:

  "Radiological investigative or characterization surveys, performed exclusively to establish radiological conditions of a work area or location, are not considered "work" requiring a work plan, provided that the following activities are <u>not</u> performed:

  - Changing or manipulating plant-installed systems or component(s), i.e., valve manipulation; manipulating or disassembling equipment; opening or closing a system or component other than hinged access doors/covers; bolting/unbolting, welding, hoisting or rigging; fabrication, removing fasteners; connecting

instrumentation to equipment or components; **decontamination**; shielding radiological sources to reduce dose rates; or excavation.

When the radiological investigative or characterization survey does not require any of the items listed above, it is recommended that the activity be performed using a survey plan, task, or routine, as appropriate, in conjunction with the applicable AMW and Radiological Work Permit based on the criteria established in this procedure. **The appropriate approval process must be applied based on the risk level assigned (e.g., high risk work must be approved via the ALARA joint review group process).**" (Applicable sections bolded for emphasis.)

- TOC-ESHQ-RP_RWP-C-04, "Radiological Work Permits," Revision D-18, Attachment A states, in part,

  "For work performed inside of buildings, PPE hoods should be required when performing work with potential for overhead contamination."

Discussion:

At approximately 1500 hours on November 21, 2008, a Chemical Technician Manager was found with approximately 8,000 to 10,000 dpm/100 cm^2 beta-gamma and less than detectable alpha loose contamination on his anti-contamination shoe covers while exiting the posted Contamination Area at 222-S Laboratory. A responding RCT found approximately 8,000 to 10,000 dpm/100 cm^2 beta-gamma and less than detectable alpha loose contamination on the floor in the area where the Chemical Technician Manager had traversed. These work areas, although posted as Contamination Areas, are normally maintained free of loose contamination

Facility management allowed routine surveillances using General Radiological Work Permits to continue over the weekend (November 21 through 23, 2008). Personnel conducting routine surveillances used a "smear and clear" method of entry into the contaminated area. Contamination levels of 8,000 to 10,000 dpm/100 cm^2 beta-gamma and less than detectable alpha loose contamination were found throughout the facility, including lab rooms and hallways normally maintained free of loose contamination. On Saturday, November 22, 2008, 150,000 dpm loose beta-gamma contamination was found on computer labels on a cart in Room 2B. Workers and Radiological Control supervision did not consider the General Radiological Work Permits to be voided, because the levels of contamination exceeding the 20,000 dpm/100 cm^2 void limit found to date were not "general area" and were only present in specific locations in Room 2B.

On Sunday, November 23, 2008, personnel were called out on overtime to survey and decontaminate additional portions of the lab. In general, reported contamination levels remained at approximately 8,000 to 10,000 dpm/100 cm^2 beta-gamma and less than detectable alpha loose contamination throughout the facility. However, upon entering

Room 2B, the workers found 50k dpm/LAW in the middle of the room in 2B2, and 25K dpm/100 cm^2 on the floor around hood 2.

Contrary to the 222-S Laboratory spill response procedure, after a contamination spread was identified, work (routine surveillances) was allowed to continue over the weekend (November 21 through 23, 2008) without stopping the spill or determining the cause or source of the spill. (Note: the source or cause has not yet been determined.) Not until November 25, 2008, was a Recovery Plan developed and implemented. In addition to the failure to take immediate actions, the following deficiencies were identified with respect to the spill recovery:

1. **ALARA work planning documents for characterization and decontamination of an unanticipated spread of radioactive loose surface contamination within the laboratory did not address the potential for airborne contamination as required.**

   Procedure TOC-ESHQ-RP_RWP-C-03, "ALARA Work Planning," Revision L-2, Section 4.3.3, Airborne Radioactivity Control Considerations, states, in part, "The following operations have the potential to generate airborne radioactivity when accomplished on surfaces with removable or fixed contamination: decontamination." In this case, a review of the AMW AW-1514-S, and Recovery Plan RP 2008-05, used for investigative surveys and spill response at 222-S Labs, found no methods of determining the amount of potential airborne radioactivity were used in planning the work, resulting in incorrect decisions to take no air samples or prescribe the use of respiratory protection for workers performing decontamination activities.

   Contrary to Step 4 of Attachment C, the method and results of the calculation of the potential airborne radioactivity concentration were not documented on the ALARA Management Worksheet. Instead, Part III.A of the AMW, "Method of Determining Airborne," only states, "Contamination levels and work activity should not cause an airborne problem."

   Additionally, no discussion or explanation was provided in the AMW identifying this as an investigative survey of a spill with an unknown source of contamination and unknown levels of contamination. The AMW, Part IV, Data Reliability, did not identify the unknown contamination levels. Instead, the AMW stated reliable radiological survey data was available for planning purposes and referenced Survey Report S259667, with a maximum identified contamination level of 50,000 dpm/LAW beta-gamma removable. Other Survey Reports were available to the planners, including S259670 with contamination levels up to 100,000 dpm/LAW beta-gamma removable. Neither of the survey reports quantified the contamination levels in units of dpm/100 cm^2. There was no recognition in the AMW that the contamination levels and airborne hazards were not fully known.

2. **Initial radiological investigative surveys of the 222-S Laboratory spill area were performed without a recovery plan or other technical work document and without appropriate approvals.**

   Contrary to the requirements of TOC-ESHQ-RP_C-03, "ALARA Work Planning," Revision L-2, Section 4.1, radiological investigative survey activities and associated decontamination were conducted at 222-S Laboratories from November 21 through November 25, 2008, without generating a recovery plan or other technical work document, assigning a risk level or receiving the appropriate management approvals. This approach resulted in incomplete hazard analysis, lack of required work reviews, and potentially deficient controls.

3. **The Job-Specific Radiological Work Permit governing 222-S Laboratory decontamination activities failed to include an anti-contamination hood as required.**

   Observation of decontamination activities in Room 2B, interviews with RCTs and RCT Supervisors, and review of survey documentation found surveys and decontamination activities were planned and conducted above the heads of workers. Contrary to the requirements of TOC-ESHQ-RP_RWP-C-04, "Radiological Work Permits," Attachment A, a review of Job-Specific Radiological Work Permit S-715, Revision 0, found anti-contamination hoods were not specified to be worn by workers performing decontamination activities. A review of the associated AMW (AW-1514-S) and Recovery Plan (RP 2008-005) found no limitations or exclusions on performing overhead work.

Finding S-09-ESQ-TANKFARM-003-F04 – General Radiological Work Permits are inappropriately utilized for emergency response activities.

Requirements:

- The Tank Farm Radiological Control Manual, HNF-5183, Article 322.2 and 322.3 state, in part:

  "Job-Specific RWPs should be used to control non-routine operations or work in areas with changing radiological conditions.

  General RWPs may be used to control routine or repetitive activities, such as tours and inspections or minor work activities, in areas with well characterized and stable radiological conditions."

Discussion:

The Tank Farm Radiological Control Manual requires job-specific Radiological Work Permits (RWP) be used to control non-routine operations or work in areas with changing radiological conditions. General RWPs may only be used to control routine or repetitive activities, such as tours and inspections or minor work activities, in areas with well

characterized and stable radiological conditions. Contrary to these requirements, several instances were noted where General RWPs were used to control non-routine operations.

1. Loss of ventilation with high tank pressure alarms occurred at AN Farm on October 15, 2008, and at AW Farm on October 15, 2008. In both cases, the responding personnel utilized RWP TF-001, Revision 44, which is a General RWP limited to work under known, stable radiological conditions.

2. A contamination spread occurred at 222-S Laboratories on November 21, 2008. Investigative surveys to determine the levels, extent, and source of the contamination spread were conducted from November 21 through November 24, 2008, using General RWPs S-521, Revision 012, and S-602, Revision 012. General RWP S-521 does not authorize contamination surveys or decontamination activities, but only allows routine surveillance work and other routine activities.

The purpose of the RCT's response in each of these three events is to survey for changing radiological conditions. By definition, these activities cannot be controlled by a General RWP. In addition, as noted in Finding S-09-ESQ-TANKFARM-003-F03, the work was conducted without generating a recovery plan or other technical work document.

Finding S-09-ESQ-TANKFARM-003-F05 - Conduct of Operations, Radiological Control and IH controls implemented during initial event response, and subsequent planned response actions for the 702-AZ spill were not adequate to prevent additional personnel exposures to tank vapors and tank ventilation condensate.

Requirements:

- 29 CFR 1910.120(f)2(ii):

  "For employees covered under paragraph (f)(2)(iii) and for all employees including of employers covered by paragraph (a)(1)(iv) who may have been injured, received a health impairment, developed signs or symptoms which may have resulted from exposure to hazardous substances resulting from an emergency incident, or exposed during an emergency incident to hazardous substances at concentrations above the permissible exposure limits or the published exposure levels without the necessary personal protective equipment being used:

  Content of medical examinations and consultations: 1910.120(f)(4)(i): Medical examinations required by paragraph (f)(3) of this section shall include a medical and work history (or updated history if one is in the employee's file) with special emphasis on symptoms related to the handling of hazardous substances and health hazards..."

- 29 CFR 1910.120(p)(8)(ii) and (iii), in part:

  "Elements of an emergency response plan. The employer shall develop an emergency response plan for emergencies which shall address, as a minimum, the following areas to the extent that they are not addressed in any specific program required in this paragraph:

  - Emergency recognition and prevention.
  - Decontamination procedures.
  - Emergency medical treatment and first aid.
  - Emergency alerting and response procedures.
  - Critique of response and follow-up.
  - PPE and emergency equipment.

  Training for emergency response employees shall be completed before they are called upon to perform in real emergencies. Such training shall include the elements of the emergency response plan, standard operating procedures the employer has established for the job, the personal protective equipment to be worn and procedures for handling emergency incidents."

- 29 CFR 1910.132 (d), in part:

  "The employer shall assess the workplace to determine if hazards are present, or are likely to be present, which necessitate the use of personal protective equipment (PPE). If such hazards are present, or likely to be present, the employer shall:

  - Select, and have each affected employee use, the types of PPE that will protect the affected employee from the hazards identified in the hazard assessment;
  - Communicate selection decisions to each affected employee; and,
  - Select PPE that properly fits each affected employee.

  The employer shall verify that the required workplace hazard assessment has been performed through a written certification that identifies the workplace evaluated; the person certifying that the evaluation has been performed; the date(s) of the hazard assessment; and, which identifies the document as a certification of hazard assessment."

- RPP-34147, "Tank Waste Dermal Exposure Assessment," Revision 0. The report calls for personal protective equipment for operations on tank ventilation systems, and spells out those chemicals of concern in condensate.

- RPP-27195 "Personal Protective Equipment," Revision B-12 (4.1) states "Protection is required where there is a potential for hand injury due to exposure to such hazards as: skin absorption of harmful substances..."

- TFC-ESHQ-IH-STD-10 "Industrial Hygiene Response to Employee Contact with Chemical Waste," states, "All hazard and facility/area information will be provided to the Occupational Medicine Contractor and the shift manager."

- TF-AOP-011, "Response to Chemical and/or Radiological Events," Rev/Mod C-2.

Discussion:

On December 17, 2008, a qualified Field Work Supervisor (FWS) and supporting crew were assigned to perform the air flow testing of tank exhaust on the downstream side of the A and B train HEPA filters. Four members of the work crew (IHT, RCT and two V&B personnel) were stationed in the CAM room to actually perform the test, and the remaining two personnel (NCO and FWS) were stationed to guard the two doors into the CAM room during testing. The work crew in the room donned SCBA and performed a portion of the work without incident. Upon removal of a lower testing port cover, approximately 1 quart of fluid spilled from the port "like a faucet" according to the V&B personnel. The cap was replaced.

The IHT was monitoring for Volatile Organic Compounds (VOC) and ammonia, with area results reported below detection limits. It is noteworthy that the work instruction, #111243, also identified action levels for formaldehyde, which was not addressed in the air monitoring regime. ORP has since confirmed that formaldehyde was not a Chemicals of Potential Concern (COPC) for this task, but mistakenly listed. The RCT surveyed the glove of the V&B person and the spill area and found no contamination. The work crew removed their SCBAs and called in the two team members guarding the doors. The FWS determined the fluid to be a spill, and notified Base Operations Shift Manager (BOSM) at 1350.

The BOSM entered TF-AOP-011, "Response to Chemical and/or Radiological Events," Rev/Mod C-2. At 1400, the BOSM logged a call to 911, and requested no response. At 1405, the six team members at the spill site were sent to AdvanceMed Hanford (AMH) for medical evaluation. The NCO and Operations Engineer at the scene controlled access to the spill area. At 1415, the doors to the spill area were posted, "No entry without shift manager's authorization." No specific contaminate information was provided to AMH in conjunction with the reporting individuals.

Subsequently, the BOSM directed a team to re-enter the spill area to monitor the air for VOC and ammonia, take an air sample in a Tedlar bag, take a fluid sample for chemical analysis, and perform radiological surveys. The re-entry team was not directed to (and did not) wear any anti-contamination clothing or utilize respiratory protection. The two RCTs assigned to the re-entry team reported a "funny, wet metal" smell in the outer room and the RCTs immediately exited the building. The IHT entered the inner room (spill area) for approximately two additional minutes to collect the tedlar air sample. The fluid sample and radiological surveys were not performed. The spilled fluid has reportedly since evaporated.

Approximately 24 hours after the spill occurred, a fact finding was held by WRPS. Neither a fluid sample nor radiological surveys of the spill area had been performed at the time of the fact-finding. Improper response issues identified by ORP but not determined by the WRPS fact-finding include:

1. Contrary to Radiological Worker II training, workers did not perform SWIMS immediate actions, but instead removed their respiratory protection in the spill and called two individuals who were outside the spill area into the room rather than minimizing their exposure by exiting the room.

2. An Incident Command Post was not established, and a formal process or plan was not initiated to ensure personnel responding to the spill were adequately protected. Two responding RCTs who were not required to wear respiratory protection reported symptoms and were sent to AMH for evaluation.

3. The decision to send the responders into the spill area without PPE was made with the assumption that the spill conditions were known even though a condensate sample and radiological surveys had not been performed. The lack of specific knowledge should have resulted in conservatively approaching the spill and treating the fluid as an unknown. Interviews with the two responding RCTs found they were not informed of odors in the room.

4. The BOSM concluded that the conditions for exiting TF-AOP-011 were to identify and control the area. The procedure states the termination/exit criteria to be: "Radiological and/or chemical event has been stabilized, hazards fully identified and controlled, and all affected personnel notified." The BOSM, in interviews with the ORP personnel indicated that the phrase did not require him to characterize the spill or know any of the spill constituents, but only to "identify" a spill. This is an erroneous, non-conservative interpretation of the procedure requirements. Such an assumption fails the intent of performance in the execution of 29 CFR 1910.120(p)(8)(ii) and (iii).

5. The IH involved in planning the re-entry did not address the risk assessment and PPE selection process per 29 CFR 1910.132 (d) and failed to plan for the presence of dermal hazards as identified in RPP-RPT-24794, "Concentrations of Chemicals of Potential Concern in Water and Organic Condensates," Revision 1. This study provides a list of COPC and associated concentrations found in concentrate. It is intended to be utilized in conjunction with RPP-34147, "Tank Waste Dermal Exposure Assessment," Revision 0, and TOC-ESHQ-S_IS-C-02, "Personal Protective Equipment," in the consideration and selection of chemical protective clothing.

6. When workers were transported to AMH for evaluation, the chemicals of concern in the condensate should have been shared with workers in accordance with ISMS principles, and reported to the clinic for the eight employees eventually sent to AMH for evaluation per industry standards and 29 CFR 1910.120(f)(ii). To date, this action has not occurred.

7. The lack of proper response to the spill during the work activity indicates that potential abnormal events and expected actions were not planned for or discussed during pre-job briefings.

In addition, the following response and IH programmatic questions were not addressed during the fact-finding, and although requested by ORP staff, have not been addressed to date:

1. the justification for the choice of limited IH instrumentation data and conclusions drawn;

2. lack of condensate characterization (the product was neither sampled, nor was the condensate characterization report consulted);

3. absence of correspondence with AMH regarding possible cutaneous absorbed agents (or lack of);

4. failure to evaluate protective gloves via internal moisture and headspace analysis for semi-volatile compounds that may have permeated (or simple conclusive evidence that no such compounds were present); and

5. what, if any vapor suppressant should be used on tank waste spills and the technical rationale for the conclusions.

Finding S-09-ESQ-TANKFARM-003-F06 – IHTs have not been trained on response actions for tank over-pressure alarms.

Requirements:

- DOE Order 5480.20A, Chapter IV, 4.a.(2)(a) states:

  "The Training Program shall include the following: On-the-job and classroom-type training to ensure that personnel are familiar with all aspects of their positions. Such training shall include but not be limited to:
  (a) Normal and emergency procedures."

Discussion:

A review of procedure TOC-BSM-TQ-STD-07, IHT Training and Qualification Requirements, Revision C, found no requirement to conduct training on emergency procedures or IHT response actions to abnormal events. In addition, a review of the Qualification Card for TOC IHT, Course 350292, Revision 0608.1, found no training on abnormal or emergency procedures or response actions.

Course 35E001, TOC Emergency Response Organization Facility Specific Initial Training, is provided to IHs and on-shift IHTs. However, a review of the training material associated with this course found comprehensive training of emergency procedures is not conducted, nor is any IH-specific emergency training provided in this course. In addition, this training is not provided to non-shift IHTs. However, these non-shift IHTs are expected to respond to emergencies, and are not precluded from working on-shift for overtime, vacation, or sick-time coverage for the trained on-shift IHTs.

Observation S-09-ESQ-TANKFARM-003-O01 – RCT response to tank over-pressurization is not in accordance with RCT-specific response training.

Discussion:

The On-the Job-Training Card and Guide for Tank Farm Alarm Response, Course 351511, Revision 6 was implemented to prepare RCTs to respond to tank farm overpressure alarms. During several over-pressure events since October 1, 2008, RCT response actions did not comply with training.

The training directs RCTs to:

- ensure that all entrances of the tank farm are secured and locked, or posted "Airborne Radioactivity;"
- don personnel protective equipment (SCBA and one set of protective clothing);
- gather count rate instruments, dose rate instruments, portable air sampler; and
- obtain smear and dose rate surveys of all pits, risers, ventilation ducts, and other fixtures connected to the alarming tank or near the alarming source.

  "[When performing dose rate surveys] pay particular attention to ventilation duct elbows directly above the tank, horizontal runs in the ventilation duct, de-entrainer and filters on the exhaust, and inlet HEPA filter."

Four responses to tank over-pressure alarms were evaluated. The tank over-pressure alarm was received on October 8, 2008, at SY Farm, on October 15, 2008, at AN Farm and AW Farm, and on October 16, 2008, at AY/AZ Farms. Contrary to the training received, the following discrepancies were noted during the RCT response actions:

1. In no case was the farm posted as an "Airborne Radioactivity Area."

2. In no case were both SCBA and one set of protective clothing utilized for the sweep surveys.

3. Reviews of completed Radiological Survey Reports found instances where only contamination surveys and no dose rate surveys were performed. In at least one instance when dose rate surveys were performed (Radiological Survey Report WTO-012177), only general area dose rates were performed, contrary to the training direction to "pay particular attention to ventilation duct elbows directly above the tank, horizontal runs in the ventilation duct, de-entrainer and filters on the exhaust, and inlet HEPA filter."

Conclusion:

The Surveillance Team found emergency response and conduct of operations deficiencies in which the Base Operations and 222-S Laboratory management team did not implement approved abnormal response procedures and processes following indications of abnormal operating conditions. In some instances Operations Managers and supervisory personnel continued to believe informal actions were appropriate when responding to indications of abnormal operating conditions. In addition, support organizations such as IH and Base Operations Radiological Control did not recommend or employ rigorous emergency response processes during these observed events to ensure adequate application of the core functions of integrated safety management.

Acceptable performance will be evident when the TOC institutes and demonstrates a management culture of believing observed or reported abnormal indications, utilizing and following EP procedures, and providing protection to their workers and to equipment until the indications are either validated or proven wrong. Performance and processes will be critically examined to identify and correct problems to prevent recurrence. Personnel will be fully trained on expected immediate and follow-up actions, and sufficient EP drills will be conducted to further train, reinforce, and ensure understanding by personnel. These actions are vital to ensure a robust ISMS and VPP system.

WRPS ~~CH2M HILL~~ 5/27/09

ATTENDANCE ROSTER

Subject:	Date: 05/27/09
SigPER WRPS-2009-0385 Briefing	Leader: Jim Crockett

NAME (Print)	Signature	Position/Title	Organization
K. Seely		HPT	BOW
D Robillard		HPT	Radcon
M Snyder		HPT	Radcon
Rob Taylor		HPT	Radcon
Rick Mc		HPT	BO
D NOLAND		HPT	HPT
Barry Anderson		HPT	Radcon
B. Livingston		HPT	BO
T Stirton		HPT	BO
M Ward		HPT	B.O.
Sutley		RCT	BO
JE Crockett		RC Supv	B.O.
M L DAVIS		HPT	B.O. REVIEWED ON 06/01

A-6003-211 (11/05)

CH2M HILL
ATTENDANCE ROSTER

Subject:	Date: 06/01/09
SigPER WRPS-2009-0385 Briefing	Leader: Jim Crockett

NAME (Print)	Signature	Position/Title	Organization
LISA MORRIS	[illegible]	HPT	Base ops
R. Theron Gammer	[illegible]	RCT	"
VINCE CHAPMAN	[illegible]	HPT	"

A-6003-211 (11/05)

Ownership matrix

1.0 CHARTER
(5.1.1)

The Conduct of Operations Council (COOC) is the governing body for promoting continuous improvement in Conduct of Operations (Con Ops) for the Tank Operations Contractor (TOC). Goals of the COOC are:

- Promote excellence and continuous improvement in Con Ops (including Radiological Practices).
- Implement process changes that integrate Con Ops, human performance initiative (HPI), and Integrated Environment, Safety and Health Management System (ISMS).
- Provide oversight and direction for company-wide COOP and HPI related activities, guidelines, priorities, monitoring, overall program effectiveness, communication, and lessons learned.

Conduct of Operations requirements apply to essentially all segments of our business activity. Conduct of Operations is the formality with which activities at the TOC are to be conducted to ensure the safety of workers, the public, and the environment. Operations are conducted in a deliberate and disciplined manner within the limits of the safety basis and federal and state regulations. Safe and effective operations are based on interrelated systems, controls, and criteria that provide for "defense-in-depth" in conducting activities safely.

Integrated in this formality of operations is a safety culture promulgated by management and implemented at every level of supervision, operations, and support functions. The safety culture endorsed by Conduct of Operations is integrated into the principles of the ISMS. The TOC ISMS includes one integrated set of safety culture attributes including relevant aspects of Conduct of Operations, Conduct of Radiological practices, HPI, voluntary protection program (VPP), and Safe Work Environment (SWE), which promote a commitment to excellence, not just compliance.

2.0 MEMBERSHIP

Membership is intended to include a mix of workers and management representatives.

1. Council Chairperson –Elected from the Representatives Organizational/Functional Representatives:
   - Base Operations

  - Manager, 222-S Laboratory Facility
  - HAMTC Employee
- SST Retrieval & Closure
  - Manager, C Farm Retrieval & Closure Operations
  - Manager, Technical and Planning Operations
  - Manager, Radiological Control
  - Manager, SST R&C Engineering
  - HAMTC Employee
- Work Force Resources
  - Manager, Training
- Environmental Safety Health & Quality
  - HAMTC Safety Representative
  - Senior Technical Advisor, ISMS/HPI
- Manager, Project Operations (Senior Management Sponsor).

2. ORP Facility Representative (Non-voting, invited participant).

3.0 RESPONSIBILITIES

3.1 Senior Management Sponsor

1. Establish the Council.
2. Provide resources to the council for approved initiatives.
3. Obtain HAMTC endorsement for representative employees for Sub Committee membership.

3.2 Chairperson

1. Preside over the council meetings.
2. Provide leadership and direction.
3. Establish, assign, and track action items.
4. Approve council minutes.

3.3 Organization/Functional Representatives

1. Conduct liaison and coordination for council issues within their organizations.
2. Provide an administrative support person
3. Review meeting material.
4. Support council activities on as as-needed basis.
5. Lead sub committees on specific council approved initiatives.

4.0 COUNCIL OPERATION

3. The council will keep minutes of discussion topics, issues and concerns, and progress and resolutions of action items. Minutes of the previous meeting should be distributed before the next meeting for review and approval at the next scheduled meeting.

4. A council membership roster will be maintained to document work group representation. Primary members shall identify a designated alternate to assume council duties in the primary member's absence.

5. Establish DOE Order 5480.19 Chapter Champions from within the TOC to be the subject matter expert for the given topics.

6. The council will review status of all DOE Order 5480.19 Chapters at least once every 24 months.

5.0 SOURCES

5.1 Requirements

1. Management Directed Best Management Practice.

5.2 References

1. DOE O 5480.19, "Conduct of Operations Requirements for DOE Facilities."

2. INPO Human Performance Fundamentals Course Reference, December 2002, Rev 6.

3. RPP-POL-OPS, "Conduct of Operations Policy."

4. TFC-OPS-OPER-CD-45, "Conduct of Operations Implementation Guide."

5. TFC-PLN-05, "Conduct of Operations Implementation Plan."

October 17, 2008

RIVER PROTECTION PROJECT
BASE OPERATIONS SHIFT INSTRUCTIONS

Reviewed: A_____B_____C_____D_____T_____

PLANNED ACTIVITIES (Notify Shift Operations Manager of any activities that cannot be completed)

Shift Operations

- Initiated 241-AP Fire Watch 10/15/08 @ 1800 Continue (2 hr frequency).
- Monitor the building temperature in the hot side of 242-S as specified below:
  If OUTSIDE temperature falls below 40 degrees, initiate a building temperature watch to be performed every 4-hours.
  If INSIDE temperature in the process cells drops below 40 degrees, initiate a 2-hour building temperature watch.
  If INSIDE temperature in the process cells drops below 32 degrees, the Hanford Fire Department is to be notified, and they will drain the system as a last resort to prevent it from freezing. If the system has to be drained, the 2-hour temperature watch will become a **1-hour fire watch**.

Double Shell Tanks

- 241-AP Annulus Conductivity Probe Leak Detector Check's - Sat/Sun days

Single Shell Tanks

- There will no longer be a Car 46 on the weekends. Therefore the survey instruments will not be checked daily. SST operators will need to check out the required survey instruments or call Car ll for a checkout. Sunday nightshift, Shift HPTs will perform the instrument checks so they are ready for Monday days.

ACTIONS (Senior Shift Manager's initial on Action Items indicates completion for assigned personnel)

1. Review the Alarm Response Procedures (ARPs) associated with a loss of primary ventilation in each tank farm. Remember, there may be several alarms as a result of a loss of primary ventilation. Ensure all of the required actions for each valid alarm are completed. Additionally, before restoring general access to the affected farm, ensure that the farm has been surveyed/monitored/swept by both an IHT AND an HPT. Brief your shift personnel on these requirements so that they know to review all applicable ARPs on a loss of primary ventilation. SSM initial below when this action has been completed for your shift.
   A_____B_____C_____D_____T_____
2. Review: Tailgate 10/20/2008 with your shift crew.
   A_____B_____C_____D_____T_____
3. Review: Tailgate 10/13/2008 with your shift crew.
   C _____

INFORMATION

1. (09/23/08) Per interoffice memo 71F60-FAS-08-003 the 241-AW, AW Ventilation Tank Primary System has completed all testing requirements and has been approved. The new (W-314) exhauster in AW is

INTEROFFICE MEMORANDUM

washington river protection solutions

WRPS-0800120

Date: November 13, 2008

To: P. L. Owen

From: T. A. Erickson, Security and Emergency Services

Subject: FACT-FINDING REPORT EIR-2008-024, ISSUE WITH LACK OF ACTIONS TO THE ALARM RESPONSE PROCEDURE WHEN THE PRIMARY EXHAUSTER SHUT OFF

Submitted for your information and use is the fact-finding event investigation report EIR-2008-024, *Issue with Lack of Actions to the ARP when the Primary Exhauster Shut Off.* The enclosed report contains the information obtained during the fact-finding but does not necessarily cover exhaustive investigation of all issues.

Resolution of problem evaluation request WRPS-PER-2008-0085 should include consideration of this report in the identification of the cause(s) of the event(s) and the development and implementation of the corrective actions.

Should you have any questions or need additional information regarding this report, please contact me at 373-2458.

TAE:EEW

Enclosure: Fact-Finding Report EIR-2008-024, Issue with Lack of Actions to the ARP when the Primary Exhauster Shut Off (33 pages)

cc:
J. J. Badden
H. S. Berman
M. N. Brosee
F. Beranek
P. T. Day
W. T. Dixon
T. A. Erickson
J. E. Geary
S. D. Hyman
D. H. Irby
R. S. Jansons
M. A. Lindholm
T. R. Reynolds
J. T. Rolph
K. J. Rueter
D. M. Slaugh
E. A. Tackett
D. T. Tuckness
S. M. Sax
D. L. Shugars
S. F. Waters
B. I. Williamson

RECEIVED
NOV 18 2008
WRPS
CORRESPONDENCE CONTROL

FACT-FINDING REPORT

Issue with Lack of Actions to the ARP when the Primary Exhauster Shut Off

Event Investigation Report EIR-2008-024

T. A. Erickson _____ 11-12-2008
Fact-Finding Lead — Date

P. L. Owen _____ 11/13/08
PER Responsible Manager — Date

PER No. WRPS-PER-2008-0085

Issue with Lack of Actions to the ARP when the Primary Exhauster Shut Off

Summary of the Investigation

Following the shutdown of the 241-AW exhauster on October 15, 2008, Problem Evaluation Request (PER) WRPS-2008-0085 (Attachment) was generated on October 16, 2008, by a HAMTC Safety Representative, with the concern that Health Physics Technicians (HPTs) were not dispatched to do a survey as required by the procedure when criteria is met following the shutdown of the primary exhauster.

Based on the PER and five incidents involving the shutdown of tank farm exhausters/ventilation systems occurring over an eight-day period, Base Operations (Base Ops) management conducted a review and fact-finding of these incidents to better understand the precursors leading to the events and potential causes of the varied responses. (The ventilation shutdown times and relevant comments are provided in the following Event Time Line section.)

Review of the five incidents and associated alarm response procedures (ARP) during the fact-finding meeting found inconsistencies in the ARP-directed responses from farm to farm and when the ARPs are applicable.

As a result of the fact-finding meeting, a team was assigned and directed to immediately initiate review of primary ventilation ARPs for consistency in response, evacuation requirements, personnel protective equipment (PPE), and HPT and industrial hygiene (IH) responsibilities in releasing the farms for access following an exhauster shutdown.

Event Time Line(s)

Date: October 8, 2008: SY Tank Farm – maintenance action

Time: 0925

- SY exhauster shuts down as a result of maintenance action
- Industrial hygiene technician (IHT) and nuclear chemical operator (NCO) sent into farm to restart the exhauster.
- Self-contained breathing apparatus (SCBA) used by IHT and NCO; not accompanied by an HPT
- Radiological surveys completed later as part of weekly routines
- Tank farm personnel did not immediately evacuate the farm (ARP does not require)
- Slightly positive tank pressure readings were detected

Note: In regard to the unexpected shutdown of the SY-B exhauster during maintenance, a separate fact-finding report is available. (Report No. EIR-2008-021)

Issue with Lack of Actions to the ARP when the Primary Exhauster Shut Off

Date: October 13, 2008: AP Farm – Entered LCO 3.2.1 for Farm Outage

Time: 1630

- AP exhauster shut down for an electrical outage due to a ground fault alarm on breaker
- This was a scheduled outage and the workers were operating under the guidance of a Work Task package.
- No requirements for IHT support since actions were not driven by an ARP

Date: October 15, 2008: AN Farm – mod bus failure

Time: 1630

- AN exhauster shuts down inadvertently due to a computer communication problem while temporary power was being hooked up for the upcoming farm outage
- HPTs donned SCBA to perform surveys at 2100 hrs; IHT did not accompany the HPTs
- Personnel may be entering farm without "whites" (PPE)

Date: October 15, 2008: AW Farm – HPT CAM filter change-out

Time: 1410

- AW exhauster shuts down during filter paper change-out
- Tank 106 pressure, measured in inches water gauge (wg), increased to 0.5" wg
- AW Farm made a Vapor Control Zone (VCZ) due to exhauster shutdown
- Uncertain if all actions were completed once the tank pressure increase was known
- IHT and NCO in SCBA entered farm to restart the exhauster and perform IHT assessment. IHT survey (VCZ down posting) was completed following the restart of the exhauster. Whites (PPE) not worn for entry.
- No HPT initial survey conducted in response to the ARP. Survey completed the next day by shift HPTs.

Date: October 16, 2008: AY/AZ Farm – low differential pressure (d/p), second stage

Time: 0620

- NCO reports AY/AZ primary ventilation shutdown on low differential pressure alarm across second high efficiency particulate (HEPA) filter bank.
- IHT and HPT completed tank farm surveys.

Issue with Lack of Actions to the ARP when the Primary Exhauster Shut Off

Compensatory Measures

Upon receipt of the PER, an immediate action was taken by Base Operations Shift Operations directing Shift Operations, on loss of primary ventilation, to ensure that all of the required actions for each valid alarm are completed and, before restoring general access to the affected farm, to ensure that the farm has been surveyed/monitored/swept by both an IHT and an HPT. (Attachment)

Potential Causes

The potential causes for the varied response to exhauster shut downs/ventilation failures may be attributed to alarm response procedures:

- ARPs are not consistent from farm to farm
- ARPs are cumbersome and are difficult to follow; not user-friendly
- ARPs not consistent for IH and radiological response actions and the required levels of PPE needed to perform these actions

Extent of Condition Review

- Review team to review all loss of primary ventilation ARPs (attachment)

Attachments

1) Event Investigation Attendance Forms
2) WRPS-PER-2008-0085
3) River Protection Project Base Operations Shift Instructions, October 17, 2008
4) Shift Operations Logbook entries: AN, AW, AY/AZ, SY
5) 241-AW Tank Vacuum charts for 241-AW-103, 104, and 106
6) ARP-T-221-00105, *Alarm Response Procedure*, Rev E-0, pages 4,5,6,7
7) ARP-T-221-00108, *Alarm Response Procedure*, Rev E-1, pages 13,14
8) ARP-T-231-00106, *Alarm Response Procedure*, Rev F-0, pages 4,5,6,7
9) ARP-T-231-AUX, *Alarm Response Procedure*, Rev E-7, pages 8,9,10
10) ARP-T-431-0101, *Alarm Response Procedure*, Rev E-13, pages 5,6,7
11) List of Alarm Response procedures to be reviewed by ARP Corrective Action team

Attachment 1

CH2M HILL
ATTENDANCE ROSTER

Subject: Fact Finding Session
Exhauster Shut-down Responses

Date: 10-27-08

Leader:

NAME (Print)	Signature	Position/Title	Organization
Teodoro P. Morales	Teodoro P. Morales	EP Specialist	Emerg. Prep.
David W. Strasser	[illegible]	SSM	Base Ops shift.
M. N. Brosee	[illegible]	Base Ops Mgr	Base Ops
Leland Coleman	Leland Coleman	Procedure Writer	Procedures
W. M. Harty	[illegible]	Base Ops Sys. Engr	Engr.
R. Jansons	[illegible]	PAC for ORP	ORP RadCon
Dennis Irby	[illegible]	ORP-SSO	ORP-ESD
Brandon Williamson	[illegible]	ORP-FR	DOE
Joe Cato	Joe Cato	C-Retrieval Ops	WRPS
J E Borrowman	J E Borrowman	Field Crew	WRPS
Don M Slough	[illegible]	HAMTC Safety	Base Ops.
Tammy Reynolds	[illegible]	Base Ops	Base Ops
Kim Bouché	Kim Bouché	Base Ops Staff	Base Ops
Marc Jones	[illegible]	IH Program	ESH&Q
Brad Brannan	[illegible]	Base Ops	RadCon
J. J. Badden	[illegible]	STA	BOO

A-6003-211 (11/05)

Save

Problem Evaluation Request (PER)

WRPS-PER-2008-0085
In Process/Work

PER No	Date of Discovery	Time of Discovery (24:00)	Project
WRPS-PER-2008-0085	10/16/2008	08:30	Day Ops-E

Location

AW Farm

How Was Problem Discovered

Alarms

Description of Concern or Problem

HPT lead came to me this morning with a potential stop work issue he had about the lack of actions to the ARP when the primary exhauster shut off. HPTs were not dispatched to do a survey as required by the procedure when criteria is meet. The AW-102 strip chart indicated .2 and the AW-106 strip chart indicated .5 The ARP requires IH and HPT to perform surveys(assements) when tank pressures reach >.2.
This may also have been to case in the resent ventilation loss at AP, SY and AN.

Requirement Not Satisfied	Source Document Number
ARP Tank Pressurization, Hazard assesment 10 CFR 851	
Equipment Identification Number	**System Identification**
	Ventilation Tank Primary

Immediate actions Taken or Planned

Contacted manager, notified HAMTC Safety
I notified upper Management when issue was brought to me.

Recommended Corrective actions

Enhance the procedures to talk to each other more. Have a hierarchy of alarms

Originator Contact

I would like to review the the corrective actions at closure to ensure they were effective

Originators Name	Originators ID	Originators Phone	Date Initiated
Slaugh, Don M	H0036458	(509) 373-3298	10/16/2008

SHIFT OPERATIONS REVIEW

Title

Issue with lack of actions to the ARP when the primary exhauster shut off.

How Discovered	Agency
self-ID prior to event	

Reportability	SSC Operability	Operability Review	Comp Measures Req
Non-Reportable	N/A	N/A	

Describe actions Taken or Recommended

BO SO initiated the following action in the 10/16/08 shift insrtrcutions: "Review the Alarm Response Procedures (ARPs) associated with a loss of primary ventilation in each tank farm. Remember, there may be several alarms as a result of a loss of primary ventilation. Ensure all of the required actions for each valid alarm are completed. Additionally, before restoring general access to the affected farm, ensure that the farm has been surveyed/monitored/swept by both an IHT AND an HPT. Brief your shift personnel on these requirements so that they know to review all applicable ARPs on a loss of primary ventilation. "

SO Reviewer Name	SO Reviewer ID	SO Reviewer Phone	SO Review Date
Wallgren, Carl B	H0099480	(509) 373-2689	10/16/2008

SCREENING

PER Significance Level

PER with Resolution

Independent Assessment Review	Occurrence Report Number	Externally Identified	
No		No	
Assigned Responsible Manager	**Facilities Rep / SSO**	**Safety Management Rep**	
Owen, Pete			
Program		**Safety Management Program**	
• **N/A**		• **N/A**	

PER Screening Comments

PER w/ RES with informal Apparent Cause Analysis.
cc: Chris Woehle
(Nancy Brown 10/20/08)

Causal Code

MGT/Comm/Train	Human Performance	GEMS	Equip/Eng/Other
Failed Barrier	**ORPS Code**	**Functional Area**	**Work Process**
	Not Applicable	Operations	• Communications • Procedures: Implementation, Compliance
ISMS	**Consequence Code**		
Identify and analyze hazards	• Equipment/System Status - Inadequate control of equipment/system status • Safety Concerns - Safety concerns, suggestions, and potential safety issues		
PER Screening Chair	**PER Screening Chair ID**	**PER Screening Chair Phone**	**PER Screening Date**
Brown, Nancy L	H0088797	(509) 373-0992	10/20/2008

PAAA REVIEW

PAAA Screening	PAAA Codes	Function Codes	
PAAA, Non-NTS Reportable	• 10 CFR 830.122 (e)(1)	• Conduct of Operations (including Drills and Exercises)	
NTS Report Number	**NTS Report Date**		
Repetitive / Recurrent	**Programmatic**	**Intentional Violation / Misrepresentation**	
No	No	No	

PAAA Screening Comments

Entered review for CE Anderson.

PAAA Reviewer Name	PAAA Review Date
Quintana, Michael S	10/20/2008
PAAA Approver Name	**PAAA Approve Date**
Anderson, Craig E	10/27/2008

SENIOR MANAGEMENT REVIEW/CONCURRENCE

TF Operations Morning Leadership Call

None. 10/21/08

Instructions for Responsible Manager

Review the PER Screening Tab and Senior Manager Review for requested data. Complete the task in E-STARS in accordance with TFC-ESHQ-Q_C-C-01, and TFC-ESHQ-Q_ADM-C-12 Apparent Cause Analysis & Corrective Action Planning.

Senior Management	Sr Mgmt ID	Sr Mgmt Phone	Sr Mgmt Review Date
Owen, Annette	H0054042	(509) 372-0533	10/21/2008

CAUSE ANALYSIS

Description of Occurrence

Extent of Condition

Safety Significance

Generic Implications

Remedial Corrective Action

Causal Analysis, Apparent Cause and/or Root Cause Analysis

ATTACHMENTS

Link to PER

AUDIT HISTORY

Change Date	Auditor	Comments
10/21/2008 08:09	Owen, Annette	Responsible Manager Task Launched by Owen, Annette

-- End of Report --
10/30/2008 11:08 AM

Attachment 3 October 17, 2008

RIVER PROTECTION PROJECT
BASE OPERATIONS SHIFT INSTRUCTIONS

Reviewed: A_____ B_____ C_____ D_____ T_____

PLANNED ACTIVITIES (Notify Shift Operations Manager of any activities that cannot be completed)

Shift Operations

- Initiated 241-AP Fire Watch 10/15/08 @ 1800 Continue (2 hr frequency).
- Monitor the building temperature in the hot side of 242-S as specified below:
  If OUTSIDE temperature falls below 40 degrees, initiate a building temperature watch to be performed every 4-hours.
  If INSIDE temperature in the process cells drops below 40 degrees, initiate a 2-hour building temperature watch.
  If INSIDE temperature in the process cells drops below 32 degrees, the Hanford Fire Department is to be notified, and they will drain the system as a last resort to prevent it from freezing. If the system has to be drained, the 2-hour temperature watch will become a **1-hour fire watch.**

Double Shell Tanks

- 241-AP Annulus Conductivity Probe Leak Detector Check's - Sat/Sun days

Single Shell Tanks

- There will no longer be a Car 46 on the weekends. Therefore the survey instruments will not be checked daily. SST operators will need to check out the required survey instruments or call Car 11 for a checkout. Sunday nightshift, Shift HPTs will perform the instrument checks so they are ready for Monday days.

ACTIONS (Senior Shift Manager's initial on Action Items indicates completion for assigned personnel)

1. Review the Alarm Response Procedures (ARPs) associated with a loss of primary ventilation in each tank farm. Remember, there may be several alarms as a result of a loss of primary ventilation. Ensure all of the required actions for each valid alarm are completed. Additionally, before restoring general access to the affected farm, ensure that the farm has been surveyed/monitored/swept by both an IHT AND an HPT. Brief your shift personnel on these requirements so that they know to review all applicable ARPs on a loss of primary ventilation. SSM initial below when this action has been completed for your shift.
   A_____ B_____ C_____ D_____ T_____
2. Review: Tailgate 10/20/2008 with your shift crew.
   A_____ B_____ C_____ D_____ T_____
3. Review: Tailgate 10/13/2008 with your shift crew.
   C_____

INFORMATION

1. (09/23/08) Per interoffice memo 71F60-FAS-08-003 the 241-AW, AW Ventilation Tank Primary System has completed all testing requirements and has been approved. The new (W-314) exhauster in AW is now declared operable. The old 241-AW exhauster is now declared out of service.

JE Andrews, Base Operations, Senior Shift Manager

1535 - Reviewed logbook [illegible]
BOSSM. BA Johnson

1722 - Relieved as BOSSM by R. Anderson.

1722 ASSUMED DUTIES AS BASE OPS SSM

1730 COMPLETED PRE-SHIFT BREIF WITH B-SHIFT.

10/7/05

0515 Relieved as BASE OPS SSM by D. STRASSER

0515 Relieved Rick Anderson as Base Ops SSM

0720 Completed Pre-shift Brief with C & T shifts.

0845 Crane into AP farm

0915 Crane out of AP farm

0916 AW annulus exhausters shutdown while performing maintenance work.

0925 SY-B Train shutdown while performing maintenance work.

0942 AW annulus exhausters have been restarted

Late Entry 0925 Unplanned LCO 3.2.1 Entry for SY Exhauster shutdown. Actions

A.1 Verify the flammable gas concentration is ≤ 25% of the LFL in tank headspace 72 hours and once per 72 hrs thereafter

Due NLT 10/11/05 @ 0925 AND

10/5/05

A.2.1 Restore the primary ventilation system to Operable status 14 days

Due NLT 10/22/05 @ 0925 OR

A.2.2 Provide an alternative primary ventilation system for the affected tank 14 days

Due NLT 10/19/05 @ 0925 OR

A.2.3.1 Submit a Recovery Plan to the ORP 30 days Due NLT 11/7/05 @ 0925

0945 SY B Train Exhauster could not be restarted SY farm being controlled as a VCZ

1120 Notified Environmental on Call of SY Exhauster shutdown

1135 Completed Notifications concerning sig ops issue & SY Exhauster shutdown.

1210 SY B-Train primary Exhauster Restarted PLC interlock switch left in Bypass.

1215 IHI Reports No detectable NH_3 or VOC. in SY farm. Authorized dumpsterings of SY farm VCZ

Attachment 4

10/8/08 Day Shift D.W. Strasser

1500 IHT Reports That SY-101, SY-102 and SY-103 Tank Dome space Flammable Gas Surveillance has been Completed All tanks read 0% LFL Exiting LCO 3.2.1 clearing Red Arrow from pg 63 @ 0942

1515 SOEN sent for clearance of VCZ and Exit of LCO 3.2.1 for SY-farm.

1520 Environmental on call notified of SY Exhauster being restarted

1530 Relieved as Base Ops SSM by Brian Johnson

1530 - Reviewed logbook, assumed duties of BOSSM. BA Johnson

1549 - Per review of daily OPS. 05, AY-102 VTA record sampler has been returned to service.

1552 - John Guberski, Environmental, notified of 1549 hrs. log entry.

1616 - Notified via email from Toni Faust, Environmental, that the WDOH was notified of the SY-B VTP shutdown today (ref. pg. 63 @ 0925). SOEN message complete. CNS: WRPS-081000005.

1625 - Notified Courtney Blanchard, DOE-ORP, of 1616 hrs. logbook entry.

1716 - Relieved as BOSSM by R. Anderson.

1716 ASSUMED DUTIES AS BASE OPS SSM

1930 COMPLETED PRE-SHIFT BREIF WITH B-SHIFT.

10/8

10/9/08 B-SHIFT R. ANDERSON

0100 SY PRIMARY EXHAUST D/P INTERLOCK SWITCH RETURNED TO ENABLE POSITION

0505 Relieved as BASE OPS SSM by D. STRASSER

0505 Relieved Rick Anderson as Base Ops SSM

0716 Completed Pre-shift Brief with C+T shifts

0937 Authorized SY-B primary ventilation CAM + Record Sampler paper exchange

1007 SY-B primary exhauster + Annulus Exhauster CAM + record Sampler paper exchanges Complete

1025 IHT Reports that AY/AZ Flammable Gas Surveillance of tank Dome spaces has been Completed. All tanks read 0% LFL.

Next AY SR 3.2.1.4 due NLT 10/14/08 @ 0830

Next AZ SR 3.2.1.3 due NLT 10/14/08 @ 0838

1100 After Review of the documentation that was used to classify valves as Safety Significant, it was determined that the valves were tested with water, not Air or Nitrogen and at varying pressures. Additionally, documentation discussing the equivalency of the testing performed to that specified in FCI 70-2-2003, as allowed by the DSA, could not be identified. As a result, it was determined this condition represents a potential inadequacy of the documented Safety analysis (PISA) This (PISA) is declared an Occurrence Group 3B(2)SC-3 for "Declaration of a potential inadequacy of the documented Safety analysis (a potential positive USQ).

1130 Notified Fac Rep Courtney Blanchard of occurrence report.

1135 Notified Sr Management Rep Bill Ross of Occurrence Report

1140 Notified ONC of Occurrence report.

1155 Sent SOEN Regarding Occurrence report.

1200 AW-101 Ensraf discovered to be out of Service. No operable level indication device available in AW-101.

Attachment 4

0612 Relieved Carl Wallgren as DO 221

0720 Completed Pre shift Brief with B+T shifts

1100 Upon Review of Weekly Rounds it was discovered that AY-102 leak detection pit level is currently 21.6" which is greater than the Maximum operating limit of 20". Maximum design Limit is 70.0"

1155 Notified Central Design Authority + Standards Manager Eric Nelson of AY-102 leak detection pit level

1303 AN Annulus Exhausters shut down to support maintenance.

Late Entry 1300 Instrument Techs have Completed checking AP annulus leak detectors on Zone 3 for each tank. No Leaks detected

1355 AN Annulus Exhausters A + B Trains Restarted.

1407 AW Exhauster shutdown during Maintenance. All personnell exiting farm. AW-farm being controlled as a VCZ

1440 FWS Reports AZ Annulus exhauster Aerosol testing Completed Set and Stack airflow Completed

1452 AW primary Exhauster B-Train Restarted.

1500 IHT Completed AW farm sweep. No detectable NH_3 or VOC, AW farm downgraded from a VCZ.

1501 AN Annulus exhauster CAM functional passed and AN Annulus exhauster A+B Trains restarted.

1540 Next AP ALD readings due NLT 10/16/08 @ 1300.

1541 Relieved as Base Ops SSM by Rick Anderson

1541 ASSUMED DUTIES AS BASE OPS SSM

1630 NCO REPORTS AN PRIMARY EXHAUSTER SHUTDOWN.

1645 AN PRIMARY EXHAUSTER SHUTDOWN DUE TO MODBUS FAILURE. COMPONENT TOGGLES

AND SOM P. OWEN. SOEN MESSAGE SYSTEM.

~~1700 SOEN MESSAGE SENT FOR FACT FINDING ON MISSED AP ANNULUS L/D READINGS~~ 10/16/08

1710 AN FARM POSTED AS VCZ.

1730 Relieved as Base Ops SSM by C. WALLGREN

1730 ASSUMED DUTIES AS BO SSM

1742 DISCUSSED AN VTP RESTART WITH FACILITY MANAGER. CRAFT WILL BE DEPLOYED FIRST THING TOMORROW TO RESET MOD BUS WHICH SHOULD ALLOW RXH RESTART. EXHAUSTER DOWNTIME EXPECTED TO BE LESS THAN 24 HOURS.

ENTER LCO 3.2.1 NLT 10/16/08 @ 1630 IF AN VTP IS NOT RETURNED TO OPERABLE.

1927 COMPLETED SHIFT BRIEF W/ A-SHIFT.

2100 HPT REPORTS AN FARM SWEEP COMPLETE, NO ELEVATED CONTAMINATION READINGS FOUND.

10/15/08

10/16/08

Attachment 4

10/14/08 A-SHIFT WALLGREN

0005 IHT COMPLETED FLAM GAS LCO 3.2.1 SRS IN AY & AZ, ALL TANKS 0% LFL, NEXT DUE: AY = 10/20/08 @ 2330, AZ = 10/20/08 @ 2340.

0510 RELIEVED AS BO SSM BY D. STRASSER

0510 Relieved Carl Wallgren as Base Ops SSM

0600 ER-1 Operator reports AY/AZ primary ventilation shutdown. Cause of shutdown unknown.

0610 TMACS Reports high rad alarms in for AY/AZ. Dispatched HPT to perform perimeter Dose surveys of AY/AZ. AY/AZ controlled as a VCZ.

0625 HPT Reports No Dose increase around AY/AZ farms.

Late Entry 0620 NCO Reports that AY/AZ primary ventilation shut down on Low DP alarm across second HEPA filter PDAC-AZ-K1-420 on graphic 17 ARP-T-251-00017 followed DP alarm cleared immediately upon reset. AY/AZ primary ventilation Restarted.

0642 TMACS Reports AY/AZ high pressures

0648 NCO reports AY/AZ ventilation shutdown on Low DP alarm across second HEPA filter Alarm PDAC-AZ-K1-420.

0655 Dispatched HPT to 702-AZ to Dose rate A-Train

0658 Started 702-AZ Ventilation on B-fan and B-Train

0710 HPT Reports No Elevated Dose rates on 702-AZ A-Train

0715 AY/AZ primary ventilation shutdown on Low DP Across second HEPA B-Train

0720 Dispatched HPT to verify Dose rates on 702-AZ B-Train

0750 HPT Reports No Elevated Dose rates on 702-AZ B-Train

0805 Scott Conrad, Environmental on call rep, reports that he completed Notifications to WDOH for the AY primary exhauster shutdown of 10/13/08 and the

10/14/08 Day shift D.W. Strasser

0816 Notified ORP fire Rep of Notifications to WDOH

0830 Scott Conrad, Environmental on Call, Notified WDOH of AY/AZ primary exhauster shutdown.

0835 SOEN message sent and ORP fire Rep notified of Notification of WDOH for AY/AZ shutdown

0845 Completed Notifications regarding scheduled Fact finding (MO-511 side B @ 1400) for missed ALD reading.

0930 Authorized ER-1 NCO to Restart 702-AZ Exhauster with DP interlock in Bypass and to increase total flow within bounds of process memo PM-BO-08-006 "241-AZ-702 primary ventilation Flow Rates."

0937 ER-1 NCO Reports that 702-AZ (AY/AZ) primary ventilation Restarted on B-fan A-filter Train with DP interlock in bypass

1015 SOEN message sent regarding environmentals Notification to WDOE for missing required 24 HR ALD reading on 10/14/08.

1100 IHT Reports that Flammable Gas surveillances have been Completed for AP farm tanks. All tanks read 0% LFL. Continue LCO 3.2.1 entry for AP-farm

@ 1105

A.1 Verify the Flammable Gas Concentration is ≤25% of the LFL in the head spaces. Once per 72 hrs Due NLT 10/14/08 @ 0950 AND

A.2.1 Restore the Primary ventilation to Operable status Due NLT 10/27/08 @ 1630 (14 days) OR

A.2.2 Provide an Alternature primary ventilation system to Operable for the affected tank Due NLT 10/27/08 @ 1630 (14 days) OR

A.2.3.1 Submit a recovery plan to the ORP (30 days) Due NLT 11/12/08 @ 1630.

Clearing Red Arrow from 10/13/08 @ 1130 Pg 71

Attachment 4

Attachment 5

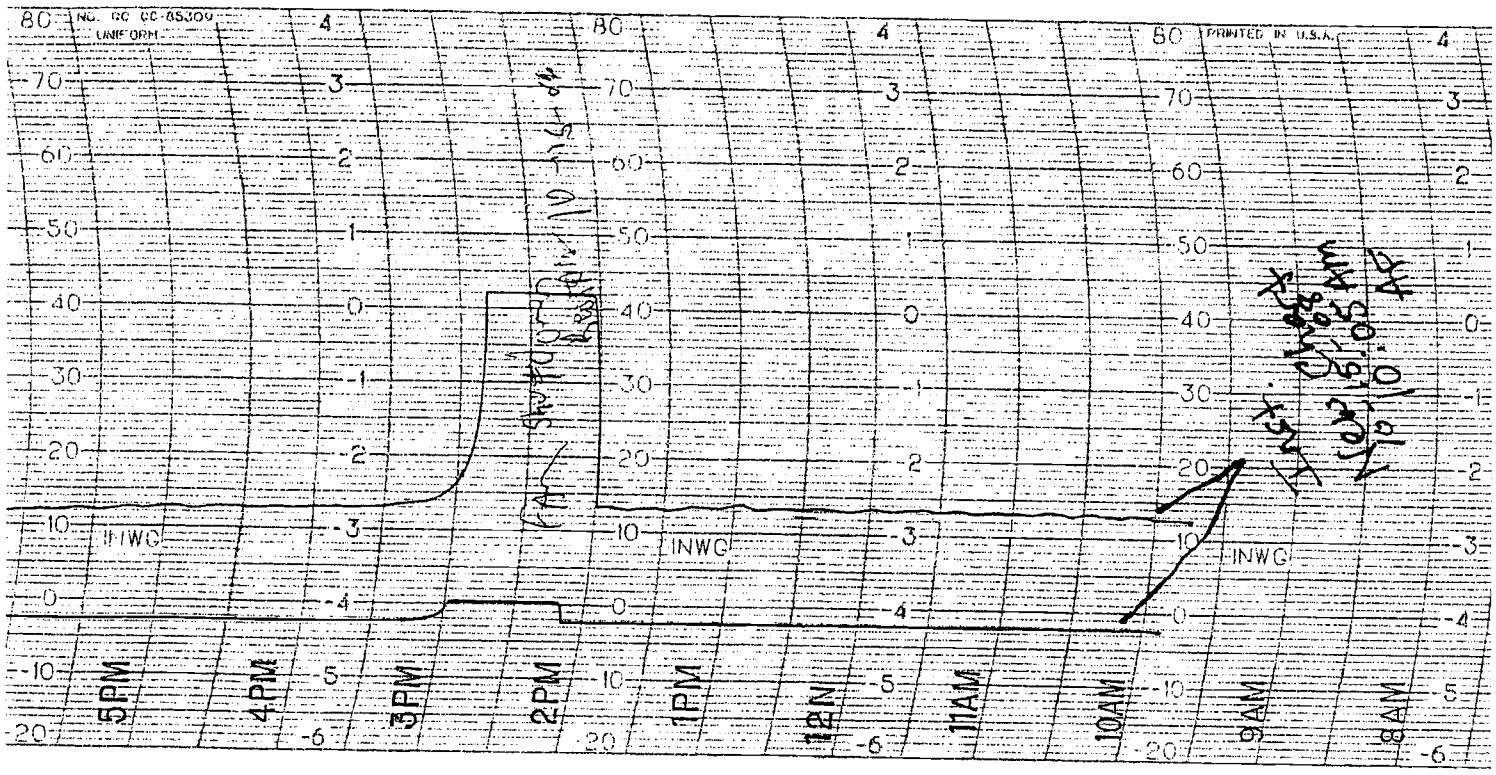

A3
FE 164

Attachment 5

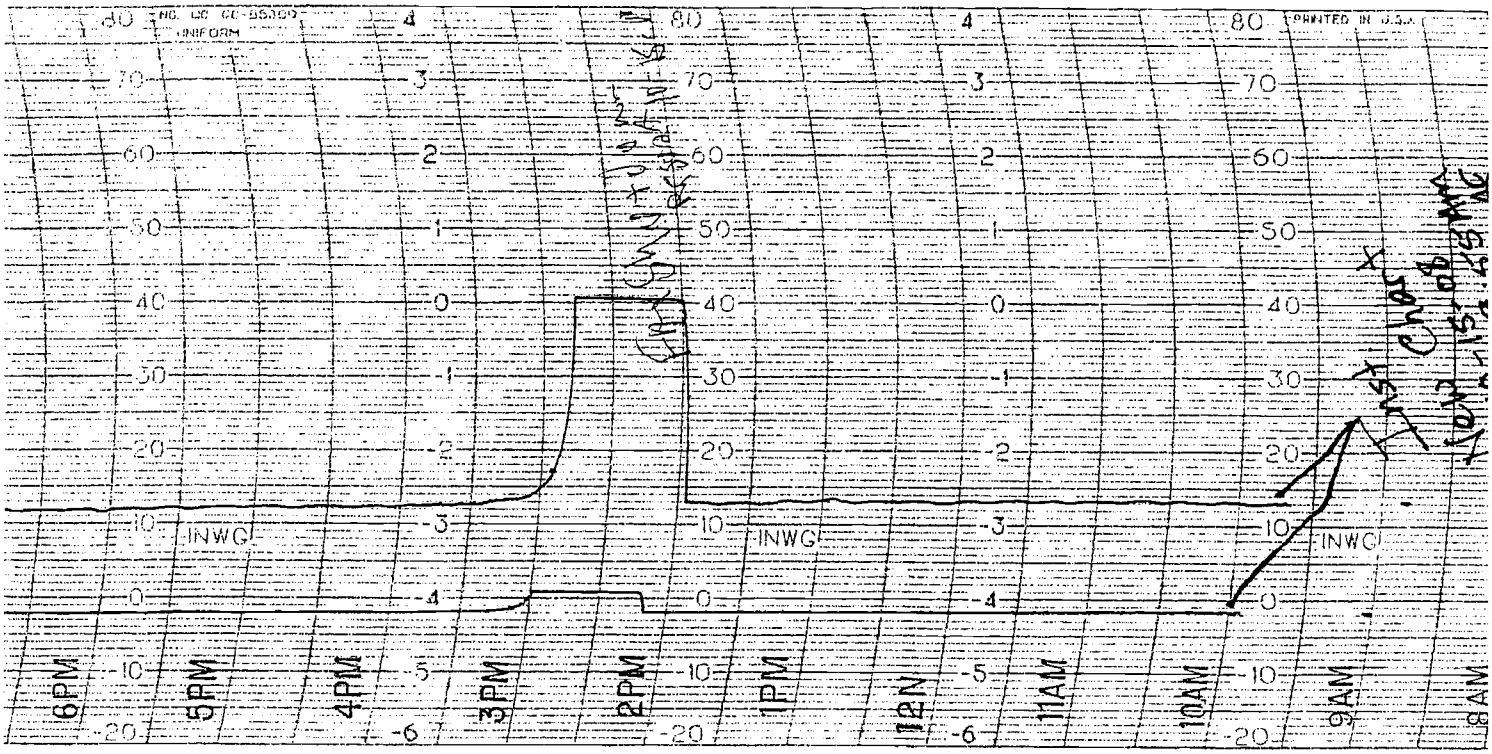

AW
TK 103

Attachment 5

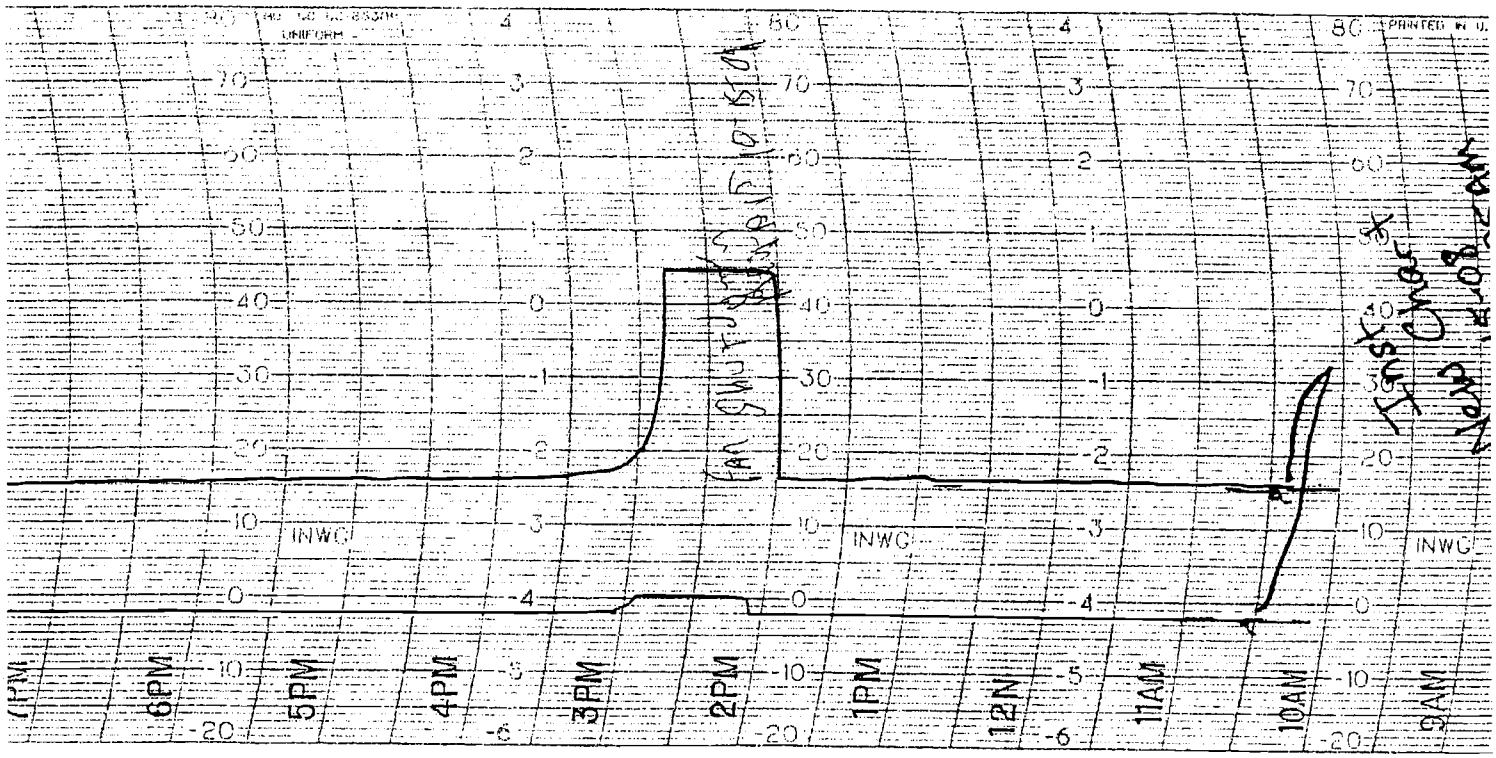

A3
TK 106

Facility: 241-AN-271 Building

HI PRESSURE TANK 105 (LOW VACUUM) (WST-PAH-115)

Panel: ANN-105 **Alarm #:** 02

Source: AN05C-WST-PT-115 **Setpoint:** - 0.50 inches WG

Alarm Class: Plant Stability

Alarm Description: Tank 241-AN-105 vapor space has an increasing pressure (Low Vacuum).

NOTE - Alarm Response Procedures are not designed for, nor intended to be applied to, "expected" alarms generated by approved work activities or procedures.

Automatic Actions:

1. Activates Audible Warning Alarm, "AN TANKS HI PRESSURE", to notify farm occupants of pressurization.

Immediate Actions:

[1] **EVACUATE** personnel from farm to change trailer.

[1.1] **CONTROL** further access to Farm, **AND** **NOTIFY** Shift Manager.

[2] **STOP** all transfers physically connected to tank 241-AN-105.

[3] **CHECK** status of the following annunciators:

- Panels ANN-101 through ANN-104 and ANN-106 through ANN-107, Alarm 02, HI PRESSURE TANK 10X, (LOW VACUUM), (WST-PAH-11X)
- Panel ANN-102 Alarm 10, HI RAD ALARM PRIMARY EXH STACK, (VTP-RAH-510)
- Panel ANN-108 Alarm 07, FAN FAILURE A&B TRAIN PRIMARY EXH (VTP-XA-310)
- Panel ANN-108 Alarms 02, 03, 05, 06 & 09 (HEPA filter and pre-filter high differential pressure alarms and D/P instrument failure alarms).

(Continued on Next Page)

Facility: 241-AN-271 Building

Panel: ANN-105 **Alarm #:** 02

Source: AN05C-WST-PT-115 **Setpoint:** - 0.50 inches WG

HI PRESSURE TANK 105 (LOW VACUUM) (WST-PAH-115)

02

(Continued)

Immediate Actions (Cont.):

NOTE - The following readings, taken from 241-AN-271 building, and Tank Monitoring and Control System (TMACS), are to determine if tank conditions are unstable (i.e., symptoms of a tank pressurization and/or gas release event). When exhaust system is shut down, it is expected tank pressure will go to zero. Pressure fluctuations of greater than plus or minus 0.2 inches WG indicate unstable conditions.

[4] **CHECK** pressure strip chart recorders for each tank, AN271-WST-PR-111 through AN271-WST-PR-117, located on alarm panel just below alarm windows (red colored traces) to see if tank pressures have exceeded +0.2 inches WG or if there are fluctuations greater than plus or minus 0.2 inches WG.

[5] **CONTACT** TMACS to determine if:

- Tank waste level has changed more than 0.5 inches from recent trend information
- Tank temperature has changed more than 5 degrees from recent trend information on individual thermocouples (if reading available at TMACS).

[6] **NOTIFY** Shift Manager of conditions.

[7] **REQUEST** Shift Manager evaluate need to make an unplanned entry into LCO 3.2.1 and notify Environmental.

[8] **IF** tank parameters indicate unstable conditions (meets the criteria listed above), HPT, Industrial Hygiene Technician and Operator **DON** appropriate personal protective equipment (self contained breathing apparatus (SCBA) and one set of protective clothing).

(Continued on Next Page)

Facility: 241-AN-271 Building

Panel: ANN-105 **Alarm #:** 02

Source: AN05C-WST-PT-115 **Setpoint:** - 0.50 inches WG

HI PRESSURE TANK 105 (LOW VACUUM) (WST-PAH-115)

02

(Continued)

Immediate Actions (Cont.):

[9] **ENSURE** Farm is posted in accordance with IH recommendations.

[10] **PERFORM** visual observation of farm for indications of problems such as smoke, sparks, equipment obviously damaged or not operating properly.

[11] **IF** visual observation of farm shows evidence of fire, **RECOMMEND** to Shift Manager response per TF-ERP-006.

NOTE - Steps [12] and [13] may be performed concurrently.

[12] **IF** primary tank exhaust system is not running, and Panel ANN-102 Alarm 10, HI RAD ALARM PRIMARY EXH STACK, (VTP-RAH-510) is NOT IN ALARM, **RESTART** exhaust system per TO-060-102, as directed by the Shift Manager.

[13] **IF** directed by Shift Manager, **REQUEST** HPT to perform a radiological assessment and IHT to perform an assessment for ammonia and organics in the Farm.

[14] **IF** HPT reports a spread of contamination, **RECOMMEND** to Shift Manager response per TF-AOP-003.

Supplemental Actions:

[15] **MONITOR** previously indicated tank parameters until they return to baseline values.

[16] **NOTIFY** Shift Manager of all actions and findings.

(Continued on Next Page)

Facility: 241-AN-271 Building

Panel: ANN-105 **Alarm #:** 02

Source: AN05C-WST-PT-115 **Setpoint:** - 0.50 inches WG

HI PRESSURE TANK 105 (LOW VACUUM) (WST-PAH-115)

02

(Continued)

Possible Causes:

1. Both Primary A and B Train fans OFF.
2. Hot waste entering tank during transfer raises pressure through evaporation.
3. Open riser, open pit drain, and/or missing sealing media on pit cover block cracks/seams/penetrations, admits too much air.
4. Failure of pressure transmitter or alarm switch.
5. Gas release event if accompanied by level and temperature anomalies.
6. Plugged HEPA filters.
7. Failed closed exhaust damper duct valve.

References:

Drawings: H-14-020601

Documents: TO-060-102, Operate 241-AN Primary Ventilation Systems (VTP)
TF-AOP-003, Response to Elevated Airborne Radioactivity
TF-ERP-006, Emergency Response Procedure 006, Facility Fire Response
OSD-T-151-00007, Operating Specifications for the Double Shell Storage Tanks
HNF-SD-WM-TSR-006, Tank Farms Technical Safety Requirements

Facility: 241-AN-271 Building

YELLOW

FAN FAILURE A & B TRAIN PRIMARY EXH (VTP-XA-310)

Panel: ANN-108 **Alarm #:** 07

Source: AN241-VTP-PDS-310/410 **Setpoint:** 1.25 inches WG

Alarm Class: Technical Safety Requirement (LCO 3.2.1, DST Primary Ventilation Systems)

Alarm Description: The primary exhaust fan system has failed or shut down.

NOTE - Alarm Response Procedures are not designed for, nor intended to be applied to, "expected" alarms generated by approved work activities or procedures.

Immediate Actions:

[1] **STOP** all waste disturbing activities in AN Farm, including transfers.

[2] **EVACUATE** all personnel within the farm to the change trailer.

NOTE - On loss of ventilation, tank vacuum would be expected to drop (pressure increase) to approximately 0.0 inches WG. The tank high pressure (low vacuum) alarms will activate at - 0.5 inches WG.

[3] **CHECK** the status of the following annunciators:

- Panels ANN-101 through ANN-107 alarm #02, HI PRESSURE TANK 10X, (LOW VACUUM), (WST-PAH-11X).

[4] **INSPECT** pressure recorder strip charts AN271-WST-PR-111 through AN271-WST-PR-117 located below alarm windows in 271-AN to verify that tank pressures are approximately 0 inches WG. This would indicate that there is no ventilation on the AN tanks and the primary exhauster has shut down.

[5] **CHECK** the status of the following annunciator:

- Panel ANN-102, alarm #10, HI RAD ALARM PRIMARY EXH STACK (VTP-RAH-510).

[6] **NOTIFY** Shift Manager to evaluate if entry into LCO 3.2.1 actions is required and of findings.

(Continued on Next Page)

Facility: 241-AN-271 Building

YELLOW

FAN FAILURE
A & B TRAIN
PRIMARY EXH
(VTP-XA-310)

07

Panel: ANN-108 **Alarm #:** 07

Source: AN241-VTP-PDS-310/410 **Setpoint:** 1.25 inches WG

(Continued)

Supplemental Actions:

[7] **IF** Panel ANN-102 alarm #10, HI RAD ALARM PRIMARY EXH STACK (VTP-RAH-510) is active, DO NOT restart fans, **AND**

RESPOND to high radiation alarm per ARP-T-221-00102, alarm #10.

[8] **IF** the HI RAD ALARM PRIMARY EXH STACK did NOT annunciate, **AND**

IF all tank vacuums have remained (and are presently) less than + 0.2 inches WG, **REQUEST** permission from Shift Manager to ENTER farm and INVESTIGATE cause of shutdown.

[9] **IF** any tank pressures have exceeded or presently exceed + 0.2 psig, **RESPOND** per the appropriate alarm response procedure for High Pressure alarm (Panels ANN-101 through ANN-107 alarm #02, HI PRESSURE TANK 10X).

Possible Causes:

1. Mechanical failure of the operating and standby fans.
2. Mechanical failure of the operating fan combined with a sticking inlet MOV valve on the standby system (most likely in cold weather).
3. High radiation level detected by exhaust stack CAM, shutting down the (K1) primary system through interlock.
4. HIGH/LOW DP detected across first or final stage HEPA filter respectively, PLC Failure, or Failure of DP instruments shutting down ventilation by interlock

References:

Drawings: H-14-020101
Documents: TO-060-102, "Operate 241-AN Primary Ventilation Systems (VTP)"
ARP-T-221-00102, Respond to Panel ANN-102 Alarms at 271-AN
HNF-SD-WM-TSR-006, Tank Farms Technical Safety Requirements

Facility: 241-AW-271 Building

HI PRESSURE TANK 106 (LOW VACUUM) (WST-PAH-116)

Panel: ANN-106 **Alarm #:** 02

Source: AW06C-WST-PT-116 **Setpoint:** - 0.5 inches WG

02

Alarm Class: Equipment Status

Alarm Description: Tank 241-AW-106 vapor space has an increasing pressure (Low Vacuum).

NOTE - Alarm Response Procedures are not designed for, nor intended to be applied to, "expected" alarms generated by approved work activities or procedures.

Automatic Actions:

1. Activates Audible Warning Alarm, "AW TANKS HI PRESSURE", to notify farm occupants of pressurization.

Immediate Actions:

[1] **EVACUATE** personnel from the farm to change trailer.

[1.1] **CONTROL** further access to Farm, **AND**

NOTIFY Shift Manager.

[2] **STOP** all waste disturbing activities in 241-AW-106.

[3] **CHECK** status of the following annunciators:

- Panels ANN-101 through ANN-105 alarm 02, HI PRESSURE TANK 10X, (LOW VACUUM), (WST-PAH-11X)
- ANN-AUX Panel alarm 04, FAN FAILURE A & B TRAIN PRIMARY EXH (VTP-XA-310A)
- Panel ANN-102 alarm 10, HI RAD ALARM PRIMARY EXH STACK (VTP-RAH-510B)
- ANN-AUX Panel alarms 01, 03, 06, and 08 (HEPA filter and pre-filter high differential pressure alarms and D/P instrument failure alarms).

(Continued on Next Page)

Facility: 241-AW-271 Building

Panel: ANN-106 **Alarm #:** 02

Source: AW06C-WST-PT-116 **Setpoint:** - 0.5 inches WG

HI PRESSURE TANK 106 (LOW VACUUM) (WST-PAH-116)

02

(Continued)

Immediate Actions (Cont.):

NOTE - The following readings (from Steps [4] and [5]), taken from the 241-AW-271 building and Tank Monitoring and Control System (TMACS), are used in Step [8] to determine if tank conditions are unstable (i.e., symptoms of a tank pressurization and/or gas release event). When the exhaust system is shut down, it is expected that tank pressure will go to zero. Pressure fluctuations of greater than plus or minus 0.2 inches WG indicate unstable conditions.

[4] **CHECK** pressure strip chart recorders for each tank, AW271-WST-PR-111 through AW271-WST-PR-116, located on alarm panel just below alarm windows (red colored traces) to see if tank pressures have exceeded +0.2 inches WG or if there are fluctuations greater than plus or minus 0.2 inches WG.

[5] **CONTACT** TMACS to determine if:

- Tank waste level has changed more than 0.5 inches from recent trend information (if reading available at TMACS)
- Tank temperature has changed more than 5 degrees from the recent trend information on individual thermocouples (if reading available at TMACS).

[6] **SILENCE** pressurization alarm.

[7] **NOTIFY** Shift Manager of conditions **AND**

REQUEST the following:

- Health Physics/Industrial Hygiene support.
- Shift Manager EVALUATE need to make an unplanned entry into LCO 3.2.1 and notify Environmental.

(Continued on Next Page)

Facility: 241-AW-271 Building

Panel: ANN-106 **Alarm #:** 02

Source: AW06C-WST-PT-116 **Setpoint:** - 0.5 inches WG

HI PRESSURE TANK 106 (LOW VACUUM) (WST-PAH-116)

02

(Continued)

Immediate Actions (Cont.):

[8] **IF** the tank parameters indicate unstable conditions (meets the criteria listed above), Health Physics Technician (HPT), Industrial Hygiene Technician and Operator **DON** appropriate personal protective equipment (self contained breathing apparatus (SCBA) and one set of protective clothing).

[9] **ENSURE** Farm is posted in accordance with IH recommendations.

[10] **PERFORM** a visual observation of the farm for indications of problems such as smoke, sparks, equipment that is obviously damaged or not operating properly.

[11] **IF** visual observation of the farm shows evidence of a fire, **RECOMMEND** to Shift Manager response per TF-ERP-006.

NOTE - Steps [12] and [13] may be performed concurrently.

[12] **IF** primary tank exhaust system is not running, and Panel ANN-102 alarm 10, HI RAD ALARM PRIMARY EXH STACK, (VTP-RAH-510B) is "not" in alarm, **RESTART** exhaust system per TO-060-104, as directed by Shift Manager.

[13] Health Physics Technician and Industrial Hygiene Technician **PERFORM** assessments for radioactivity, ammonia and organics in the farm.

[14] **IF** Health Physics Technician reports a spread of contamination, **RECOMMEND** to Shift Manager response per TF-AOP-003.

Supplemental Actions:

[15] **MONITOR** previously indicated tank parameters until they return to baseline values.

[16] **NOTIFY** Shift Manager of all actions and findings.

(Continued on Next Page)

Facility: 241-AW-271 Building

Panel: ANN-106 **Alarm #:** 02

Source: AW06C-WST-PT-116 **Setpoint:** - 0.5 inches WG

HI PRESSURE TANK 106 (LOW VACUUM) (WST-PAH-116)

02

(Continued)

Possible Causes:

1. Both Primary A and B Train fans OFF.
2. Hot waste entering tank during transfer raises the pressure through evaporation (more likely with jetted transfers).
3. Excessive steam jetting or line blowing following a transfer.
4. Open riser, open pit drain, and/or missing sealing media on pit cover block cracks/seams/penetrations, admits too much air.
5. Failure of pressure transmitter or pressure alarm switch.
6. Gas release event if accompanied by level and temperature anomalies.
7. Plugged HEPA filters.
8. Failed closed exhaust damper duct valve.

References:

Drawings: H-14-020602

Documents: HNF-SD-WM-TSR-006, Tank Farms Technical Safety Requirements
OSD-T-151-00007, Operating Specifications for Double Shell Storage Tanks
TO-060-104, Operate 241-AW Primary Tank Ventilation System (VTP)
TF-AOP-003, Response to Elevated Airborne Radioactivity
TF-ERP-006, Emergency Response Procedure 006, Facility Fire Response

Facility: 241-AW-271 Building

RED

FAN FAILURE
A & B TRAIN
PRIMARY EXH
(VTP-XA-310A)
04

Panel: ANN-AUX **Alarm #:** 04

Source: AW241-VTP-PDS-410 **Setpoint:** 1.25 inches WG
AW241-VTP-PDS-310

Alarm Class: Technical Safety Requirement (LCO 3.2.1 DST Primary Ventilation Systems

Alarm Description: The primary exhaust fan system has failed or shut down.

NOTE - Alarm Response Procedures are not designed for, nor intended to be applied to, "expected" alarms generated by approved work activities or procedures.

Immediate Actions:

[1] **NOTIFY** Shift Manager to EVALUATE if transfer into or out of AW Farm is occurring and the need to shut down the transfer.

[2] **EVACUATE** all personnel within the farm to the change trailer.

NOTE - On loss of ventilation, tank vacuum would be expected to drop (pressure increase) to approximately 0.0 inches WG. Tank high pressure (low vacuum) alarms will activate at - 0.5 inches WG.

[3] **CHECK** status of the following annunciators:

- Panels ANN-101 through ANN-106, alarm 02, HI PRESSURE TANK 10X (LOW VACUUM), (WST-PAH-11X).

[4] **INSPECT** strip chart recorders AW271-WST-PR-111 through PR-116, located on alarm panel just below alarm windows in 271-AW to verify tank pressures are approximately 0 inches WG. This would indicate there is no ventilation on AW tanks.

[5] **CHECK** status of the following annunciators:

- Panel ANN-102, Alarm 10, HI RAD ALARM PRIMARY EXH STACK, (VTP-RAH-510B).

(Continued on Next Page)

Facility: 241-AW-271 Building

RED

FAN FAILURE A & B TRAIN PRIMARY EXH (VTP-XA-310A)

04

Panel: ANN-AUX **Alarm #:** 04

Source: AW241-VTP-PDS-410 AW241-VTP-PDS-310 **Setpoint:** 1.25 inches WG

(Continued)

Supplemental Actions:

[6] **NOTIFY** Shift Manager of findings

[7] **IF** Panel ANN-102, Alarm 10, HI RAD ALARM PRIMARY EXH STACK, (VTP-RAH-510B) is active, "do not" restart fans, **AND**

RESPOND to high radiation alarm per ARP-T-231-00102, Alarm #10.

[8] **IF** HI RAD ALARM PRIMARY EXH STACK "did not" annunciate, and if all tank vacuums have remained (and are presently) less than + 0.2 inches WG, **REQUEST** permission from Shift Manager to perform the following;

- **ENTER** farm, **AND INVESTIGATE** cause of shutdown.
- **ATTEMPT** to RESTART primary ventilation system per TO-060-104.

[9] **IF** unable to clear alarm, **REQUEST** Shift Manager to verify compliance with LCO 3.2.1.

[10] **IF** any tank pressures have exceeded or presently exceed + 0.2 psig, **RESPOND** per appropriate alarm response procedure for High Pressure alarm (panels ANN-101 through ANN-106, Alarm 02, HI PRESSURE TANK 10X (LOW VACUUM), (WST-PAH-11X)).

[11] **SHUT DOWN** any operating airlift circulators in 241-AW-102 per TO-200-040.

(Continued on Next Page)

Facility: 241-AW-271 Building

RED

FAN FAILURE A & B TRAIN PRIMARY EXH (VTP-XA-310A)

04

(Continued)

Panel: ANN-AUX **Alarm #:** 04

Source: AW241-VTP-PDS-410
AW241-VTP-PDS-310

Setpoint: 1.25 inches WG

Possible Causes:

1. Mechanical failure of operating and standby fans.
2. Mechanical failure of operating fan combined with a sticking inlet MOV valve on standby system (most likely in cold weather).
3. High radiation level detected by exhaust stack CAM, shutting down the (K1) primary system through interlock.
4. HIGH/LOW DP detected across first or final stage HEPA filter respectively, PLC Failure, or Failure of DP instruments shutting down ventilation by interlock

References:

Drawings: H-2-90928, H-14-020102

Documents: HNF-SD-WM-TSR-006, Tank Farms Technical Safety Requirements
Procedure TO-060-104, Operate The 241-AW Primary Ventilation System
Procedure TO-200-040, Operate TK-102-AW Airlift Circulators
ARP-T-231-00102, Respond to Panel ANN-102 Alarms at 271-AW

Facility: 241-SY-271 Instrument Building

Panel: ANN-101-2 **Alarm #:** 02

Source: PDIT-210, 211, and 212 **Setpoint:** -0.3 inches WG

WHITE

HIGH PRESSURE TANK 101 (LOW VACUUM) (WST-PAHH-101)

(Continued)

Immediate Actions (Cont.):

[4] **CHECK** the status of the following annunciators:

- Panel B-3 ANN-103 alarm 04 HI D/P PRIMARY EXHAUST A TRAIN HEPA FILTERS (SY271-VTP-PDAH-442)
- Panel B-3 ANN-103 alarm 05 LOW D/P PRIMARY EXHAUST A TRAIN HEPA FILTERS (SY271-VTP-PDAL-443)
- Panel B-3 ANN-101 alarm 09 LOW D/P PRIMARY EXHAUST B TRAIN (SY271-VTP-PDAL-182B)
- Panel B-3 ANN-101 alarm 10 HIGH D/P PRIMARY EXHAUST B TRAIN (SY271-VTP-PDAH-180B)
- 242-S Evaporator Panel F alarm 4-2 HIGH RADIATION 241-SY PRIMARY EXH B TRAIN (VTP-RAH-624)
- Panel B-3 ANN-102 alarm 10 HIGH RAD ALARM PRIMARY EXHAUST B TRAIN (SY271-VTP-RAH-301B)
- ANN-102-2 alarm 02 High Pressure TANK 102 (LOW VACUUM) (WST-PAHH-102)
- ANN-103-2 alarm 02 High Pressure TANK 103 (LOW VACUUM) (WST-PAHH-103).

NOTE - The following readings (from steps [5] and [6]), taken from the instrument building and TMACS, are used in step [9] to determine if tank conditions are unstable (i.e., symptoms of a tank pressurization and/or gas release event). When the exhaust system is shut down, it is expected that tank pressure will go to zero. Pressure fluctuations of greater than plus or minus 0.2 inches WG indicate unstable conditions.

[5] **CHECK** the pressure at a MCS HMI Station or SY101-WST-PDIT-210, -211 or -212 to see if tank pressures have exceeded +0.2 inches WG or if there are fluctuations greater than plus or minus 0.2 inches WG.

(Continued on Next Page)

Facility: 241-SY-271 Instrument Building

Panel: ANN-101-2 **Alarm #:** 02

Source: PDIT-210, 211, and 212 **Setpoint:** -0.3 inches WG

WHITE

HIGH PRESSURE TANK 101 (LOW VACUUM) (WST-PAHH-101)

(Continued)

Immediate Actions (Cont.):

[6] **CONTACT** TMACS to determine if:

- Tank pressure has exceeded +0.2 inches WG or shows fluctuations greater than plus or minus 0.2 inches WG
- Tank waste level has changed more than 0.5 inches from recent trend information
- Tank temperature has changed more than 5 degrees from the recent trend information on individual thermocouples.

[7] **NOTIFY** the Shift Manager of conditions, **AND**

REQUEST Instrument Technician to silence alarm and Health Physics/Industrial Hygiene support.

[8] **REQUEST** Shift Manager evaluate the alarm and determine if entry into TSR actions is required and evaluate need to notify Environmental.

[9] **IF** the tank parameters indicate unstable conditions (meets the criteria listed above), **EVACUATE** all personnel from the farm to the change trailer, **AND** Health Physics Technician (HPT), Industrial Hygiene Technician and Operator **DON** appropriate personal protective equipment (self contained breathing apparatus (SCBA) and one set of protective clothing).

NOTE - Steps [10] and [11] may be performed concurrently.

[10] **IF** the primary tank exhaust system is not running, **AND**

IF the 242-S Evaporator panel F alarm 4-2 HIGH RADIATION 241-SY PRIMARY EXH A TRAIN (VTP-RAH-624) or the 4-4 HIGH RADIATION 241-SY PRIMARY EXH B TRAIN (VTP-RAH-301C) is NOT IN ALARM, **RESTART** the exhaust system per TO-060-235 or TO-060-245, as directed by the Shift Manager.

[11] **REQUEST** Health Physics Technician and Industrial Hygiene Technician to **PERFORM** assessments for radioactivity, ammonia and organics in the farm.

[12] **ENSURE** Farm is posted in accordance with IH recommendations.

[13] **PERFORM** a visual observation of the farm for indications of problems such as smoke, sparks, equipment that is obviously damaged or not operating properly.

(Continued on Next Page)

Facility: 241-SY-271 Instrument Building

Panel: ANN-101-2 **Alarm #:** 02

Source: PDIT-210, 211, and 212 **Setpoint:** -0.3 inches WG

WHITE

HIGH PRESSURE TANK 101 (LOW VACUUM) (WST-PAHH-101)

(Continued)

Immediate Actions (Cont.):

[14] **IF** visual observation of the farm shows evidence of a fire, **RECOMMEND** to Shift Manager response per TF-ERP-006.

[15] **IF** the Health Physics Technician reports a spread of contamination, **RECOMMEND** to Shift Manager response per TF-AOP-003.

Supplemental Actions:

[16] **MONITOR** previously indicated tank parameters until baseline values return.

[17] **NOTIFY** Shift Manager of all actions and findings.

Possible Causes:

1. Primary Exhauster has shut down.
2. Maintenance work on the High Pressure Alarm.
3. Dome intrusive work.
4. Open Riser, open pit drain and or missing sealing media on pit cover block(s), cracks, seams or penetrations that admit to much air to the Pit(s).
5. Failure of Pressure Transmitters.

References:

Drawings: H-14-020631

Documents: TO-060-235, Operate SY-241 B-Train Primary Ventilation System
TO-060-245, Operate SY241 A-Train Primary Ventilation System
TF-AOP-003, Response to Elevated Airborne Radioactivity
TF-ERP-006, Emergency Response Procedure 006 Facility Fire Response
HNF-SD-WM-TSR-006, Tank Farms Technical Safety Requirements
OSD-T-151-00007, Operating Specifications for the Double-Shell Storage Tanks

Attachment 11

List of ARPs to be reviewed by ARP Corrective Action Team:

1. ARP-T-221-EXH(A), Respond to A-Train Alarms at 241-AN VTP Exhaust Skid
2. ARP-T-221-EXH(B), Respond to B-Train Alarms at 241-AN VTP Exhaust Skid
3. ARP-T-231-EXH(A), Respond to A-Train Alarms at 241-AW VTP Exhaust Skid
4. ARP-T-231-EXH(B), Respond to A-Train Alarms at 241-AW VTP Exhaust Skid
5. ARP-T-431-00003, Respond to Alarms at SY-241 A-Train Primary Exhauster
6. ARP-T-431-00004, Respond to Alarms at SY-241 B-Train Primary Exhauster
7. ARP-T-431-00101, Respond to Alarms in the 241-SY Instrument Building
8. ARP-T-271-HVAC, Respond to HVAC Alarms at 271-AP
9. ARP-T-271-RM, Respond to Panel Radiation Monitor Alarms at 271-AP
10. ARP-T-251-00014, Respond to Monitor Control System Graphic #14 Chiller Alarms
11. ARP-T-251-00015, Respond to Monitor Control System Graphic #15 Primary Vent Alarms
12. ARP-T-251-00016, Respond to Monitor Control System Graphic #16 Primary Cooling Alarms
13. ARP-T-251-00017, Respond to Monitor Control System Graphic #17 Primary Exhaust Alarms
14. ARP-T-251-00018, Respond to Monitor Control System Graphic #18 Primary Vent Stack Alarms
15. ARP-T-251-00025, Respond to Monitor Control System Graphic #25 Exhaust Macro Alarms

222-S Laboratory
Laboratory Operating Procedure

222-S Laboratory Response to Contamination Detected in Laboratory Radiological Areas

Technical Authority: TS Kimmel **Review Designation: S,R,J,EP**

CONTENTS

1.0 PURPOSE AND SCOPE 3

2.0 REFERENCES 3

3.0 PRECAUTIONS AND LIMITATIONS 3

4.0 SPECIAL TOOLS, EQUIPMENT, AND MATERIALS 3

5.0 PREREQUISITES 4

6.0 INSTRUCTIONS 5
- 6.1 Upon discovery of contamination detected outside of fume hood or hot cells such as: 5
- 6.2 Perform radiological surveys in response to a Radiological Condition. 5
- 6.3 Evaluate radiological survey results 5
- 6.4 Perform investigative radiological surveys using a Job Specific RWP. 6
- 6.5 Evaluate results of investigative surveys and develope a recovery plan. 6

7.0 RECORDS 7

8.0 BIBLIOGRAPHY 7

222-S Laboratory
Laboratory Operating Procedure

222-S Laboratory Response to Contamination Detected in Laboratory Radiological Areas

Technical Authority: TS Kimmel **Review Designation: S,R,J,EP**

Revision Status

Change Level	Released for Training Date	Released for Use Date	Pages	Description
A-0	03/04/2009	03/10/2009	All	New procedure to provide a response to contamination detected in laboratory radiological areas

All trademarks and registered trademarks are the property of their respective owners.

1.0 PURPOSE AND SCOPE

This procedure provides direction to all 222-S personnel for response to contamination detected in laboratory radiological areas.

2.0 REFERENCES

ATS-310, *222-S Laboratory Administration*, Section 1.18, "Preparing Recovery Plan"

TF-RC-003, *Eberline Model RO-20 Ion Chamber Operation and Source Checks*

TF-RC-009, *GM Portable Survey Instrument Operation and Source Checks*

TF-RC-010, *Portable Alpha Meter (PAM) Operation and Source Checks*

TFC-ESHQ-RP_ARP-C-02, *Automated Personnel Monitor Alarm Response*

TFC-ESHQ-RP_ARP-P-04, *Continuous Air Monitor Alarm Response*

3.0 PRECAUTIONS AND LIMITATIONS

This procedure shall not be used to respond to an emergency condition. See the applicable Emergency Response Procedure (ERP) to respond.

If personnel or personal effects contamination occurs, implement ERP-222S-008, *Personnel Contamination.*

Refer to the applicable Tank Operations Contractor (TOC) procedure for an Automated Personnel Monitor (APM) or a Continuous Air Monitor (CAM) alarm.

This procedure does not authorize the user to continue working in areas where the applicable Radiological Work Permit (RWP) void limits have been exceeded.

Fall-back values should be determined by Facility Operations and Radiological Controls management and shall not exceed the void limits of the applicable RWP and normally will be set at the safe condition level.

Radiological posting signs

Survey materials

5.0 PREREQUISITES

None

6.0 INSTRUCTIONS

NOTES

- "Operations" refers to laboratory leader, counting room/surveillance technician, or other designated chemical technician.
- "Management" refers to a joint consensus between Operations and Radiological Controls (RC) management personnel.

6.1 Upon Discovery of Contamination Detected Outside of Fume Hood or Hot Cells Such As:

- Spread of contamination outside of laboratory fume hoods above RWP action levels
- Contamination detected as part of a personnel survey (e.g., hand and foot survey upon exit of the labs contamination area [CA]).

6.1.1 **REQUEST** assistance from Health Physics Technician(s) (HPT).

6.1.2 **NOTIFY** Operations of radiological condition.

6.1.3 (Operations) **ANNOUNCE** details of the radiological condition.

6.1.4 (Operations) **INSTRUCT** personnel to limit movement or orderly egress from areas when conditions warrant.

6.2 Perform Radiological Surveys in Response to a Radiological Condition

6.2.1 (Management) **BRIEF** the HPT responding to the radiological condition with the applicable fall-back levels and general survey plan.

6.2.2 (HPT) **PERFORM** radiological surveys of the affected area as directed by management.

6.2.3 (HPT) **REPORT** results of radiological surveys to management.

6.3 Evaluate Radiological Survey Results

6.3.1 (Management) **DETERMINE** a path forward based on the radiological survey results with one of the following scenarios:

2. (Operations) **ANNOUNCE** that normal operations may resume.

b. **IF** results are above action levels, **SUSPEND** normal operations.

1. **PROVIDE** a means for personnel in affected areas to exit.

2. (Operations) **MAKE** announcement to perform orderly egress from affected areas.

3. (Operations) **POST** all entrances/exits to the affected areas as directed by management.

4. (Operations) **UPDATE** the 222-S status board in room 3B with the current posting status.

6.4 Perform Investigative Radiological Surveys using a Job-Specific RWP

6.4.1 (Management) **BRIEF** HPT performing investigative radiological surveys with the requirements of the job-specific RWP.

6.4.2 (HPT) **PERFORM** investigative radiological surveys as directed by management.

6.4.3 (HPT) **REPORT** results of investigative radiological surveys to management.

6.5 Evaluate Results of Investigative Surveys and Develop a Recovery Plan

6.5.1 (Management) **DETERMINE** a path forward based on the radiological survey results with one of the following scenarios:

a. **DEVELOP** a recovery plan for an individual area determined to be above the area's applicable RWP safe condition levels.

b. **DEVELOP** a recovery plan for an expanded area if more than two separate locations have been determined to be above the area's applicable RWP safe condition levels.

c. **CONSIDER** developing a recovery plan for an expanded area if multiple locations have been determined to be above the area's applicable RWP action levels.

7.0 RECORDS

NOTE

The Hanford Site remains under a full moratorium on the destruction of record material until further notice.

The following records are generated by this procedure.

Record Description	Vital Record Y/N	QA Record Y/N	QA Record Retention L/NP	NARA Retention Schedule	Other Retention Requirements	Records Custodian
Radiological Survey Report (BD-6003-343 or equivalent form)	Y[a]	N	L	Y[a]	NA	Rad Con Manager
[a] Records resulting from other procedures						

These records are handled and maintained in accordance with applicable company records, management standards, and procedures. They will be included on appropriate information inventories and recorded on an approved Records Inventory and Disposition Schedule (RIDS) form.

8.0 BIBLIOGRAPHY

10 CFR 835, *Occupational Radiation Protection*

HNF-5183, *Tank Farm Radiological Control Manual*

HNF-MP-5184, *Radiation Protection Program*

☑ Option 03 Industrial Hygiene Technician - Core Training Requirements, Individual performs duties as an IHT for for the Tank Operations Contractor Notes: 1. Continuing Training Cycles are added and removed for scheduling purposes and should not be considered for initial qualification. 2. The IHT training requirements were modified on 2/10/2009 for new retrain frequencies. Personnel qualified (350292) prior to 2/10/09 are still qualified to perform their IHT duties but must complete the continuing training requirements prior to 5/11/2009 or when their two year cycle ends whichever is later.

00311I HANFORD SITE LOCKOUT/TAGOUT FOR AUTHORIZED WORKER - INITIAL
020130 CONFINED SPACE ENTRY (CSE)
020147 FALL HAZARD RECOGNITION AND PREVENTION
020193 HEAT STRESS TRAINING - CBT
020194 HEARING CONSERVATION - CBT
350217 ERGONOMICS 201 - USING ERGONOMIC ASSESSMENT TOOLS
350292 TFC INDUSTRIAL HYGIENE TECHNICIAN QUALIFICATION
350809 TFC LADDER SAFETY - CBT
350853 TFC SCAFFOLD USER SAFETY - CBT
350933 SAFETY BASIS TRAINING
357106 CYCLE 2 IHT INSTRUMENT CONTINUING TRAINING
357884 CH2M HILL INDUSTRIAL HEALTH TECHNICIAN FUNDAMENTALS
35E001 TFC EMERGENCY RESPONSE ORGANIZATION FACILITY SPECIFIC INITIAL TRAINING

Added this in mid Jan 09

35E001 **TOC ERO Class** **IHT Status** 3/13/2009

DEPTID	EMPLOYEE	JOBTITLE	MANAGER	TAKEN	SCHEDULED
TFG10000	Acob Jr,Jose	Q-IHT	Hughey,Markis T	1/19/2009	
TFG10000	Garner,Brett A	IHT	Hughey,Markis T	1/19/2009	
TFG10000	Irvin,Ronald L	P-IHT	Hughey,Markis T	1/19/2009	
TFG10000	Kenworthy,Tracy A	P-IHT	Hughey,Markis T	1/19/2009	
TFG10000	Bughi,Kevan D	Q-IHT	Hughey,Markis T	1/20/2009	
TFG10000	Harding,Ronald A	IHT	Hughey,Markis T	1/20/2009	
TFG10000	Jones,Kenneth L	IHT	Hughey,Markis T	1/20/2009	
TFG10000	Payne,Joseph A	IHT	Hughey,Markis T	1/20/2009	
TFG10000	Spaulding,Dell F	IHT	Hughey,Markis T	1/20/2009	
TFG10000	Tole,James S	P-IHT	Hughey,Markis T	1/20/2009	
TFG10000	Urie,Michael J	IHT	Hughey,Markis T	1/20/2009	
TFG10000	Junt,Kasey Q	IHT - Lead	Hughey,Markis T	2/4/2009	
TBB20000	McKinney,John E	IHT	Jones,Mark W	2/4/2009	
TED21000	Cleveland,Evan D	IHT	Randles,Jason J		3/12/2009
TED21000	Brunson,Jeffrey R	IHT	Randles,Jason J	1/19/2009	
TED21000	Eilertsen,Ronald V	Q-IHT	Randles,Jason J	1/19/2009	
TED21000	Woodcock,Michael T	IHT	Randles,Jason J	1/19/2009	
TED21000	Graham,Roy D	IHT	Randles,Jason J	1/20/2009	
TED21000	Gustafson,Kevin A	IHT	Randles,Jason J	1/20/2009	
TBB20000	O'Neal,M L	IHT	Randles,Jason J	1/20/2009	
TED21000	Perkes,Randall S	IHT	Randles,Jason J	1/20/2009	
TED21000	Sant,Steven J	IHT	Randles,Jason J	1/20/2009	
TBB20000	Spicer,Ronald A	IHT	Randles,Jason J	1/20/2009	
TED21000	Sullivan,William J	IHT	Randles,Jason J	1/20/2009	
TED21000	Rohner,Janet J	B-IHT-Don't schedule tues	Randles,Jason J	2/2/2009	
TED21000	Higbee,Kirk R	IHT	Randles,Jason J	2/4/2009	
TED21000	Horner,Randell L	IHT	Randles,Jason J	2/4/2009	
TED21000	Laws,Alan S	IHT	Randles,Jason J	2/4/2009	
TED20000	Hollis,Christopher N	STD-B-IHT-Don't schedule tues	Roueche,Kimberly A	2/5/2008	
TED20000	Wilhelm,Alan J	A-IHT-Don't schedule tues	Roueche,Kimberly A	1/14/2009	
TED20000	Woods,Tom T	D-IHT-Don't schedule tues	Roueche,Kimberly A	1/19/2009	
TED20000	Newcomb,Kevin L	C-IHT-Don't schedule tues	Roueche,Kimberly A	1/28/2009	

ROOT AND COMMON CAUSE ANALYSIS

WASHINGTON RIVER PROTECTIONS SOLUTIONS LLC
RESPONSE TO ABNORMAL EVENTS
SURVEILLANCE S-09-ESQ-TANKFARM-003

MARCH 2009

Root and Common Cause Analysis Report
WRPS-PER-2009-0385

Date March 31, 2009

Team Lead: G.N. Hanson for NJM Date: 4/2/09
N. J. Milliken

Responsible Manager: Date: 4/6/09
R. Gregory

ESRB for Date: 4/6/9
W. J. Johnson

ROOT AND COMMON CAUSE ANALYSIS

WASHINGTON RIVER PROTECTIONS SOLUTIONS LLC
RESPONSE TO ABNORMAL EVENTS
SURVEILLANCE S-09-ESQ-TANKFARM-003

Root and Common Analysis Team:

Nancy Milliken	Team Lead, Base Operations Technical Support
Rich Allen	Security and Emergency Services/Event Investigation
Mark Garrett	Base Operations Shift Operations
Keith Gray	Single Shell Tank Radiological Control
Beth Mata	Base Operations Technical Support
Don White	222-S Lab Support Services

Technical Points of Contact:

Eric Bickel	Base Operations Radiological Control
Rob Gregory	Base Operations
Sandy Hyman	Environmental, Safety, Health and Quality Business Operations
Mark Jones	Safety and Health Industrial Hygiene
Kim Roueche	Base Operations Industrial Safety and Hygiene

ROOT AND COMMON CAUSE ANALYSIS

WASHINGTON RIVER PROTECTIONS SOLUTIONS LLC
RESPONSE TO ABNORMAL EVENTS
SURVEILLANCE S-09-ESQ-TANKFARM-003

Table of Contents

1.0 EXECUTIVE SUMMARY 4
2.0 CONCERN S-09-ESQ-TANKFARM-003-C01 4
3.0 FINDING S-09-ESQ-TANKFARM-003-F01 10
4.0 FINDING S-09-ESQ-TANKFARM-003-F02 14
5.0 FINDING S-09-ESQ-TANKFARM-003-F03 18
6.0 FINDING S-09-ESQ-TANKFARM-003-F04 24
7.0 FINDING S-09-ESQ-TANKFARM-003-F05 27
8.0 FINDING S-09-ESQ-TANKFARM-003-F06 35
9.0 LESSONS LEARNED 38
10.0 END POINT ASSESSMENT 39

Attachments

ATTACHMENT A – Common Cause Analysis Report 40
ATTACHMENT B – Event and Causal Factor Analysis 58

ROOT AND COMMON CAUSE ANALYSIS

WASHINGTON RIVER PROTECTIONS SOLUTIONS LLC
RESPONSE TO ABNORMAL EVENTS
SURVEILLANCE S-09-ESQ-TANKFARM-003

1.0 EXECUTIVE SUMMARY

This report provides the results of the root and common cause analysis (CCA) performed to address the Concern and Findings contained in WRPS-0900518, "Contract NO. DE-AC27-08RV14800 – Washington River Protection Solutions LLC (WRPS) Response to Abnormal Events Surveillance S-09-ESQ-TANKFARM-003," documented in WRPS-PER-2009-0385, "Results of DOE Surveillance of WRPS Response to Abnormal Events." Root and common cause analysis were conducted utilizing a series of techniques as prescribed in TFC-ESHQ-Q_ADM-C-11, "Root and Common Cause Analysis and Corrective Action Planning."

The root and common cause analysis identified three common causes associated with the six findings and one concern. These were then evaluated against corrective action plans and corrective actions taken in response to the six individual findings listed in the surveillance report to determine their adequacy and to note additional improvement opportunities. As a result, a negative determination was made that the event causal factors were being addressed to prevent recurrence, resulting in three judgments of need being identified. These include:

1. Reestablish a culture committed to procedural compliance, conservative decision making, and questioning attitude
2. Perform procedure reviews for consistency and perform field observations to ensure procedure compliance and effective communications
3. Strengthen training and qualification requirements relied upon to implement expectations

Although no actual adverse impacts to personnel or the environment occurred as a result of these incidents, the potential exists. A questioning attitude and conservative decision making mentality is imperative to a healthy safety culture within the Tank Operations Contractor (TOC).

2.0 CONCERN S-09-ESQ-TANKFARM-003-C01

2.1 PROBLEM STATEMENT

Weakness in Emergency Response Program implementation is indicated based on several instances in which WRPS Base Operations and 222-S Laboratory management team did not implement approved abnormal response procedures following indications of abnormal operating conditions.

2.2 BACKGROUND

The surveillance was performed to evaluate WRPS response to indications of abnormal events since assuming responsibility for operation of the Tank Farms and 222-S Laboratory. The surveillance team evaluated WRPS response to abnormal events from the period October 1, 2008 through December 31, 2008.

The U. S. Department of Energy, Office of River Protection (DOE-ORP) expressed concern that the TOC has not implemented a culture where management and supervisory personnel believe observed or reported abnormal indications, and provide protection to workers and/or equipment until indications are validated or proven wrong. The ORP also expressed concern that WRPS did not self-identify some examples of deficiencies. The surveillance resulted in one concern and six supporting findings.

A root cause analysis was performed individually for each of the six findings. The analyses were performed to define the most basic causes that explain why the event occurred, provide recommendations to remedy the problems, and prevent recurrence of the problems. The individual Root Cause Analyses were then evaluated using a common cause analysis (CCA) approach to characterize symptoms of organization and programmatic issues as well as human errors.

The CCA identified three common causes associated with the findings and one concern. These were then evaluated against corrective action plans and actions taken in response to the six individual findings listed in the surveillance report to determine their adequacy and to note additional improvement opportunities. As a result, a negative determination was made that the event causal factors were being addressed to prevent recurrence, resulting in three judgments of need being identified. These include:

1. Reestablish a culture committed to procedural compliance, conservative decision making, and questioning attitude
2. Perform procedure reviews for consistency and perform field observations to ensure procedure compliance and effective communications
3. Strengthen training and qualification requirements relied upon to implement expectations

These opportunities were captured in the corrective actions established as a result of this CCA and in many cases form the acceptance criteria for the actions specified.

2.3 CAUSE STATEMENT

The CCA identified three common causes that were apparent in the six findings and one concern reviewed. Personnel errors coupled with insufficient supervision to reinforce

expectations were primary contributors to these events. Communication problems, training deficiencies, as well as management expectations regarding procedural compliance, should be addressed.

Common Cause 1 – Hazards Control requirements have not been completely effective in ensuring identified hazards are adequately mitigated to support the performance of work within an acceptable safety envelope.

Common Cause 2 – Generalization of work instructions does not ensure that hazards are controlled as needed to maintain an appropriate safety envelope for the performance of work.

Common Cause 3 – Event related breakdowns in communication reflect a common weakness in training and qualification relied upon to implement expectations.

The top three causal codes (A-nodes) are displayed from the root cause data provided from the analysis of the findings. The chart below illustrates a concentration in the areas of *Human Performance (A3), Management Problem (A4),* and *Communication (A5)* fields contained all of the coding.

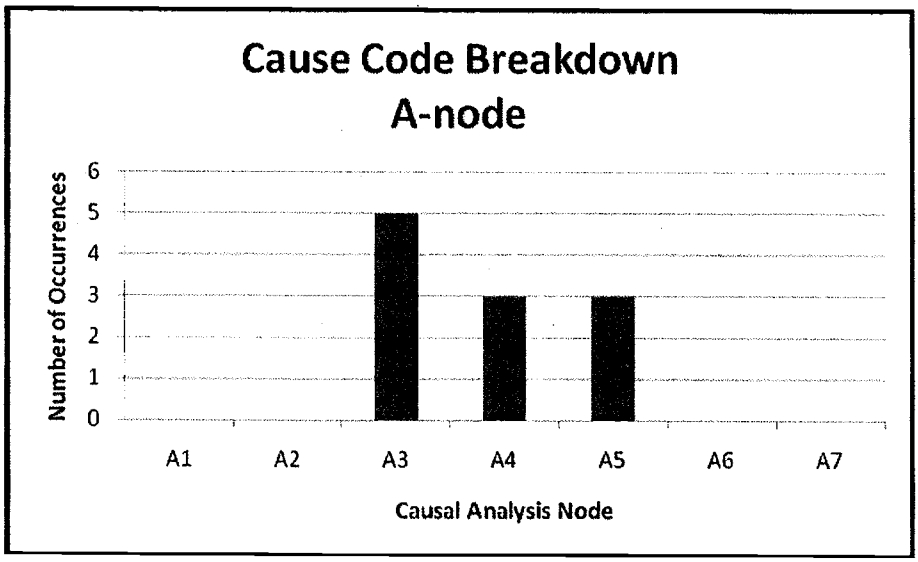

Additional detailed review was performed to determine the relationship of the causal codes to ISMS Core Function. As demonstrated below for the events evaluated, the weaknesses occur in *Develop and Implement Hazard Controls, Perform Work within Controls,* and *Provide Feedback and Continuous Improvement.*

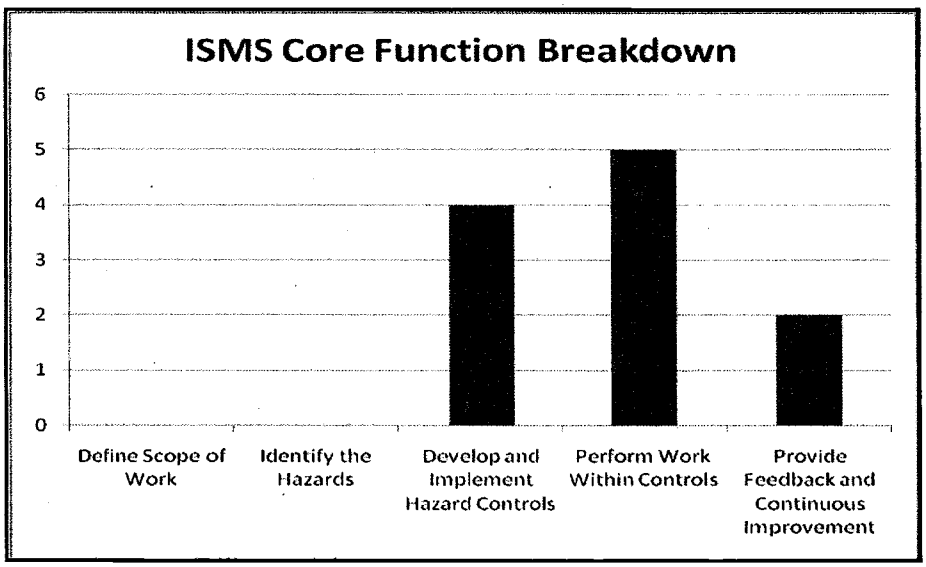

In conclusion, this review demonstrates the transportability of this coding beyond those identified to response actions for other events.

2.4 EXTENT OF CONDITION

Weaknesses in WRPS response to abnormal conditions are evident based on the findings cited in this report. Additionally, a search of the River Protection Project (RPP) Lessons Learned database revealed 29 reports containing key word "conservative decision."

2.5 GENERIC IMPLICATIONS

Failure to address the common causes identified for this event could lead to programmatic failures and could cause lasting and costly effects to WRPS.

2.6 SAFETY SIGNIFICANCE

Although no actual adverse impacts to personnel or the environment occurred as a result of these incidents, the potential exists. A questioning attitude and conservative decision making mentality is imperative to a healthy safety culture within the TOC.

2.7 RECOMMENDED CORRECTIVE ACTIONS

The three common causes and Judgments of Need can be addressed by the following corrective actions. An end point assessment is required approximately six-months following the completion of all corrective actions.

CC-01	Complete a review of Double-Shell Tank Pressurization related Alarm Response Procedures (ARPs), Abnormal Operating Procedures (AOPs), and Emergency Response Procedures (ERPs). Revise as necessary to ensure consistency in response actions and level of controls.
Actionee:	P. Owen
Due Date:	5/15/09
Deliverable:	Copy of evaluation and revised procedures as necessary.

CC-02	Clarify roles and responsibilities for Industrial Hygiene management within Operations to clearly identify chain of command structure during abnormal and emergency events.
Actionee:	K. Roueche
Due Date:	4/24/09
Deliverable:	Copy of communications material and course completion rosters .

CC-03	Provide face-to-face briefings to reiterate the expectations for Tank Farm, 222-S, and SST Retrieval and Closure personnel for timely identification and evaluation of conditions adverse to quality, safety, health, operability, and the environment (as required by TFC-ESHQ-Q_C-C-01, "Problem Evaluation Request.") Also include expectations on the importance of a questioning attitude, conservative decision making, procedure compliance, and formal communications.
Actionee:	N. Brosee
Due Date:	5/27/09
Deliverable:	Summary of briefing material and course completion rosters.

CC-04	Update operator continuing training material to include Human Performance Initiative (HPI) training.
Actionee:	L. Keith
Due Date:	7/31/09
Deliverable:	Copy of updated operator continuing training material.

CC-05	Reinforce the requirement for Shift Operations to perform one table-top drill per shift per month. The table-top drill should involve Shift personnel (Nuclear Chemical Operators (NCOs), Health Physics Technicians (HPTs), and Industrial Hygiene Technicians (IHTs), as available) and consider "what-if" situations. Scenarios to evaluate should include review of Alarm Response Procedures (ARPs), Abnormal Operating Procedures (AOPs)and Emergency Response Procedures (ERPs). Communicate expectations to Shift Managers.
Actionee:	P. Owen
Due Date:	4/24/09
Deliverable:	Issued memo of expectationsto Shift Managers and tickler (see TF-OPS-OPER-CD-30) for reminder.

CC-06	Perform at least six WRPS senior management oversight observations of table-top drills to monitor and ensure effectiveness. Continue oversight until satisfactory performance is achieved.
Actionee:	R. Gregory
Due Date:	7/30/09
Deliverable:	Document observations on MOP form.

CC-07	Re-emphasize an aggressive Management Observation Program (MOP) to continually perform management oversight and encourage routine feedback. Focus areas should include Conduct of Operations, Radiological Control Operations, alarm response and table-top drills.
Actionee:	N. Brosee
Due Date:	4/24/09
Deliverable:	Issued memo of expectations to MOP designated personnel.

Compensatory Measures:

Compensatory measures were considered/invoked at the time each individual event occurred. In addition, as a process improvement initiative the Radiological Control organization has increased the number of Radiological Control Supervisors in efforts to more effectively monitor and control work.

Also, a Conduct of Operations Council (COOC) was established on March 24, 2009. This council is the governing body for promoting continuous improvement in Conduct of Operations for the TOC. Goals of the COOC are to: 1) promote excellence and continuous improvement in Con Ops (including Radiological Practices), 2) implement process changes that integrate Con Ops, human performance initiative (HPI), and Integrated Environment, Safety and Health Management System (ISMS), and 3) provide oversight and direction for company-wide Conduct of Operations and HPI related activities, guidelines, priorities, monitoring, overall program effectiveness, communication, and lessons learned.

2.8 PROBLEM ANALYSIS

WRPS agrees with the concern. Weaknesses in the response to abnormal events are evident as documented in the six findings. Strict procedural compliance and a questioning attitude coupled with conservative decision making is imperative to a healthy safety culture within the TOC. Efforts to communicate management expectations, improve communications, continued management oversight, provide continuous feedback, and understand human error traps will assist WRPS operational performance.

2.9 TIMELINE

No timeline was warranted for the common cause analysis.

3.0 FINDING S-09-ESQ-TANKFARM-003-F01

3.1 PROBLEM STATEMENT

Alarm response procedures (ARPs) for Tank High Pressure alarm were not utilized for AW Tank Farm high pressure alarms as required.

3.2 BACKGROUND

On October 15, 2008, at approximately 1420 hours, while performing routine maintenance in 241-AW Tank Farm the primary exhauster shutdown. Audible and visual tank pressurization alarms were received for all tanks on the respective tank alarm panels in 271-AW and the associated horn outside.

Alarm Response Procedures ARP-T-231-101 through 106 are the ARPs that provide direction for response to alarms associated with the respective tanks, including tank high pressure alarms. All tank high pressure alarms activated as expected due to primary fan shut

down. This required entry into the six tank high pressure alarm procedures found in the above mentioned ARPs.

Steps 1 through 12 (of 14) were completed in all associated ARPs. Step 13 requires Health Physics Technician (HPT) and Industrial Hygiene Technician (IHT) to perform assessments for radioactivity and organics and ammonia, respectively. The IHT donned self-contained breathing apparatus (SCBA) in accordance with Tank Vapor Information Sheet (TVIS) requirements and performed organic and ammonia surveys in 241-AW. The IHT completed the assessment and determined organic and ammonia field indications were normal and notified the Base Operations Shift Manager (BOSM). The BOSM released the farm of vapor controls (established by the BOSM in Step 9 of the ARPs).

The BOSM believed farm sweeps had been completed by the HPTs supporting maintenance at 241-AW at the time of the event. Although he did not receive or solicit confirmation from the HPTs, he assumed they would have performed that task because it has always been performed subsequent to restarting an exhauster. The following day, the oncoming Shift Manager discovered the sweep had not been performed as required and the HPT survey was completed the next morning.

[Note: ARP-T-231-AUX provides alarm response actions for disconnected ventilation systems at 241-AW. The fan failure alarm referenced in subject finding description does not activate upon fan failure of the currently operating fans.]

3.3 CAUSE STATEMENT

This event was a result of less than adequate human performance in failing to take appropriate actions based on the assumptions and a failure to follow-up to ensure that actions were taken.

Root Cause: The root causes of this event were determined to be:

> RC-01-01 – A3B1C07 – Human Performance Less Than Adequate (LTA) / Skill Based Error / Omission/repeating of steps due to assumption for completion.
>
> RC-01-02 – A4B1C04 – Management Problem / Management Methods LTA / Management follow-up of monitoring of activities did not identify problems.
>
> Based on past practice, the BOSM assumed that HPTs supporting maintenance activities would perform a sweep of the farm. The BOSM failed to actively follow-up with maintenance personnel and HPTs to ensure a sweep of the farm was performed.

Direct Cause: The direct cause of this event was determined to be:

> DC-01-01 – A3B1C07 – Human Performance LTA / Skill Based Error / Omission/repeating of steps due to assumptions for completion.
>
> A step in the ARPs was not performed because the BOSM assumed it had been completed.

3.4 EXTENT OF CONDITION

A review of past problem evaluation requests (PERs) indicates no adverse trends of these causal factors. A review of thirty-four (34) Double Shell Tank (DST) ARPs indicated inconsistencies between ARPs. Although this inconsistency between ARPs did not contribute to this event, the inconsistencies could lead to future human errors.

3.5 GENERIC IMPLICATIONS

A fact finding meeting was held to review inconsistent responses to five ventilation shut down events that occurred over an eight-day period. It was determined that the ARPs for primary ventilation outages are not consistent between the various tank farms. Corrective actions were implemented to review all ARPs associated with tank high pressure alarms and fan failures and ensure they are consistent across DST facilities.

3.6 SAFETY SIGNIFICANCE

It is highly unlikely that radiological conditions would change in working areas of 241-AW Tank Farm as a result of a primary ventilation shut down lasting approximately 30 minutes. Multiple radiological surveys have been performed at all tank farms for primary ventilation outages lasting weeks and months without detecting fugitive radioactive emissions.

3.7 RECOMMENDED CORRECTIVE ACTIONS

Corrective Actions:

The following corrective actions address the root causes:

CATPR-01-01	Ensure shift managers are briefed on revised ARPs, AOPs, and ERPs in conjunction with CC-01.
Actionee:	P. Owen
Due Date:	6/30/09
Deliverable:	Copy of briefing material and course completion rosters.

CATPR-01-02	Ensure shift managers are briefed on the importance of 3-way communication including complete directions, repeat back, and acknowledgement.
Actionee:	P. Owen
Due Date:	5/24/09
Deliverable:	Copy of briefing material and course completion rosters.

The following corrective action addresses the direct cause:

The direct cause was addressed via Shift Instructions issued October 17, 2008 (see compensatory measures below).

The following corrective action is required to complete the Extent of Condition review, and resolve the Extent of Condition and Generic Implications identified:

CC-01 will address the Extent of Condition and Generic Implications.

Compensatory Measures:

Shift Managers were provided the following Shift Instructions on October 17, 2008 by the Shift Operations Manager: "Review the Alarm Response Procedures (ARPs) associated with a loss of primary ventilation in each tank farm. Remember, there may be several alarms as a result of a loss of primary ventilation. Ensure all of the required actions for each valid alarm are completed. Additionally, before restoring general access to the affected farm, ensure that the farm has been surveyed/monitored/swept by both an IHT AND an HPT. Brief your shift personnel on these requirements so that they know to review all applicable ARPs on a loss of primary ventilation."

Measures to be taken to lift the compensatory action:

CA-01-02 - All shift managers complete review of Shift Instructions provided by Shift Operations Manager and initial Shift Instruction when review is complete.

Status: Completed October 17, 2008.

Remedial Corrective Actions:

CA-01-01 - The 241-AW Tank Farm was surveyed for radiological conditions upon discovery the survey had not been performed the day previously. No change in conditions were discovered.

Status: Completed October 16, 2008.
Effectiveness: No change in radiological conditions were detected.

Corrective Actions to Prevent Recurrence:

Actions taken to address the root cause will prevent recurrence.

3.8 PROBLEM ANALYSIS

The ORP finding is accurate. Not all steps of the effected ARPs were taken at the time of the event.

3.9 TIMELINE

An events and causal factors chart is included in Attachment B.

4.0 FINDING S-09-ESQ-TANKFARM-003-F02

4.1 PROBLEM STATEMENT

Abnormal operating procedure immediate actions were not taken for elevated airborne radioactivity levels identified during decontamination activities at the 204-AR decontamination facility.

4.2 BACKGROUND

On November 17, 2008, a Washington River Protection Solutions LLC (WRPS) work crew in 204-AR was performing decontamination activities on a camera used for in-tank viewing. The camera was enclosed in a glove bag and a breathing air sample was taken to validate the

integrity of the containment. Results of the field count (188 derived air concentration (DAC) alpha, greater than the 0.2 DAC action level) should have required the area be posted as an Airborne Radioactivity Area (ARA) and access be controlled. The results of the field count were conveyed to the Radiological Control First Line Supervisor (FLM). The Radiological Control FLM assumed the elevated airborne levels to be radon, therefore, did not post the area as an ARA, control access to the area, or notify the Shift Manager. Additionally, an entry was not placed in the Radiological Control logbook identifying the elevated air sample readings.

On November 18, 2008, a WRPS Health Physics Technician (HPT) was assigned to perform daily required surveillances in 204-AR. The HPT was not given information on the air sample data obtained the day before nor was the HPT required to wear respiratory protection. The HPT entered 204-AR at 0805 to perform their assigned surveillance.

A decay count of the air sample performed on November 17, 2008 was completed the morning of November 18, 2008, approximately 19 hours following the initial count. The results of the air sample showed that the alpha activity was still greater than the posting requirements of 0.2 DAC. The Radiological Control FLM then contacted the Base Operations Health Physicist (HP) to discuss the elevated air sample readings. The HP informed the FLM that the area should have been posted and controlled as an ARA on November 17, 2008 following the initial count indicating high alpha airborne activity.

Following this conversation, the FLM notified the Shift Office (0853) that they were posting the building as an ARA. They then notified the HPT (0855) assigned to perform routine surveillances in the building to exit the area. Subsequent nasal smears, in-vitro analysis, and a whole body count (WBC) were performed. Results from these procedures indicated no uptake of radioactive material had occurred.

The air sample was then sent to the count room for isotopic analysis. Results of the analysis, in fact, did validate the assumption of the FLM that radon was the cause of the elevated airborne contamination levels in the building.

Entry conditions of TF-AOP-003, "Response to Elevated Airborne Radioactivity," had been met, however, the Shift Operations Manager did not enter into the Abnormal Operating Procedure (AOP). Failure of entering into this AOP resulted in a failure to complete all required immediate actions of the procedure (e.g., stop work, isolate the area, etc.).

4.3 CAUSE STATEMENT

This event was a result of less than adequate human performance in failing to recognize the importance of the job indicators (instrumentation) available and applying other indicators

(assumptions) to select an improper course of action (i.e., non-implementation of TF-AOP-003).

Root Cause: The root cause for this event was determined to be:

RC-02-01 – A5B2C08 - Communications Less Than Adequate (LTA) / Written Communication Content LTA / Incomplete/Situation Not Covered.

Procedural requirements provided opportunities for not reporting elevated air sample results to the Shift Office when they are identified and not controlling the area. TFC-ESHQ-RP_MON-P-09, "Grab Air Sampling," allows the HPT to perform a preliminary assessment of an air sample. Upon completion of this assessment, there is no guidance to perform actions to mitigate the area if greater than allowable results are obtained. Notification to the Radiological Control FLM of these sample results occur several steps later in the procedure which could lead to delays in reporting abnormal levels. This procedure also does not contain a requirement for the Radiological Control FLM, once notified, to report high levels of airborne radioactivity to the Shift Office such that entry into AOP can occur.

Direct Cause: The direct cause of this event was determined to be:

DC-02-01 – A3B3C05 - Human Performance LTA / Knowledge Base Error / Incorrect assumption that a correlation existed between two or more facts.

Upon being notified of the higher than allowable airborne activity level by the HPT, the Radiological Control FLM did not report high airborne activity to the Shift Office due to the assumption that the elevated readings indicated radon presence. Nor, were steps taken by either the HPT or the Radiological FLM to post the area or confirm the cause of the elevated reading to be radon prior to the performance of routine surveillances in the facility the next day.

Contributing Cause:

No contributing cause was identified.

4.4 EXTENT OF CONDITION

A search of the Problem Evaluation Request (PER) database was conducted using the consequence codes applied to WRPS-PER-2008-0269; no records were returned in this search. Discussions with Base Operations Radiological Control personnel could not identify any similar events within the past "few" years. The last known similar event took place greater then five years ago where an elevated air sample was believed to be radon and later

found to be associated with a workplace event involving the spread of airborne contamination. The events are similar in that both areas were not controlled as the air sample was believed to be radon.

4.5 GENERIC IMPLICATIONS

Improper posting of radiological areas to identify actual conditions could lead to unnecessary personnel exposures.

4.6 SAFETY SIGNIFICANCE

Not entering into the AOP for response to elevated airborne contamination levels could result in a potential uptake of radioactivity by personnel.

4.7 RECOMMENDED CORRECTIVE ACTIONS

Corrective Actions:

The following corrective action addresses the root cause:

CATPR-02-01	Review and update TFC-ESHQ-RP_MON-P-09, "Grab Air Sampling," to include immediate actions and notification to the Shift Office of preliminary analysis identifying high airborne contamination levels.
Actionee:	J. Rolph
Due Date:	4/24/09
Deliverable:	Copy of revised procedure.

The following corrective action addresses the direct cause:

DC-02-01	Provide briefing to HPTs and Radiological Control FLMs on this event and procedural changes made in action CATPR-02-01.
Actionee:	B. Brannan
Due Date:	5/30/09
Deliverable:	Copy of briefing material and course completion roster.

Compensatory Measures:

An appropriate level of Progressive Performance Management (PPM) was applied at the time of the event.

Remedial Corrective Actions:

Following discussions with the HP, the area was immediately posted. The HPT who was in the area performing routine surveillances had nasal smears performed and was sent to the whole body counter for analysis. All in vitro and WBC analysis identified no uptake of radioactivity.

Corrective Actions to Prevent Recurrence:

Actions taken to address the root cause will prevent recurrence.

4.8 PROBLEM ANALYSIS

The ORP finding is accurate. Current procedural requirements for control of areas following the identification of an elevated air sample are contained in TF-AOP-003. Interviews with Base Operations Radiological Control personnel associated with this event indicate that TF-AOP-003 requirements are generally well understood. However, the root cause analysis team has determined that errors made by the Radiological Control FLM and occurring in TFC-ESHQ-RP_MON-P-09, "Grab Air Sampling," precluded entry into the AOP by the Shift Manager. Work was being performed by the HPT in accordance with TFC-ESHQ-RP_MON-P-09, which provides instructions for the HPT in the performance of grab air samples. It does not provide instructions that would drive the Radiological Control FLM to notify the Shift Office of elevated airborne radioactivity, nor does it provide instructions to immediately control the area.

4.9 TIMELINE

An events and causal factors chart is provided.

5.0 FINDING S-09-ESQ-TANKFARM-003-F03

5.1 PROBLEM STATEMENT

Immediate and follow-up actions contained in ERP-222S-009, "Spill/Release/Continuous Air Monitor Alarm," were not initiated or completed for a spill of radioactive material at 222-S Laboratories.

5.2 BACKGROUND

The ORP surveillance report noted the following chronology as background for the Finding S-09-ESQ-TANKFARM-003-F03:

At approximately 1500 hours on November 21, 2008, a Chemical Technician Manager was found with approximately 8,000 to 10,000 dpm/100 cm^2 beta-gamma and less than detectable alpha loose contamination on his anti-contamination shoe covers while exiting the posted Contamination Area at 222-S Laboratory. A responding RCT found approximately 8,000 to 10,000 dpm/100 cm^2 beta-gamma and less than detectable alpha loose contamination on the floor in the area where the Chemical Technician Manager had traversed. These work areas, although posted as Contamination Areas, are normally maintained free of loose contamination.

Facility management allowed routine surveillances using General Radiological Work Permits to continue over the weekend (November 21 through 23, 2008). Personnel conducting routine surveillances used a "smear and clear" method of entry into the contaminated area. Contamination levels of 8,000 to 10,000 dpm/100 cm^2 beta-gamma and less than detectable alpha loose contamination were found throughout the facility, including lab rooms and hallways normally maintained free of loose contamination. On Saturday, November 22, 2008, 150,000 dpm loose beta-gamma contamination was found on computer label on a cart in Room 2B. Workers and Radiological Control supervision did not consider the General Radiological Work Permits to be voided, because the levels of contamination exceeding the 20,000 dpm/100 cm^2 void limit found to date were not "general area" and were only present in specific locations in Room 2B.

On Sunday, November 23, 2008, personnel were called out on overtime to survey and decontaminate additional portions of the lab. In general, reported contamination levels remained at approximately 8,000 to 10,000 dpm/100 cm^2 beta-gamma and less than detectable alpha loose contamination throughout the facility. However, upon entering Room 2B3, the workers found 50k dpm/large area wipe (LAW) in the middle of the room in 2B2, and 25K dpm/100 cm^2 on the floor around hood 2.

Contrary to the 222-S Laboratory spill response procedure, after a contamination spread was identified, work (routine surveillances) was allowed to continue over the weekend (November 21 through 23, 2008) without stopping the spill or determining the cause or source of the spill. (Note: the source or cause has not yet been determined.) Not until November 25, 2008, was a Recovery Plan developed and implemented.

5.3 CAUSE STATEMENT

Root Cause: The root cause for this event was determined to be:

RC-03-01 - A5B2C07 - Communications LTA / Written Communication Content LTA / Facts wrong/requirements not correct.

Evaluation determined that initiating conditions in ERP-222S-009 do not accurately identify the intended entry criteria within the procedure. The entry criteria includes "...contamination spread has been identified during operations, radiological surveillance, continuous air monitor (CAM) alarm, PCM2 alarm, or self-survey." This criterion has been interpreted as being limited to a spread of contamination caused by an initiating emergency situation; contamination outside of a contamination area; or contamination levels exceeding the safe condition levels of the RWP, rather than a broader interpretation of being any contamination spread at any radiological level.

Direct Cause: The direct cause for this event was determined to be:

DC-03-01 – A5B2C05 - Communications Less than Adequate (LTA) / Written Communication Content LTA / Ambiguous instructions/requirements (the written instructions are interpretable in more than one way).

Section 1.0 of ERP-222S-009 states initiating conditions for this emergency response procedure to be:

> "A spill or release of hazardous/radiological material occurs, OR contamination spread has been identified during operations, radiological surveillance, continuous air monitor (CAM) alarm, PCM2 alarm, or self-survey."

While this can be interpreted as including any contamination spread at any radiological level, even within a designated contamination area, it has consistently been interpreted as a spread of contamination caused by an initiating emergency situation; contamination outside of a contamination area; or contamination levels exceeding the safe condition levels of the applicable RWP.

Contributing Cause:

No contributing cause was identified.

5.4 EXTENT OF CONDITION

The facility practice and procedures are designed to limit radiological contamination within the engineered controls of the laboratory fume hoods, glove boxes, and hot cells. The hoods and hot cells are located within radiological areas that are typically maintained free of removable radioactive contamination, but are posted as a Contamination Areas or Radiological Boundary Areas for efficient operation. This configuration is unique to the 222-S Laboratory.

5.5 GENERIC IMPLICATIONS

The root cause has potential implications for other emergency versus routine conditions and situations. The clarity and understanding of procedures to know when to enter an emergency response procedure is vital to the well-being of personnel.

5.6 SAFETY SIGNIFICANCE

The spread of contamination event associated with this finding resulted in no impact to human safety, the environment, or equipment. Identification and decontamination of the areas within the 222-S Laboratory were completed.

5.7 RECOMMENDED CORRECTIVE ACTIONS

Three corrective actions have been identified to address the causes identified. Clarification of entrance criteria for spills, releases, and CAM alarms; development of a procedure for preplanned actions for response to contamination in a Contamination Area; and conducting appropriate drills would prevent recurrence of this issue.

Corrective Actions:

CATPR-03-01	Revise ERP-222S-009 to clarify the entrance criteria for spills, releases, and CAM alarms.
Actionee:	D. B. Hardy
Due Date:	April 30, 2009
Deliverable:	Approved procedure.

CATPR-03-02	Develop procedure for preplanned actions for response to contamination in a radiological area (ATS-LO-200-110).
Actionee:	D. B. Hardy
Due Date:	April 30, 2009
Deliverable:	Approved procedure.

CATPR-03-03	Perform a drill regarding the use of ERP-222S-009 and ATS-LO-200-110 for response to contamination in a radiological area.
Actionee:	D. B. Hardy
Due Date:	May 29, 2009
Deliverable:	Attendance roster of drill.

DC-03-01	This cause will be addressed by corrective actions CATPR-03-01, CATPR-03-02, and CATPR-03-03.
Actionee:	N/A
Due Date:	N/A
Deliverable:	N/A

Compensatory Measures:

No compensatory measures were taken as a result of this event.

Remedial Corrective Actions:

DOE-ORP debriefed WRPS management on January 15, 2009 regarding the surveillance, including Finding S-09-ESQ-TANKFARM-003-F03 (Immediate and follow-up actions contained in ERP-222S-009, "Spill/Release/Continuous Air Monitor Alarm," were not initiated or completed for a spill of radioactive material at 222-S Laboratories). Immediate actions were taken by the 222-S Laboratory Facility manager in response to the finding. A verbal briefing of the 222-S Laboratory Facility Operations Managers (FOMs) and Building Emergency Directors (BEDs) was conducted. During that briefing, a protocol for responding to contamination detected in the laboratory radiological areas, but outside of a fume hood, glovebox, or hot cell, was established. This protocol, while undocumented pending generation of a procedure (ATS-LO-200-110), included:

- Stop work
- Orderly egress from contamination areas
- Development of Recovery Plan
- Development of job-specific RWP
- Review and approval of Recovery Plan by Operations Management.

Only after these conditions were met would access be allowed back into the contamination area to investigate cause and correct.

In addition, a new procedure, ATS-LO-200-110, "222-S Laboratory Response to Contamination Detected in Laboratory Radiological Areas," was developed and has been issued (effective date March 10, 2009). This provides a documented protocol and direction

to all 222-S personnel for response to contamination detected in laboratory radiological areas. Appropriate personnel have been trained on this procedure.

In conjunction with the issuance of ATS-LO-200-110, a revision to ERP-222S-009, "Spill/Release/Continuous Air Monitor Alarm," was issued March 10, 2009. This revision clarified the entry criteria for use of this procedure by making it specific to a spill or release of hazardous/radiological material.

Corrective Actions to Prevent Recurrence:

Actions taken to address the root cause will prevent recurrence.

5.8 PROBLEM ANALYSIS

The ORP finding is accurate. ERP-222S-009 was not utilized for immediate or follow-up actions for the contamination spread event. Use of this emergency response procedure was considered by facility management at the time of the event. A determination was made by appropriate management not to enter into the procedure. This determination was based upon the initiating contamination levels not exceeding the approved Radiological Work Permit (RWP) safe condition levels, no known spill condition being recognized (therefore no emergency situation), and no spread of contamination outside of an existing contamination area.

Section 1.0 of ERP-222S-009 states initiating conditions for this emergency response procedure to be:

> "A spill or release of hazardous/radiological material occurs, OR contamination spread has been identified during operations, radiological surveillance, continuous air monitor (CAM) alarm, PCM2 alarm, or self-survey."

While this can be interpreted as including any contamination spread at any radiological level, even within a designated contamination area, it has consistently been interpreted as a spread of contamination caused by an initiating emergency situation; contamination outside of a contamination area; or contamination levels exceeding the safe condition levels of the RWP, rather than a broader interpretation of being any contamination spread at any radiological level. The initiating conditions in ERP-222S-009 do not accurately identify the intended entry criteria within the procedure.

Preplanned actions in response to contamination discovered inside a Contamination Area are not defined. Though a specific methodology and approach has been established for responding to unexpected contamination detected within the 222-S Laboratory Contamination Areas, the process is not documented.

5.9 TIMELINE

An events and causal factors chart is provided in Attachment B.

6.0 FINDING S-09-ESQ-TANKFARM-003-F04

6.1 PROBLEM STATEMENT

General Radiological Work Permits (RWPs) inappropriately utilized for emergency response activities.

6.2 BACKGROUND

At Tank Farms, response to alarms throughout the years has been performed utilizing General RWPs. Years of data have shown no abnormal results from these alarms, which has validated the use of General RWPs as the response tool. However, current HNF-5183, "Tank Farm Radiological Control Manual," (TFRCM) language does state that General RWPs are to be used for routine or repetitive activities, such as tours and inspections or minor work activities, in areas with well characterized and stable conditions. In the case of an alarm that places the facility in an abnormal condition, the use of General RWPs for re-entry prior to determining actual conditions would be inappropriate.

The use of General and Job-Specific RWPs is not regulatory driven. Regulations simply state that written authorizations are required. Contractually, Washington River Protection Solutions LLC (WRPS) is bound by 10 CFR 835, "Occupational Radiation Protection," and HNF-MP-5184, "Washington River Protection Solutions Radiation Protection Program (RPP)." RPP Requirement 114 states "radiological work activities shall be conducted as specified by the controlling technical work documents and Radiological Work Permit." It is not specific as to the classification of RWP to use. Therefore, the use of the General RWP for performance of these activities is within the requirements of 10 CFR 835 and the RPP. However, it is outside the guidance document of the TFRCM that WRPS utilizes in the implementation of 10 CFR 835 and the RPP.

6.3 CAUSE STATEMENT

Over many years of responding to loss of ventilation and high tank pressure (over pressurization) alarms, no issues have been identified that would indicate a breach of a tank to the environment. Shift Managers and workers have found that the use of a General RWP and its prescribed limitations were satisfactory in responding to events. In addition, management follow-up and assessment activities have not identified use of General RWPs as a compliance issue.

Root Cause: The root causes of this event were determined to be:

RC-04-01 – A4B1C01 – Management Problem / Management Methods LTA / Management policy guidance/expectations not well-defined, understood or enforced

RC-04-02 - A3B3C06 – Human Performance Less Than Adequate (LTA) / Knowledge Based Error / Individual underestimated the problem by using past event as basis.

Direct Cause: The direct cause of this event was determined to be:

DC-04-01 – A3B2C04 - Human Performance LTA / Skill Based Error / Previous success in use of rule reinforced continued use of rule.

Contributing Cause: The contributing cause of this event was determined to be:

CC-04-01 – A4B1C04 - Management Problem / Management Methods LTA / Management follow-up or monitoring of activities did not identify problems.

6.4 EXTENT OF CONDITION

Base Operations and 222-S both use General RWPs as described. The Single Shell Tank (SST) Retrieval and Closure organization operate to a General RWP except when an alarm or abnormal condition occurs. In which case, they stop the job, exit the area, and re-ACE under a Job-Specific RWP for investigative surveys.

6.5 GENERIC IMPLICATIONS

Utilization of a General RWP for response to these alarms in itself does not result in placing personnel or the environment at risk.

6.6 SAFETY SIGNIFICANCE

Use of a General RWP is not a safety issue. Limits are set for the General RWP and not exceeded in response. Dose is still recorded and monitoring instrumentation is used.

6.7 RECOMMENDED CORRECTIVE ACTIONS

Corrective Actions:

The following corrective action addresses the root causes:

CATPR-04-01	Evaluate the implementation of requirements of HNF-5183 as they apply to General RWPs. Initiate revision to HNF-5183 or RWPs per the results of the evaluation.
Actionee:	J. Rolph
Due Date:	4/24/09
Deliverable:	Copy of evaluation and revised manual/RWPs,as necessary.

CATPR-04-02	This cause will be addressed by corrective action CC-03.
Actionee:	N/A
Due Date:	N/A
Deliverable:	N/A

DC-04-01	This cause will be addressed by corrective action CC-03.
Actionee:	N/A
Due Date:	N/A
Deliverable:	N/A

The following corrective action addresses the contributing cause:

CC-04-01	Schedule Radiological Control to perform a minimum of 2 management observations a month, focusing on compliance to the TFRCM and implementation of 10 CFR 835, "Occupational Radiation Protection," and HNF-MP-5184, "Washington River Protection Solutions Radiation Protection Program (RPP)."
Actionee:	S. D. Hyman
Due Date:	4/24/09
Deliverable:	Copy of schedule to include expectations, topical areas, and assignees.

Compensatory Measures:

No compensatory measures were taken as a result of this event.

Remedial Corrective Actions:

No remedial actions were taken as a result of this event.

Corrective Actions to Prevent Recurrence:

Actions taken to address the root cause will prevent recurrence.

6.8 PROBLEM ANALYSIS

The ORP finding is accurate. Years of responding to alarms at tank farms have provided no indication of fugitive emissions following tank overpressure alarms. As such, personnel have not exceeded limiting conditions of General RWPs as a result of responding to these alarms on this type of RWP. This negative data has led Tank Farm personnel to continue to respond to abnormal events utilizing General RWPs. In addition, previous reviews failed to identify a non-compliance issue.

6.9 TIMELINE

An event and causal factors chart is provided in Attachment B.

7.0 FINDING S-09-ESQ-TANKFARM-003-F05

7.1 PROBLEM STATEMENT

Conduct of Operations, Radiological Control and Industrial Hygiene (IH) controls implemented during initial event response, and subsequent planned response actions for the 702-AZ spill were not adequate to prevent additional personnel exposures to tank vapors and tank ventilation condensate.

7.2 BACKGROUND

On December 17, 2008, a qualified Field Work Supervisor (FWS) and supporting crew were assigned to perform the air flow testing of tank exhaust on the downstream side of the A and B train high efficiency particulate air (HEPA) filters. Four members of the crew (Industrial Hygiene Technician (IHT), Radiological Control Technician (RCT – also known as a Health Physics Technician (HPT)), and 2 vent and balance (V&B) personnel), were stationed in the Continuous Air Monitor (CAM) room to perform the test, and the remaining two personnel (Nuclear Chemical Operator (NCO) and FWS) were stationed to guard the two doors into the CAM room during testing. The work crew in the room donned self-contained breathing apparatus (SCBA) and performed a portion of the work without incident. Upon removal of a lower testing port cover, approximately one (1) quart of fluid spilled from the port "like a faucet" according to the V&B personnel. The cap was replaced.

The IHT was monitoring for volatile organic compounds (VOCs) and ammonia, with results reportedly below detection limits. The RCT surveyed the glove of the V&B person that came into contact with the condensate and found no contamination. The work crew removed their SCBAs and called in the two team members guarding the doors. The FWS determined the fluid to be a spill and notified Base Operations Shift Manager (BOSM) at 1350.

The BOSM entered TF-AOP-011, "Response to Chemical and/or Radiological Events." At 1400, the BOSM logged a call to 911, and requested no response. At 1405, the six team members at the spill site were sent to the medical provider AdvanceMed Hanford (AMH) for medical evaluation, as required by the AOP. The NCO and Operations Engineer (FWS) at the scene controlled access to the spill area. At 1415, the doors to the spill area were posted, "No entry without shift manager's authorization."

Subsequently, the BOSM directed a team to re-enter the spill area to monitor the air for VOCs and ammonia, take an air sample in a Tedlar bag, take a fluid sample for chemical analysis, and perform radiological surveys. The re-entry team was not directed to (and did not) wear any anti-contamination clothing or utilize respiratory protection. The two RCTs assigned to the re-entry team (that did not enter the spill area/room) reported a "funny, wet metal" smell in the room and the RCTs immediately exited the spill area. The IHT decided to remain in the spill area for approximately two additional minutes to collect the Tedlar air sample. While obtaining the Tedlar bag sample, the IHT also monitored for VOCs and ammonia. The results were below the detection limits. The fluid sample and radiological surveys were not performed as directed by the Shift Manager. Note: The spilled fluid has since evaporated.

Approximately 24 hours after the spill occurred, a fact finding meeting was held by Washington River Protection Solutions LLC (WRPS). Neither a fluid sample nor radiological surveys of the spill area had been performed at the time of the fact-finding. Improper response issues identified by the U.S. Department of Energy, Office of River Protection (ORP), but not determined by the WRPS fact-finding meeting include:

1. Contrary to Radiological Worker II training, workers did not perform SWIMS immediate actions (stop work, warn others, isolate the area, and minimize exposure), but instead removed their respiratory protection in the spill and called two individuals who were outside the spill area into the room rather than minimizing their exposure by exiting the room.

   WRPS Response: SWIM was implemented when liquid was observed coming from the test port unexpectedly. Workers replaced the plug and stopped work (S). They immediately notified the BOSM, who notified the facility workers and supervisors using a radio announcement and the SOEN system (W). Hazard exposure (tank

vapors) was isolated when the test port plug was replaced (I). Workers continued to control access to the room and posted signs restricting access until the management notification and approvals that hazards had been identified and controlled were obtained (M).

Based on IH direct readings at the time of the event, the condensate spill itself was determined to be a non-hazard. Readings were less than detectable for VOCs and ammonia, and the HPT detected no radioactivity using field instruments. However, The expectations of conservative decision making will be reiterated as part of Corrective Action CC-03.

2. An Incident Command Post was not established and a formal process or plan was not initiated to ensure personnel responding to the spill were adequately protected. As a result, two responding RCTs who were not required to wear respiratory protection reported symptoms and were sent to AMH for evaluation

   WRPS Response: Existing condensate sample analysis data and field readings indicated no hazards were present as a result of the spill. Conservative measures were taken to protect workers when the spill occurred by stopping, isolating the spill area and obtaining additional sampling information which further indicated no hazards present. The BOSM used this information in determining no emergency existed which would otherwise warrant activation of an Incident Command Post.

   After the spill area was secured, a plan was developed to obtain additional radiological sampling data to corroborate existing sampling data. A Chemical Hazard Assessor, Radiological Control Manager, the BOSM, an IHT, and several HPTs identified the scope, identified the hazards, defined appropriate PPE, and proceeded to the spill area to obtain sample results. The IHT sampled the room for VOCs and ammonia with no detectable results, and reported no odors. The two HPTs that were going to perform the additional radiation monitoring observed an unfamiliar odor when the spill room door was opened and refused to perform radiological sampling of the room. They reported no symptoms from the odors at the time. In the morning when the two HPTs returned to work they reported "headaches" and were sent to AMH for evaluation. It is uncertain whether or not these symptoms are related to the odors they reported the previous day. Workers who had performed this work many times in the past did not report any unusual odors, even after the spill. They wore SCBA for respiratory protection during breaching the tank vapor barrier (opening of the test post), but removed them once the barrier was

re-established and no VOCs or ammonia were detected on direct reading instruments, in accordance with the work package.

3. The decision to send the responders into the spill area without personal protective equipment (PPE) was made with the assumption that the spill conditions were known even though a water sample and radiological surveys had not been performed. The lack of specific knowledge should have resulted in conservatively approaching the spill and treating the fluid as an unknown. Interviews with the two responding RCTs found they were not informed of odors in the room.

   WRPS Response: The BOSM approved the plan to re-enter the spill room to obtain an air grab sample and radiological smear of the spill area after a Chemical Hazard Assessor, a Radiological Control Manager, and the responders discussed and agreed on a sampling plan. Sample analysis data from previous 702-AZ condensate sampling events indicated benign toxic and radiological constituents. Field readings obtained from the IHT indicated no VOC or ammonia hazards. A radiological survey of the glove that was slightly wetted as a result of the spill detected no activity. All these elements were factored into PPE assignment, which to date are still supported by facility staff. The two HPTs involved in developing the sampling plan were not informed of odors because the crew that had previously entered the room did not observe unusual odors.

4. The BOSM concluded that the conditions for exiting TF-AOP-011 were to identify and control the area. The procedure states the termination/exit criteria to be: "Radiological and/or chemical event has been stabilized, hazards fully identified and controlled, and all affected personnel notified." The BOSM, in interviews with the ORP personnel indicated that the phrase did not require him to characterize the spill or know any of the spill constituents, but only to "identify" a spill. This is an erroneous, non-conservative interpretation of the procedure requirements. Such an assumption fails the intent of performance in the execution of 29 CFR 1910.120(p)(8)(ii) and (iii).

   WRPS Response: The BOSM felt hazards were fully identified and controlled, and had notified all affected employees. Previous sample analysis data and real time field readings indicated no hazards were present. This decision was supported by the Hazard Assessor and the Radiological Control Manager.

5. The Industrial Hygienist involved in planning the re-entry did not address the risk assessment and PPE selection process per 29 CFR 1910.123 (d) (wrong citation) and

failed to plan for the presence of dermal hazards as identified in RPP-RPT-24794," Concentrations of Chemicals of Potential Concern in Water and Organic Condensates," Revision 1. This study provides a list of Chemicals of Potential Concern (COPC) and associated concentrations found in concentrate. It is intended to be utilized in conjunction with RPP-34147, "Tank Waste Dermal Exposure Assessment," Revision 0, and TOC-ESHQ-S_IS-C-02, "Personal Protective Equipment," in the consideration and selection of chemical protective clothing.

WRPS Response: Prior data is available on this material. An extensive evaluation of chemical makeup and vapor exposure potential of condensates was previously conducted. See RPP-RPT-24794, "Concentrations of Chemicals of Potential Concern in Water and Organic Condensate." This report is based on a worst case scenario and indicates that the condensate would not pose a potential vapor health hazard. Also an extensive evaluation of chemical makeup and potential dermal hazards was previously conducted in RPP-RPT-24794, "Concentrations of Chemicals of Potential Concern in Water and Organic Condensates," and RPP-34147, "Tank Waste Dermal Exposure Assessment." These evaluations provided the technical support for the decision making process used by the industrial hygienist. It should be noted that the purpose of the entry was to take a Tedlar bag sample and no contact was planned with the condensate material. The data and information has been provided to the ORP industrial hygienist.

6. When workers were transported to AMH for evaluation, the chemicals of concern in the condensate should have been shared with workers in accordance with ISMS principles, and reported to the clinic for the 8 employees eventually sent to AMH for evaluation per industry standards and 29 CFR 1910.120(f)(ii). To date, this action has not occurred.

   WRPS Response: The personnel transported to AMH were transported due to the AOP response, not due to odor concerns. Information concerning tank waste and other tank materials has been provided to AMH. AMH, the medical provider, has established a protocol to handle all potential tank waste incidents as unknown because of the wide variety of materials that could be present. Also, a blood and urine sample are collected and preserved for 30 days in case additional information prompts other medical tests.

7. The lack of proper response to the spill during the work activity indicates that potential abnormal events and expected actions were not planned for or discussed during pre-job briefings.

   WRPS Response: Condensate was identified in the work package as a potential waste stream. An anticipated volume of waste was accounted for on the waste management checklist. However, prior annual tests had not recorded condensate spilling from the test ports.

In addition, the following response and IH programmatic questions were not addressed during the fact-finding, and although requested by ORP staff, have not been addressed to date:

1. the justification for the choice of limited IH instrumentation data and conclusions drawn

   WRPS Response: TFC-PLN-34, "Industrial Hygiene Exposure Assessment Strategy," provides the criteria for direct reading instrument (DRI) selection and use. The iTX and the ppbRAE PID w/10.6 eV lamp were sufficient for detection of chemicals with acute effects that could be present based on IH characterization of that location. See RPP-RPT-29262, A-Prefix Tank Farms Vapor Hazard Characterization Report [2006] and data available in the Tank Farm Industrial Hygiene database [TFIH]).

   *Additionally, a decision was made to monitor for those chemicals with STELs (potential for acute effects) which were found above 10 % of their respective OEL during tank farm characterization. The turn back value of 2 ppm for organic compounds was based on the A-Prefix tank farm characterization. Ethylamine was found above 10 % of it's OEL in multiple sources. A conservative approach was chosen to base the turn back value on the TWA action level and that all the organic compounds detected would be ethylamine. Thus 50 % of the TWA OEL is 2.5 ppm (5 * 0.5). The correction factor for the instrument is 0.8 resulting in a turnback value of 2 ppm (2.5 * 0.8). The turnback value for ammonia was calculated using the same method.*

2. lack of condensate characterization (the product was neither sampled, nor was the condensate characterization report consulted)

   WRPS Response: No the liquid was not sampled. Extensive evaluation of chemical makeup and vapor exposure potential of condensates was previously conducted. See RPP-RPT-24794 (R1), "Concentrations of Chemicals of Potential Concern in Water

and Organic Condensates." This report is based on a worst case scenario and indicates that the condensate would not pose a chemical health hazard.

Additionally, the selection of instruments was based on those chemicals with STELs (potential for acute effects) and detected above 10 % of their respective OEL during characterization to ensure personnel were not entering an area where there was a potential for an immediate acute effect.

3. absence of correspondence with AMH regarding possible cutaneous absorbed agents (or lack of)

   WRPS Response: AMH has a standard battery of tests for all exposures where the toxicant is unknown. It includes lab work such as CBC, urinalysis, etc.; AMH also draws a blood and urine sample for 30 day preservation in case the toxicant is identified and further testing is needed.

4. failure to evaluate protective gloves via internal moisture and headspace analysis for semi-volatile compounds that may have permeated (or simple conclusive evidence that no such compounds were present), and

   WRPS Response: Extensive evaluation of chemical makeup and potential dermal hazards has previously been conducted in RPP-RPT-24794 (R1), "Concentrations of Chemicals of Potential Concern in Water and Organic Condensates," and RPP-34147, "Tank Waste Dermal Exposure Assessment." Based on these evaluations, the condensate would not pose a chemical health hazard. As a precautionary measure, the glove was surveyed for radiological contamination with negative results.

5. what, if any vapor suppressant should be used on tank waste spills and the technical rationale for the conclusions.

   WRPS Response: In this case, the water has been allowed to evaporate. The response depends on the specific situation. The response procedures for spills begin with TF-AOP-011 or TF-ERP-005.

7.3 CAUSE STATEMENT

This finding has been evaluated as a performance improvement and therefore no causal analysis was performed. However, Corrective Action CC-03 will reiterate the expectations for conservative decision making and support continuous performance improvement.

7.4 EXTENT OF CONDITION

No extent of condition was performed for this Finding.

7.5 GENERIC IMPLICATIONS

No generic implications have been identified in response to this review.

7.6 SAFETY SIGNIFICANCE

No potential affect to human, environmental, or equipment safety was found as a result of this review.

7.7 RECOMMENDED CORRECTIVE ACTIONS

CA-05-01	Issue Lessons Learned bulletin emphasizing the importance of proper communication, contingency planning, response to vapors, and voluntary respirator use.
Actionee:	N. J. Milliken
Due Date:	5/24/09
Deliverable:	Copy of issued bulletin.

CA-05-02	Evaluate compiling the IH responses provided in Finding S-09-ESQ-TANKFARM-003-F05 to increase the ease of information retrieval. Incorporate information into current documents or develop new document (plan, procedure, etc.) to capture the information provided.
Actionee:	M. Jones
Due Date:	6/24/09
Deliverable:	Copy of new or revised document(s).

7.8 PROBLEM ANALYSIS

Although no evidence of a non-compliance was indicated, WRPS has reviewed this finding and initiated corrective actions to promote improvement.

TFC-OPS-OPER-C-14, "Event Investigation Process," a fact finding is a low level investigation (typically consisting of individual or small group interviews with involved personnel) that seeks to understand the precursors leading to the event and potential causes. The product of a fact finding is typically a summary of the Investigation, a timeline of event (date/time correlation), and a discussion of potential causes (human

performance/programmatic/organizational issues). Fact findings are not used to analyze the event or determine corrective actions.

7.9 TIMELINE

Not applicable. A timeline is provided in Event Investigation Report (EIR) 2008-025, "Fact Finding for 702-AZ: Condensate Drained from Ventilation Duct on 12/17/08."

8.0 FINDING S-09-ESQ-TANKFARM-003-F06

8.1 PROBLEM STATEMENT

Industrial Hygiene Technicians (IHTs) have not been trained on response actions for tank over-pressure alarms.

8.2 BACKGROUND

As stated in the "2007 Labor Agreement between CH2M HILL Hanford Group, Inc. (CH2M Hanford) and Hanford Atomic Metal Trades Council (HAMTC), AFL-CIO, Appendix A, "Agreement(s) – Industrial Hygiene Technicians, Seniority Group 062, Local 984," the job description for an IHT states:

"Perform routine sampling and monitoring tasks, using established procedures, to support the Industrial Hygiene effort within the CH2M Hill Hanford Group, Inc. (CH2M HILL) as was designated in NLRB Case 19-RC-13356. Keep associated records. Also perform routine functional checks of Industrial Hygiene equipment and, as assigned by management, carry out special studies and sampling and assist in training and communications."

IHTs are, therefore, categorized by DOE O 5480.20A, Chapter IV, 2 (d), as Technicians requiring the following minimal training:

> "Technicians are principally involved in calibration, inspection, troubleshooting, testing, maintenance, and radiation protection activities at the facility. Examples are laboratory technicians, instrument technicians, and radiological control technicians. (1) Experience: Job related 1 year."

The basis for this finding recites DOE O 5480.20A, Chapter IV, 4.a.(2)(a), "Personnel Selection, Qualification, and Training Requirements for DOE Nuclear Facilities/Non-Reactor Nuclear Facility – Personnel/Entry-Level Requirements/Operators." The requirements listed in this section apply to operating organization personnel including operators, fissionable material handlers, and supervisors, and, therefore, would not apply to Technicians.

However, WRPS, the new Tank Operations Contractor, has established the following core training requirements for individuals performing duties as an IHT:

03E060	Tank Farm Facility Emergency Hazards Checklist
35E001	TFC Emergency Response Organization Facility Specific Initial Training
350761	Tank Farm Facility Orientation
350292	TFC Industrial Hygiene Technician Qualification
031220	40-Hour Hazardous Waste Site Worker
357884	WRPS Industrial Health Technician Fundamentals
358001	Tank Operations Contractor HGET
351524	Chemical Hazards Awareness Training
020130	Confined Space Entry
020147	Fall Hazard Recognition and Prevention
020193	Heat Stress Training
020194	Hearing Conservation
350933	Safety Basis Training

[Note: IHTs are considered skilled support personnel and are not assigned to the Facility Emergency Response Organization (FERO) checklist positions (DOE-0223, RLEP 1.1) as per paragraph 12.2.2.3.1 of DOE/RL-94-02, "Hanford Emergency Management Plan." Personnel are trained as per their specific expertise (i.e. qualification card, on-the-job training (OJT)). In the event of an emergency these response personnel would be provided a briefing that includes personal protective equipment (PPE), hazards present, duties, etc. prior to responding.]

As identified in the Finding, Course 35E001, "TOC Emergency Response Organization Facility Specific Initial Training," provided to IHTs does not include a comprehensive review of emergency procedures or IH-specific emergency response. Alarm response actions, procedures, communications, and recovery action training is provided via On-The-Job training and discussed as part of 350292, Revision 0608.1, "TOC Industrial Hygiene Technician Qualification Card." It is recommended that course 350292 be revised to strengthen training on alarm response actions including AOPs, ARPs, and ERPs.

8.3 CAUSE STATEMENT

This finding has been evaluated as a performance improvement and therefore no causal analysis was performed.

8.4 EXTENT OF CONDITION

A review of Health Physics Technician (HPT) training was conducted and it was determined that the path forward for IHTs would be to provide general awareness and response training as part of IHT continuing training, similar to the training received by the HPTs.

8.5 GENERIC IMPLICATIONS

No generic implications have been identified in response to this review.

8.6 SAFETY SIGNIFICANCE

No potential affect to human, environmental, or equipment safety was found as a result of this review.

8.7 RECOMMENDED CORRECTIVE ACTIONS

Corrective Actions:

The following action is in response to the identification of the opportunity for improvement:

CA-06-01	Update course 350292 to include a discussion/demonstration of alarm response actions including AOPs, ARPs, and ERPs.
Actionee:	M. Jones
Due Date:	8/24/09
Deliverable:	Updated training course material.

Remedial Corrective Actions:

Course 35E001, "TOC Emergency Response Organization Facility Specific Initial Training," was provided to IHTs.

8.8 PROBLEM ANALYSIS

The ORP finding is not accepted. No evidence of a non-compliance was found.

8.9 TIMELINE

Not applicable.

9.0 LESSONS LEARNED

The root and common cause analysis identified three common causes, which if corrected, will assist WRPS in the performance and safety of field operations. Personnel errors coupled with insufficient supervision to reinforce expectations were primary contributors to these events outlined in this report. Failure to exercise a questioning attitude and employ a conservative decision making process led to inappropriate alarm/abnormal response by WRPS. Improved communications clear and concise management expectations, and procedure compliance are imperative in the successful implementation of ISMS Core Functions.

10.0 END POINT ASSESSMENT

EPA-01	Perform an end point assessment. 1. Review objective evidence from all corrective actions to ensure completeness and adequacy. 2. Assess field operations for compliance to response requirements to abnormal operating conditions since January 2009. • Review PER database for similar events. • Review MOPs for similar events. 3. Interview selected operations personnel on changes in management expectations to determine extent of assimilation of corrective actions. • Sample group should include (6) FLMs, (6) Shift Managers, (15) NCOs, (6) IHTs and (15) HPTs. •
Actionee:	N. Milliken
Due Date:	2/28/2010
Deliverable:	ESRB approved End Point Assessment Report.

ATTACHMENT A
COMMON CAUSE ANALYSIS REPORT FOR WRPS-PER-2009-0385

COMMON CAUSE ANALYSIS
WRPS-PER-2009-0385

Dated March 31, 2009

Results of DOE Surveillance of WRPS Response to Abnormal Events

EXECUTIVE SUMMARY

This report provides the results of the common cause analysis (CCA) performed to address the Concern contained in WRPS-0900518, "Contract NO. DE-AC27-08RV14800 – Washington River Protection Solutions LLC (WRPS) Response to Abnormal Events Surveillance S-09-ESQ-TANKFARM-003," documented in WRPS-PER-2009-0385, "Results of DOE Surveillance of WRPS Response to Abnormal Events." Common cause analysis was conducted utilizing a barrier analysis technique and substantiated by event decomposition, a historical review of events contained within the Problem Evaluation Request (PER) database, and personnel interviews.

The CCA identified three common causes associated with the 6 findings and one concern. These were then evaluated against corrective action plans and actions taken in response to the six findings listed in the surveillance report to determine their adequacy and to note additional improvement opportunities. As a result, a negative determination was made that the event causal factors were being addressed to prevent recurrence, resulting in three judgments of need being identified. These are:

1. Reestablish a culture committed to procedural compliance, conservative decision making, and questioning attitude
2. Perform procedure reviews for consistency and perform field observations to ensure procedure compliance and effective communications
3. Strengthen training and qualification requirements relied upon to implement expectations

These opportunities were captured in the corrective actions established as a result of this CCA and in many cases form the acceptance criteria for the actions specified.

COMMON CAUSE ANALYSIS RESULTS

The CCA identified three common causes that were apparent in the six findings and one concern reviewed. Personnel errors coupled with insufficient supervision to reinforce expectations were primary contributors to these events. Communication problems, training deficiencies, as well as management expectations regarding procedural compliance, should be addressed.

Common Cause 1 – Hazards Control requirements have not been completely effective in ensuring identified hazards are adequately mitigated to support the performance of work within an acceptable safety envelope.

Common Cause 2 – Generalization of work instructions does not ensure that hazards are controlled as needed to maintain an appropriate safety envelope for the performance of work.

Common Cause 3 – Event related breakdowns in communication reflect a common weakness in training and qualification relied upon to implement expectations.

PROBLEM STATEMENT

Weakness in Emergency Response Program implementation is indicated based on several instances in which WRPS Base Operations and 222-S Laboratory management team did not implement approved abnormal response procedures following indication of abnormal operating conditions.

In response to the surveillance, a team was chartered to perform a root cause analysis on the six findings and one concern listed in the U. S. Department of Energy, Office of River Protection surveillance report identified in WRPS-PER-2009-0385. It was determined by the team that each of the findings would undergo root cause analysis, while the concern would undergo a separate common cause analysis (a root cause analysis technique).

EVENTS ANALYZED

Concern S-09-ESQ-TANKFARM-001-C01 – Weakness in Emergency Response Program implementation is indicated based on several instances in which WRPS Base Operations and 222-S Laboratory management team did not implement approved abnormal response procedures following indications of abnormal operating conditions.

Finding S-09-ESQ-TANKFARM-003-F01 – Alarm response procedures for tank high pressure alarm were not utilized for AW Tank Farm high pressure alarms as required.

Finding S-09-ESQ-TANKFARM-003-F02 – Abnormal Operating Procedure immediate actions were not taken for elevated airborne radioactivity levels identified during decontamination activities at the 204-AR decontamination facility.

Finding S-09-ESQ-TANKFARM-003-F03 – Immediate and follow-up actions contained in ERP-222S-009, "Spill/Release/Continuous Air Monitor Alarm," were not initiated or completed for a spill of radioactive material at 222-S laboratories.

Finding S-09-ESQ-TANKFARM-003-F04 – General Radiological Work Permits (RWPs) are inappropriately utilized for emergency response activities.

Finding S-09-ESQ-TANKFARM-003-F05 – Conduct of Operations, Radiological Control and Industrial Hygiene (IH) controls implemented during initial event response, and subsequent planned response actions for the 702-AZ spill were not adequate to prevent additional personnel exposures to tank vapors and tank ventilation condensate.

Finding S-09-ESQ-TANKFARM-003-F06 – IH Technicians (IHTs) have not been trained on response actions for tank over-pressure alarms.

BACKGROUND

In accordance with the requirements of TFC-ESHQ-Q_ADM-C-11, "Root and Common Cause Analysis and Corrective Action Planning," a common cause analysis was performed.

Common cause analysis is a root cause analysis technique that characterizes the symptoms of organizational and programmatic issues and human errors. In addition, end point assessments are required as part of common cause analysis reports with significant category recurring Occurrence Reporting and Processing System (ORPS) reports and significant PERs. WRPS-PER-2009-0385 has been categorized as a significant PER, but has not been declared in the ORPS, per TFC-OPS-OPER-C-24. "Occurrence Reporting and Processing of Operations Information."

The CCA team was comprised of: Nancy Milliken, Beth Mata, Keith Gray, Mark Garrett, Don White, and Rich Allen. Technical points of contacts included: Rob Gregory, Eric Bickel, Sandy Hyman, and Mark Jones.

COMMON CAUSE ANALYSIS SUMMARY

The CCA identified three common causes associated with the events. These common causes were developed from the results of event decomposition and barrier analysis, and were then evaluated against corrective action plans and compensatory measures to determine their adequacy and note any additional improvement opportunities.

In accordance with TFC-ESHQ-Q_ADM-C-11, the following provides a summary of the events by dimension.

Event	Organization	Program	Work Process	External Factor Influencing Act	Internal Factor Influencing Act	Human Error Type
F01 - AW Tank Farm High Pressure Alarms	Base Operations	Operations	Operations	Management	Incorrect Performance Due to Mental Lapse	A3B1C01
F02 – Elevated Airborne Radioactivity at 204-AR	Base Operations	Radiological Control	Operations	Management	Incorrect Assumption that a correlation existed between two or more facts	A3B3C05
F03 – 222-S Spread of Contamination	Base Operations 222-S Laboratory	Operations	Operations	Training	None	None
F04 – Use of General RWPs	Base Operations, Single Shell Tank (SST) Retrieval and Closure	Radiological Control	Radiological Control	Management	Individual Underestimated the Problem by Using Past Event as Basis, Previous Success in Sue of Rule Reinforced Continued Use of Rule	A3B3C06, A3B2C04
F05 – 702-AZ Condensate Spill	Base Operations	Operations	Operations	Management	None	None
F06 – IHT Training	Base Operations, SST Retrieval and Closure, Safety and Health	Industrial Hygiene	Training	None	None	None

Attachment 1 provides the analysis approach, including detailed event decomposition, interview results, and a review of corrective actions taken. Attachment 2 provides the results

of the barrier analysis which was used to develop the common cause and substantiate the additional corrective actions required.

To facilitate discussion, this CCA utilizes the five core functions of Integrated Safety Management System (ISMS) to summarize its results and demonstrate the completeness and interrelationship between the common causes. At the conclusion of this section is a table summarizing the review of the common cause versus corrective actions and additional corrective actions required are listed.

The five core functions of an Integrated Safety Management System (ISMS) are:

- Define the Scope of Work. Missions are translated into work, expectations are set, tasks are identified and prioritized, and resources are allocated.
- Identify the Hazards. Hazards associated with the work are identified, analyzed, and categorized.
- Develop and Implement Hazard Controls. Applicable standards and requirements are identified and agreed-upon, controls to prevent/mitigate hazards are identified, the safety envelope [authorization basis] is established, and controls are implemented.
- Perform Work Within Controls. Readiness is confirmed and work is performed safely.
- Provide Feedback and Continuous Improvement. Feedback information on the adequacy of controls is gathered, opportunities for improving the definition and planning of work are identified and implemented, line and independent oversight is conducted, and, if necessary, regulatory enforcement actions occur.

Define Scope of Work

In defining the scope of work, the first core function of ISMS is implemented. The detail and rigor by which the work is defined influences the ability to perform the subsequent steps of hazard identification, hazard control, and the performance of work. In all cases of field work, the work to be performed was clear to those involved.

No common cause was found for Define Scope of Work.

Hazard Identification

For the category of Hazard Identification if the hazard itself, including the magnitude of the hazard, is not adequately identified, subsequent hazard control processes cannot be effectively implemented to mitigate the hazard. Two attributes were evaluated for this category, hazard encountered not evaluated and task not analyzed.

No common cause was found for Hazards Identification.

Hazard Control

The category of Hazard Control evaluated the linkage between the hazard identification process and the development of controls and the adequacy of the controls established.

In several of the events analyzed, the procedures used to control or respond to conditions were found to be deficient in some way. Since in the establishment of the hierarchy of controls (elimination, engineered, administrative, or personnel protective equipment), the hazard could not be eliminated and engineered barriers had been in place, procedures become the next barrier for protection.

In no case was a control found to be inadequate because the importance of the control was not understood, and in only one case was a hazard present that was not being adequately controlled (F02).

Common Cause 1 – Hazards Control requirements have not been completely effective in ensuring identified hazards are adequately mitigated to support the performance of work within an acceptable safety envelope.

Perform Work

The Perform Work category evaluated the activities themselves. The importance of written instruction to ensure the expected response is highlighted in review of these events/findings. Procedural issues resulted in a human performance communications errors and/or a lack of communication was identified.

Also, failures in management oversight demonstrate weaknesses in line management oversight and demonstrate the presence of a management problem/error causal factor.

Common Cause 2 – Generalization of work instructions does not ensure that hazards are controlled as needed to maintain an appropriate safety envelope for the performance of work.

Feedback

The Feedback category analyzed the usage of past lessons learned for planning the work activity and the evaluation of the adequacy of corrective actions associated with the events.

Common Cause 3 – Event related breakdowns in communication reflect a common weakness in training and qualification relied upon to implement expectations.

Common Cause versus Corrective Action Review

Common Cause 1 – Hazards Control requirements have not been completely effective in ensuring identified hazards are adequately mitigated to support the performance of work within an acceptable safety envelope.

F01 - AW Tank Farm High Pressure Alarms	Ensure shift managers are briefed on the requirements of primary ventilation outage alarm response procedures. Ensure shift managers are briefed on the importance of 3-way communication including complete directions, repeat back, and acknowledgement. Review and revise ARPs associated with tank pressure and fan failure events to ensure consistent alarm response direction is provided. Evaluate and revise as necessary ARPs associated with primary ventilation outages. Ensure responses are consistent and accurate. Shift instructions issued to all shift managers providing direction for complying with all steps of applicable ARPs.
F02 – Elevated Airborne Radioactivity at 204-AR	Review and update TFC-ESHQ-RP_MON-P-09, "Grab Air Sampling," to include immediate actions and notification to the Shift Office of preliminary analysis identifying high airborne contamination levels. Provide briefing to HPTs, Radiological Control FLMs, and Shift Managers on this event and procedural changes made in action CATPR-02-01 (above).
F03 – 222-S Spread of Contamination	Revise ERP-222S-009 to clarify the entrance criteria for spills, releases, and Continuous Air Monitor (CAM) alarms. Develop procedure for preplanned actions for response to contamination in a radiological area (ATS-LO-200-110). Complete a review of Alarm Response Procedures (ARPs), Abnormal Operating Procedures (AOPs), and Emergency Response Procedures (ERPs). Perform drill(s) regarding the use of ERP-222S-009 and ATS-LO-200-110 for response to contamination in a radiological area.

Common Cause 2 – Generalization of work instructions does not ensure that hazards are controlled as needed to maintain an appropriate safety envelope for the performance of work.	
F04 – Use of General RWPs	Evaluate the implementation of requirements of HNF-5183 as they apply to General RWPs. Initiate revision to manual or RWPs per the results of the evaluation. Clarify roles and responsibilities for Industrial Hygiene management within Operations

Common Cause 3 - Event related breakdowns in communication reflect a common weakness in training and qualification relied upon to implement expectations.	
F03 – 222-S Spread of Contamination **F04 – Use of General RWPs**	Perform drill(s) regarding the use of ERP-222S-009 and ATS-LO-200-110 for response to contamination in a radiological area. Radiological Control is to perform a minimum of 2 management observations a month, focusing on compliance to the Tank Farm Radiological Control Manual (TFRCM) and a review of flow down from 10 CFR 835, "Occupational Radiation Protection," and HNF-MP-5184, "Washington River Protection Solutions Radiation Protection Program (RPP)."
F06 – IHT Training	Develop and provide a condensed abnormal and emergency response training to be provided through the IHT continuing training/re-certification process. Provide face-to-face briefings to reiterate the expectation Tank Farm, 222-S, and SST Retrieval and Closure personnel for timely identification and evaluation of conditions adverse to quality, safety, health, operability, and the environment (as required by TFC-ESHQ-Q_C-C-01, "Problem Evaluation Request." Also include expectations on the importance of a questioning attitude, conservative decision making, procedure compliance, and formal communications. Update continuing training material to include Human Performance Initiative (HPI) training. Reinforce the requirement for Shift Operations to perform one table-top drill per shift per month. The table-top drill should involve Shift personnel (Nuclear Chemical Operators (NCOs), Health Physics Technicians (HPTs), and Industrial Hygiene Technicians (IHTs), as available) and consider "what-if" situations. Scenarios to evaluate should include review of Alarm Response Procedures (ARPs), Abnormal Operating Procedures (AOPs), Emergency Response

Procedures (ERPs), etc. Communicate expectations to Shift Managers

Perform WRPS senior management oversight of Tabletop drills to monitor and ensure effectiveness. Continue oversight until satisfactory performance is achieved.

Re-emphasize an aggressive Management Observation Program (MOP) to continually perform management oversight and encourage routine feedback. Focus areas should include Conduct of Operations, Radiological Control Operations, alarm response, etc.

Establish a Conduct of Operations forum to continuously promote improvement within the TOC

GENERIC IMPLICATIONS

The results of the Problem Evaluation Request (PER) system review were used to validate the transportability of these internal and external influencing factors to other similar conditions. The outcome of this analysis indicated weaknesses in Human Performance, Management Problems, and Communications.

The top three causal codes (A-nodes) are displayed from the root cause data provided from the analysis of the findings. The chart below illustrates a concentration in the areas of *Human Performance, Management Problem, and Communication* fields contain all of the coding.

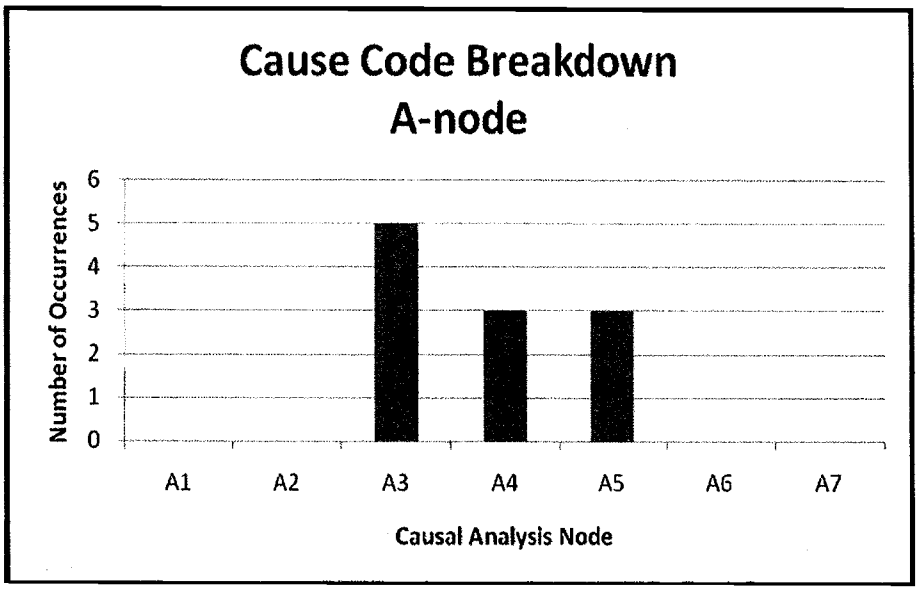

Additional detailed review was performed relationship of the causal codes to ISMS Core Function. As demonstrated below for the events evaluated the weaknesses occur in *Develop and Implement hazard Controls, Perform Work within Controls,* and *Provide Feedback and Continuous Improvement.*

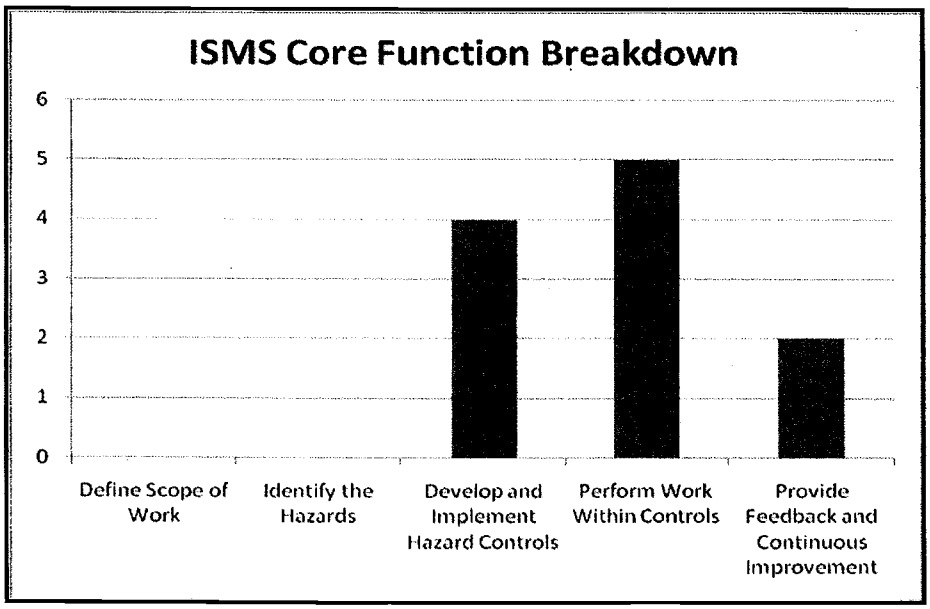

In conclusion, this review demonstrates the transportability of this coding beyond those identified to response actions for other events.

RECOMMENDED CORRECTIVE ACTIONS

The four common causes can be addressed by the following corrective actions. An end point assessment is required six-months following the completion of all corrective actions.

CC-01	Complete a review of Double-Shell Tank Pressurization related Alarm Response Procedures (ARPs), Abnormal Operating Procedures (AOPs), and Emergency Response Procedures (ERPs). Revise as necessary to ensure consistency in response actions and level of controls.
Actionee:	P. Owen
Due Date:	5/15/09
Deliverable:	Copy of evaluation and revised procedures as necessary.

CC-02	Clarify roles and responsibilities for Industrial Hygiene management within Operations to clearly identify chain of command structure during abnormal and emergency events.
Actionee:	K. Roueche
Due Date:	4/24/09
Deliverable:	Copy of communications material and course completion rosters .

CC-03	Provide face-to-face briefings to reiterate the expectation Tank Farm, 222-S, and SST Retrieval and Closure personnel for timely identification and evaluation of conditions adverse to quality, safety, health, operability, and the environment (as required by TFC-ESHQ-Q_C-C-01, "Problem Evaluation Request." Also include expectations on the importance of a questioning attitude, conservative decision making, procedure compliance, and formal communications.
Actionee:	N. Brosee
Due Date:	5/27/09
Deliverable:	Summary of briefing material and course completion rosters.

CC-04	Update operator continuing training material to include Human Performance Initiative (HPI) training.
Actionee:	L. Keith
Due Date:	7/31/09
Deliverable:	Copy of updated operator continuing training material.

CC-05	Reinforce the requirement for Shift Operations to perform one table-top drill per shift per month. The table-top drill should involve Shift personnel (Nuclear Chemical Operators (NCOs), Health Physics Technicians (HPTs), and Industrial Hygiene Technicians (IHTs), as available) and consider "what-if" situations. Scenarios to evaluate should include review of Alarm Response Procedures (ARPs), Abnormal Operating Procedures (AOPs)and Emergency Response Procedures (ERPs). Communicate expectations to Shift Managers.
Actionee:	P. Owen
Due Date:	4/24/09
Deliverable:	Issued memo of expectations to Shift Managers and tickler (see TFC-OPS-OPER-CD-30) for reminder.

CC-06	Perform at least six WRPS senior management oversight observations of Tabletop drills to monitor and ensure effectiveness. Continue oversight until satisfactory performance is achieved.
Actionee:	R. Gregory
Due Date:	7/30/09
Deliverable:	Document observations on MOP form.

CC-07	Re-emphasize an aggressive Management Observation Program (MOP) to continually perform management oversight and encourage routine feedback. Focus areas should include Conduct of Operations, Radiological Control Operations, alarm response and table-top drills.
Actionee:	N. Brosee
Due Date:	4/24/09
Deliverable:	Issued memo of expectations to MOP designated personnel.

EPA-01	Perform an end point assessment. 1. Review objective evidence from all corrective actions to ensure completeness and adequacy. 2. Assess field operations for compliance to response requirements to abnormal operating conditions since January 2009. • Review PER database for similar events. • Review MOPs for similar events. 3. Interview selected operations personnel on changes in management expectations to determine extent of assimilation of corrective actions. • Sample group should include (6) FLMs, (6) Shift Managers, (15) NCOs, (6) IHTs and (15) HPTs.
Actionee:	N. Milliken
Due Date:	2/28/2010
Deliverable:	ESRB approved End Point Assessment Report.

CONCLUSION

The corrective actions identified above are designed to prevent future recurrence. The set of actions taken, or planned, associated with the individual events may address only event specific issues and may or may not prevent recurrence. Corrective actions designed by the team will strengthen the actions already taken and will improve consistency in operations.

ATTACHMENTS

Attachment 1 – Analysis Approach
Attachment 2 – Barrier Analysis

Attachment 1
Analysis Approach

A Common Cause Analysis (CCA) allows for the causal factors associated with multiple events to be analyzed to determine potential causal factor relationships warranting further evaluation. A CCA may also address repetitive high level causal factors where corrective actions may have been too narrowly focused, only addressing symptoms unique to a specific event, but not completely effective in fixing underlying causes, and therefore not preventing similar events.

In the performance of the CCA, the following was performed:

- Data was collected
- Requirements were reviewed
- Events were decomposed
- Applicable causal factors were determined based on a historical review of events contained within the Problem Evaluation and Request (PER) database
- Personnel were interviewed, when available; and
- Barrier analysis was completed for each event.

Attachment 2
Barrier Analysis

To conduct barrier analysis, the following objective was defined as the desired end-state "operate safely."

To accomplish this objective each event was analyzed to determine which barriers were implemented and which were not and to answer the following questions.

What barriers existed to prevent the event from occurring?
What barriers were established between events to prevent recurrence?
Did the presence of any barriers mitigate or increase the severity of the event?
Were barriers not functioning as designed?
Was the barrier design adequate?
Were the barriers adequately maintained? Did they fail?
Were unwanted energies present?
What would have prevented the unwanted flow of energy?
What operating changes would have prevented the unwanted flow of energy?
Could the unwanted energy have been deflected or evaded?
Was the event foreseen?
Is it practical to have taken further steps to reduce the risk of the event occurring?
Can this reasoning be extended to other similar systems?
What additional human factors could be added?
Is there sufficient technical information for operating the component properly?
Did the environment mitigate or increase the severity of the event?
What changes might be made?
Have these changes been properly analyzed for effect?
Are expected changes cost-effective?
What would you have done differently to prevent the event?

C01 – Weakness in Emergency Response Program Implementation

What barriers existed to prevent the event from occurring?
- Written program, policies, and procedures
- Drill program

What barriers were established between events to prevent recurrence?
- Procedure reviews
- Drill performance/participation
- Assessments

Did the presence of any barriers mitigate or increase the severity of the event?
- Procedures provide actions

Were barriers not functioning as designed?
- Inconsistencies in procedures may have lead to their failure
- Knowledge of staff may also lead to inappropriate actions being taken (not entering into procedures as required

Was the barrier design adequate?
- Yes

Were the barriers adequately maintained? Did they fail?
- Frequent changes to procedures may lead to inconsistencies (lack of change management)

Were unwanted energies present?

- Hazards were recognized and controls implemented, however is some cases based biased knowledge versus indications

What would have prevented the unwanted flow of energy?

- Procedure compliance

What operating changes would have prevented the unwanted flow of energy?

- Procedure compliance

Could the unwanted energy have been deflected or evaded?

- Yes

Was the event foreseen?

- In all cases the hazards were known, if not always anticipated.

Is it practical to have taken further steps to reduce the risk of the event occurring?

- Yes, in the event of the 702-AZ spill condensate was anticipated on the waste planning checklist, but the workers were surprised by its presence.

Can this reasoning be extended to other similar systems?

- Yes

What additional human factors could be added?

- Any number of human factors could lead to a process failure. However, increased administrative barriers are designed to identify and prevent human errors.

Is there sufficient technical information for operating the component properly?

- Yes

Did the environment mitigate or increase the severity of the event?

- Yes

What changes might be made?

- Improved procedures
- Reinforced management expectation and oversight
- Drill responses

Have these changes been properly analyzed for effect?

- Yes

Are expected changes cost-effective?

- Yes

What would you have done differently to prevent the event?

- Strict procedural compliance
- Better communication
- Conservative decision making
- Compliance reviews

Failed Barrier by Event

Failed Barrier	Self Checking	Communication	Questioning Attitude Less Than Adequate	Verification – Independent
F01 - AW Tank Farm High Pressure Alarms	X	X		X
F02 – Elevated Airborne Radioactivity at 204-AR	X	X	X	X
F03 – 222-S Spread of Contamination		X	X	
F04 – Use of General RWPs		X		
F05 – 702-AZ Condensate Spill		X	X	
F06 – IHT Training				

ATTACHMENT B
EVENT AND CAUSAL FACTOR ANALYSIS

FINDING S-09-ESO-TANKFARM-003-F01

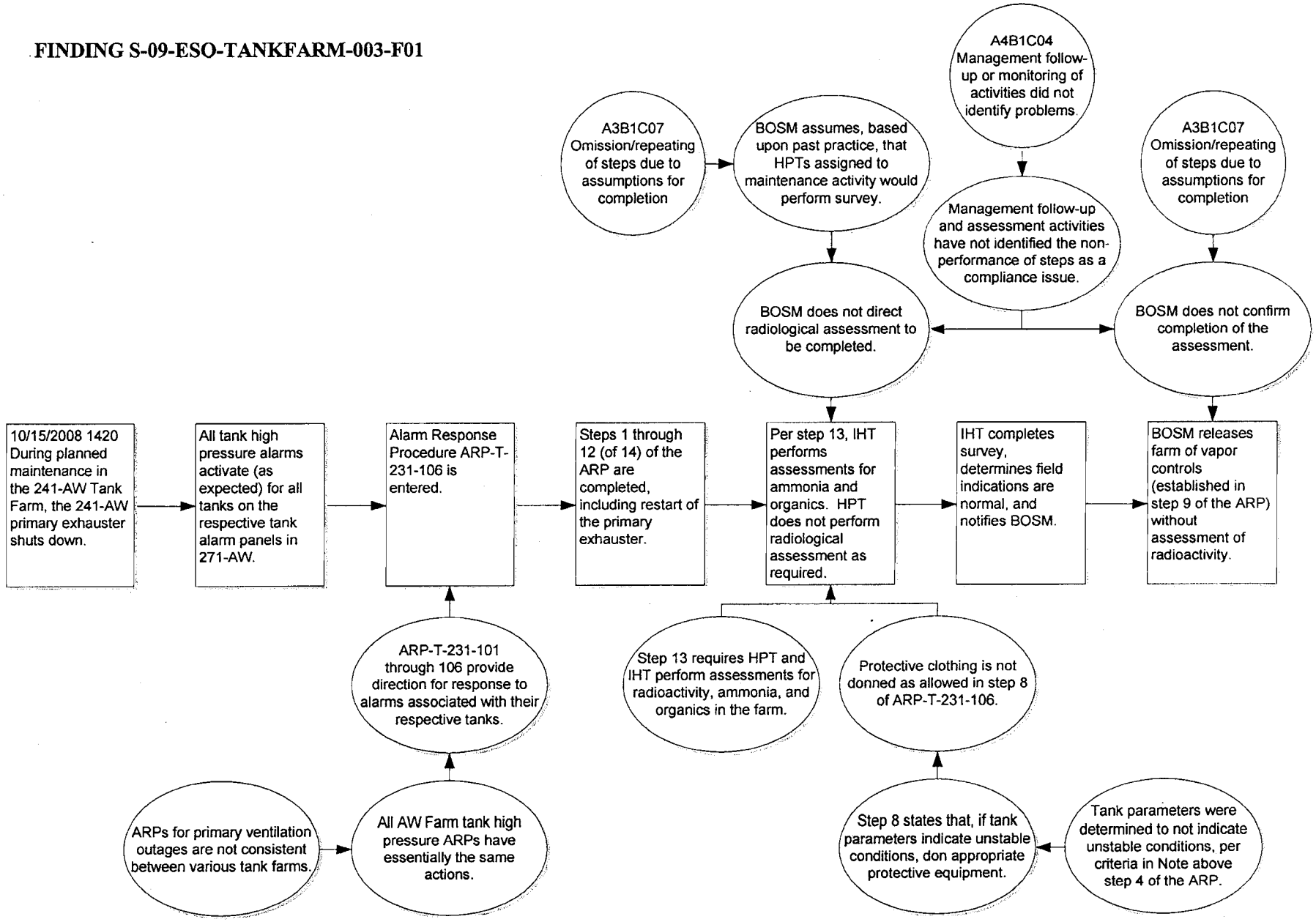

FINDING S-09-ESO-TANKFARM-003-F02

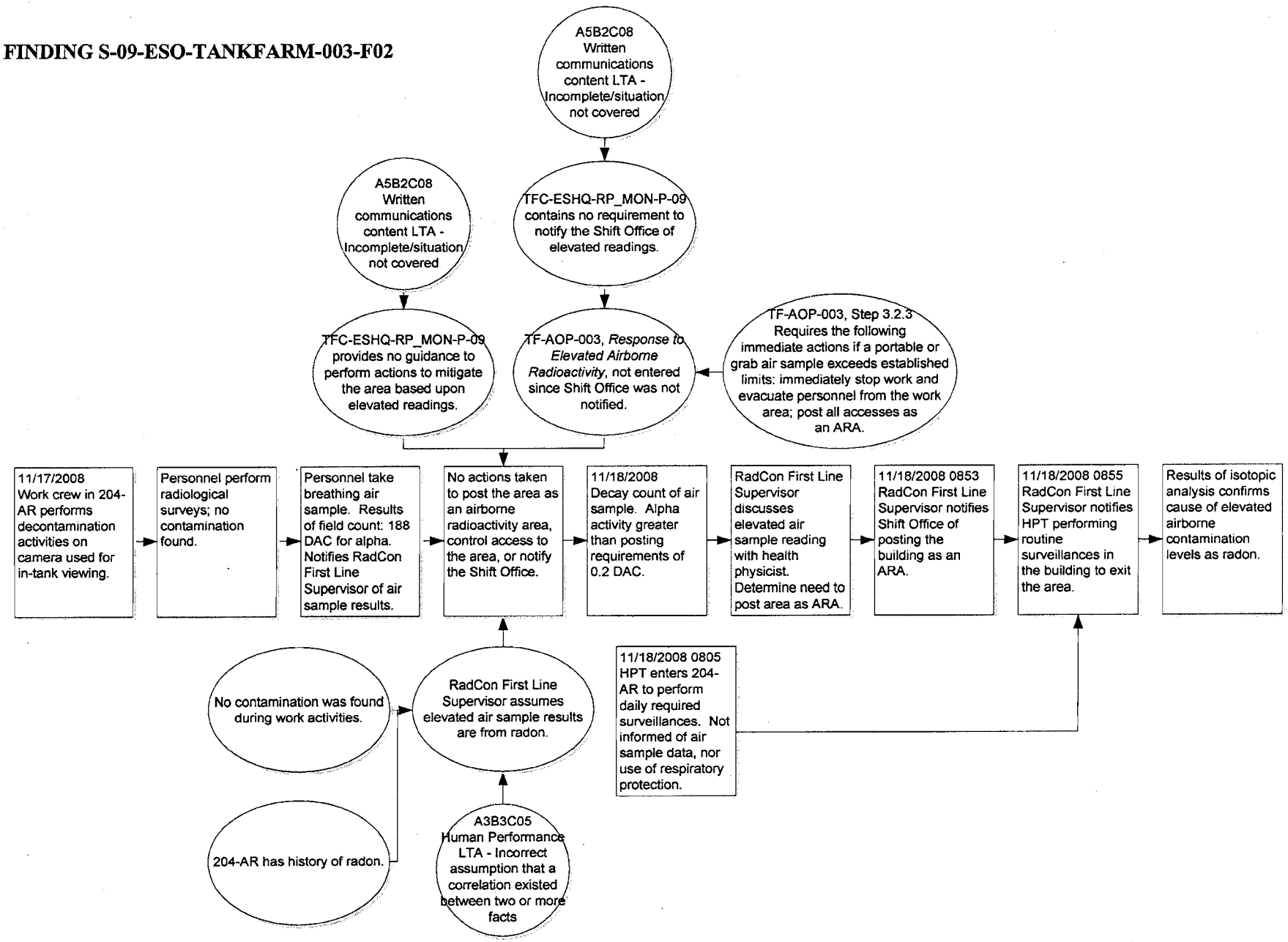

FINDING S-09-ESO-TANKFARM-003-F03

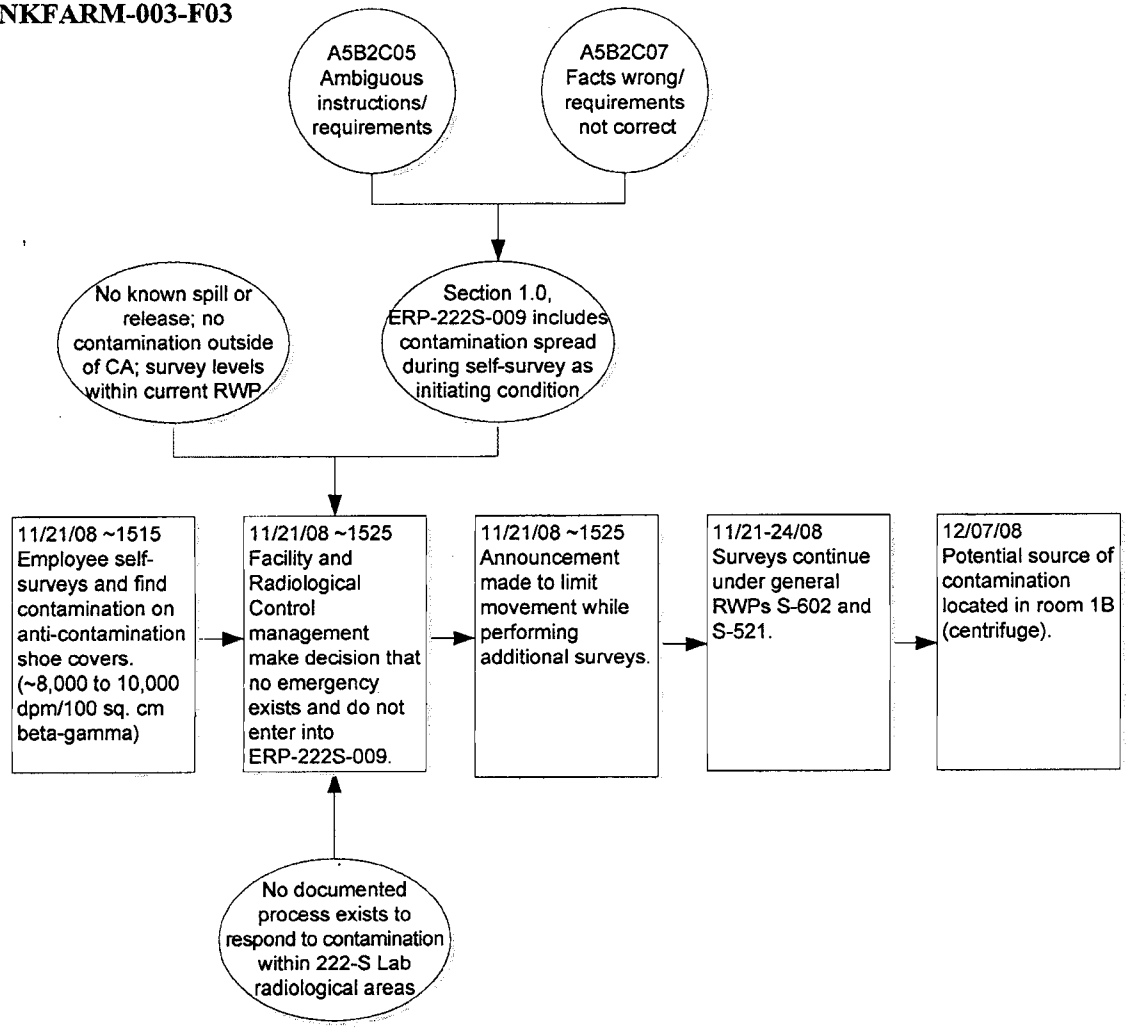

FINDING S-09-ESO-TANKFARM-003-F04

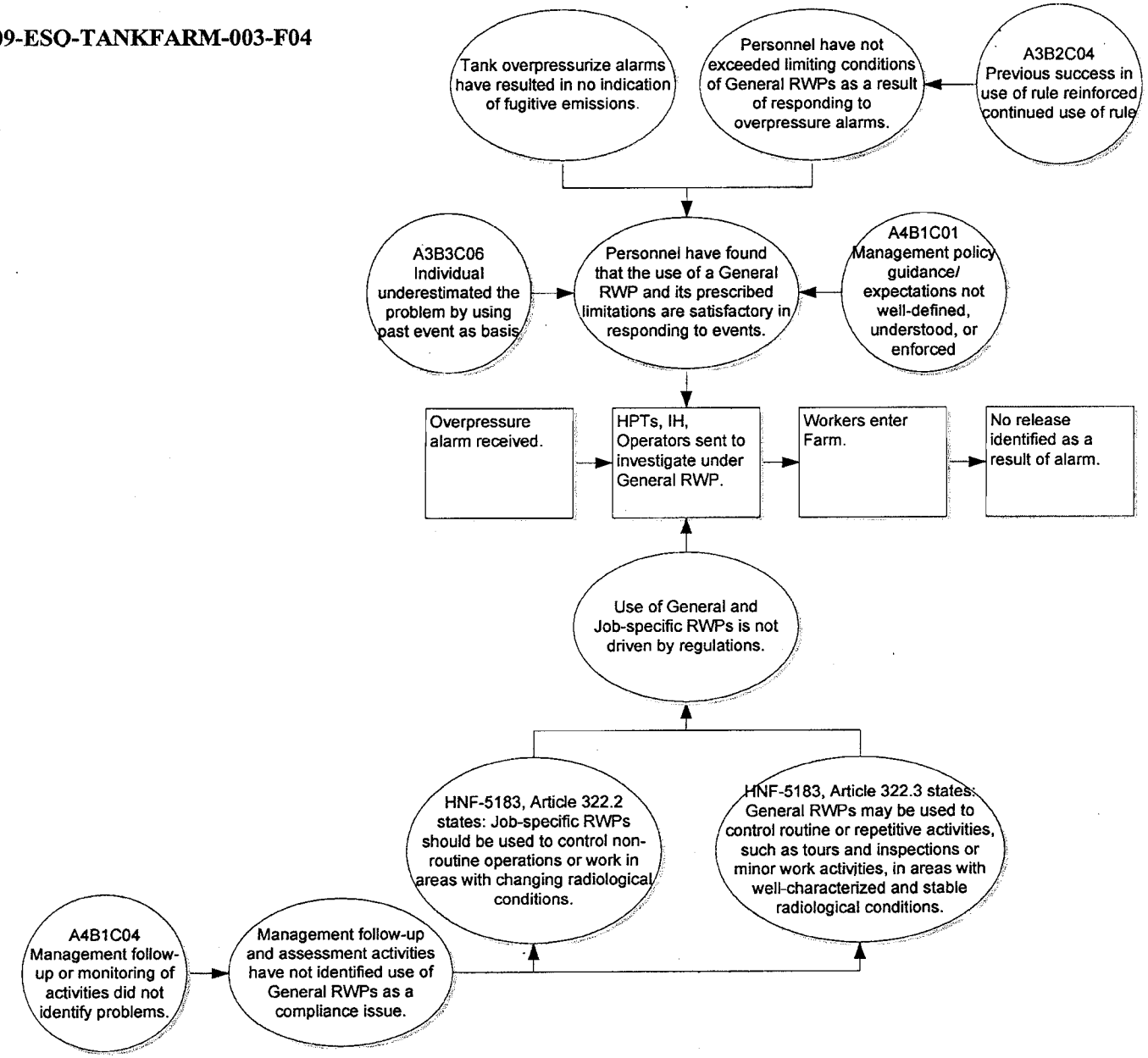

Sig PER 2009-0385
Support Doc's

SigPER WRPS-2009-0385 Briefing

Action DC-02-01: Provide briefing to HPTs and Radiological Control FLMs on this event and procedural changes made in action CATPR-02-01.

SigPER WRPS-2009-0385 Briefing

- DOE-ORP found WRPS "weak" in response to abnormal events and AOP implementation.
- One of the events identified was Base Ops RadCon did not notify Ops of ARA or control ARA.
- Other events had to do with:
  - Base Ops response to tank pressurization alarm
  - Spill response at 222-S
  - Base Ops emergency response RWPs
  - Base Ops emergency response controls
  - IH tech emergency response training

SigPER WRPS-2009-0385 Briefing

- RadCon Specific Event Background:
  - Known elevated Rn-222 background in 204-AR
  - Camera decon performed in glove-bag
  - No work related contamination spread
- RadCon Specific Deficiencies
  - Initial air sample assumed to be Rn-222
  - Did not control 204-AR
  - Did not notify Shift Office

SigPER WRPS-2009-0385 Briefing

- Procedure Changes to MON-P-09
  - 4.1.14: Perform preliminary assessment of air sample using NK/VE
  - 4.1.15.a and b: **Notify RadCon supervisor of any preliminary results greater than environmental or other action levels**; RadCon supervisor to ensure area is controlled and notify Shift Ops
  - 4.1.16: **When any action level exceeded, document NK/VE on RSR** as directed by your supervisor
  - 4.2.16-18: Same for Staplex air samples

SigPER WRPS-2009-0385 Briefing

- Air Activity in µCi/mL = NK/VE
  - $(N \times K)/(V \times E_c \times E_a \times E_f)$ where
    - N = net cpm (i.e., gross cpm minus background cpm
    - K = 1.6 E-11 conversion factor
    - V = sample volume in cubic feet (i.e., flow rate x sample time)
    - E_c = Instrument efficiency (i.e., PAM = calibration sticker value and GM = actual Cs-137 sticker value or as otherwise directed)
    - E_a = Self absorption factor for AKI oiled planchet only (i.e., 0.82 alpha and 1.0 beta)
    - E_f = Collection Efficiency; 0.78 for AKI oiled planchet and 1.0 for all others)
- Determine DAC fraction, **when required**, using Sr-90 DAC = 8 E-9 µCi/mL or Pu-239 DAC = 2 E-12 µCi/mL
- DAC Fraction = Air Activity/DAC = (NK/VE)/DAC

MEETING ATTENDANCE ROSTER

Course Title: SigPER WRPS-2009-0385 Briefing

Date Completed: 6/26/09

Location: 2704HV

Beginning Date/Time: 6/26/09

	Hanford ID (HID)	Print Name (Last, First, MI)	Signature
1	H6943915	Aikele, Steve	Steve Aikele
2	H0086227	French, Ray	RG French
3	H0021098	Huddleston, Laura	L Huddleston
4	H2244430	Lowery, Charles	Charles M. Lowery
5	H0073837	Nelson, Rod	RTB Nelson
6	H1032930	Palomarez, Janene	Janene Palomarez
7	H0070694	Robles, Brent	B Robles
8	H6473275	Rutherford, Jeremy	[illegible]
9	H0104901	Sall, Trevor	T Sall
10			
11			
12			
13			
14			
15			
16			
17			
18			
19			
20			

Instructor's Name (Printed/Signature): L Huddleston / L Huddleston

Date/MSIN: 6/26/09

BRIEFING ROSTER

Course Title	Date Completed
Sig PER 2009-0385 Briefing Action DC-02-01	
Location 272-AW	Beginning Date/Time 5-27-09 / 0715

	Hanford ID (HID)	Print Name (Last, First, MI)	Signature
1	H0052555	Abella, Angie	
2	H0000782	Anderson, Dana	
3	H0042732	Arave, Doug	
4	H0032633	Auckland, Brent	
5	H0049523	Belliston, Brian	
6	H0076141	Bishop, Bill	
7	H1607594	Bowman, Dale	
8	H0064403	Brazelton, Bill	
9	H0051034	Bricker, Bill	
10	H0071041	Calderon, Rose	
11	H0002673	Channel, Rich	
12	H0063087	Chrystal, Carrol	
13	H0009281	Clements, Bob	
14	H0070822	Cole, Ross	
15	H0026053	Crockett, Mike	
16	H2257166	Desmarais, Eric	
17	H0078730	Ellingson, Steve	
18	H0010214	Evans, Jim	
19	H0070091	Fridlund, Allen	
20	H0091316	Galliher, Alicia	

Instructor's Name (Printed/Signature)	Date/MSIN
GRANT BACHAUD	5-27-09

BRIEFING ROSTER

Course Title	Date Completed
Sig PER 2009-0385 Briefing Action DC-02-01	
Location 272-AW	Beginning Date/Time

	Hanford ID (HID)	Print Name (Last, First, MI)	Signature
21	H0073753	Hidalgo, Tim	
22	H0089699	Juliuson, Tammy	
23	H0002636	Krasner, Tom	See attached email 5/28/09 EGS
24	H0048735	Laframboise, Kathi	
25	H0056918	Landes, Claude	
26	H0052636	Landoe, Sig	
27	H0024079	Martin, Tim	
28	H0019120	May, Robin	See attached email 5/28/09 EGS
29	H0020318	Meyer, Mike	Michael B. Meyer
30	H0108535	Miers, Tad	See attached email 5/28/09 EGS
31	~~H0046568~~	~~Miller, John~~	
32	H0001832	Murphy, Mike	
33	H0073691	Niederer, Bert	
34	H0091069	Norris, Dan	
35	H0021497	Perkins, Patti	
36	H0052719	Puryear, Bill	
37	H0052778	Richter, Joe	
38	H0002204	Roberson, Bill	
39	H0091147	Roberson, Scott	Scott L. Roberson
40	H0056988	Robinson, Dexter	See attached email 5/28/09 EGS

Instructor's Name (Printed/Signature) | Date/MSIN

BRIEFING ROSTER

Course Title	Date Completed
Sig PER 2009-0385 Briefing Action DC-02-01	
Location 272-AW	Beginning Date/Time

	Hanford ID (HID)	Print Name (Last, First, MI)	Signature
41	H0061877	Scott, Darrell	Darrell Scott
42	H9306009	Stevens, Lance	
43	H0015294	Stewart, Jeff	
44	H0019033	Taylor, Troy	
45	H0027658	Toon, Jon	
46	H0008918	Valdes, Jr., Joe	
47	H0061868	Wagner, Wade	
48	H0062513	Weathers, Jessie	Jessie R. Weathers
49	H0060460	Williams, Dawn	
50			
51	H0835545	Bachaud, Grant	Grant Bachaud
52	H0059272	Meyer, Kyle	
53	H0070680	Pattee, David	David Pattee
54			
55			
56			
57			
58			
59			
60			

Instructor's Name (Printed/Signature)	Date/MSIN

Bickel, Eric E

From: Pattee, David W
Sent: Thursday, May 28, 2009 9:56 AM
To: Richter, William J (Joe); Wagner, Wade M; Belliston, Brian L; Bricker, William M; May, Robin L; Robinson, Odexter; Miers, Tad L; Krasner, Thomas
Cc: Bickel, Eric E; Bachaud, Grant C
Subject: Briefing for all of you to be aware, when on dayshift see Grant and will get you to sign the roster.
Attachments: SigPER WRPS-2009-0385 Briefing.ppt

The main point of this briefing is that the HPT is required to notify RadCon supervision if an environmental or other air sample (typically a posting level) trigger value is exceeded. The RadCon supervisor is then required to notify the Shift Office of the high air sample and verify the area is controlled pending Shift Office action. This is now an immediate notification...do not wait for radon decay. Yes, there will be many more Shift Office notifications than previously.

David

Bickel, Eric E

From: Crockett, James E (Jim)
Sent: Wednesday, May 27, 2009 9:57 AM
To: Bickel, Eric E
Subject: FW:
Attachments: Crockett.PDF

Eric,

Attached are the scanned copies of the attendance roster's on the SigPER WRPS-2008-0385 briefing held on 05/27/09. I have sent Email messages to Vince Chapman, Lisa Morris, and Marieca Davis directing them to complete the briefing on Monday when they return from PTB. I will send the attendance roster for them on Monday if they show up to work.

Also, the following personnel are unavailable for signature and should not count:

Vivian Wyant Short Term Disability since March 10th.
Becky Holland Union position located at the union hall. She does not do field work.

If you need anything else, please let me know.

Thanks
Jim Crockett

From: Kopp, Victoria L
Sent: Wednesday, May 27, 2009 9:40 AM
To: Crockett, James E (Jim)
Subject:

Vicki Kopp
Base Operations RadCon
Washington River Protection Solutions
2704HV / B112C-D / 200E / S7-05
(509) 373-9735 Office / (509) 308-8730 Cell
(509) 373-9700 Fax

WRPS ~~CH2M HILL~~ 5/27/09

ATTENDANCE ROSTER

Subject:	Date: 05/27/09
SigPER WRPS-2009-0385 Briefing	Leader: Jim Crockett

NAME (Print)	Signature	Position/Title	Organization
K. Seach		HPT	BOW
D Rodenland		HPT	Radcon
M Snyder		HPT	RadCon
Rob Taylor		HPT	Radcon
Rick Mc		HPT	BO
D NOLAND		HPT	HPT
Brad Anderson		HPT	Radcon
B. Livingston		HPT	BO
T Stirn		HPT	BO
M Gary		HPT	B.O.
Sunby		RCT	BO
JE Crockett		RC Supv	B.O.

A-6003-211 (11/05)

CH2M HILL
ATTENDANCE ROSTER

Subject:	Date: 05/27/09
SigPER WRPS-2009-0385 Briefing	Leader: Jim Crockett

NAME (Print)	Signature	Position/Title	Organization
PF Johnston	[illegible]	HPT	WRPS-BO
S. MacArthur	[illegible]	HPT	Base Ops. Rad Con
D. Mallory	[illegible]	HPT	BO
B Mayfield	B Mayfield	HPT	WRPS - BO
Linda Hall	[illegible]	HPT	"
Rob Brooks	[illegible]	HPT	B.O.
TL Mooney	[illegible]	HPT	B.O.
D.D. EDWARDS	D.D. [illegible]	HPT	BO
Jason Andrews	[illegible]	HPT	BO
WE Perry	[illegible]	HPT	BOW
ROBERT STEWART	Robert Stewart	HPT	BO
TL Hudson	[illegible]	HPT	BO
RL Stamper	[illegible]	HPT	BO
SR Garinger	[illegible]	HPT	BO
T.L. PILLING	[illegible]	FLM	B.O.
A Johnson	[illegible]	HPT	BO

A-6003-211 (11/05)

5/28/09

note:
slightly modified briefing
for 222-S labs; uses 222-S
A/S action levels & DAC's
CGS

SigPER WRPS-2009-0385 Briefing

Action DC-02-01: Provide briefing to HPTs and Radiological Control FLMs on this event and procedural changes made in action CATPR-02-01.

SigPER WRPS-2009-0385 Briefing

- DOE-ORP found WRPS "weak" in response to abnormal events and AOP implementation.
- One of the events identified was Base Ops RadCon did not notify Ops of ARA or control ARA.
- Other events had to do with:
  - Base Ops response to tank pressurization alarm
  - Spill response at 222-S
  - Base Ops emergency response RWPs
  - Base Ops emergency response controls
  - IH tech emergency response training

SigPER WRPS-2009-0385 Briefing

- RadCon Specific Event Background:
  - Known elevated Rn-222 background in 204-AR
  - Camera decon performed in glove-bag
  - No work related contamination spread
- RadCon Specific Deficiencies
  - Initial air sample assumed to be Rn-222
  - Did not control 204-AR
  - Did not notify Shift Office

SigPER WRPS-2009-0385 Briefing

- Procedure Changes to MON-P-09
  - 4.1.14: Perform preliminary assessment of air sample
  - 4.1.15.a and b: **Notify RadCon supervisor of any preliminary results greater than environmental or other action levels**; RadCon supervisor to ensure area is controlled and notify Facility Ops
  - 4.1.16: **When any action level exceeded, document results on RSR** as directed by your supervisor
    - Air sample record is part of RSR, do not need to include results elsewhere
  - 4.2.16-18: Same for Staplex air samples

SigPER WRPS-2009-0385 Briefing

- Air Activity in µCi/mL
  - When using NK/VE
  - (N x K)/(V x E_c x E_a x E_f) where
    - N = net cpm (i.e., gross cpm minus background cpm
    - K = 1.6 E-11 conversion factor
    - V = sample volume in cubic feet (i.e., flow rate x sample time)
    - E_c = Instrument efficiency (i.e., PAM = calibration sticker value and GM = actual Cs-137 sticker value or as otherwise directed)
    - E_a = Self absorption factor for AKI oiled planchet only (i.e., 0.82 alpha and 1.0 beta)
    - E_f = Collection Efficiency; 0.78 for AKI oiled planchet and 1.0 for all others)
- Determine DAC fraction, **when required**, using Sr-90 DAC = 2 E-9 µCi/mL or Pu-239 DAC = 2 E-12 µCi/mL
- DAC Fraction = Air Activity/DAC = (µCi/mL)/DAC

Bickel, Eric E

From: Kimmel, Thomas S
Sent: Wednesday, May 27, 2009 9:45 AM
To: Bickel, Eric E
Subject: RE: SigPER 2009-0385 Required Briefing

Eric

Please find an attendance roster for the below reference briefing. So far, we have completed 13 of 18 HPTs, with one on STD, three on shift and one in training. Do you need me to get the rest of them as well and forward an "updated" roster upon completion?

WRPS-PER-2009-03
85 briefing.pd...

Thomas S. Kimmel, Supervisor
222-S Radiological Controls
373-2018 / 619-6896 cell

From: Bickel, Eric E
Sent: Tuesday, May 26, 2009 8:25 AM
To: Pattee, David W; Bachaud, Grant C; Meyer, Kyle L; Pilling, Terry L; Crockett, James E (Jim); Huddleston, Laura B; Butler, J D (Dane); Kimmel, Thomas S; Lawing, Keith J
Cc: Dupaquier, James C (Jim); Brannan, Patrick B (Brad); Kopp, Victoria L
Subject: FW: SigPER 2009-0385 Required Briefing
Importance: High

<< File: SigPER WRPS-2009-0385 Briefing.ppt >>
Folks-
Please give the attached briefing this week. We need to do this to close the SigPER action due this week.

The labs will modify the presentation for their needs. The rest of us should be able to use the attached. (No comments for other than the labs were received.)

To close the PER I need a roster or verification that the information was provided to the folks. Verification could be an email to shifters or others that are on vacation this week.

Please let me know if you have questions.

Thanx

Eric E. Bickel
Certified Health Physicist (CHP)
Base Ops RadCon

Location: 274AW/B-102
MSIN: S5-07
Phone: 372.1470
Cell Phone: 521.6631
FAX: 372.3106

Bickel, Eric E

From: Kimmel, Thomas S
Sent: Wednesday, May 27, 2009 11:21 AM
To: Hatmaker, James H Jr; Louderback, Scott G; Tefft, Harold V (Smokey)
Cc: Bickel, Eric E; Kimmel, Thomas S
Subject: Briefing on WRPS-PER-2009-0385
Attachments: SigPER WRPS-2009-0385 Briefing.tsk.ppt

Importance: High

Gentlemen,

Please review the attached presentation at the beginning of your work shift and respond with the voting button that you understand the briefing. If you have any questions, please give me a call. This is in answer to a Sig-PER and needs to be completed as soon as possible.

Thank you.

Thomas S. Kimmel, Supervisor
222-S Radiological Controls
373-2018 / 619-6896 cell

Bickel, Eric E

From: Kimmel, Thomas S
Sent: Thursday, May 28, 2009 10:21 AM
To: Bickel, Eric E
Subject: Re: SigPER 2009-0385 Required Briefing

Eric,

The last three people (Hatmaker, Louderback and Tefft) have completed the review. The ONLY person I have left is Eubanks who is on STD. I will update Randy upon his return.
Thomas S. Kimmel

From: Kimmel, Thomas S
To: Bickel, Eric E
Sent: Wed May 27 11:17:26 2009
Subject: RE: SigPER 2009-0385 Required Briefing

I will do that. Additionally, I have completed the briefing with Dale Weber, (H1019929).

Thank you.

Thomas S. Kimmel, Supervisor

222-S Radiological Controls

373-2018 / 619-6896 cell

From: Bickel, Eric E
Sent: Wednesday, May 27, 2009 10:09 AM
To: Kimmel, Thomas S
Cc: Kopp, Victoria L
Subject: RE: SigPER 2009-0385 Required Briefing

Tom-

Send a notice to the shifters that they need to review the briefing before starting there next shift. Send the same email to those on vacation. Provide me documentation (copy of the email) of them receiving the notification. That could be sent separately or attached to the roster. The STD does not count...just ensure that they get it when they come back.

An updated roster should not be necessary if the above documentation is provided.

Thanx for getting this done in a timely manner...

Eric E. Bickel
Certified Health Physicist (CHP)
Base Ops RadCon

ATTENDANCE ROSTER

Course Title: WRPS-PER-2009-0385 briefing		Date Completed N/A
Location MO-028 / Conference Rm / 200 W		Beginning Date/Time 05/27/09 / 07:30

	Hanford ID (HID)	Print Name (Last, First, MI)	Signature
1	H0002964	P.B. Brannan	
2	H0000785	J. D. Butler	
3	H0001682	S. L. Hathaway	
4	H3529400	T. S. Kimmel	
5	H0048994	K. J. Lawing	
6	N/A	N/A	N/A
7	N/A	N/A	N/A
8	H0056751	J. J. Betzsold	J. Betzsold
9	H0100126	D. E. Campbell	
10	H0036354	C. L. Edmonson	Edmonson
11	H0001175	R. D. Eubanks	STD 5/28/09 COS
12	H0052569	C. S. Felder	C Felder
13	H0063153	E. W. Gray	
14	H0079785	J. H. Hatmaker	See Attached email 5/28/09 COS
15	H0062941	L. N. Hendricks	
16	H0027386	M. L. Hoodenpyle	
17	H0001817	R.D. Hudson	R Hudson
18	H1621650	S. E. Krieg	S. Krieg
19	H3376611	R. L. Lemmons	
20	H0052648	S. G. Louderback	See Attached email 5/28/09 COS

Instructor's Name (Printed/Signature) N/A	Date/MSIN N/A

ATTENDANCE ROSTER

Course Title: WRPS-PER-2009-0385 briefing		Date Completed N/A
Location MO-028 / Conference Rm / 200 W		Beginning Date/Time 05/27/09 / 07:30

	Hanford ID (HID)	Print Name (Last, First, MI)	Signature
1	H0035673	L. K. Marlin	
2	H0047372	H. T. Miller	
3	H0010693	H. V. Tefft	Sig attached email 5/26/09 [illegible]
4	H0080154	N. A. Wallis	
5	H1019929	D. H. Weber	
6			
7			
8			
9			
10			
11			
12			
13			
14			
15			
16			
17			
18			
19			
20			

nstructor's Name (Printed/Signature) N/A	Date/MSIN N/A

Task# WRPS-PER-2009-0385.1

E-STARS[R] Report
Task Detail Report
08/06/2009 1639

TASK INFORMATION			
Task#	WRPS-PER-2009-0385.1		
Subject	WRPS-PER-2009-0385; SIG; CC-01 Complete a review of Double-Shell Tank Pressurization related Alarm Response Procedures (ARPs), Abnormal Operating Proc		
Parent Task#	WRPS-PER-2009-0385	**Status**	CLOSED 06/01/2009
Reference	WRPS-PER-2009-0385	**Due**	05/26/2009
Originator	^PER CAs	**Priority**	Medium
Originator Phone		**Category**	PER
Origination Date	04/08/2009 1238	**Generic1**	None
Remote Task#		**Generic2**	None
Deliverable	PER Review	**Generic3**	None
Class	None	**View Permissions**	Global
Instructions	*No Instructions*		

ROUTING LISTS

1	Corrective Action	Inactive
	CC-01 Complete a review of Double-Shell Tank Pressurization related Alarm Response Procedures (ARPs), Abnormal Operating Procedures (AOPs), and Emergency Response Procedures (ERPs). Revise as necessary to ensure consistency in response actions and level of controls. Deliverable: Copy of evaluation and revised procedures as necessary. RESPONSIBLE MANAGER: When this corrective action is complete, enter a closure statement in E-STARS and close the E-STARS subtask. Refer to the Problem Evaluation Request procedure TFC-ESHQ-Q-C-C-01, Section 4.4 for closure documentation requirements	
	• Owen, Peter - Assign - Completed with comments - 05/13/2009 1309 *Instructions:*	
	• Gregory, Rob - Review - Concur with comments - 06/01/2009 0823 *Instructions:*	
	• ^Independent Assessment Review - Review - Withdrawn - 04/16/2009 0749 *Instructions:* Independent Assessor Review	

ATTACHMENTS

Attachments	1. 0900518_09-ESQ-082_WRPS_-_[0903111137].pdf 2. 2009-0385.11 Additional Rosters.pdf 3. ARP/AOP/ERP Evaluation 4. Concern 1 - Remedial CA, TFC-CHARTER-42.doc 5. Finding 1 - Remedial CA, Base Operations Shift Instructions 10-17-08.doc 6. Finding 1 - Remedial CA, EIR-2008-024.pdf 7. Finding 3 - Remedial CA, ATS-LO-200-110.doc 8. Finding 3 - Remedial CA, ERP-222S-009.doc 9. Finding 6 - Remedial CA, Course 35E001 ITEM Report.pdf 10. Link to PER 11. RCA/CCA Report.pdf

Task# WRPS-PER-2009-0385.1

	12. SigPER 2009-0385.11 Support Docs.pdf		
COMMENTS			
Poster	Owen, Peter - 05/13/2009 1309		
	Owen, Pete -- Completed		
	Completed a review of Double-Shell Tank Pressurization related Alarm Response Procedures (ARPs), Abnormal Operating Procedures (AOPs), and Emergency Response Procedures (ERPs) to ensure consistency in response actions and level of controls (see attached). The final ARP revision is in the reveiw and approval cycle at this time. No revisions to AOPs or ERPs were identified. This activity is complete. Pete Owen Manager, Shift Operations		
Poster	Gregory, Rob (Mata, Beth L) - 06/01/2009 0823		
	Concur		
	Reviewed and concur with closure documentation. Additionally, performed a spot check to ARPs to ensure revisions were completed. All ARPs viewed were revised 4/16/2009 to ensure consistency. BLM for REG		
Poster	^PER CAs (Steelman, Tracy L (inactive)) - 06/01/2009 1057		
	Steelman, Tracy L -- CLOSED		
	Reviewed and closed. tls 6/1/09		
TASK DUE DATE HISTORY			
Modified	04/08/2009 1238 - ^PER CAs	**New Due Date**	05/26/2009 0000
Modified	04/08/2009 1238 - ^PER CAs	**New Due Date**	03/19/2010 0000
SUB TASK HISTORY			
No Subtasks			

-- end of report --

Corrective Action CC-01 for WRPS-PER-2009-0385.1 is to complete a review of Double-Shell Tank Pressurization related Alarm Response Procedures (ARPs), Abnormal Operating Procedures (AOPs), and Emergency Response Procedures (ERPs). Revise as necessary to ensure consistency in response actions and level of controls.

The following Alarm Response Procedures (ARPs) have been revised to include directions to enter TF-AOP-021 (Abnormal Operating Procedure) for loss of tank ventilation:

ARP Number	ARP Title
AN Farm	
ARP-T-221-00101	Respond to Panel 101 Alarms at 271-AN
ARP-T-221-00102	Respond to Panel 102 Alarms at 271-AN
ARP-T-221-00103	Respond to Panel 103 Alarms at 271-AN
ARP-T-221-00104	Respond to Panel 104 Alarms at 271-AN
ARP-T-221-00105	Respond to Panel 105 Alarms at 271-AN
ARP-T-221-00106	Respond to Panel 106 Alarms at 271-AN
ARP-T-221-00107	Respond to Panel 107 Alarms at 271-AN
ARP-T-221-EXH(A)	Respond to A-Train Alarms at 241-AN VTP Exhaust Skid
ARP-T-221-EXH(B)	Respond to B-Train Alarms at 241-AN VTP Exhaust Skid
AW Farm	
ARP-T-231-00101	Respond to Panel ANN-101 Alarms at 271-AW
ARP-T-231-00102	Respond to Panel ANN-102 Alarms at 271-AW
ARP-T-231-00103	Respond to Panel ANN-103 Alarms at 271-AW
ARP-T-231-00104	Respond to Panel ANN-104 Alarms at 271-AW
ARP-T-231-00105	Respond to Panel ANN-105 Alarms at 271-AW
ARP-T-231-00106	Respond to Panel ANN-106 Alarms at 271-AW
ARP-T-231-EXH(A)	Respond to A-Train Alarms at 241-AW VTP Exhaust Skid
ARP-T-231-EXH(B)	Respond to B-Train Alarms at 241-AW VTP Exhaust Skid
AY/AZ Farms	
ARP-T-251-00015	Respond to Monitor Control System Graphic #15 Primary Vent Alarms
ARP-T-251-00017	Respond to Monitor Control System Graphic #17 Primary Exhaust Alarms
ARP-T-251-00018	Respond to Monitor Control System Graphic #18 Primary Vent Stack Alarms
AP Farm	
ARP-T-271-00101	Respond to Panel 101 Alarms at 271-AP
ARP-T-271-00102	Respond to Panel 102 Alarms at 271-AP
ARP-T-271-00103	Respond to Panel 103 Alarms at 271-AP
ARP-T-271-00104	Respond to Panel 104 Alarms at 271-AP
ARP-T-271-00105	Respond to Panel 105 Alarms at 271-AP
ARP-T-271-00106	Respond to Panel 106 Alarms at 271-AP
ARP-T-271-00107	Respond to Panel 107 Alarms at 271-AP
ARP-T-271-00108	Respond to Panel 108 Alarms at 271-AP
ARP-T-271-HVAC	Respond to Panel HVAC Alarms at 271-AP

ARP Number	ARP Title
ARP-T-271-RM	Respond to Panel Radiation Monitor Alarms at 271-AP
SY Farm	
ARP-T-431-00003	Respond to Alarms at SY-241 A-Train Primary Exhauster
ARP-T-431-00004	Respond to Alarms at 241-SY B-Train Primary Exhauster
ARP-T-431-00101	Respond to Alarms in the 241-SY-271 Instrument Building (being routed for approval at this time – 5/13/09)

The following Abnormal Operating Procedures (AOPs) were reviewed to ensure consistency and identify any contradictions. The procedures appeared to be consistent and no contradictions were found. TF-AOP-003, "Response to Elevated Airborne Radioactivity", is in the process of being cancelled as the actions required by this AOP are covered in TF-AOP-021 and applicable work package instructions.

AOP Number	AOP Title
TF-AOP-011	Response to Chemical and/or Radiological Events
TF-AOP-015	Response to Reported Odors or Unexpected Changes to Vapor Conditions
TF-AOP-020	Response for Placing Personnel and Equipment in a Safe Condition
TF-AOP-021	Response to Tank Farm Ventilation Upset

The following Emergency Response Procedures (ERPs) were reviewed to ensure consistency and identify any contradictions. The procedures appeared to be consistent and no contradictions were found.

ERP Number	ERP Title
TF-ERP-001	Emergency Response Procedure 001 Take Cover / Personnel Accountability / and Area Evacuation
TF-ERP-005	Emergency Response Procedure 005 Radioactive Release
TF-ERP-013	Emergency Response Procedure 013 Tank Farm Worker Emergency Response

Task# WRPS-PER-2009-0385.2

E-STARS[R] Report
Task Detail Report
08/06/2009 1640

TASK INFORMATION			
Task#	WRPS-PER-2009-0385.2		
Subject	WRPS-PER-2009-0385; SIG; CC-02 Clarify roles and responsibilities for Industrial Hygiene management within Operations to clearly identify chain of com		
Parent Task#	WRPS-PER-2009-0385	**Status**	CLOSED 05/04/2009
Reference	WRPS-PER-2009-0385	**Due**	05/05/2009
Originator	^PER CAs	**Priority**	Medium
Originator Phone		**Category**	PER
Origination Date	04/08/2009 1238	**Generic1**	None
Remote Task#		**Generic2**	None
Deliverable	PER Review	**Generic3**	None
Class	None	**View Permissions**	Global
Instructions	*No Instructions*		

ROUTING LISTS		
1	Corrective Action	Inactive
	CC-02 Clarify roles and responsibilities for Industrial Hygiene management within Operations to clearly identify chain of command structure during abnormal and emergency events. Deliverable: Copy of communications material and course completion rosters . RESPONSIBLE MANAGER: When this corrective action is complete, enter a closure statement in E-STARS and close the E-STARS subtask. Refer to the Problem Evaluation Request procedure TFC-ESHQ-Q-C-C-01, Section 4.4 for closure documentation requirements	
	• Roueche, Kim A - Assign - Completed with comments - 04/24/2009 1659 *Instructions:*	
	• Gregory, Rob - Review - Concur with comments - 04/27/2009 1500 *Instructions:*	
	• ^Independent Assessment Review - Review - Withdrawn - 04/16/2009 0749 *Instructions:* Independent Assessor Review	

ATTACHMENTS	
Attachments	1. 0385.2 Course Completion Rosters.pdf 2. 0900518_09-ESQ-082_WRPS_-_[0903111137].pdf 3. 2009-0385.11 Additional Rosters.pdf 4. Concern 1 - Remedial CA, TFC-CHARTER-42.doc 5. Finding 1 - Remedial CA, Base Operations Shift Instructions 10-17-08.doc 6. Finding 1 - Remedial CA, EIR-2008-024.pdf 7. Finding 3 - Remedial CA, ATS-LO-200-110.doc 8. Finding 3 - Remedial CA, ERP-222S-009.doc 9. Finding 6 - Remedial CA, Course 35E001 ITEM Report.pdf 10. CC-02 Clarify roles and responsibilities for Industrial Hygiene management within Operations to clearly identify chain of comman 11. Link to PER 12. RCA/CCA Report.pdf

Task# WRPS-PER-2009-0385.2

	13. SigPER 2009-0385.11 Support Docs.pdf		
COMMENTS			
Poster	Roueche, Kim A - 04/24/2009 1659		
	Completed		
	CC-02 Clarify roles and responsibilities for Industrial Hygiene management within Operations to clearly identify chain of command structure during abnormal and emergency events. After reviewing the RCA/CCA Report to clarify and understand the action, communication was provided to exempt staff and evidence is located in the attachments. Closed KA Roueche 4/24/09		
Poster	Gregory, Rob (Mata, Beth L) - 04/27/2009 1500		
	Concur		
	Reviewed and concur with the closure statement and associated closure documentation. BLM for REG		
Poster	^PER CAs (Steelman, Tracy L (inactive)) - 05/04/2009 0936		
	Steelman, Tracy L -- CLOSED		
	Reviewed and closed. tls 5/4/09		
TASK DUE DATE HISTORY			
Modified	04/08/2009 1238 - ^PER CAs	**New Due Date**	05/05/2009 0000
Modified	04/08/2009 1238 - ^PER CAs	**New Due Date**	03/19/2010 0000
SUB TASK HISTORY			
No Subtasks			

-- end of report --

SAFETY MEETING ATTENDANCE ROSTER

Course Title	Date Completed
April Safety Mtg / Staff Mtg	4/13/09
Location	**Beginning Date/Time**
274 AW Room 17	

	Hanford ID (HID)	Print Name (Last, First, MI)	Signature
1	h0033631	Adams, Wendy L	
2	H0565990	Gustafson, Kevin A	
3	H0047818	Woods, Tom, J	
4	H1662900	Perkins, Randall S	
5	H0013569	Cleveland, Evan D.	
6	0080354	O'Neal M.L.	
7	H0172630	LAWS, ALAN S	
8	0103233	SANT, STEVEN, J	
9	H0067364	WOODCOCK MICHAEL T	
10	H0047453	Horner Randy L	
11	H0093637	Eikenberry, Vince	
12	H0032313	Hibbert, Kirk R.	
13	H1856408	Cranston, Mark, D	
14			
15			
16			
17			
18			
19			
20			

Instructor's Name (Printed/Signature)	Date/MSIN
Kim Roueche / Kim Roueche	4/13/09 HPO 55-12

SAFETY MEETING ATTENDANCE ROSTER

Course Title: April Safety Mtg / Staff Mtg

Date Completed: 4/13/09

Location: 274 AW Room 17

Beginning Date/Time:

	Hanford ID (HID)	Print Name (Last, First, MI)	Signature
1	H0068780	ROHNER, JANET J	Janet Rohner
2	H0191620	Sullivan, William J	[illegible]
3	H558/485	MERRILL, DARREN L	[illegible]
4	H7643776	RANDOLPH, JASON.	[illegible]
5	H0092062	Flowers, Lon R.	[illegible]
6	H0066856	Brunson Jeff R	[illegible]
7	H0082163	Roy Graham	[illegible]
8			
9			
10			
11			
12			
13			
14			
15			
16			
17			
18			
19			
20			

Instructor's Name (Printed/Signature): Kim Rouche / Kim Rouche

Date/MSIN: 4/13/09 S5-12

From: Roueche', Kimberly A
Sent: Friday, April 24, 2009 12:39 PM
To: Merrill, Darren L; Adams, Wendy L; Flowers, Lon A; Cranston, Mark D; Randles, Jason J; Fogg, Robin J
Subject: FW: Staff Meeting Notes
The following highlights some of the points and expectations that we discussed in our last staff meeting on 4/13

Management Expectations:

- Procedure compliance is mandatory. This is what keeps us within our safe operating envelope and keeps our people safe. An approved procedure is any procedure, plan, instruction, or other document that authorizes field activities. Don't allow yourself to be talked into something. Discussed Pete Owen's message - provided handouts.

- Recognize when you are in an event and outside the approved scope of work.

- Use the SME in our Central Program Groups. Their primary job is to provide subject matter advise and direction, use them when you need additional clarification on a particular subject.

- We must use conservative decision making. Although something may seem obvious to us that a hazard does not exist, we must take the necessary actions to ensure our workers are adequately protected and that proper documented hazard analysis has been performed. Discussed Neil and Rob's message on conservative decision making.

- Notify management when things don't appear to be right. There seems to be a lack of willingness to stop and back out when things don't seem right. Please take the time to become familiar with your procedures and make sure that we are following them. If you believe changes are needed, we will notify our programs group and request the change. If you find yourself thinking "how and I going to explain this", you know you are making the wrong decision.

- Please do not leave open ended surveillance reports, please state the corrective action. If a PER is warranted, write it. Make sure we list what action was taken to close the issue. If IH monitoring is warranted, send a request to the work management or notify the FWS so he can make the necessary changes to his work package.

- We are going to be overseeing a lot of work, particularly with new subcontractors and new personnel. We cannot afford to overlook something or let something go.

- Do not rely on EAPC walkthroughs, we need to make sure we are getting out to the field doing our own inspections and surveillances. Do not be afraid to document non-compliance, we are commissioned to do so, and expected to self identify.

Task# WRPS-PER-2009-0385.3

E-STARS[R] Report
Task Detail Report
08/06/2009 1641

TASK INFORMATION			
Task#	WRPS-PER-2009-0385.3		
Subject	WRPS-PER-2009-0385; SIG; CC-03 Provide face-to-face briefings to reiterate the expectations for Tank Farm, 222-S, and SST Retrieval and Closure person		
Parent Task#	WRPS-PER-2009-0385	**Status**	CLOSED 06/01/2009
Reference	WRPS-PER-2009-0385	**Due**	06/07/2009
Originator	^PER CAs	**Priority**	Medium
Originator Phone		**Category**	PER
Origination Date	04/08/2009 1238	**Generic1**	None
Remote Task#		**Generic2**	None
Deliverable	PER Review	**Generic3**	None
Class	None	**View Permissions**	Global
Instructions	*No Instructions*		

ROUTING LISTS

1	Corrective Action	Inactive
	CC-03 Provide face-to-face briefings to reiterate the expectations for Tank Farm, 222-S, and SST Retrieval and Closure personnel for timely identification and evaluation of conditions adverse to quality, safety, health, operability, and the environment (as required by TFC-ESHQ-Q_C-C-01, "Problem Evaluation Request.") Also include expectations on the importance of a questioning attitude, conservative decision making, procedure compliance, and formal communications. Deliverable: Summary of briefing material and course completion rosters. RESPONSIBLE MANAGER: When this corrective action is complete, enter a closure statement in E-STARS and close the E-STARS subtask. Refer to the Problem Evaluation Request procedure TFC-ESHQ-Q-C-C-01, Section 4.4 for closure documentation requirements	
	• Brosee, Neil - Assign - Completed with comments - 06/01/2009 0928 *Instructions:*	
	• Gregory, Rob - Review - Concur with comments - 06/01/2009 0930 *Instructions:*	
	• ^Independent Assessment Review - Review - Withdrawn - 04/16/2009 0749 *Instructions:* Independent Assessor Review	

ATTACHMENTS

Attachments	1. 0900518_09-ESQ-082_WRPS_-_[0903111137].pdf 2. 2009-0385 CA3 Briefing Material.pdf 3. 2009-0385 CA3 Rosters.pdf 4. 2009-0385.11 Additional Rosters.pdf 5. Concern 1 - Remedial CA, TFC-CHARTER-42.doc 6. Finding 1 - Remedial CA, Base Operations Shift Instructions 10-17-08.doc 7. Finding 1 - Remedial CA, EIR-2008-024.pdf 8. Finding 3 - Remedial CA, ATS-LO-200-110.doc 9. Finding 3 - Remedial CA, ERP-222S-009.doc

Task# WRPS-PER-2009-0385.3

	10. Finding 6 - Remedial CA, Course 35E001 ITEM Report.pdf 11. Link to PER 12. RCA/CCA Report.pdf 13. SigPER 2009-0385.11 Support Docs.pdf		
COMMENTS			
Poster	Brosee, Neil (Mata, Beth L) - 06/01/2009 0928		
	Completed		
	A series of briefings were performed with Base Operations personnel. Briefing topics included the timely identification of issues, questioning attitude, conservative decision making, procedure compliance, lessons learned, and formal communications. Course completion rosters and a copy of briefing material has been attached to the ESTAR task.		
Poster	Gregory, Rob (Mata, Beth L) - 06/01/2009 0930		
	Concur		
	Reviewed and concur with closure. BLM for REG		
Poster	^PER CAs (Steelman, Tracy L (inactive)) - 06/01/2009 1100		
	Steelman, Tracy L -- CLOSED		
	Reviewed and closed. tls 6/1/09		
TASK DUE DATE HISTORY			
Modified	04/08/2009 1238 - ^PER CAs	**New Due Date**	06/07/2009 0000
Modified	04/08/2009 1238 - ^PER CAs	**New Due Date**	03/19/2010 0000
SUB TASK HISTORY			
No Subtasks			

-- end of report --

Focus

Safety
is
Radon
IH
*

Event Recognition {ARP, AOP, EAL}
Conservative Decisions
Lo\To
"Role of ISM - Identify All Hazards"
"OHC"

Quality

Attention-to-Detail
Looking Ahead
PJB's, G/P #7
R²A²
Logs -

TEAMWORK

"Check + Balance"

Schedule
Priorities
Ownership

Prompt Response
Proper Notifications

Cost

Process · Effectiveness
· Interfaces

Discipline Operations

Personal Accountability
Chain of Command (MOU)
Worker Involvement

Technical Inquisitiveness
"Expected" Results
Turnover - Detail ("why")
"Accepted" Condition

Procedure Compliance
Looking-Ahead, Pre-Planning
≠ Blind Adherence
≠ Malicious Compliance

Willingness to Stop

4.1.09

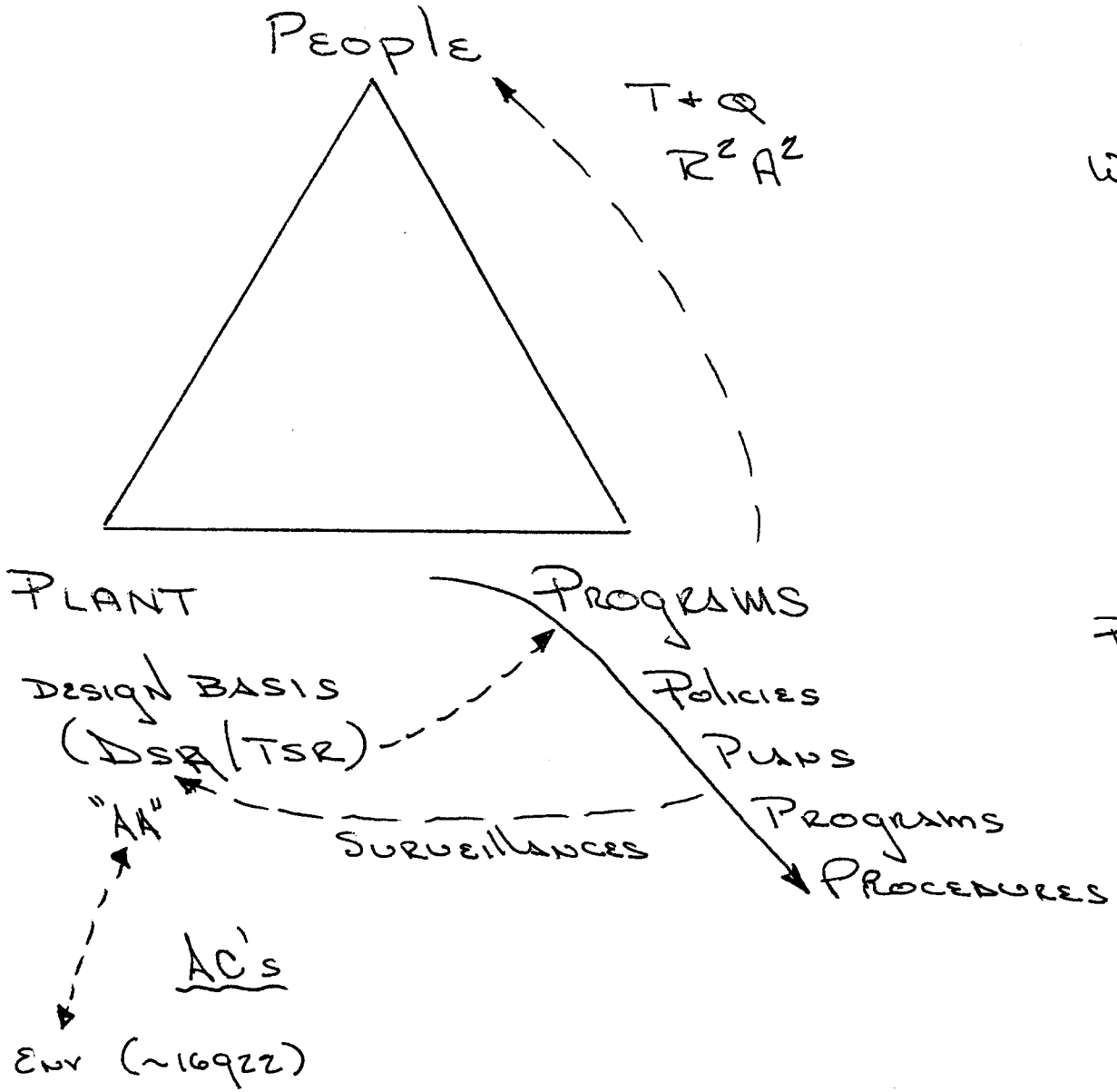

Watchstanding
"Panel", Rover
Logs/Roundsheets - Clarity
- Detail

Communication
Chain-of-Command
formality (3-way)

Process Control Plan
Waste Compatability
> Process Memo *

Monitoring Plans
Radcon
IH

Work Control & ops Authorization

4.1.99

Conduct of Operations

An Introduction

By Chuck Ames IWCP/CONOPS Coach

When you hear the term Conduct of Operations, what do you think? How often do we hear that term, and in what context? Most of the time, we hear the term being used to express negative results (e.g., a procedure is wrong – Conduct of Operations failure; a step is missed – Conduct of Operations failure; the basis document is wrong – Conduct of Operations failure.) Sometimes we do hear a positive use – "that group has good conduct of operations." But what does all of this mean to us? We can't see, hear, or feel conduct of operations. We also may not have a clear picture of what good conduct of operations looks like. After all, it is difficult to achieve our goal if we do not have a clear picture of the end product. Hopefully, this introduction provides a better understanding of what Conduct of Operations is, and how we can all use it to perform our work better.

In reality, conduct of operations is a philosophy in how we choose to do our work. It is much like Integrated Safety Management in that conduct of operations is defined by a highly disciplined approach to job description, hazards analysis and controls, work performance, and review and feedback. The basis for the philosophy, or value, is well-defined roles and responsibilities, accountability at all levels, technical inquisitiveness and ownership. All of us use these tenets in dealing with our personal lives: how we spend our money, how we take care of our vehicle and how we raise our children. The same thing applies at work. When we have a clear understanding of our role, and we own our area and actions, then conduct of operations naturally improves. Again, it is based upon our willingness to understand and follow the rules that are in place and to stop when necessary for our safety, our co-worker's safety and the public's safety.

Conduct of Operations is prescribed for the Hanford Site in DOE Order 5480.19. This order is separated into 18 distinct chapters related to each phase of business, from organization to temporary labels. These requirements have been further defined for use at Washington Closure Hanford in CONOPS-1. Additionally, these requirements are heavily intertwined with the Integrated Safety Management System, the Voluntary Protection Program, Human Performance Improvement and the Integrated Work Control Program. When you perform your work under the values of Conduct of Operations, you are being successful in all of these areas.

So in the future, when someone uses the term "Conduct of Operations" you will know that this term means:

- I know who is in charge at my work location
- I count on those in charge to provide me with the training, tools and procedures to be successful
- I will always comply with the safety requirements that are established
- I understand and know my role in completing my work
- I am trained to do the work to which I am assigned

- I am provided a procedure to use and am familiar with the procedure steps
- I use that procedure in a thinking, compliant manner
- I will question all activities, regardless of how routine, to make sure nothing has changed and I can still do the work as outlined
- I know when the procedure is wrong and will stop the work to have it fixed before continuing
- I will routinely evaluate my work to identify areas for continuous improvement
- I will stop any work or activity that presents an immediate hazard to life and health
- Others can count on me to do my work safely, properly and efficiently
- I own the work I do and do not abdicate accountability for actions that I take.

Conduct of Operations is truly a value that each of us brings to the work site. It is this value that keeps us safe, keeps our co-workers safe, keeps the environment protected, gets the job done right and on schedule and makes everyone a more effective member of the team. After all, Conduct of Operations believes that safety, quality, productivity and efficiency are common goals which can be successfully achieved.

AL Bicycle -

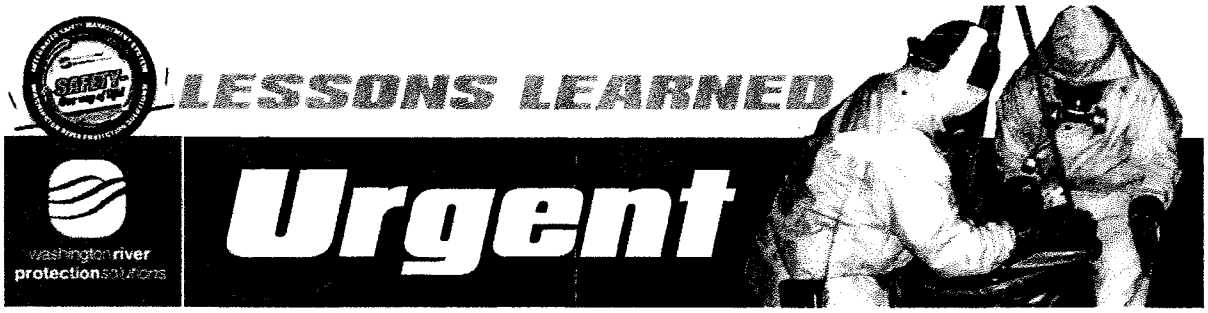

Date: April 6, 2009	http://tfc.rl.gov/rapidweb/chg/rppll/	**Number:** IB-09-027

Subject: Employee Fell Off Bicycle and Fractured Rib

Lessons Learned Statement: Employees should inspect bicycles prior to riding and should not ride bicycles with known mechanical problems.

Discussion: On February 26, 2009, an employee was using a bicycle to go between buildings. The employee stopped at a stop sign. When accelerating from the complete stop the chain slipped from the sprocket (not the first time for this bicycle) causing the employee to fall and land hard on his right side.

The employee walked to plant medical where he was diagnosed with a bruised rib and abrasions to his right knee, shoulder, and elbow. Two days later the employee was in intense pain in the chest area whenever he sneezed. The employee went to a local Urgent Care Facility where an x-ray revealed a broken rib. The employee was given an anti-inflammatory drug and an elastic "girdle" to help his rib remain stationary.

Analysis: The employee knew that the chain periodically jumped the sprocket on the bicycle assigned to him. The employee thought that he could still ride the bicycle because he had ridden it in the past when the chain jumped the sprocket with no incident.

HPI Error Precursors:

- Task Demands:
  - Irrecoverable acts
- Individual Capabilities
  - "Unsafe" attitude for critical tasks
- Human Nature:
  - Assumptions
  - Complacency/Overconfidence
  - Mind set
  - Inaccurate risk perception

ISMS Expectations:

- E1 – Perform all work safely using the five core functions of the ISMS system.
- E4 – Demonstrate a questioning attitude. If something doesn't seem right it probably isn't.
- M1 – Set, demonstrate and enforce high standards of ISMS performance with emphasis on safety, quality, mission progress, procedure compliance, and personal conduct.

Actions/Recommendations: Employees should ensure that their bicycle is in good condition before riding it and should never ride it when there is a known mechanical failure. Bicycles with known mechanical failures should be taken to plant maintenance for repairs.

References: N/A

Originator: NNSA Pantex Site Office, Rick Haynes 806-477-7560

Keywords: Bicycle, Maintenance, Fall

Distribution: WRPS Employees and Subcontractors

242-A Evaporator SSW

1. SSW will be established with four people on rotating ABCD, 8 hour shifts (see attached schedule)
    - Rotating 8 hour shifts will enable each SSW stander to observe each 12 hour rotating shift
    - Rotating 8 hour shifts will allow for easier observation of operating crew shift turnovers
    - Limiting the number of people performing SSW will allow for consistency and improve in communications between SSW's
2. The following have been assigned to be primary SSW's:
    - Fred Schmorde A-Shift
    - Ron Tucker B-Shift
    - Jim Badden C-Shift
    - Jerry Borrowman D-Shift
3. Schedule training and vacations have been reviewed to minimize the need for backfill
    - Backfill will be needed on 4-08-09 Days (if needed), 4-17-09 Graves, and 5-19-09 Days
    - Personnel who are authorized to cover as SSW for previously scheduled training and vacations are:

        -Rob Gregory
        -Tammy Reynolds
        -Pete Owen
        -Bill Parnell
    - For unforeseen absences and backfills are not available then the two on duty SSW's will hold over 4 hours and come in early 4 hours
    - In the event of a long term absence contact Tammy Reynolds for resolution
4. SSW Expectations
    - Conduct SSW in accordance with TFC-OPS-OPER-C-08, Section 4.4
    - Maintain SSW log
    - Complete SSW Turnover Sheets
    - Complete MOP and write PER if applicable
    -
    - Observe Conduct of Operations with attention to the requirements of TFC-OPS-OPER-C-08, Section 4.0, such as:

        -Authority to operate equipment/Lines of Authority
        -Procedure compliance
        -Communications
        -Operations Action for Performing Rounds
        -Temporary Round Sheets
5. Lines of Authority are:
    - 242-A SM
    - BO SSM

Bring issues to the immediate attention of the 242-A SM for immediate correction and if appropriate to the SM and higher level management.

4.1.09

Lessons Learned

242-A Slurry Sampling

Subject: Approved procedure not fully complied with while preparing to obtain slurry samples at the 242-A Evaporator.

Lessons Learned Statement: All activities must be performed in strict compliance with all procedures at all times. If an activity cannot be performed per procedure the activity must be stopped, the workplace placed in a safe configuration and the procedure must be changed before continuing regardless of the impact to facility operations.

Discussion: On Tuesday, 03/24/09, a work crew was scheduled to obtain slurry samples from the recirculation loop at the 242-A Evaporator using Plant Operating Procedure TO-630-001. The inside crew initiated entry to the Sampler Room. The inside FWS radioed the outside FWS that they weren't getting raw water to the slurry sampler and the outside crew began investigating the raw water valve line-up in the AMU Room. The on-duty 242-A Shift Manager (SM1) and another 242-A Shift Manager who did not have the watch (SM2) reported to the AMU Room to provide assistance. The raw water valve line-up was checked and verified to be correct per procedure TO-630-001. It was noted that the water pressure on the inlet side of raw water filter F-RW-3 in the AMU Room was reading ~80 psi and the outlet side was reading ~20 psi, indicating possible plugging of F-RW-3. SM2 requested permission from SM1 to open F-RW-3 bypass valve RWV-6 to check for plugging of F-RW-3. SM1 authorized opening of RWV-6, RWV-6 was opened and raw water flow was obtained to the slurry sampler. The inside FWS stated they were going to continue with slurry sampling. SM1 informed the outside FWS that the procedure did not allow sampling to continue with F-RW-3 bypassed and directed SM2 to shut bypass valve RWV-6 and directed the outside FWS to shut down the job. Valve RWV-6 was closed and the outside FWS notified the inside FWS and slurry sampling was terminated.

Pipefitters changed the filters in F-RW-3 at 1452 hours on 03/24/09. Prior to valving in the filter to check for leaks SM1 contacted the inside FWS to verify the as-left raw water valving at the slurry sampler. The inside FWS stated raw water valves at the slurry sampler were closed and it was safe to valve in raw water at F-RW-3. The filter was valved in and no leaks were found but flow was observed on raw water totalizer FQI-F-H-1. Since it was reported that the slurry sampler was isolated and no raw water flow should be occurring SM1 directed that F-RW-3 be isolated. The cause of the raw water flow was unknown and SM1 suspected that even though the inside FWS stated that slurry sampler raw water valves were closed there was a possibility that one was left open.

Slurry sampling was again scheduled for 03/25/09. While performing raw water valving in the AMU Room, a NCO requested SM1 report to AMU. This NCO was present for the F-RW-3 filter change on the previous day and was aware that raw water flow occurred when F-RW-3 was valved in. The NCO explained to SM1 that while performing the raw water valve line-up per section 5.1.9 of T0-630-001 if all valves were opened that raw water flow would occur. The NCO stated he was concerned that there could be raw water flow into the sampler while the crew was entering the Sampler Room. The NCO stated that members of the work crew had discussed it and wanted to wait until the work crew entered the Sampler Room before opening valve RWV-11. This way the inside crew could immediately notify the outside crew if raw water flow was unexpectedly discovered in the Sampler Room or in the slurry sampler. SM1 concurred and valve RWV-11 was left closed at that time.

The inside crew entered the Sampler Room at 0950 hours. At 1010 hours the inside FWS requested valve RWV-11 be opened to allow raw water to the slurry sampler. The slurry sampler received raw water but raw water flow was observed on FQI-F-H-1 with slurry sampler raw water valves closed. Several 242-A personnel began investigating the cause of raw water flow including SM1, SM2, another 242-A SM and Engineering. Drawings were reviewed and it was determined that it was possible for raw water to flow through slurry sampler valves HV-F2-2 and HV-F2-5. The inside crew verified that valves HV-F2-2 and HV-F2-5 were closed. At 1022 hours SM1 directed the NCO to shut valve RWV-11 to stop raw water flow. At 1030 hours SM1 directed that the slurry sampling job be terminated. At 1046 hours an Engineer detected a slight level rise in the C-A-1 vessel corresponding with the time raw water flow was observed. It was later determined that valve HV-F2-5 was partially open allowing raw water into the C-A-1 vessel.

Analysis:

- Opening F-RW-3 bypass valve RWV-6 to check for plugging was a sound troubleshooting decision but was not authorized by procedure TO-630-001. When it was discovered that no raw water flow was observed at the slurry sampler after all steps in TO-630-001 were followed up to that point work should have been stopped, the workplace placed in a safe configuration and work should not have continued until the cause was determined.
- The decision not to open valve RWV-11 while performing step 5.1.9 was made out of concern for the safety of the inside crew entering the Sample Room. Not opening valve RWV-11 was a sound decision based on operational knowledge but was not authorized by the procedure as written. In TO-630-001, Section 5.0., PROCEDURE, there is a note that reads: "Section 5.1 must be performed before Section 5.2 or 5.3.....". When it was determined that the best course of action was to leave valve RWV-11 closed until the inside crew entered the Sample Room the work activity should have been stopped, the workplace placed in a safe configuration and the procedure changed before work was allowed to continue.

Contributing Factors:

- There is an underlying thought process at the 242-A Facility in the operating culture that it is extremely difficult to account for all possible problem scenarios and contingencies to address each scenario in all operating procedures. This leads to the idea that the 242-A Shift manager has some "flexibility" in procedure usage when operating the facility. This is not a justification or authorization for procedure noncompliance but it must be acknowledged that this culture exists and it must be addressed.
- Due to the complexity of the task and the number of people involved personnel are more inclined to "keep the job going" and "do what it takes" to get the work done. Even though personnel act with good intentions and make decisions in the interest of personnel safety neither of these is a substitute for procedure compliance.
- On 03/24/09 and 03/25/09 the slurry sampling activity was one of several activities that SM1 was monitoring. SM1 was not able to devote his full attention to the slurry sampling activity and got involved only when abnormal conditions arose.

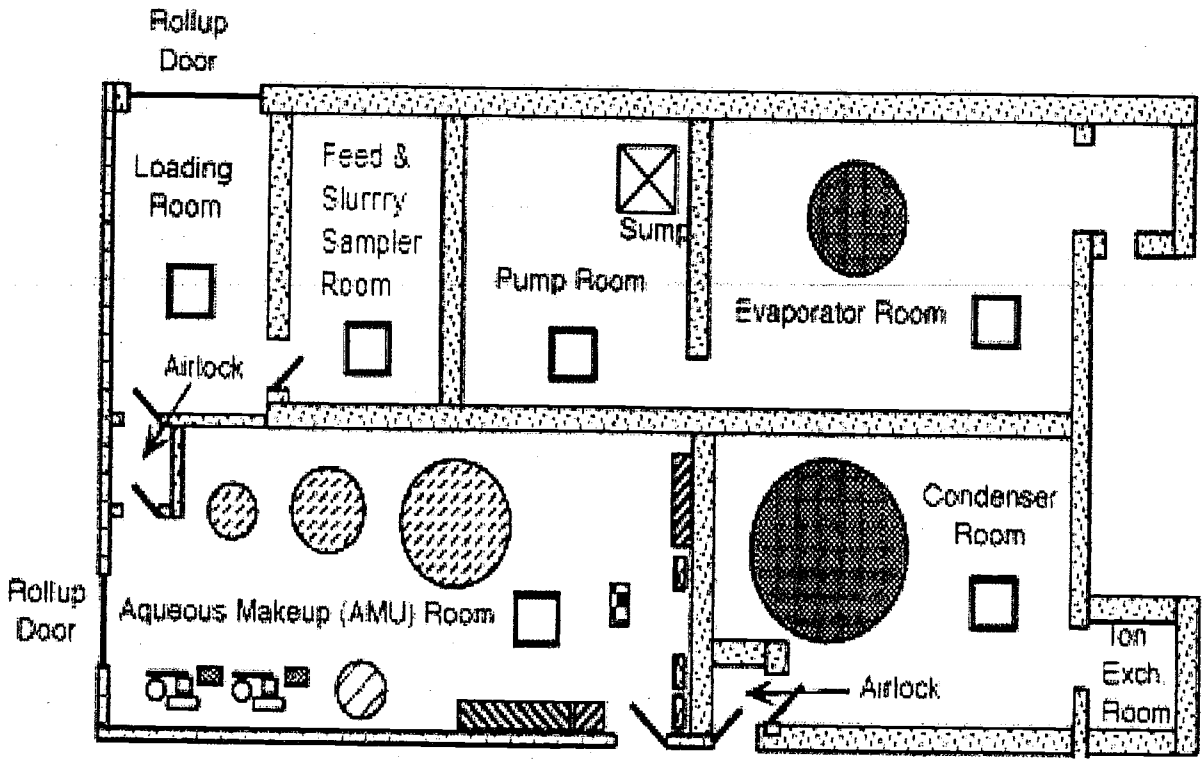

Figure 1 Floor Plan

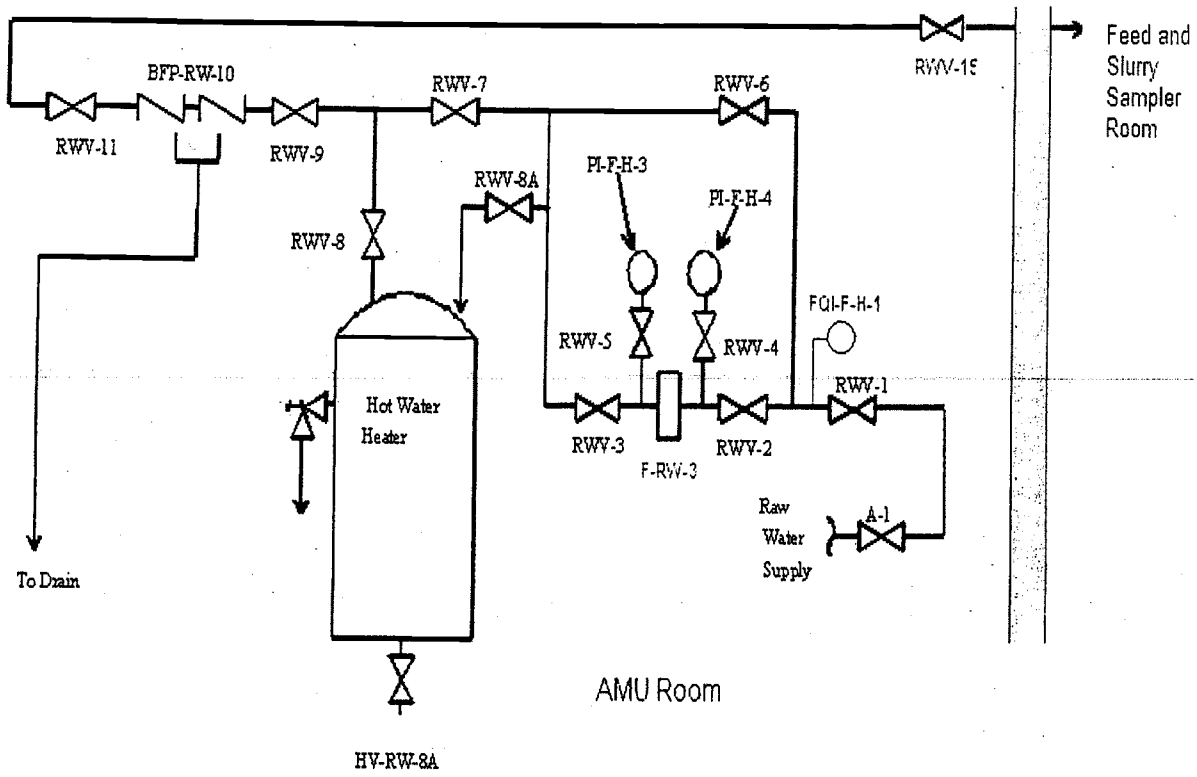

Figure 2, Raw Water Supply to Feed and Slurry Sampler Room

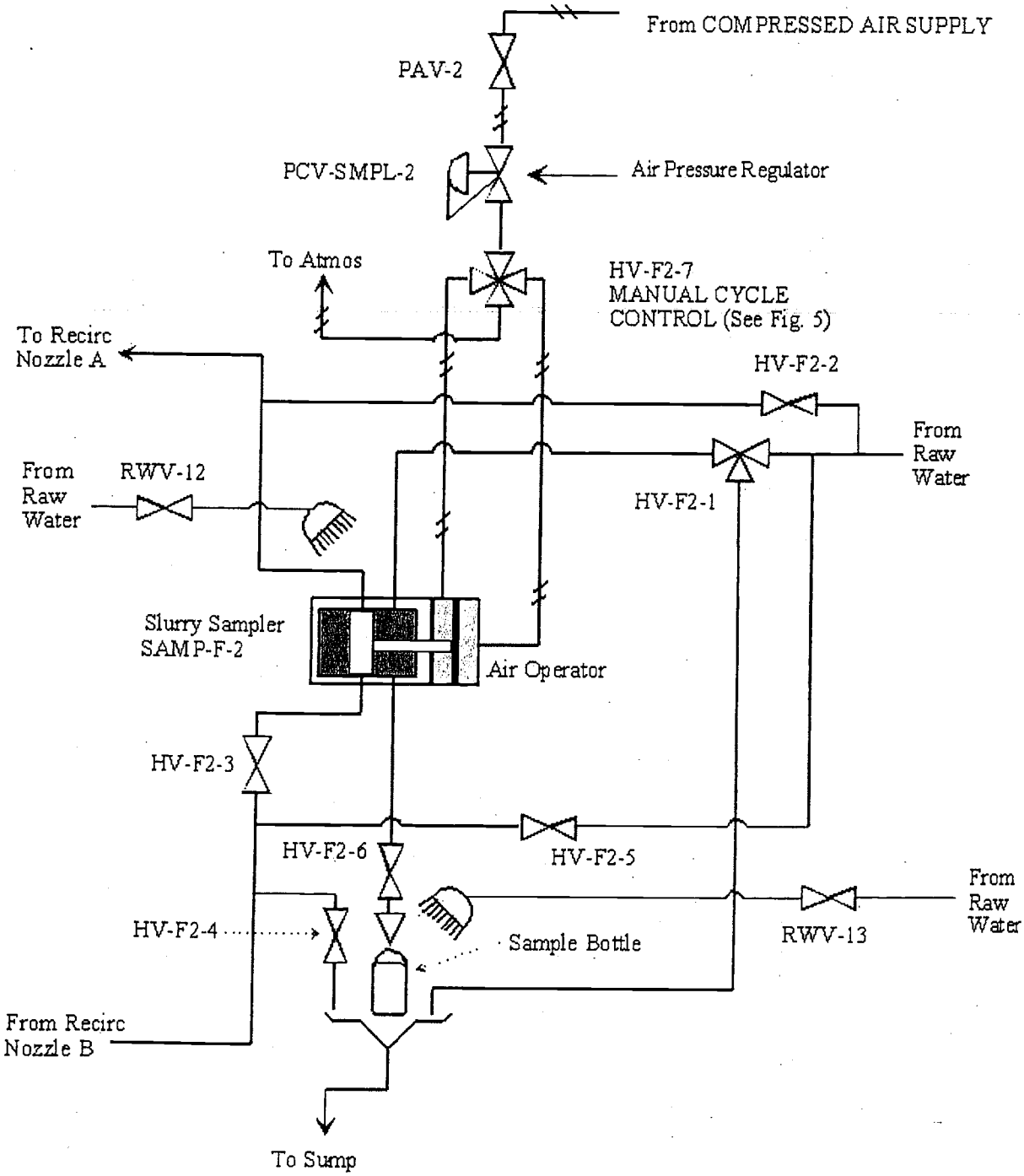

Figure 3. Slurry Sampler System Flow Diagram

Mgmt Expectations 4.6.09

Brosee, Neil

Subject:	Management Expectations
Location:	274AW/CR 10
Start:	Mon 4/6/2009 1:00 PM
End:	Mon 4/6/2009 2:00 PM
Recurrence:	(none)
Meeting Status:	Meeting organizer
Required Attendees:	Brosee, Neil; Reynolds, Tammy R; LaRock, Eric M; Hyman, Sandra D; Raven, Rebecca P (Bexa); Roberts, Mark A; Gregory, Robert E (Rob); Owen, Peter L; Schmorde, F A (Fred)
Optional Attendees:	Mendoza, Ruben E; Hanson, Gregory N; Harty, W M Jr (Mike); Milliken, Nancy J

The purpose of this meeting is to discuss management expectations/approach to information disseminated to the troops. BB 4-06-09.

Expectations

Procedures format

Event Recognition

FWS

Re-Engage

FWS / FWS

EDLs

Shelly Patty

P/B - content

- Reverse Briefing

Chain of Command

Priorities

Willingness to Stop

Procedure Compliance

- Accountability

Ownership matrix

TABLE OF CONTENTS

1.0 PURPOSE AND SCOPE 3
2.0 IMPLEMENTATION 3
3.0 RESPONSIBILITIES 3
3.1 Procedures Group 3
3.2 Operations Manager(s)/Shift Manager(s)/Procedure Owner(s) 4
3.3 Functional Owner(s)/Procedure Owner(s) 4
3.4 Technical Authority(s) 4
3.5 Security & Emergency Services/Events & Investigations 5
3.6 ESH&Q Representative 5
3.7 Radiological Controls Representative 5
3.8 Criticality Safety Representative 5
3.9 Book Custodian(s) 5
3.10 Procedure User(s) 5
4.0 PROCEDURE 6
4.1 Determine PCA/Revision 6
4.2 Preparing New Procedures or Revisions 7
4.3 Verifying and Validating Procedures 9
4.4 Reviewing New and Revised Procedures 10
4.5 Processing Inconsequential Pen and Ink Field Changes 16
4.6 Processing Procedure Change Authorizations 17
4.7 Processing New, Revised, PCAs, or Administrative Changes Using IDMS Workflows. 21
4.8 Processing Global Changes Using the IDMS PCA Workflow 22
4.9 Performing Periodic Reviews Using IDMS Electronic Work Flow 23
4.10 First Time Use Change Control Process 24
4.11 Changing Technical Procedure Templates/Models 26
4.12 Controlling Technical Documents 27
4.13 Inactivate or Review Prior to Use Technical Documents 28
4.14 Changing Inactive and Review Prior to Use Procedures 28
4.15 Void Procedures 29
4.16 Reactivate Technical Documents 30
4.17 Using Procedures 30
5.0 DEFINITIONS 34
6.0 RECORDS 38
7.0 SOURCES 38
7.1 Requirements 38
7.2 References 39

TABLE OF FIGURES

Figure 1. Technical Procedure Process 41

4.4 Reviewing New and Revised Procedures (Cont.)

Records Management Specialist

34. Issue the procedure in accordance with Section 4.12. (7.1.6)

4.5 Processing Inconsequential Pen and Ink Field Changes
(7.1.13, 7.1.14)

Pen and ink field changes must:

- Be inconsequential changes as stated below (7.1.8)
- Not violate regulatory requirements.

Procedure User

1. Contact the shift manager for approval of procedure change.
   - Procedure number, rev/mod, title
   - Page and description of change.

Shift Manager

2. Verify that the change is inconsequential per the definition in TFC-ENG-SB-C-03. (7.1.8)

3. If the change is other than inconsequential, process as a PCA in accordance with Section 4.6.

4. If verifying labeling discrepancies verify configuration by reviewing the following:
   - Drawings
   - Engineering Change Notice (ECN)
   - Other pertinent documents.

Procedure User

5. If requested changes are approved: (7.1.6)
   - Mark up procedure changes legibly with permanent ink pen (ball point pen)
   - Initial and date the change
   - Note approval by (shift manager's name) per telecon
   - Return to work.

Shift Manager

6. Prepare the DARF, Change Summary, and Signature Sheet; attach copy of complete procedure with changes made in ball point pen.

7. Enter procedure user's name per telecon (see Section 5.0 for definition of telecon acceptance signature) and sign as approval authority. (7.1.6)

   NOTE: Only two signatures are required to process an inconsequential change, the user and the shift manager.

8. Enter N/A for review designator.

4.5 Processing Inconsequential Pen and Ink Field Changes (Cont.)

9. If you are on the list for Designated Personnel to Apply GCX-2, enter GCX-2 on the DARF. (7.1.8)

   NOTE: Designated list can be found under the following web page: "Nuc. Safety and Licensing"/"USQ Process Home Page"/Designated Personnel to Apply Cat Ex 2".

10. If you are not on the list of Designated Personnel, contact Nuclear Safety to perform a USQ per TFC-ENG-SB-C-03 and enter the USQ number provided on the DARF.

12. Place the following documents in the PCA drop box (in the shift office or a designated area):

    - Original copies of the completed DARF
    - Change Summary Signature Sheet
    - Marked-up copy of the complete procedure.

13. Notify the Procedures manager or group that a pen and ink field change has been made and a copy is in the PCA drop box.

14. If the change is to an alarm response procedure, copy the change and place it in the alarm response binder. (7.1.6, 7.1.13, 7.1.14)

Records Management Specialist

15. Pick up the completed change.

Procedure Writer

16. Incorporate the change, ensuring compliance with TFC-OPS-OPER-STD-01. (7.1.6, 7.1.12, 7.1.13, 7.1.14)

17. Deliver the completed change, including the electronic file, to the Records Management Specialist. (7.1.6)

Records Management Specialist

18. Issue the procedure in accordance with Section 4.12. (7.1.5, 7.1.6)

4.6 Processing Procedure Change Authorizations
(7.1.13, 7.1.14)

Requestor

1. Obtain the latest revision of the procedure from the procedures web page. (7.1.6)

Technical Authority/ Requestor

2. Prepare changes to the procedure. Mark the changes with computer generated "redlines and strikeouts" or permanent ink pen (ball point pen). (7.1.6)

4.6 Processing Procedure Change Authorizations (Cont.)

3. Prepare a DARF (A-6002-869) and the Change Summary and Signature Sheet and attach the following to the PCA:

   - Changed pages (for operating procedures)
   - Complete procedure (for maintenance procedures) and PM Ids, if applicable.

Technical Authority

4. Assign a review designator in accordance with Attachment A. (7.1.6)

5. If the procedure being changed is listed in Attachment C, designate the Criticality Safety Representative or the alternate Criticality Safety Representative as a reviewer. (7.1.6)

6. Review HNF-IP-1266 for program implementation.

7. Review the following for actions that may need to be incorporated into the procedure:

   - Action tracking binder
   - Standing orders
   - Red arrow entries.

   NOTE: All items are located in the appropriate shift office.

Technical Authority/ Requestor

8. If any PM Id activities are affected by the PCA, complete substeps a through c. (7.1.13, 7.1.14)

   a. Access the Work Management System and identify all PM Id activities that are affected by the PCA.

   b. Revise PM Id activities in accordance with TFC-ENG-FACSUP-C-23.

   c. Include the PM Ids with the PCA. (7.1.13, 7.1.14)

9. Complete sub-steps a through c to ensure the procedure change does not impact any existing procedures. (7.1.3, 7.1.6)

   a. Identify any other procedures that may be impacted by the procedure change.

   b. If the impacted procedure(s) is an administrative procedure, complete an Administrative Document Change Authorization form (A-6002-373) for each impacted procedure in accordance with TFC-BSM-AD-C-01.

   c. If the impacted procedure(s) is a technical procedure, revise the impacted procedure(s) in accordance with this procedure.

4.6 Processing Procedure Change Authorizations (Cont.)

Procedure User	10. Ensure (preferably at the work site) that the changes (including PM Ids as applicable) can be performed as written and that all equipment nomenclature is correctly identified. (7.1.6, 7.1.13, 7.1.14)
	11. On the Document Acceptance Review Form (DARF), check the appropriate box: (1) "acceptable as is" or (2) "acceptable with changes noted," and sign and date. (7.1.6)
Technical Authority/ Requestor	12. Obtain signatures (on the DARF) for review and acceptance in accordance with the assigned review designator. (7.1.6, 7.1.13, 7.1.14)
	13. If the PCA affects a TSR or an Administrative Control (AC) program, obtain the shift manager, or delegate's approval.
Criticality Safety Representative/ Alternate Criticality Safety Representative	14. If Attachment C requires the procedure being changed to have a criticality safety review, complete substeps a through c. (7.1.6) a. Review the procedure to ensure the proposed changes will not alter the form of distribution of fissionable material in tank farms in a manner that would violate the nuclear criticality basis. b. If it is determined that the proposed changes will violate the nuclear criticality basis, consult with the technical authority to make the changes necessary to preserve the nuclear criticality basis. c. Sign the DARF to verify the procedure is consistent with criticality prevention specifications.
Technical Authority/ USQ Evaluator	15. Ensure a USQ evaluation is performed in accordance with TFC-ENG-SB-C-03, if applicable. (7.1.6, 7.1.8)
Technical Authority/ USQ Evaluator/ Records Management Specialist/Procedure Writer	16. Document the USQ tracking number on the DARF (A-6002-869) or mark "N/A" if the procedure is a routine maintenance procedure or is considered out of scope as defined in RPP-27195. (7.1.8) NOTE: See TFC-ENG-SB-C-03 for the definition of routine maintenance.
Procedure Owner/ Shift Manager	17. If the revised procedure contains unfamiliar process steps, ensure adequate training is provided before procedure implementation. (7.1.2)
	18. Sign the DARF as the final approval authority indicating that the appropriate level of review was performed and the procedure is ready to issue. (7.1.6)

4.6 Processing Procedure Change Authorizations (Cont.)

Technical Authority/ Procedure Owner

19. If a step that implements a TSR is added or deleted, review the Safety Basis Requirements Implementation Matrix to evaluate whether the changed procedure necessitates a change to the matrix.

    a. If a change to the matrix is needed, complete the RIM Change Request form (A-6003-814).

    b. Submit the form to the AA/AB Compliance Lead.

Requestor

20. If the PCA is electronic, forward the copy to the Procedures group.

Procedure Owner/ Requestor/Records Management Specialist

21. Obtain a PCA number from the procedures web page and enter the number on the DARF.

Procedure Owner/ Shift Manager/ Requestor

22. Place the following documents in the PCA drop box (in the shift office or a designated area) or deliver to the Procedures group:

    - Original copies of the completed DARF
    - Change Summary Signature Sheet
    - Changed pages (for operating procedure)
    - Complete procedure and PM Ids (for maintenance procedures), if applicable.

23. If the field change/working copy or a "pen and ink" copy of the procedure is to be used until the Procedures group incorporates the PCA, obtain review signatures and approval signatures on the DARF from the applicable shift manager, procedure owner, or an authorized delegate. (7.1.7)

    NOTE: Signatures for the PCA can be obtained per telecon.

Shift Manager

24. If multiple PCAs (computer generated "redlines and strikeouts" or "pen and ink" procedure changes) are to be used during the off-shift or special evolutions, complete substeps a through e. (7.1.6, 7.1.13)

    NOTE: The following substeps do not need to be completed in sequence.

    a. Ensure no more than five unincorporated PCAs are outstanding.

    b. Ensure changes are clearly marked, readable, and identifiable.

    c. Ensure changes have the required review signatures on the PCA cover sheet.

    d. Ensure each PCA incorporates the changes from the previous PCA without changing the revision or modification numbers.

4.6 Processing Procedure Change Authorizations (Cont.)

e. Ensure each PCA will be incorporated under one of the following conditions:

- After the off-shift activities return to day shift
- The special evolution is complete
- At the request of the approval authority/procedure owner.

f. Ensure a USQ is written that evaluates the combined effect of the multiple changes.

Records Management Specialist

25. Pick up the completed PCAs, if applicable.

Procedure Writer

26. Incorporate PCA changes ensuring compliance with TFC-OPS-OPER-STD-01. (7.1.6, 7.1.12, 7.1.13, 7.1.14)

27. If the rev/mod you are preparing to issue has already been recently approved/issued, ensure a USQ is written that evaluates the combined effect of the multiple changes.

28. Deliver the completed PCA, including the electronic file, to the Records Management Specialist. (7.1.6)

Records Management Specialist

29. Issue the procedure in accordance with Section 4.12. (7.1.5, 7.1.6)

4.7 Processing New, Revised, PCAs, or Administrative Changes Using IDMS Workflows (7.1.13, 7.1.14)

All

1. Draft the new, revised or requested change.

   NOTE: For a PCA ensure you have the most current copy of the procedure.

2. Click on one of the following to initiate the required process:

   - "Initiate PCA Workflow"
   - "Initiate New or Revision Workflow"

   NOTE: These initiate buttons are located on the procedures web page.

3. Follow the instruction as outlined in the workflow. (7.1.6, 7.1.8, 7.1.12),

Ownership matrix

TABLE OF CONTENTS

1.0 PURPOSE AND SCOPE 2
2.0 IMPLEMENTATION 3
3.0 RESPONSIBILITIES 3
- 3.1 Operations Manager or Designees 3
- 3.2 Nuclear Safety Manager 3
- 3.3 USQ Coordinators 4
- 3.4 USQ Evaluators 4
- 3.5 USQ Reviewers 4
- 3.6 Nuclear Safety - Safety Basis Analysts 4

4.0 PROCEDURE 4
- 4.1 General 4
- 4.2 Training and Qualification 5
- 4.3 USQ Process 6
- 4.4 USQ Screening Process 6
- 4.5 USQ Determination Process 7
- 4.6 Revising RPP-27195 8
- 4.7 Annual USQ Summary Report 9
- 4.8 Discovery of Potential Inadequacies in the Existing Safety Analysis (PISAs) 9
- 4.9 Categorical Exclusions 11

5.0 DEFINITIONS 11
6.0 RECORDS 15
7.0 SOURCES 16
- 7.1 Requirements 16
- 7.2 References 16

TABLE OF FIGURES

Figure 1. USQ Process Flowchart. 17
Figure 2. Categorical Exclusion to Allow Procedures to be Revised to Incorporate ORP-Approved Safety Basis Changes. 18
Figure 3. Categorical Exclusion for Inconsequential Changes 19
Figure 4. Categorical Exclusion for Work Instructions, Work Permits, or other Documents used for Execution of Work Packages 20

TABLE OF ATTACHMENTS

ATTACHMENT A – USQ SCREEN QUESTIONS 21
ATTACHMENT B – USQ DETERMINATION QUESTIONS 24
ATTACHMENT C – PISA EVALUATION WORKSHEET 30

Inconsequential change. Changes to documents that are:

- Correction of grammatical, typographical, or spelling errors that:
  - Do not affect numbers other than page, table, figure, title numbers, or obvious and demonstrable typographical errors. Changes in decimal points, units of measure or nameplate information/data are not inconsequential changes.
  - Do not affect units of measure other than obvious and demonstrable typographical errors.
  - Do not affect acceptance criteria other than obvious and demonstrable typographical errors.
  - That did not translate correctly from the original source document due to software issues.
- Updating position or organization names or titles,
- Reword phrases, sentences, and paragraphs,
- Change the format of the document (e.g., rearrange unnumbered lists of items, rescale items, move details to new sheets, pagination, table, or figure title number changes, etc.),
- Add/update document references (provided changes to the references have already been appropriately USQ reviewed), or
- Add, change, delete or clarify notes or cautions that do not direct operator actions

AND

Provided the inconsequential changes do not:

- Make any technical changes,
- Change the meaning, overall scope, or purpose of the existing documents or drawings,
- Create a new procedure, document, or drawing, or
- Change a Technical Safety Requirement (TSR) or its bases.

Maintenance. *The proactive and reactive day to day work that is required to maintain and preserve facilities and SSCs within them in a condition suitable for performing their designated purpose, and includes planned or unplanned periodic, preventive, predictive, seasonal or corrective (repair) maintenance.* (7.1.3)

Margin of safety. *...the range between two conditions. The first is the most adverse condition estimated or calculated in safety analyses to occur from an operational upset or family of related upsets. The second condition is the worst case value known to be safe, from an engineering perspective. This value would be expected to be related to the condition at which some accident prevention or mitigation action is taken in response to the upset or accident, not the actual predicted failure point of some component.* (7.1.2.g)

New information. Information that could indicate a PISA supporting the current facility safety basis.

Figure 2. Categorical Exclusion to Allow Procedures to be Revised to Incorporate ORP-Approved Safety Basis Changes.

GCX-1

TITLE: Categorical Exclusion to Allow Procedures to be Revised to Incorporate the U. S. Department of Energy, Office of River Protection (ORP)-Approved Safety Basis Changes

MINIMUM QUALIFICATION TO APPLY: Qualified USQ Evaluator.

CATEGORICAL EXCLUSION: This Categorical Exclusion allows ORP-approved safety basis changes to be incorporated into Tank Operations Contractor (TOC) procedures, technical documents, administrative documents, drawings, Engineering Documents, and other supporting documents to be excluded from the USQD process.

PREREQUISITES: The accuracy of the proposed technical changes to TOC documents has been verified.

CATEGORICAL EXCLUSION SCOPE AND BOUNDARIES: This Categorical Exclusion applies only to initially implement new or revised safety basis changes as approved by the ORP, provided the changes are effective with or following the implementation of the safety basis changes.

This Categorical Exclusion does not apply to:

- Changes to documents unrelated to implementation of ORP approved safety basis changes and
- Implementation of changes to documents prior to the effective date of the safety basis changes.

JUSTIFICATION: The USQ process is used to determine the approval authority for changes. Changes to implementing documents resulting from ORP-approved safety basis changes are in effect ORP-approved changes, and therefore, no further USQ review is required since these activities cannot represent a USQ.

Figure 3. Categorical Exclusion for Inconsequential Changes.

GCX-2

TITLE: Categorical Exclusion for Inconsequential Changes to Existing Documents

MINIMUM QUALIFICATION TO APPLY: Qualified USQ Evaluator or designated staff

CATEGORICAL EXCLUSION: Inconsequential Changes (as defined in the Categorical Exclusion Scope and Boundaries section) are excluded from further review in the USQ process.

PREREQUISITES: Designated staff who may apply this GCX shall be identified and approved by the Nuclear Safety Manager.

CATEGORICAL EXCLUSION SCOPE AND BOUNDARIES: Inconsequential changes to existing documents are those that are:

- Correction of grammatical, typographical, or spelling errors that:
  - Do not affect numbers other than page, table, figure, title numbers, or obvious and demonstrable typographical errors. Changes in decimal points, units of measure or nameplate information/data are not inconsequential changes.
  - Do not affect units of measure other than obvious and demonstrable typographical errors.
  - Do not affect acceptance criteria other than obvious and demonstrable typographical errors.
  - That did not translate correctly from the original source document due to software issues.
- Updating position or organization names or titles,
- Reword phrases, sentences, and paragraphs,
- Change the format of the document (e.g., rearrange unnumbered lists of items, rescale items, move details to new sheets, pagination, table, or figure title number changes, etc.),
- Add/update document references (provided changes to the references have already been appropriately USQ-reviewed), or
- Add, change, delete or clarify notes or cautions that do not direct operator actions

AND

Provided the Inconsequential Changes do not:

- Make any technical changes,
- Change the meaning, overall scope, or purpose of the existing documents or drawings,
- Create a new procedure, document, or drawing, or
- Change a Technical Safety Requirement or its bases.

JUSTIFICATION: Inconsequential Changes under this categorical exclusion do not make technical changes to procedures or change the facility. Therefore, these changes cannot lead to a condition that could be a USQ.

Figure 4. Categorical Exclusion for Work Instructions, Work Permits, or other Documents used for Execution of Work Packages.

GCX-3

TITLE: Categorical Exclusion for work instructions, work permits, or other documents used for execution of work packages

MINIMUM QUALIFICATION TO APPLY: Qualified USQ Evaluator or designated staff

CATEGORICAL EXCLUSION: This Categorical Exclusion allows the work execution and permitting (i.e., the non-authorizing facility changes either permanent or temporary) portion of a work package to be excluded from the USQ process.

Where the work execution or permitting portion of a work package do not cause:

1. A change to any TSR implementation work or procedure, and
2. A change to any safety SSC or equipment important to safety.

Work Package: A consolidated document used by organizations such as maintenance or projects, that contain all necessary procedures, instructions, requirements, permits (e.g., radiation work permits), and engineering change notices (ECN), etc., to safely and effectively perform work.

The hazards that may be involved during the execution of a work package should be addressed by the appropriate Safety Management Program. The work control procedures address hazards for worker protection, not the USQ process. For example, these procedures or permits (Confined Space, RWP, etc.,) are in programs, such as radiation protection, hazardous material protection, work planning and control, OSHA, ALARA, LO/TO.

PREREQUISITES: The ECNs, drawings, or other administrative procedures that authorize facility changes, permanent or temporary, as part of a work package are verified to have been through the USQ process. Designated staff who may apply this GCX shall be identified and approved by the Nuclear Safety Manager.

CATEGORICAL EXCLUSION SCOPE AND BOUNDARIES: The work execution and permitting portions of a work package do not require a USQ evaluation. Routine maintenance work is "out of scope" from the USQ process.

- Facility changes, permanent or temporary, are documented in ECNs. ECNs for facility changes require USQ evaluation.

JUSTIFICATION: Facility changes, permanent or temporary, are covered by written directions, provided by ECNs and/or drawings, or procedures, which have been evaluated under the USQ process.

INTEROFFICE MEMORANDUM

washington river protection solutions

Date: October 24, 2008 WRPS-0800077

To: H. S. Berman

From: L. L. Eppler

Subject: DESIGNATED WASHINGTON RIVER PROTECTION SOLUTIONS PERSONNEL TO APPLY CATEGORICAL EXCLUSION 2 FOR INCONSEQUENTIAL CHANGES TO PROCEDURES

In addition to the Qualified Unreviewed Safety Question Evaluators, the following personnel have been designated by Nuclear Safety to apply the categorical exclusion for inconsequential procedure changes, GCX-2, as described in TFC-ENG-SB-C-03, *Unreviewed Safety Question Process:*

Anderson, Kenneth J
Anderson, Rick A
Andrews, Jeffrey E
Garrett, Mark S
Gauck, Greg
Gilles, Dave
Harrison, Dale
Higham, Dale B
Hopkins, Gary P
Hurson, Patrick J
Johnson, Brian A
Malhan, Rajiv
Malhan, Rakesh
Niebuhr, Dan
Parnell, Bill
Raven, Rebecca
Ravencraft, Treta K
Reichmuth, Curt R
Ringo, Steven D
Saueressig, David J
Smith, Keith
Smith, Kelly M
Strasser, David W
Sutey, Mike
Treadway, Phil L
Walker, Lewis (Lew)
Wallace, Ben
Wallgren, Carl B

This memo replaces 78C00-LLE-09-001 to identify additional personnel that had met the qualification requirements prior to October 1, 2008, but were inadvertently left off the list.

Should you have any questions regarding this matter, please contact me at 373-2728.

LLE:CJW

cc: T. G. Goetz
J. M. Grigsby
C. J. Williams

LLE File/LB

INTEROFFICE MEMORANDUM

CH2MHILL
Hanford Group, Inc.

78C00-LLE-09-002

Date: October 1, 2008

To: H. S. Berman

From: L. L. Eppler

Subject: DESIGNATED WAHSINGTON RIVER PROTECTION SOLUTIONS PERSONNEL TO APPLY CATEGORICAL EXCLUSION 3 FOR DOCUMENTS USED IN EXECUTION OF WORK PACKAGES

In addition to the Qualified Unreviewed Safety Question Evaluators, the following personnel have been designated by Nuclear Safety to apply the categorical exclusion for work instructions, work permits, and other documents used for execution of work packages, GCX-3, as described in TFC-ENG-SB-C-03, *Unreviewed Safety Question Process:*

Gregory J. Gauck
Rebecca P. Raven
Michael J. Sutey

Should you have any questions regarding this matter, please contact me at 373-2728.

LLE:CJW

cc: T. G. Goetz
J. M. Grigsby
C. J. Williams

LLE File/LB

ATTENDANCE ROSTER

Subject: Management Expectations Meeting SSW & 242-A Campsight Summary

Date: 4.10.09

Leader: M. N. BROSEE

NAME (Print)	Signature	Position/Title	Organization
RP RAVEN		FOM	242A/BO
J E BORROWMAN	J.E. Borrowman	Day Ops.	B.O.
DA GILLES		242A SM	242A
J.J. BADDER	J.J. Badder	SSW	BOO
R. E. Gregory		Dpty BASE OPS	BASE OPS
T. B. Reynolds		Base Ops	Base Ops
C E HAMPTON	Cliff E Hampton		B O
F.A. SCHMORDE		TESTING	B.O.

Name		
M. N. Brosee	Base Ops Mgr	521-8165
P. L. Owen	Shift Ops Mgr	438-4789
F. A. Schmorde	Testing	308-1670
Dana Anderson	HPT RADCON	373-3011
Nancy Milliken	Tech Support Mgr	438-9504
Jim Badden	Base Ops Ops	438-9806
Tammy Reynolds	Base Ops	942-8490
RP Raven	[illegible] 242A	438-2821
W. M. Hartry	~~Base~~ Ops Engr	438-1626
MA Roberts	Base Ops Maint Eng Mgr	376-4852
Robert Coregory	(Dpty) Base Op's	373-9980
S. D. Hyman	ESHQ Base Ops	942-8503 ~~279-0~~
E. LaRock	Maint/Work Execution	323-5248

WRPS ~~CH2M HILL~~ PSL 4/7/09

ATTENDANCE ROSTER

Subject:	Date:
Management Expectations Meeting	4.7.09
	Leader: M.N. BROSEE

NAME (Print)	Signature	Position/Title	Organization
ROD BROWN	[illegible]	MGR	MAINT.
WG BRULE	[illegible]	FLM	MAINT
Rob Coregory	[illegible]	Bldg Base OPS	BASE OPS
Wayne Wuldman	[illegible]	Engr	BOESE

A-6003-211 (11/05)

CH2M HILL
ATTENDANCE ROSTER

Subject: Management Expectations Meeting

Date: 4-7-09

Leader: M.N. BROSEE

NAME (Print)	Signature	Position/Title	Organization
J.J. RADDEN		SSA	BOO
John Wolff		FWS	BO
Kim Rowell		S&H Mgr	BO
Robin Fogg		S&H	BO
Rob Dunn		BO PCN MGR	BO
Rocky L BROOKS		MP PLAN & SY Facility Manager	BO
Fran Marsh		Clerk	B.O. Engineering
Rob Dale		SE	EBOE
Gary R. Tardiff		SE	EBOE
Wendy Adams		IH	WRPS IH&S
Mark Cranston		IH/IS	BO
Ron Tucker		BO EOPS Maintenance	BO
JAMES BINGHAM		SE / HOME	BOME
VIET NGUYEN		SE	B.O.
DARREN L MERRILL		IH	BO S&H
GREGORY CARPENTER		ENG	BO
Nancy Milliken		MGR Tech Supp	Base Ops
Pete Owen		Shift Ops Mgr	Base Ops
Tammy Reynolds		OPS	Base Ops
KENNETH EWER		BO ENG	BO
Connie Flores		BO Safety	BO
Chris WOEHLE		OPS	BO
RL WRIGHT		OPS	BO
T.M. BLAAK		BO ENG	BO

A-6003-211 (11/05)

OVER →

CH2M HILL
ATTENDANCE ROSTER

Subject: Management Expectations Meeting

Date: 4.7.09

Leader: M. N. BROSEE

NAME (Print)	Signature	Position/Title	Organization
J E Borrowman	J E Borrowman	manager	WRPS
P.B. BRANNAN	[illegible]	M&R/BO RC	WRPS
M. LUTZ	M. [illegible]	FWS	WRPS
Steve Ringo	[illegible]	FWS/SM	WRPS
DAVID BARNES	D Barnes	Eng.	WRPS
Robert Nicholson.	[illegible]	Eng.	WRPS.
~~Roger~~ R FRIESE	[illegible]	FWS	WRPS
W. M. HARTY	W Harty	BO ENGR	WRPS.
RICK NELSON	[illegible]	ENG	WRPS
Darrell Heimberger	[illegible]	ENG	WRPS
Brian K Everett	Brian K Everett	ENG	WRPS
Mark A Roberts	Mark Roberts	ENG	WRPS
Gary L. Jackson	Gary L. Jackson	FWS	WRPS
M.B. Geffre	[illegible]	FWS	WRPS
Bob Hickman	[illegible]	FWS	WRPS
Glen Anderson	[illegible]	FWS	WRPS

A-6003-211 (11/05)

CH2M HILL
ATTENDANCE ROSTER

Subject: Management Expectations Meeting

Date: 4.7.09

Leader: M. N. BROSEE

NAME (Print)	Signature	Position/Title	Organization
L. Huddleston	L Huddleston	Radcon FLM	Radcon
D. Foley	Dick Foley	PROJECT CONTROLS	PROJ CTRL
D.C. HARTLEY	DC Hartley	FWS	WRPS Sampling
D.L. Ronberger	DL Ronberger	222-S Mgr	Base Ops
JE Crockett	[illegible]	SST Radcon	BASE Ops
TERANCE LANEY	Terance Laney	SE	BASE OPS
Braun David	David J. Braun	SE	Base Ops
S.D. Hyman	SDH	ESH:D Mgr	Base Ops

A-6003-211 (11/05)

ATTENDANCE ROSTER

Subject:
Management Expectations Meeting

Date: 4/8/09

Leader: M.N. BROSEE

NAME (Print)	Signature	Position/Title	Organization
Kyle L. Meyer	[illegible]	ROFCM	Base Ops
Jim G. Duprequiere	[illegible]	BO Radio	Bus Ops
Anthony R. Thomas	[illegible]	FWS	BO Maintenance
Craig Upchurch	[illegible]	SSW	Sampling
H.A. Mendoza	[illegible]	FWS	Waste Ops.
David Pattee	[illegible]	RCFLS	Base Ops

ATTENDANCE ROSTER

Subject:
Management Expectations Meeting

Date: 4/8/09

Leader: M. N. BROSEE

NAME (Print)	Signature	Position/Title	Organization
ERIC LAROCK	E. LaRock		MAINT/WORK EX.
JASON RANDLES	J. Rle		IS/IH
GORDON MCKENZIE	Gordon McKenzie		SST/MAINT
Randy W.M. Cook	Randy W.M. Cook		BO/Maint.
K D Smith	K D S		BO/Procedures
S.E. Bevans	S E Bevans		BO/Procedures
Shannon Brown	Shannon Brown		BO Procedures
JOHN CORDETT	John Cordett		BO/TESTING
Rob Coregory	R A Thy		BASE OPS

ATTENDANCE ROSTER

Subject:
Management Expectations Meeting

Date: 4/8/09

Leader: M.N. BROSEE

NAME (Print)	Signature	Position/Title	Organization
GRANT BACHAUD	Grant Bachaud	RAD CON FLM	WRPS BASE OPS EAST
Lm Walker	Lm Walker	Shift mgr	BOEO
RAKESH MALHAN	[illegible]	SHIFT MANAGER	BASE OPS SHIFT
DAVID BROWN	[illegible]	FACILITY MGR.	BASE OPS MAINT.
DAVID GILLES	[illegible]	SM	BO
[illegible]	[illegible]	Ops mgr	BO
WH BRYANT	WH Bryant	WBO ELECT MGR	BO
EDGAR MARTINEN	[illegible]	PROJECT MGR	BO PROJECTS
JIM GERARD	Jim C Gerard	PROJ. MGR	B.O.
Chris Burke	Chris Burke	Proj. Mgr	BO

ATTENDANCE ROSTER

Subject: Management Expectations Meeting

Date: 4/8/09

Leader: M.N. BROSEE

NAME (Print)	Signature	Position/Title	Organization
ERIC Hudspeth		FWS	MAINT
DOUG DEFORD	D. Deford	Test Director	OPS
DOUG SWENSON		WTS MGR	OPS
RW Jones		Main FWS	Maint
GN Hanson		Tech Support	Base Ops
MIKE FISH		SYT ENG	BASE OPS
TERRY RAHM		PROJ. MGR	BO
ANDREW TEMPLETON		ENG.	BO
WAYNE MOONEY		FWS	MAINT
JM Hay		FWS	maint.
BEN WUTZKE		FWS	MAINT
DAVID BRAGG		ENG.	BOME
Cecily Lehmann		HMC MGR	Base OPS 222-3

ATTENDANCE ROSTER

Subject:
Management Expectations Meeting

Date: 4.8.09

Leader: M. N. BROSEE

NAME (Print)	Signature	Position/Title	Organization
Treta Ravencraft	Treta Ravencraft	Manager V&B	BO
Don Rovechè	[illegible]	FWS V&B	BO
B WALLGREN	[illegible]	SJM BO	BO
D Mitchell	[illegible]	FWS / BO	BO
ER Chapman	[illegible]	FWS	BO
W Clark	W Clark	FWS	BO
C HAMPTON	[illegible]		BO

ATTENDANCE ROSTER

Subject:
Management Expectations Meeting

Date: 4/8/09

Leader: M.N. BROSEE

NAME (Print)	Signature	Position/Title	Organization
CHUCK PEOPLES	[illegible]	MGR BO	WRPS
DOUG GERKEN	[illegible]	PROJECT ENGR	WRPS
Mark Johnson	[illegible]	BO FWS	WRPS
Eric Waldo	[illegible]	Sampling OE	WRPS
Leland Coleman	[illegible]	Proc. Writer	WRPS
John Hobbs	[illegible]	ATW/TPG	WRPS
Jerry Lehman	[illegible]	Proc	WRPS

ATTENDANCE ROSTER

Subject:	Date:
Management Expectations Meeting	Leader:

NAME (Print)	Signature	Position/Title	Organization
Heinemann, Jay L.		Mgr - 222-S	
CALLAWAY, WILLIAM S	W.S. Callaway	CHEMIST/SCIENTIST	222-S/APD
HYMAN, SANDRA D.		ESHQ	274-AW
OWENS, Janice L.	Janice L. Owens	CHEMIST/scientist	222-S/APD
WYRWAS, Richard B		CHemist-Scientist	APD
O'NEILL, P M		FWS	222-S/MAINT.
Dearing, Bob		FWS	MAINT
Eric Root	Eric Root	FWS	MAINT
T Kimmel		RC 1st Line	RADCON
C Howard		Fom	Ops
Km Hall		Mgr	222-S
GL PARSONS		MOR	222S
James T. Hamilto-		Environmental	2225

ATTENDANCE ROSTER

Subject: Management Expectations Meeting	Date: 4/10/09
	Leader:

NAME (Print)	Signature	Position/Title	Organization
T.L. PILLING	[illegible]	FLM RADCON	WRPS
JOEL "DANE" BUTLER	[illegible]	222-S RadCon	
JR Prilucik	[illegible]	APM	
H.J. Huber	[illegible]	APD Chemist	
J. Frye	[illegible]	APD	
Cary Seidel	[illegible]	APD	
Bob B. Hardy	[illegible]	Fac. Mgr.	

ATTENDANCE ROSTER

Subject: Management Expectations Meeting	Date:
	Leader:

NAME (Print)	Signature	Position/Title	Organization
Keith J. Lawing	Keith J. Lawing	RADCON FLM	222-S / WRPS
Jim Duncan	Jim Duncan	Senior Engineer	222-S / WRPS
Dan Herting	Dan Herting	Chemist	ATG
John McCluskey	John McCluskey	Chemist	ADP
R. Wade Warrant	R. Wade Warrant	Chemist	AOP
RJ Greenough	RJ Greenough	Mgr	OPS

ATTENDANCE ROSTER

Subject:
Management Expectations Meeting

Date: 4-10-09

Leader:
BROSEE

NAME (Print)	Signature	Position/Title	Organization
FRANK OWEN		BD P.A.	BASE OPS
DON WHITE		SCIENTIST	LAB SUPPORT SERVICES

Task# WRPS-PER-2009-0385.4

E-STARS[R] Report
Task Detail Report
08/06/2009 1643

TASK INFORMATION			
Task#	WRPS-PER-2009-0385.4		
Subject	WRPS-PER-2009-0385; SIG; CC-04 Update operator continuing training material to include Human Performance Initiative (HPI) training. Deliverable: C		
Parent Task#	WRPS-PER-2009-0385	**Status**	CLOSED 06/25/2009
Reference	WRPS-PER-2009-0385	**Due**	08/11/2009
Originator	^PER CAs	**Priority**	Medium
Originator Phone		**Category**	PER
Origination Date	04/08/2009 1238	**Generic1**	None
Remote Task#		**Generic2**	None
Deliverable	PER Review	**Generic3**	None
Class	None	**View Permissions**	Global
Instructions	*No Instructions*		

ROUTING LISTS

1	Corrective Action	Inactive
	CC-04 Update operator continuing training material to include Human Performance Initiative (HPI) training. Deliverable: Copy of updated operator continuing training material. RESPONSIBLE MANAGER: When this corrective action is complete, enter a closure statement in E-STARS and close the E-STARS subtask. Refer to the Problem Evaluation Request procedure TFC-ESHQ-Q-C-C-01, Section 4.4 for closure documentation requirements	
	• Keith, Lloyd J - Assign - Completed with comments - 06/18/2009 1653 *Instructions:* ↳ *Routing List:* Route List - Inactive *Instructions:* • Jennings, Patrick (Rick) - Assign - Cancelled - 06/18/2009 1652	
	• Gregory, Rob - Review - Concur with comments - 06/22/2009 1306 *Instructions:*	
	• ^Independent Assessment Review - Review - Withdrawn - 04/16/2009 0750 *Instructions:* Independent Assessor Review	

ATTACHMENTS

Attachments	1. 0900518_09-ESQ-082_WRPS_-_[0903111137].pdf 2. 2009-0385.11 Additional Rosters.pdf 3. Concern 1 - Remedial CA, TFC-CHARTER-42.doc 4. Finding 1 - Remedial CA, Base Operations Shift Instructions 10-17-08.doc 5. Finding 1 - Remedial CA, EIR-2008-024.pdf 6. Finding 3 - Remedial CA, ATS-LO-200-110.doc 7. Finding 3 - Remedial CA, ERP-222S-009.doc 8. Finding 6 - Remedial CA, Course 35E001 ITEM Report.pdf

Task# WRPS-PER-2009-0385.4

	9. HPI...A Focus on Distraction_Classroom Presentation.ppsm 10. HPI...A Focus on Distraction_Classroom Presentation.ppt 11. Link to PER 12. RCA/CCA Report.pdf 13. SigPER 2009-0385.11 Support Docs.pdf
COMMENTS	
Poster	Keith, Lloyd J - 06/18/2009 1653
	Completed
	Material for Operator CT is developped and attached
Poster	Gregory, Rob (Mata, Beth L) - 06/22/2009 1306
	Concur
	Reviewed and concur with closure statement and objective evidence. BLM for REG
Poster	^PER CAs (Steelman, Tracy L (inactive)) - 06/25/2009 1033
	Steelman, Tracy L -- CLOSED
	Reviewed and closed. tls 6/25/09

TASK DUE DATE HISTORY

Modified	04/08/2009 1238 - ^PER CAs	**New Due Date**	08/11/2009 0000
Modified	04/08/2009 1238 - ^PER CAs	**New Due Date**	03/19/2010 0000

SUB TASK HISTORY

No Subtasks

-- end of report --

washingtonriver
protectionsolutions

TOC Training

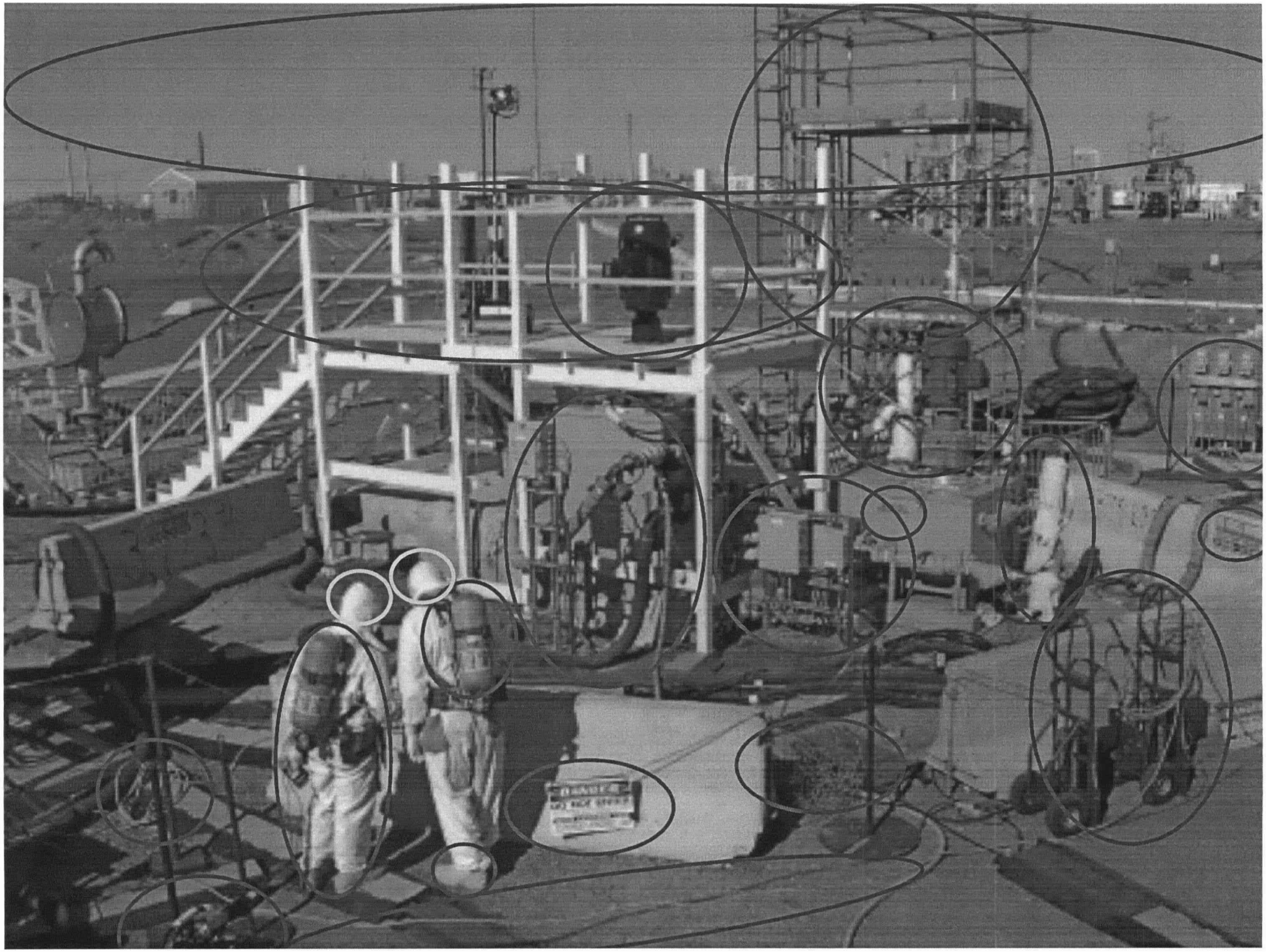

Session Objectives

- ✓ *Explain the balance between prevention and production.*
- ✓ *Explain the 5 HPI Principles.*
- ✓ *State the fundamental intention of HPI.*
- ✓ *Describe the importance of perspective and context as it relates to perpetuating the HPI philosophy.*
- ✓ *Explain how a "just culture" is a mechanism for perpetuating a low incidence of error.*
- ✓ *Explain how distractions are the set up for error.*
- ✓ *Describe the intent of the Error Prevention Framework.*
- ✓ *Describe the purpose of Error Precursors*

Balance between Prevention and Production

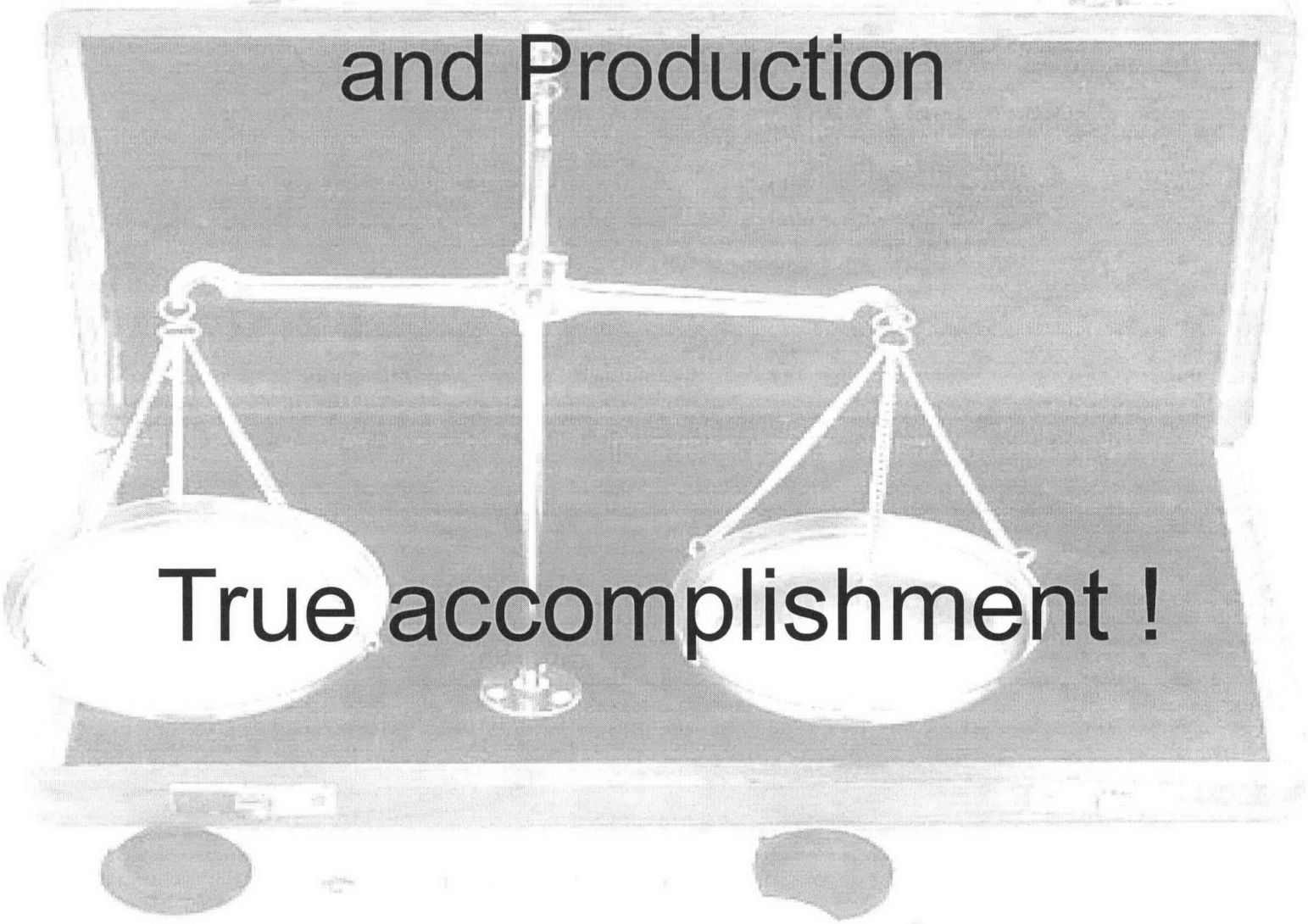

True accomplishment !

5 Human Performance Principles

1. Humans are fallible.
2. Error is predictable.
3. The organization influences behavior.
4. Behaviors are reinforced.
5. Events are avoidable.

The importance of HPI

To have participants understand that human error is inevitable. However, through the use of HPI tools, the number of errors can be reduced (never eliminated) thereby also decreasing the potential for significant events and the consequences of such events.

"Human Performance is about reducing errors and managing defenses to prevent significant events…" DOE

washington**river** **protection***solutions*

"…as much as eliminating error is fine in theory, the reality is, you will die or go broke trying to achieve it…"

Working Together

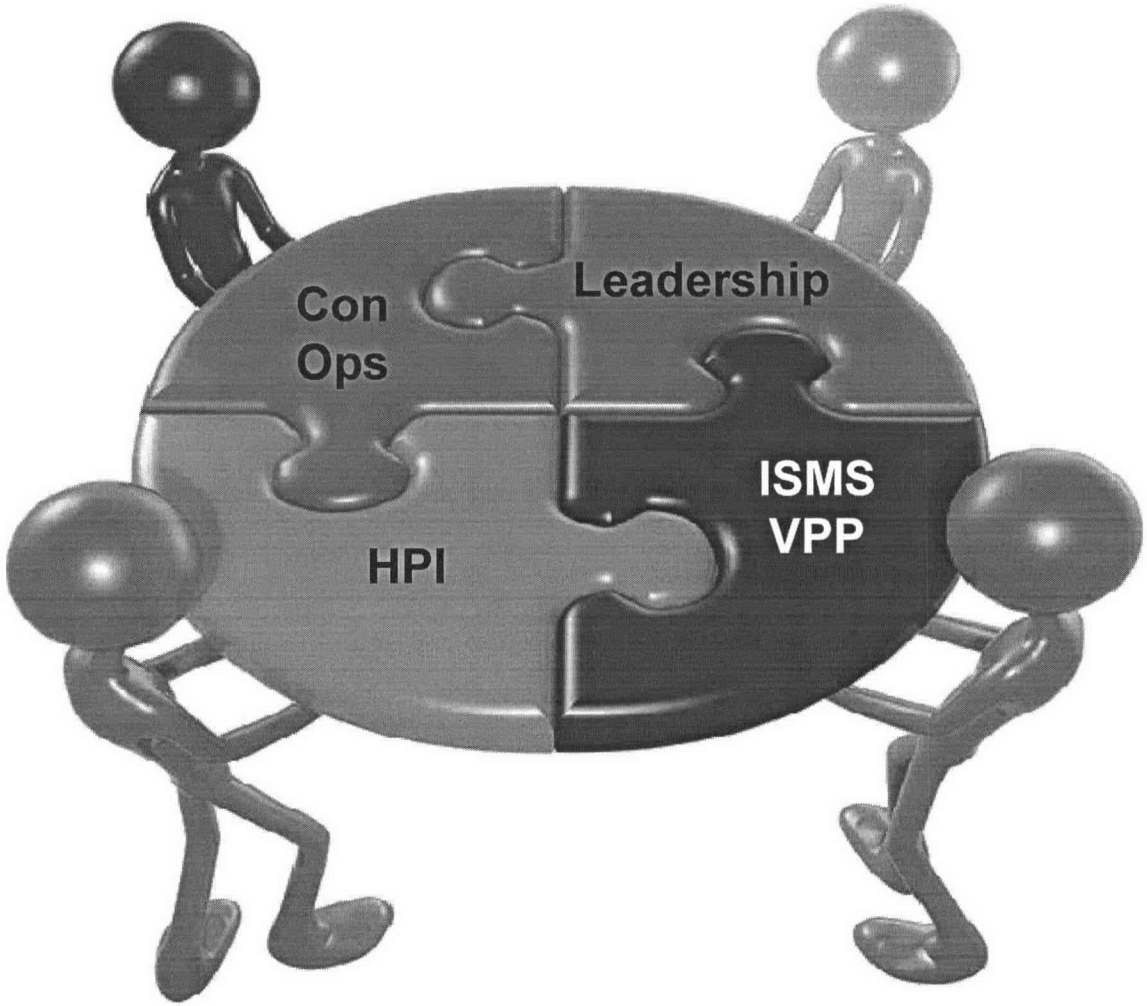

washington river
protection solutions

HPI is a PROACTIVE Strategic Approach

Events can be avoided reactively and proactively.

- Learning from our mistakes and the mistakes of others is reactive; it's after the fact.

- Anticipating how the next event or error can happen by applying the fundamentals of human performance is proactive.

washington river protection solutions

Error-Likely Situation

Error *Likely* *Situation*

Unintentional deviation from preferred behavior

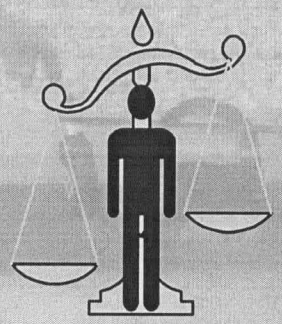

Job Site Conditions
- Task
- Individual

Degree of mismatch due to ***error precursors***

Source: Swain & Guttmann. *Handbook of Human Reliability Analysis with Emphasis on Nuclear Power Plant Applications.* U.S. Nuclear Regulatory Commission (NUREG/CR-1278), 1983.

washington**river** **protection***solutions*

A Matter of Perspective

A "point of view“. The choice of a context for opinions, beliefs and experiences.

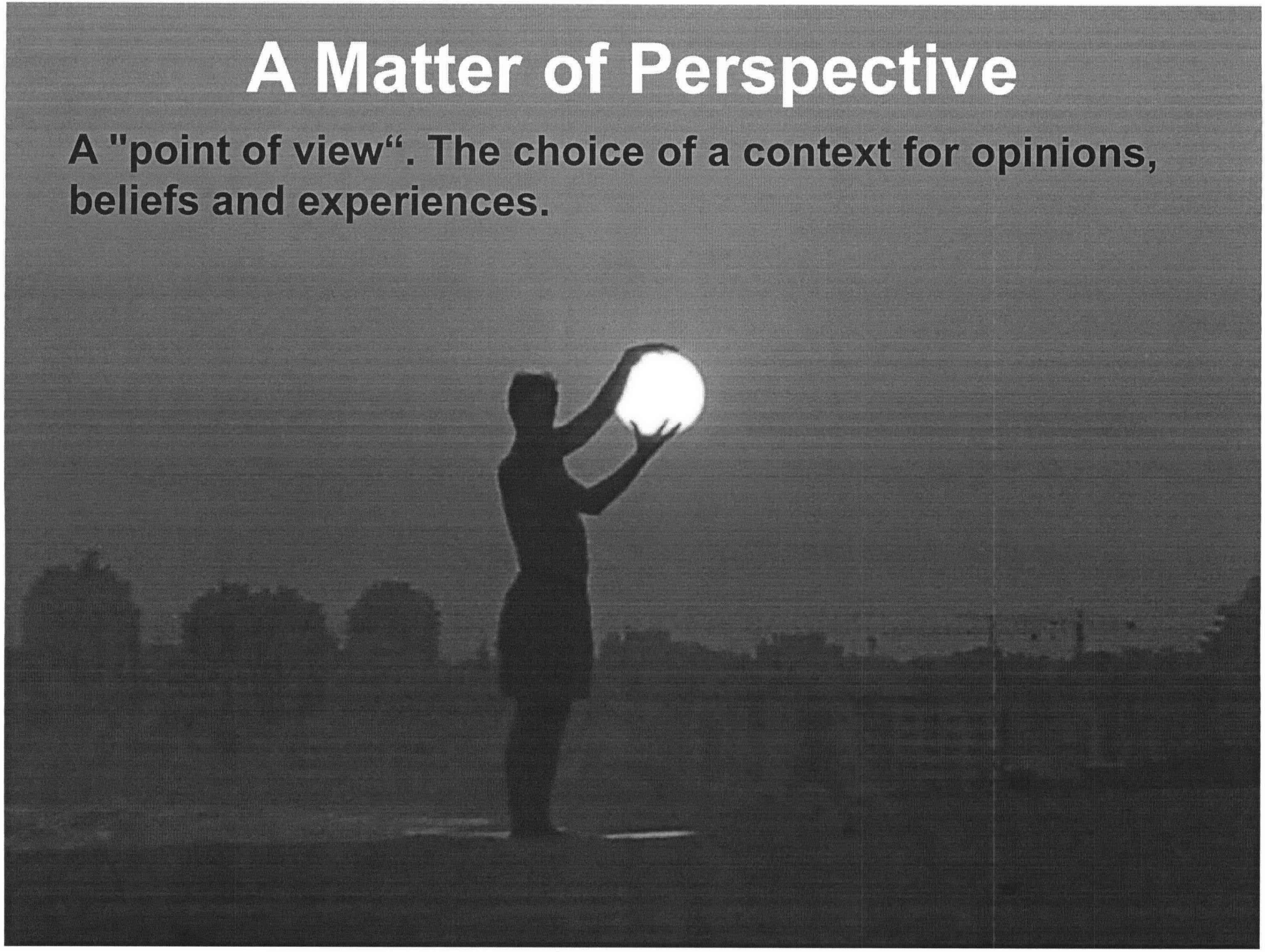

Perspective and context allow us to make sense of peoples behaviors *at the time of the error*.

People do not make mistakes intentionally !

washingtonriver protectionsolutions

What's the context of the matter ?

Why did a car speed past you at over 100mph ?

a. #@#$% crazy driver.
b. Someone late for work.
c. Had an extremely ill child inside.

Why was the girl rude to you at the coffee shop ?

a. Just a miserable person.
b. Found out she didn't get the promotion she was promised.
c. She was angry about being passed by a #@#$% crazy driver.

Why didn't Bob bring his wife a donut from the coffee shop (like he promised) ?

a. Because Bobs a forgetful idiot.
b. Because that "rude" girl at the donut shop forgot to put it in his carry out bag.
c. Because Bob got pulled over for driving 100+mph and gave it to the officer to let him go.

Do not judge (blame) without considering the context in which something happens.

washingtonriver protectionsolutions

HPI…a revolutionary idea !

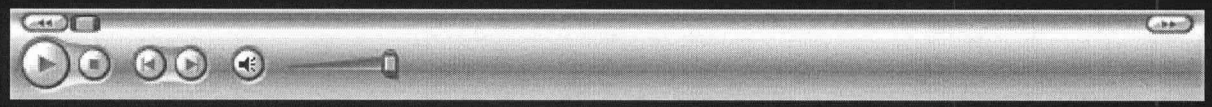

Just Culture

just ◊ culture |

An organization cannot learn from error and punish professional individuals at the same time. If a workplace believes errors will be punished, then information related to errors if not self revealing will likely remain unknown.

HPI concedes that a "Just Culture " perpetuates the reporting of errors while punishment results in the drastic reduction in error reporting leading to an increase in events.

ORIGIN sidney decker.: The Field Guide to Understanding Human Error

DISTRACTIONS

PAUSE, TAKE A STEP BACK

GET SOMEONE ELSE TO CHECK IT

Error Precursors

Unfavorable factors at the job site that increase the probability for error during performance of a task.

Work Environment	Task Demands
• Distractions / Interruptions	• Time pressure (in a hurry)
• Changes / Departures from routine	• High Workload (high memory requirements)
• Confusing displays or controls	• Simultaneous, multiple tasks
• Workarounds / Out of service instruments	• Repetitive actions / Monotony
• Hidden system response	• Irrecoverable acts
• Unexpected equipment conditions	• Interpretation requirements
• Lack of alternative indication	• Unclear goals, roles, & responsibilities
• Personality conflicts	• Lack of or unclear standards
Individual Capabilities	**Human Nature**
• Unfamiliarity w/ task / First time	• Stress
• Lack of knowledge (mental model)	• Habit patterns
• New technique not used before	• Assumptions
• Imprecise communication habits	• Complacency / Overconfidence
• Lack of proficiency / Inexperience	• Mind-set
• Indistinct problem-solving skills	• Inaccurate risk perception
• "Unsafe" attitude for critical tasks	• Mental shortcuts (biases)
• Illness / Fatigue	• Limited short-term memory

An error-likely situation—an error about to happen—typically exists when the demands of the task exceed the capabilities of the individual or when work conditions aggravate the limitations of human nature.

Event Prevention Framework

The Task Preview

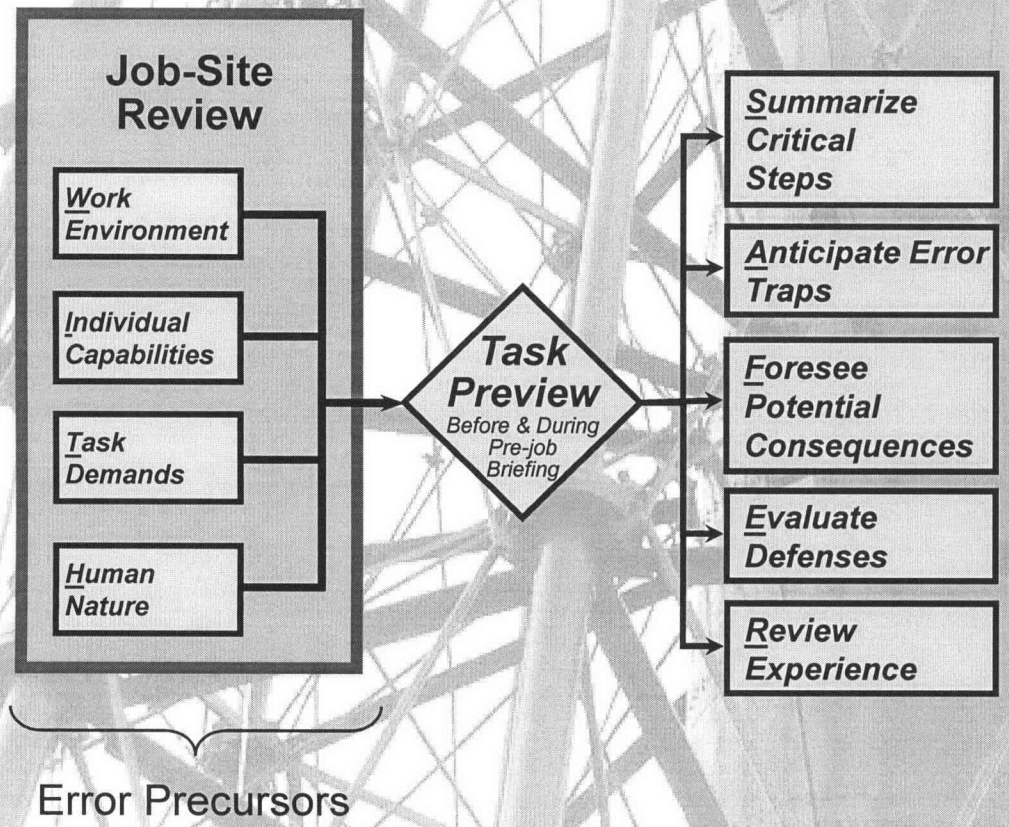

SAFER Dialogue

Summarize critical steps
Anticipate error traps or error likely situations
Foresee consequences
Evaluate defenses (the rule of three's)
Review operating experience

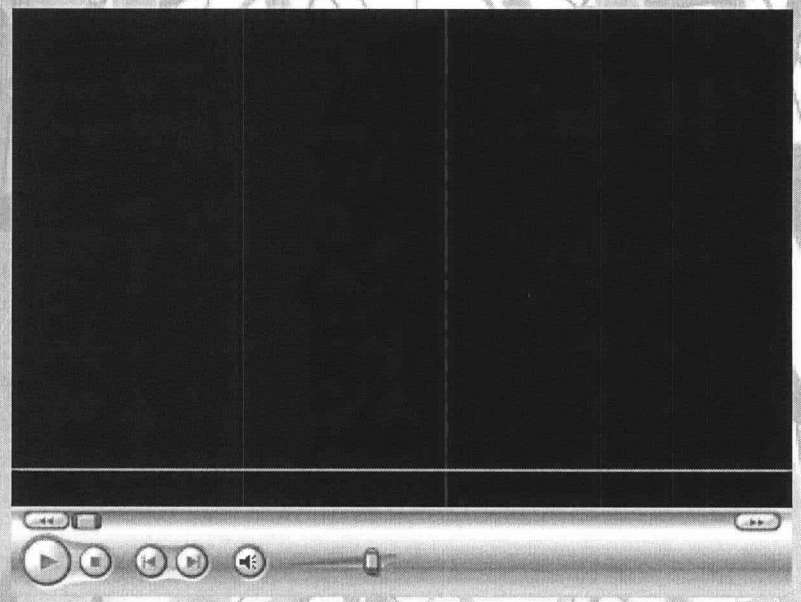

washington**river** **protection***solutions*

Situational Awareness

- Error Prevention Framework
- Task Preview
  - Review status prior to prejob
  - Procedures, work scope, critical steps, jobsite walkdown
- Questioning Attitude
- SAFER concept (**S**ummarize, **A**nticipate, **F**oresee, **E**valuate, **R**eview)

SAFER Steps

Five-Step Questioning Process

This five-step approach ensures that when workers leave the briefing, they understand the job and management expectations and have a questioning attitude that supports a conservative decision-making thought process.

1. **Have we done this job before?**
   - Do workers have the necessary training, knowledge, and proficiency to do the job?
   - Do the workers feel comfortable with their ability to do the task?
   - Should just-in-time training be provided?
   - Is there anything to learn from others who have done this before, either at your facility or from the industry?
   - Has the work team checked the Lesson-Learned Web site for any operating experience?

2. **What are the critical steps?**
   - What must absolutely go right during the job?
   - Is there a point of no return during the job, and has back-out criteria been discussed?
   - Has a thorough procedure and work package review been completed?
   - Has support needed from other departments been discussed and the supporting department been informed?

3. **What mistakes might be made?**
   - Are there any error-likely situations or error traps associated with the critical steps?
   - Are you in a hurry?
   - Will there be distractions or interruptions?
   - Are you doing several tasks simultaneously?
   - Have mistakes been made with this task before, especially at the critical steps?

4. **What is the worst thing that could happen to me, the facility, or the equipment?**
   - Could someone get hurt?
   - Could this cause the plant to shut down?
   - Would equipment damage occur?
   - Would work delays occur?
   - What additional defenses (if any) are needed?

5. **What kind of defenses should the work team consider and review?**
   - Have contingencies and recovery options been discussed should mistakes occur at the critical steps?
   - Can the job be performed as planned, or do changes need to be made?
   - Are additional clearances needed?
   - Is self-checking, peer-checking, place-keeping, or three-way communication going to be used?
   - What should be done if the original task changes to a different task, such as when preventative maintenance turns into corrective maintenance?
   - Has the briefing team decided whether to proceed with the task as planned?

washington**river** **protection***solutions*

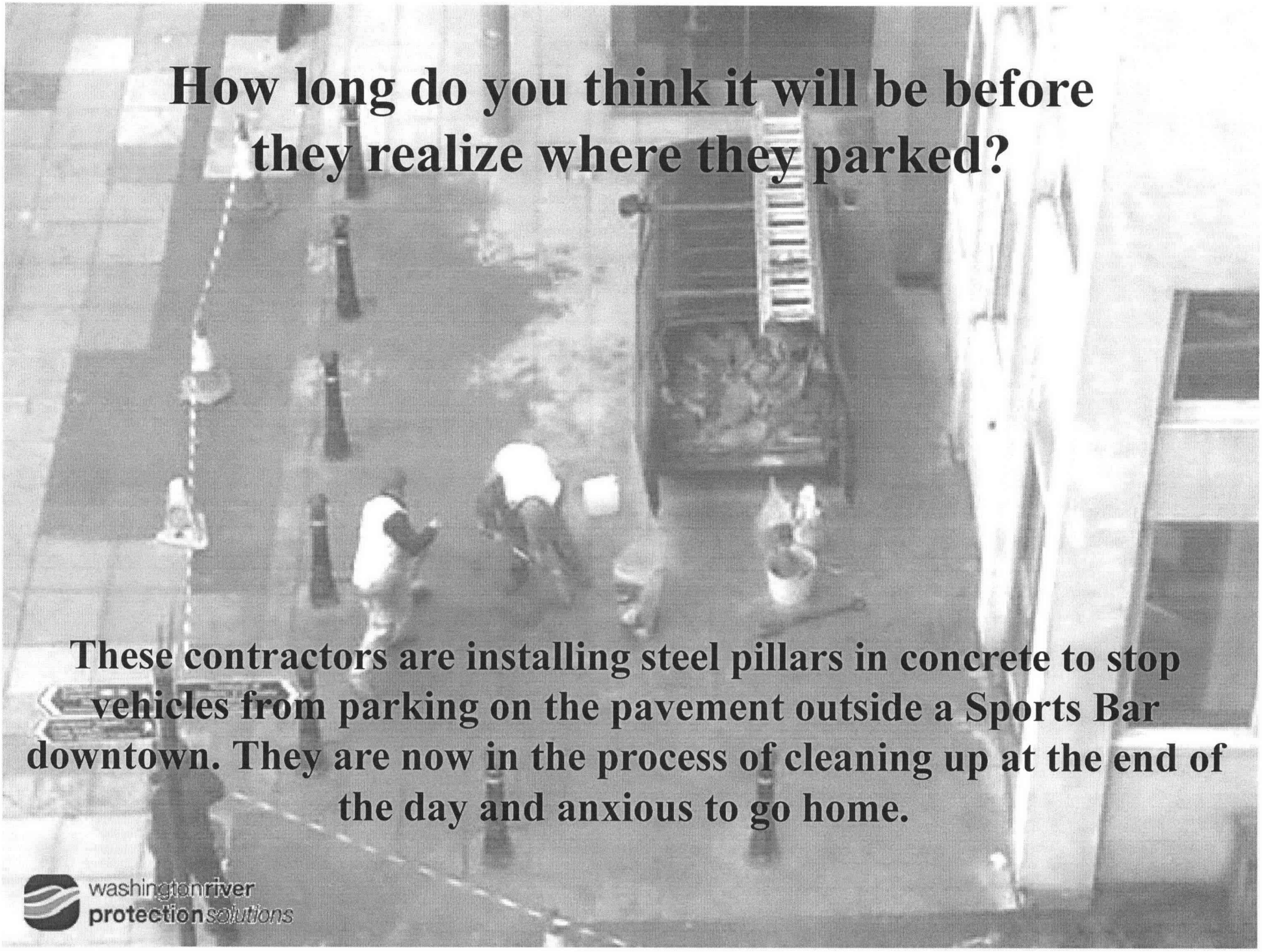
How long do you think it will be before they realize where they parked?
These contractors are installing steel pillars in concrete to stop vehicles from parking on the pavement outside a Sports Bar downtown. They are now in the process of cleaning up at the end of the day and anxious to go home.
washingtonriver
protectionsolutions

Human Performance Continuous Improvement

washington river protection solutions

Strengthening our Safety Culture with HPI

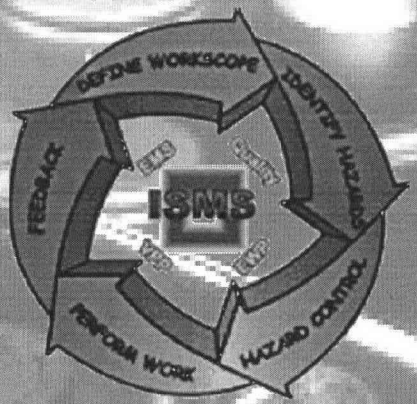

Department of Energy

VPP

Human Performance Improvement

Session Objectives

- ✓ *Explain the balance between prevention and production.*
- ✓ *Explain the 5 HPI Principles.*
- ✓ *State the fundamental intention of HPI.*
- ✓ *Describe the importance of perspective and context as it relates to perpetuating the HPI philosophy.*
- ✓ *Explain how a "just culture" is a mechanism for perpetuating a low incidence of error.*
- ✓ *Explain how distractions are the set up for error.*
- ✓ *Describe the intent of the Error Prevention Framework.*
- ✓ *Describe the purpose of Error Precursors*

Thank you for your participation in today's session.

Getting work done safely happens on purpose … Not by Accident !

washington river protection solutions

Task# WRPS-PER-2009-0385.5

E-STARS[R] Report
Task Detail Report
08/06/2009 1646

TASK INFORMATION			
Task#	WRPS-PER-2009-0385.5		
Subject	WRPS-PER-2009-0385; SIG; CC-05 Reinforce the requirement for Shift Operations to perform one table-top drill per shift per month. The table-top drill		
Parent Task#	WRPS-PER-2009-0385	**Status**	CLOSED 05/04/2009
Reference	WRPS-PER-2009-0385	**Due**	05/05/2009
Originator	^PER CAs	**Priority**	Medium
Originator Phone		**Category**	PER
Origination Date	04/08/2009 1238	**Generic1**	None
Remote Task#		**Generic2**	None
Deliverable	PER Review	**Generic3**	None
Class	None	**View Permissions**	Global
Instructions	*No Instructions*		

ROUTING LISTS

1	Corrective Action	Inactive
	CC-05 Reinforce the requirement for Shift Operations to perform one table-top drill per shift per month. The table-top drill should involve Shift personnel (Nuclear Chemical Operators (NCOs), Health Physics Technicians (HPTs), and Industrial Hygiene Technicians (IHTs), as available) and consider "what-if" situations. Scenarios to evaluate should include review of Alarm Response Procedures (ARPs), Abnormal Operating Procedures (AOPs)and Emergency Response Procedures (ERPs). Communicate expectations to Shift Managers. Deliverable: Issued memo of expectationsto Shift Managers and tickler (see TF-OPS-OPER-CD-30) for reminder. RESPONSIBLE MANAGER: When this corrective action is complete, enter a closure statement in E-STARS and close the E-STARS subtask. Refer to the Problem Evaluation Request procedure TFC-ESHQ-Q-C-C-01, Section 4.4 for closure documentation requirements	
	• Owen, Peter - Assign - Completed with comments - 04/24/2009 1122 *Instructions:*	
	• Gregory, Rob - Review - Concur with comments - 04/27/2009 1314 *Instructions:*	
	• ^Independent Assessment Review - Review - Withdrawn - 04/16/2009 0750 *Instructions:* Independent Assessor Review	

ATTACHMENTS

Attachments	1. 0900518_09-ESQ-082_WRPS_-_[0903111137].pdf 2. 2009-0385.11 Additional Rosters.pdf 3. Concern 1 - Remedial CA, TFC-CHARTER-42.doc 4. Finding 1 - Remedial CA, Base Operations Shift Instructions 10-17-08.doc 5. Finding 1 - Remedial CA, EIR-2008-024.pdf 6. Finding 3 - Remedial CA, ATS-LO-200-110.doc 7. Finding 3 - Remedial CA, ERP-222S-009.doc 8. Finding 6 - Remedial CA, Course 35E001 ITEM Report.pdf

Task# WRPS-PER-2009-0385.5

	9. Link to PER 10. Message to Shift Managers 11. Table-Top Drill Expectation 12. RCA/CCA Report.pdf 13. SigPER 2009-0385.11 Support Docs.pdf 14. Table-Top Drill Tickler
COMMENTS	
Poster	Owen, Peter - 04/24/2009 1122
	Owen, Pete -- Completed
	During the Shift Manager Staff Meeting held on 4/23/2009, the expectation to perform monthly Table-Top drills was set with the Shift Managers (see attached copy of agenda). All Shift Managers agreed that this program was worthwhile and stated that they will recommence performance of these drills. Addtionally, a tickler was generated to remind the Shifts to hold a monthly table top drill (see attached tickler). This tickler is set up for Sunday day shift. An email was also sent to all shift managers (attached) informing them that some of these sessions would be observed and to let senior management know what time they would be performed. This activity is complete. Pete Owen Manager, Shift Operations
Poster	Gregory, Rob (Mata, Beth L) - 04/27/2009 1314
	Concur
	Reviewed and concur with closure statement and closure documentation. BLM for REG
Poster	^PER CAs (Steelman, Tracy L (inactive)) - 05/04/2009 0940
	Steelman, Tracy L -- CLOSED
	Reviewed and closed. tls 5/4/09

TASK DUE DATE HISTORY

Modified	04/08/2009 1238 - ^PER CAs	**New Due Date**	05/05/2009 0000
Modified	04/08/2009 1238 - ^PER CAs	**New Due Date**	03/19/2010 0000

SUB TASK HISTORY

No Subtasks

-- end of report --

Message

From: Owen, Peter L

Sent: Friday, April 24, 2009 11:19 AM

To: Sainz, Steven C; Anderson, Rick A; Andrews, Jeffrey E; Garrett, Mark S; Gilles, David A (Dave); Harrison, W D (Dale); Higham, Dale B; Johnson, Brian A; Malhan, Rajiv; Malhan, Rakesh; Strasser, David W; Treadway, Phillip L; Walker, Lewis M (Lew); Wallgren, Carl B; Raven, Rebecca P (Bexa)

Cc: Owen, Peter L; Tackett, Elizabeth; Gregory, Robert E (Rob)

Subject: RE: NEW TICKLERS

Lady and Gentlemen,

At yesterday's Shift Manager Staff Meeting, we set the expectation that we would run a table-top drill for each shift each month. Steven has put in a weekly tickler for Sunday day shift. This is one of the corrective actions that has come out of the EP Common Cause Analysis (CCA) that was just completed. Another CA from that CCA is for senior management to perform MOPs on these Table-Top Drills. For the next several months, we need to know approximately what time on Sunday you are going to hold your Table-Top drill so we can make arrangements to be out here to observe it. Prior to leaving after Monday night shift, please send a message to me with the time you are planning for and I will let senior management know. Thank you.

Pete Owen, PMP
Manager, Shift Operations
MO-268/Rm 3, MSIN S5-15
509-373-1107 (Office)
509-438-4789 (Cell)
Peter_L_Owen@rl.gov

From: Sainz, Steven C
Sent: Friday, April 24, 2009 10:16 AM
To: Anderson, Rick A; Andrews, Jeffrey E; Garrett, Mark S; Gilles, David A (Dave); Harrison, W D (Dale); Higham, Dale B; Johnson, Brian A; Malhan, Rajiv; Malhan, Rakesh; Owen, Peter L; Strasser, David W; Treadway, Phillip L; Walker, Lewis M (Lew); Wallgren, Carl B
Subject: NEW TICKLERS

Attached are two new ticklers:

BO-615 is regarding HMI screens & will start on 4/28
BO-616 is regarding table top drills & will start on this Sunday 4/26

I will place both of these in the tickler binder.

Steven Sainz
Base Operations Shift Office
373-1394/438-6068

Shift Manager Meeting Agenda – 4/23/09

1. Mark Steelman presentation on Conflict Resolution and Dealing With Difficult People
    - Noticeable increase in professionalism in the Shift Office
    - With the large number of people being hired, there is the possibility of an increased number of confrontations

2. Tabletop Drill Program
    - In accordance with procedure TFC-OPS-EP-CD-02.1
    - One tabletop drill per shift per month
    - Develop scenario bank

3. Procedure Compliance / AOP Response
    - Mandatory
    - Use hard copy of AOP to tracks steps completed
    - Familiarize yourselves with entry criteria – when in doubt, look it up
    - If unsure entry criteria is met (unknown alarm on exhauster), enter AOP until verification that AOP is not applicable

4. Promulgate farm status (open/closed) to all crew members
    - Allows shift HPTs to get required surveys done prior to next work day
    - Minimizes impacts/delays the next work day

5. MOPs for Con Ops Assessment (ISMS)
    - ISMS Assessment in progress
    - Each Senior Shift Manager and Shift Manager perform a MOP on a Con Ops Chapter
    - Due by 5/15/09
    - Bring problem areas to management attention as soon as they are identified

6. Processing Procedure Changes in the Middle of a Procedure
    - See Standing Order

7. Table-Top Procedure Reviews
    - Develop questions based on current revision of procedure
    - Schedule time, date, and location of session at least 3 days in advance

- Hold session as scheduled
- Don't wait for observers
- Document attendance on Course Completion Roster and forward CCR and copy of questions to Pete

8. Red-Circled Rounds Sheets
    - Collect copies of Rounds Sheets that have red-circled readings for 7 days or more
    - Ensure information regarding red-circles is accurate and up to date
    - Deliver all copies at the end of the month to Tammy Reynolds

Title: TABLE TOP DRILLS
System:
Requirement:
Frequency: WEEKLY
Perform On: Reference Only

Tickler Number: BO-616
Shift: DAY SHIFT OPS
Assigned: SOM/OE
Schedule Code: SU0

TABLE TOP DRILLS

Perform one table-top drill per shift per month. The table-top drill should involve Shift personnel (Nuclear Chemical Operators (NCOs), Health Physics Technicians (HPTs), and Industrial Hygiene Technicians (IHTs), as available) and consider "what-if" situations. Scenarios to evaluate should include review of Alarm Response Procedures (ARPs), Abnormal Operating Procedures (AOPs)and Emergency Response Procedures (ERPs).

Drill Scenario evaluated

_____

Applicable Procedures, ARPs and AOPs used

_____

Shift Manager (sign and date) _____

Task# WRPS-PER-2009-0385.6

E-STARS[R] Report
Task Detail Report
08/06/2009 1648

TASK INFORMATION			
Task#	WRPS-PER-2009-0385.6		
Subject	WRPS-PER-2009-0385; SIG; CC-06 Perform at least six WRPS senior management oversight observations of table-top drills to monitor and ensure effectiven		
Parent Task#	WRPS-PER-2009-0385	**Status**	CLOSED 07/28/2009
Reference	WRPS-PER-2009-0385	**Due**	08/06/2009
Originator	^PER CAs	**Priority**	Medium
Originator Phone		**Category**	PER
Origination Date	04/08/2009 1238	**Generic1**	None
Remote Task#		**Generic2**	None
Deliverable	PER Review	**Generic3**	None
Class	None	**View Permissions**	Global
Instructions	*No Instructions*		

ROUTING LISTS

1	Corrective Action	Inactive
	CC-06 Perform at least six WRPS senior management oversight observations of table-top drills to monitor and ensure effectiveness. Continue oversight until satisfactory performance is achieved. Deliverable: Document observations on MOP form. RESPONSIBLE MANAGER: When this corrective action is complete, enter a closure statement in E-STARS and close the E-STARS subtask. Refer to the Problem Evaluation Request procedure TFC-ESHQ-Q-C-C-01, Section 4.4 for closure documentation requirements	
	• Gregory, Rob - Assign - Completed with comments - 07/28/2009 1044 *Instructions:*	
	• ^Independent Assessment Review - Review - Withdrawn - 04/16/2009 0751 *Instructions:* Independent Assessor Review	

ATTACHMENTS

Attachments	1. 0900518_09-ESQ-082_WRPS_-_[0903111137].pdf 2. 2009-0385.11 Additional Rosters.pdf 3. Concern 1 - Remedial CA, TFC-CHARTER-42.doc 4. Finding 1 - Remedial CA, Base Operations Shift Instructions 10-17-08.doc 5. Finding 1 - Remedial CA, EIR-2008-024.pdf 6. Finding 3 - Remedial CA, ATS-LO-200-110.doc 7. Finding 3 - Remedial CA, ERP-222S-009.doc 8. Finding 6 - Remedial CA, Course 35E001 ITEM Report.pdf 9. Link to PER 10. RCA/CCA Report.pdf 11. SigPER 2009-0385.11 Support Docs.pdf 12. TABLETOP MOP 4-5-09.pdf 13. Tabletop MOPs.pdf

COMMENTS

Task# WRPS-PER-2009-0385.6			
Poster	Gregory, Rob (Mata, Beth L) - 07/28/2009 1044		
	Completed		
	Six senior management oversight MOPs were performed on Table Top Drills conducted within Base Operations. Overall the results indicate satisfactory performance by the Shift Managers and drill participants. The drill scenarios included waste spill, fire, injured worker, transfer, and response to lightning. Many of the MOPs identified areas of improvements related to procedures or processes and were either corrected immediately or referred to PERs for tracking. It is determined that performance of Table Top Drills is satisfactory and is proved to be a useful tool for identifying areas of improvement. This action is complete.		
Poster	^PER CAs (Steelman, Tracy L (inactive)) - 07/28/2009 1131		
	Steelman, Tracy L -- CLOSED		
	Reviewed and closed. tls 7/28/09		
TASK DUE DATE HISTORY			
Modified	04/08/2009 1238 - ^PER CAs	**New Due Date**	08/06/2009 0000
Modified	04/08/2009 1238 - ^PER CAs	**New Due Date**	03/19/2010 0000
SUB TASK HISTORY			
No Subtasks			

-- end of report --

MANAGEMENT OBSERVATION CHECKLIST

Name:	Date:	Assessment Location/Job:
F. A. SCHMORDE	04/05/09	TABLETOP DRILL

AREAS OF FOCUS (SAFETY)

☐ Housekeeping	☐ Adequate Cleaning Schedule Maintained ☐ STOP for Each Other Observations	☐ Orderliness ☐ SEE Safety	☐ Clean ☐ Work Areas Dry and Clean
☐ Communications	☐ Complacent ☐ Actions of People	☐ Fatigue ☐ Mind and Eyes on Task	☐ Position of People ☐ Rushing
☐ Ergonomics	☐ Posture ☐ Work Area Design ☐ Temperature	☐ Types and Number of Motions ☐ Tools and Grips ☐ Lighting	☐ Load Handled ☐ Vibration ☐ Noise
☐ Personal Protective Equipment	☐ Eyes and Face ☐ Hands and Arms	☐ Ears ☐ Feet and Legs	☐ Head ☐ Trunk
☐ Tools and Equipment	☐ Right for Job ☐ Carried or Stored Properly	☐ Used Correctly ☐ Guides in Place (Adequate)	☐ In Safe Condition
☐ Procedure Compliance	☐ Right Revision Used ☐ Not Followed ☐ Missing Step	☐ No Work Package/Procedure ☐ Step Not Performed	☐ Opened But Not Referenced ☐ Missed Hold Point

OBSERVATION TOPIC	Criteria and Requirements	Method of Assessment Against the Requirements	What Was Observed/ Documents Reviewed/ Who Interviewed
☐ Industrial Safety			
☐ Maintenance			
☐ Material Condition			
☐ Configuration Management			
☐ Resource Allocation			
☐ On-Shift Training/Drills			
☐ Lockout/Tagout			
☐ Pre-Job Meeting - Form A-6003-288			
☐ RadCon Practices - Form A-6003-290			
☒ Other	TFC-OPS-EP-CD-02.1	MONITOR AS SSW	CREW D 2SM'S, IHT, 4 NCO'S

ISMS CORE FUNCTIONS REVIEWED

- ☐ Work Scope Defined
- ☐ Hazards Analyzed
- ☐ Hazard Control Developed and Implemented
- ☐ Work Performed Within the Controls
- ☒ Feedback and Continuous Improvement Provided

TRACKING AND TRENDING

Hours of Observation	2
Number of Unsafe Acts	0
Number of Errors Observed	0
Number of Incidents Repeated	0
Number of Unsafe Conditions	0

SUMMARY OF RESULTS, COMMENTS, OR OBSERVATIONS (Attach additional pages as necessary):

Monitored the tabletop drill for TF-AOP-014 "Response to Lightning"

Though this tabletop drill met the limited guidance of TFC-OPS-EP-CD-02.1 "BASE OPERATIONS/ SST RETRIEVAL & CLOSURE OPERATIONS TABLETOP DRILL PROGRAM" I evaluated this activity as LESS THAN ADEQUATE. This activity would have been more accurately characterized as a training lecture. Additionally, TF-AOP-014 by itself is a poor choice for a tabletop as there is almost no actions for those shift personnel other than the Shift Manager, who in this case, was leading this event.

MANAGEMENT OBSERVATION CHECKLIST (Continued)

Name:	Date:	Assessment Location/Job:
F. A. SCHMORDE	04/05/09	TABLETOP DRILL

AOP procedure problem.-- Step 3.1.2 incorrectly directs personnel working outdoors to stop work and "TAKE COVER". Personnel should "TAKE SHELTER" as correctly stated in Table 1, response #3. TAKE COVER requires securing ventilation, etc.

I recommend the following corrective actions to be taken;

1. Flesh-out the Guidance in TFC-OPS-EP-CD-02.1 following elements;
   a. Assign personnel to job assignments and have them respond as they would have responded in the field. (Using three-way communication, finding the correct procedures, describing the alarms and indications they would expect, describing in detail how they would accomplish their actions, etc.
   b. Do not provide copies of the procedures to all until they have found them themselves and it is necessary for the discussion to proceed.
   c. Discussions should be lead by asking only questions whenever possible. It should never be a lecture. (How would you..?, Where would you go..?,Who would you inform?, etc.)
   d. Demand that all persons participate.
   e. Leader should provide initiating conditions and other indications necessary for the team to analyze, taking care that you do not compromise the drill and the ability to evaluate the team's responses.
2. Have Emergency Preparedness conduct these tabletops until our program matures.
3. E.P. provide a tabletop drill schedule with scenarios approved by Operations.

I would be most willing to assist in our program.

F.A. SCHMORDE
308-1670

Tank Farm Entered? ○ Yes ◉ No

PER ISSUED? ○ Yes ◉ No PER Identification N/A

MANAGEMENT OBSERVATION CHECKLIST

Name:	Date:	Assessment Location/Job:
LM Walker	7-23-09	242-A/Table Top Drill

AREAS OF FOCUS (SAFETY)

☐ Housekeeping	☐ Adequate Cleaning Schedule Maintained ☐ STOP for Each Other Observations	☐ Orderliness ☐ SEE Safety	☐ Clean ☐ Work Areas Dry and Clean
☐ Communications	☐ Complacent ☐ Actions of People	☐ Fatigue ☐ Mind and Eyes on Task	☐ Position of People ☐ Rushing
☐ Ergonomics	☐ Posture ☐ Work Area Design ☐ Temperature	☐ Types and Number of Motions ☐ Tools and Grips ☐ Lighting	☐ Load Handled ☐ Vibration ☐ Noise
☐ Personal Protective Equipment	☐ Eyes and Face ☐ Hands and Arms	☐ Ears ☐ Feet and Legs	☐ Head ☐ Trunk
☐ Tools and Equipment	☐ Right for Job ☐ Carried or Stored Properly	☐ Used Correctly ☐ Guides in Place (Adequate)	☐ In Safe Condition
☐ Procedure Compliance	☐ Right Revision Used ☐ Not Followed ☐ Missing Step	☐ No Work Package/Procedure ☐ Step Not Performed	☐ Opened But Not Referenced ☐ Missed Hold Point

OBSERVATION TOPIC	Criteria and Requirements	Method of Assessment Against the Requirements	What Was Observed/ Documents Reviewed/ Who Interviewed
☐ Industrial Safety			
☐ Maintenance			
☐ Material Condition			
☐ Configuration Management			
☐ Resource Allocation			
☐ On-Shift Training/Drills			
☐ Lockout/Tagout			
☐ Pre-Job Meeting - Form A-6003-288			
☐ RadCon Practices - Form A-6003-290			
☒ Other Table Top Drill	DOE/RL-94-02, DOE-0223, ARP-T-601-012, TF-AOP-EVP-009, TF-ERP-EVAP-005	Visual	Table Top Drill of 242-A Waste Leak into the pump room (draft EAL's)

ISMS CORE FUNCTIONS REVIEWED

- ☒ Work Scope Defined
- ☒ Hazards Analyzed
- ☐ Hazard Control Developed and Implemented
- ☒ Work Performed Within the Controls
- ☒ Feedback and Continuous Improvement Provided

TRACKING AND TRENDING

Hours of Observation	1
Number of Unsafe Acts	0
Number of Errors Observed	0
Number of Incidents Repeated	0
Number of Unsafe Conditions	0

SUMMARY OF RESULTS, COMMENTS, OR OBSERVATIONS (Attach additional pages as necessary):

This MOP documents the observed results from a table top drill of a waste leak in the 242-A pump room. The drill was conducted on night shift July 22, 2009 with the Base Operations A-Shift Senior Shift Manager (SSM). The object of the drill was to follow-up on recent training the SSM received on the new proposed Emergency Action Levels (EALs) for the Evaporator. Many positive observations were noted:

1) The Drill Coordinator played the role of the 242-A Shift Manager (SM) and was stationed

Name:	Date:	Assessment Location/Job:
LM Walker	7-23-09	242-A/Table Top Drill

at the Evaporator facility providing the necessary drill information to the SSW;
2) The On-duty A-1 operator participated in the drill,using various procedures and duty cards, and provided drill information to the 242-A SM.
3) Performance of the SSM during the drill was accurate, responsive, timely and professional.

By being at the facility the Drill Coordinator (242-A SM) had access to the various procedures and duty cards required to perform facility corrective actions and answer questions asked by the SSM during the drill, simulating real life conditions. The A-1 operator responded to the situation and used the ARP with the AOP and ERP duty cards, also simulating real life conditions. When in phone communication with the 242-A SM, the SSM used very good three-way communication, asked the right questions to understand the situation and assist the 242-A SM in responding, and kept the conversions short and to the point.

Upon receiving the initial notification that a waste spill had occurred in the 242-A Evaporator pump room accompanied by a high-high sump level alarm, the SSM immediately recognized that the situation met the initiating condition for EAL RLEP 1.0-Appendix 1-2A, Table 1B. During the initial notification by the 242-A SM to the SSM, the 242-A SM relinquished Building Emergency Director (BED) duties to the SSM, the SSM confirmed several times by way of three way communication with the 242-A SM that they (SSM)how had assumed the duties of the BED.

A self identified observation noted by the drill participants was the need to work within three different procedures (i.e., ART-T-601-012, Respond to P-B-1 Graphic #12 Alarms at the 242-A Evaporator; TF-AOP-EVAP-009, Response to Process Upset; and, TF-ERP-EVAP-005, 242-A Respond to Evaporator High Radiogenic Release)to place the Evaporator facility in a safe condition based upon the drill scenario. 242-A Evaporator Facility Operations and Emergency Management organization will evaluate need for multiple procedures and make a recommendation for improvement.

Tank Farm Entered? ○ Yes ◉ No

PER ISSUED? ○ Yes ◉ No PER Identification _____

MANAGEMENT OBSERVATION CHECKLIST

Name:	Date:	Assessment Location/Job:
Robert Gregory	7/15/09	MO-266 Table Top Drill

AREAS OF FOCUS (SAFETY)

☐ Housekeeping	☐ Adequate Cleaning Schedule Maintained ☐ STOP for Each Other Observations	☐ Orderliness ☐ SEE Safety	☐ Clean ☐ Work Areas Dry and Clean
☒ Communications	☐ Complacent ☐ Actions of People	☐ Fatigue ☐ Mind and Eyes on Task	☐ Position of People ☐ Rushing
☐ Ergonomics	☐ Posture ☐ Work Area Design ☐ Temperature	☐ Types and Number of Motions ☐ Tools and Grips ☐ Lighting	☐ Load Handled ☐ Vibration ☐ Noise
☐ Personal Protective Equipment	☐ Eyes and Face ☐ Hands and Arms	☐ Ears ☐ Feet and Legs	☐ Head ☐ Trunk
☐ Tools and Equipment	☐ Right for Job ☐ Carried or Stored Properly	☐ Used Correctly ☐ Guides in Place (Adequate)	☐ In Safe Condition
☒ Procedure Compliance	☐ Right Revision Used ☐ Not Followed ☐ Missing Step	☐ No Work Package/Procedure ☐ Step Not Performed	☐ Opened But Not Referenced ☐ Missed Hold Point

OBSERVATION TOPIC	Criteria and Requirements	Method of Assessment Against the Requirements	What Was Observed/ Documents Reviewed/ Who Interviewed
☐ Industrial Safety ☐ Maintenance ☐ Material Condition ☐ Configuration Management ☐ Resource Allocation ☐ On-Shift Training/Drills ☐ Lockout/Tagout ☐ Pre-Job Meeting - Form A-6003-288 ☐ RadCon Practices - Form A-6003-290 ☒ Other Table Top Drill	TF-AOP-007 TF-ERP-001 TF-ERP-006	Table top drill/ discussion	See comments below

ISMS CORE FUNCTIONS REVIEWED

- ☒ Work Scope Defined
- ☒ Hazards Analyzed
- ☒ Hazard Control Developed and Implemented
- ☒ Work Performed Within the Controls
- ☒ Feedback and Continuous Improvement Provided

TRACKING AND TRENDING

Hours of Observation	1.0
Number of Unsafe Acts	0
Number of Errors Observed	
Number of Incidents Repeated	0
Number of Unsafe Conditions	

SUMMARY OF RESULTS, COMMENTS, OR OBSERVATIONS (Attach additional pages as necessary):

Performed SSW observation of "B" shift performing a Table Top Drill. The drill initiated with TF-AOP-007 Hanford Site Range Fire. The scope of the drill also include actions within TF-ERP-001 Tank Farms Take Cover/Personnel Accountability/and Area Evacuation and TF-ERP-006 Facility Fire Response.

The table top drill had full "B" shift participation which included SSM, SM, NCO(s), RCT(s) and IH(s) technicians. There was good discussion/interaction among all participants. The SOM did a outstanding job answering questions and what if scenarios throughout table top

Name:	Date:	Assessment Location/Job:
Robert Gregory	7/15/09	MO-266 Table Top Drill

drill. The SSM continually emphasized the number one priority in all emergency responses is to protect the people!

As a result of the discussions/question during the drill the following action/resolution was taken (see below string of email messages);
From: Anderson, Rick A
Sent: Thursday, July 16, 2009 5:54 PM
To: Erickson, Todd
Cc: Gregory, Robert E (Rob)
Subject: RE: Tabletop drill

I miss stated on ERP-006 I looked at AOP's title. Thanks for the info. I do not see a need for any changes after your explanation.

Thanks!

Rick Anderson
Senior Shift Manager "B" Shift
Base Operations
373-2689/438-1354

From: Erickson, Todd
Sent: Thursday, July 16, 2009 3:20 PM
To: Anderson, Rick A
Cc: Erickson, Todd; Morales, Teodoro P (Ted)
Subject: FW: Tabletop drill

Rick,
Neglected one of the obvious points. Each of the Admin buildings has a designated BW and PAA's to help move people safely out or take cover.
Todd

From: Erickson, Todd
Sent: Thursday, July 16, 2009 2:33 PM
To: Anderson, Rick A
Cc: Erickson, Todd; Morales, Teodoro P (Ted)
Subject: RE: Tabletop drill

Rick,

In regard to:

1. The attachment 1 list for tank farm facilities in ERP-001 for personnel accountability does not include 242-A evaporator, I think it probably should. Also while we are looking at facilities take a look to see if other need to be added.

That would be because the 242-A Evaporator has TF-ERP-EVAP-001, 242-A Evaporator Take Cover. Step 2.1.5 has the Evaporator ensuring all non-essential personnel (other than any who may have been effected by Step 2.1.4) have been moved to the lunch room, and personnel accountability requirements are met.
And: Step 2.2.1 has the Evaporator notifying Base Operations SSM that the Evaporator is in take cover.

Name:	Date:	Assessment Location/Job:
Robert Gregory	7/15/09	MO-266 Table Top Drill

You have a procedure in place to report to the SSM. Do you feel you should have an additional link in your TF ERP to ensure that the Evaporator calls?

Regarding the facilities listed in attachment 1, step 2.1.2.1 has the SM identifying the "hazardous facilities" within the affected area. Do you know of any "hazardous" facilities that are not on the list and should be added?

Administrative buildings in the affected area are responding to the "Take Cover" and or "Evacuation" directions they receive from their computer screens/desk phone messages. Their Take Cover or Evacuation is directed by the EOC Protective Action Coordinator. See the third note under 2.1 Initial Actions 2 on page 5 of the TF-ERP-001.

2. The entry requirement for ERP-006 and Title is Hanford range fire. The question asked was what do we have in place besides general HGET training if a fire occurs in an admin building?

Neither the 242-A, 222-S or the TF ERP's use the words "Hanford Range Fire". The TF-ERP-006's title is "Facility Fire Response" issued 5/13/09. Might you have an old ERP copy in the binder??

• HGET is the primary source of information for new personnel and the required refresher for employees that have been here for a while.
• The "Facility Emergency Response Information Boards" in each facility give the information on BW, staging area, utility shutoffs, etc in case one forgets.
• TFC-BSM-FPM_PR-CE-04, Building Management, Step 4.2.5, has the Building Manager meeting with all new residents within one week to review the building emergency plans (staging areas, first aid boxes, automatic electronic defibrillator (AED) locations, fire extinguishers, etc.)
• TFC-BSM-CP_CPR-C-05, Procurement of Services, Section 4.5.4, the BTR ensures that subcontracted personnel are current with relevant Hanford General Employee Training or Hanford Site Orientation.
• HR's New Employee checklist covers Evacuation plans and HGET requirements.

Hope this answers your questions. Let me know if it doesn't.
Todd

From: Morales, Teodoro P (Ted)
Sent: Thursday, July 16, 2009 11:52 AM
To: Erickson, Todd
Subject: FW: Tabletop drill

Todd,

Can you answer Rick's questions? I'm working on few things right now.

From: Anderson, Rick A
Sent: Wednesday, July 15, 2009 9:17 PM
To: Garrett, Mark S; Morales, Teodoro P (Ted)
Cc: Gregory, Robert E (Rob)
Subject: Tabletop drill

Had a couple of questions during our Tabletop drill tonight that Gregory attended. Can you

Name:	Date:	Assessment Location/Job:
Robert Gregory	7/15/09	MO-266 Table Top Drill

please follow up.

3. The attachment 1 list for tank farm facilities in ERP-001 for personnel accountability does not include 242-A evaporator, I think it probably should. Also while we are looking at facilities take a look to see if other need to be added.
4. The entry requirement for ERP-006 and Title is Hanford range fire. The question asked was what do we have in place besides general HGET training if a fire occurs in an admin building?

Rick Anderson
Senior Shift Manager "B" Shift
Base Operations
373-2689/438-1354

No additional actions are required.

Tank Farm Entered? ○ Yes ◉ No
PER ISSUED? ○ Yes ◉ No PER Identification _____

MANAGEMENT OBSERVATION CHECKLIST

Name:	Date:	Assessment Location/Job:
James J. Badden	06/07/09	Base Operation /Table Top Drill

AREAS OF FOCUS (SAFETY)

☐ Housekeeping	☐ Adequate Cleaning Schedule Maintained ☐ STOP for Each Other Observations	☐ Orderliness ☐ SEE Safety	☐ Clean ☐ Work Areas Dry and Clean
☐ Communications	☐ Complacent ☐ Actions of People	☐ Fatigue ☐ Mind and Eyes on Task	☐ Position of People ☐ Rushing
☐ Ergonomics	☐ Posture ☐ Work Area Design ☐ Temperature	☐ Types and Number of Motions ☐ Tools and Grips ☐ Lighting	☐ Load Handled ☐ Vibration ☐ Noise
☐ Personal Protective Equipment	☐ Eyes and Face ☐ Hands and Arms	☐ Ears ☐ Feet and Legs	☐ Head ☐ Trunk
☐ Tools and Equipment	☐ Right for Job ☐ Carried or Stored Properly	☐ Used Correctly ☐ Guides in Place (Adequate)	☐ In Safe Condition
☒ Procedure Compliance	☐ Right Revision Used ☐ Not Followed ☐ Missing Step	☐ No Work Package/Procedure ☐ Step Not Performed	☐ Opened But Not Referenced ☐ Missed Hold Point

OBSERVATION TOPIC	Criteria and Requirements	Method of Assessment Against the Requirements	What Was Observed/ Documents Reviewed/ Who Interviewed
☐ Industrial Safety			
☐ Maintenance			
☐ Material Condition			
☐ Configuration Management			
☐ Resource Allocation			
☒ On-Shift Training/Drills	TFC-OPS-EP-CD-02.1	Observation	Observed Table Top Drill for C-Shift
☐ Lockout/Tagout			
☐ Pre-Job Meeting - Form A-6003-288			
☐ RadCon Practices - Form A-6003-290			
☐ Other			

ISMS CORE FUNCTIONS REVIEWED

- ☐ Work Scope Defined
- ☐ Hazards Analyzed
- ☐ Hazard Control Developed and Implemented
- ☐ Work Performed Within the Controls
- ☐ Feedback and Continuous Improvement Provided

TRACKING AND TRENDING

Hours of Observation	.5
Number of Unsafe Acts	0
Number of Errors Observed	0
Number of Incidents Repeated	0
Number of Unsafe Conditions	0

SUMMARY OF RESULTS, COMMENTS, OR OBSERVATIONS (Attach additional pages as necessary):

Observed conduct of table top drill for C-Shift. Drill scenario was an injured worker (heat stroke) in SY Tank Farm. The Senior Shift Manger lead the table top drill talking through actions required per TF-ERP-013, "Emergency Response Procedure 13 Tank Farm Worker Emergency Response".

The Senior Shift Manager (SSM) handed out the ERP to all participants (SM, NCO's, HPT's, IHT's & SOE) for use during the discussion. During the table top discussion the crew talked through the actions required for personnel injury highlighting the importance of getting immediate medical attention as the primary goal with radiological surveys being

MANAGEMENT OBSERVATION CHECKLIST (Continued)

Name:	Date:	Assessment Location/Job:
James J. Badden	06/07/09	Base Operation /Table Top Drill

secondary. One member of the crew pointed out that the procedure has you skip a step but never brings you back to that step. The SSM wrote PER-2009-1151 to identify the issue with the sequencing of the steps.

The SSM conducted the drill in accordance with the guidance provided in TFC-OPS-OP-CD-2.1 "Base Operations/SST Retrieval & Closure Operations Tabletop Drill Program".

Tank Farm Entered? ○ Yes ◉ No

PER ISSUED? ○ Yes ◉ No PER Identification 2009-1151