This document was too large to scan as a single document. It has been divided into smaller sections.

Section 4

Document Information			
Document #	FOIA-2009-0051	Revision	
Title	FREEDOM OF INFORMATION ACT REQUEST (FOI 2009-0051)		
Date	09/09/2009		
Originator	RIEHLE DC	Originator Co.	DOE-RL
Recipient	CARPENTER T	Recipient Co.	HANFORD CHALLENGE
References			
Keywords	OCE, FOIA, SENSITIVE, PRIVATE CITIZEN		
Projects			
Other Information			

MANAGEMENT OBSERVATION CHECKLIST

Name:	Date:	Assessment Location/Job:
James J. Badden	05/10/09	Base Operation /Table Top Drill

AREAS OF FOCUS (SAFETY)

☐ Housekeeping	☐ Adequate Cleaning Schedule Maintained ☐ STOP for Each Other Observations	☐ Orderliness ☐ SEE Safety	☐ Clean ☐ Work Areas Dry and Clean
☐ Communications	☐ Complacent ☐ Actions of People	☐ Fatigue ☐ Mind and Eyes on Task	☐ Position of People ☐ Rushing
☐ Ergonomics	☐ Posture ☐ Work Area Design ☐ Temperature	☐ Types and Number of Motions ☐ Tools and Grips ☐ Lighting	☐ Load Handled ☐ Vibration ☐ Noise
☐ Personal Protective Equipment	☐ Eyes and Face ☐ Hands and Arms	☐ Ears ☐ Feet and Legs	☐ Head ☐ Trunk
☐ Tools and Equipment	☐ Right for Job ☐ Carried or Stored Properly	☐ Used Correctly ☐ Guides in Place (Adequate)	☐ In Safe Condition
☒ Procedure Compliance	☐ Right Revision Used ☒ Not Followed ☐ Missing Step	☐ No Work Package/Procedure ☐ Step Not Performed	☐ Opened But Not Referenced ☐ Missed Hold Point

OBSERVATION TOPIC	Criteria and Requirements	Method of Assessment Against the Requirements	What Was Observed/ Documents Reviewed/ Who Interviewed
☐ Industrial Safety			
☐ Maintenance			
☐ Material Condition			
☐ Configuration Management			
☐ Resource Allocation			
☒ On-Shift Training/Drills	TFC-OPS-EP-CD-02.1	Observation	Observed Table Top Drill for C-Shift
☐ Lockout/Tagout			
☐ Pre-Job Meeting - Form A-6003-288			
☐ RadCon Practices - Form A-6003-290			
☐ Other			

ISMS CORE FUNCTIONS REVIEWED

- ☐ Work Scope Defined
- ☐ Hazards Analyzed
- ☐ Hazard Control Developed and Implemented
- ☐ Work Performed Within the Controls
- ☐ Feedback and Continuous Improvement Provided

TRACKING AND TRENDING

Hours of Observation	.5
Number of Unsafe Acts	0
Number of Errors Observed	1
Number of Incidents Repeated	0
Number of Unsafe Conditions	0

SUMMARY OF RESULTS, COMMENTS, OR OBSERVATIONS (Attach additional pages as necessary):

Observed conduct of table top drill for C-Shift. Drill scenario was a range fire located in east area near AP Tank Farm. The Senior Shift Manger lead the table top drill talking through the actions required per TF-AOP-007, "Response to Hanford Site Range Fire."

Good practice:
The Senior Shift Manager (SSM) handed out a list of ERP's and AOP's to all participants (SM, NCO's, HPT's & SOE) for use during the discussion. He utilized this list to demonstrate that during this type of event they would most likely be starting out in the "Response to Lightning" AOP, which caused the fire, then going into TF-AOP-007 once the

MANAGEMENT OBSERVATION CHECKLIST (Continued)

Name:	Date:	Assessment Location/Job:
James J. Badden	05/10/09	Base Operation /Table Top Drill

fire was discovered. Additionally he discussed potentially needing to enter ARP's as a response to exhauster shutdown due to high filter dp in the event of filter plugging. Curtailment of operations such as putting 242-A into recirculation was discussed along with what would constitute entry into TF-ERP-006. Good discussion by the crew took place during the table top and the fact that the back shift does not have the capability to monitor for air quality was identified. The SSM wrote WRPS-PER-2009-0934 to evaluate air monitoring capability.

Area for Improvement:
The "Response to Hanford Site Range Fire" TF-AOP-007 was not handed out to participants as specified in the guidance section of "Base Operations/SST Retrieval & Closure Operations Tabletop Drill Program" TFC-OPS-EP-CD-02.1. Handing out the procedure will afford the participants a better opportunity to identify potential improvements or issues and enhance drill discussion.

A weekly tickler is utilized to ensure that each shift is performing a monthly table top drill as required by TFC-OPS-EP-CD-02.1. While I was providing feedback on performance of the drill to the SSM, he identified that the tickler as currently written does not reference the tabletop drill procedure. Ticklers are typically driven by a procedure and should reference the controlling document. I would suggest listing TFC-OPS-EP-CD-02.1 as the "Requirement" on the tickler and in the description, state "Perform one table-top drill in accordance with TFC-OPS-EP-CD-02.1 per shift per month".

Tank Farm Entered? ○ Yes ◉ No

PER ISSUED? ◉ Yes ○ No PER Identification 09-934&935

MANAGEMENT OBSERVATION CHECKLIST

Name:	Date:	Assessment Location/Job:
TERRY H. RAHM	4/29/09	MO-511/5a

AREAS OF FOCUS (SAFETY)

☐ Housekeeping	☐ Adequate Cleaning Schedule Maintained ☐ STOP for Each Other Observations	☐ Orderliness ☐ SEE Safety	☐ Clean ☐ Work Areas Dry and Clean
☐ Communications	☐ Complacent ☐ Actions of People	☐ Fatigue ☐ Mind and Eyes on Task	☐ Position of People ☐ Rushing
☐ Ergonomics	☐ Posture ☐ Work Area Design ☐ Temperature	☐ Types and Number of Motions ☐ Tools and Grips ☐ Lighting	☐ Load Handled ☐ Vibration ☐ Noise
☐ Personal Protective Equipment	☐ Eyes and Face ☐ Hands and Arms	☐ Ears ☐ Feet and Legs	☐ Head ☐ Trunk
☐ Tools and Equipment	☐ Right for Job ☐ Carried or Stored Properly	☐ Used Correctly ☐ Guides in Place (Adequate)	☐ In Safe Condition
☐ Procedure Compliance	☐ Right Revision Used ☐ Not Followed ☐ Missing Step	☐ No Work Package/Procedure ☐ Step Not Performed	☐ Opened But Not Referenced ☐ Missed Hold Point

OBSERVATION TOPIC	Criteria and Requirements	Method of Assessment Against the Requirements	What Was Observed/ Documents Reviewed/ Who Interviewed
☐ Industrial Safety			
☐ Maintenance			
☐ Material Condition			
☐ Configuration Management			
☐ Resource Allocation			
☐ On-Shift Training/Drills			
☐ Lockout/Tagout			
☐ Pre-Job Meeting - Form A-6003-288			
☐ RadCon Practices - Form A-6003-290			
☒ Other TABLETOP DRILL	TFC-OPS-EP-C-02, REV-2	OBSERVATION	T-T-D → AP-104 TO AP-101 TRANSFER

ISMS CORE FUNCTIONS REVIEWED

- ☑ Work Scope Defined
- ☑ Hazards Analyzed
- ☐ Hazard Control Developed and Implemented TABLE TOP
- ☑ Work Performed Within the Controls
- ☑ Feedback and Continuous Improvement Provided

TRACKING AND TRENDING

Hours of Observation	2
Number of Unsafe Acts	Ø
Number of Errors Observed	Ø
Number of Incidents Repeated	Ø
Number of Unsafe Conditions	Ø

SUMMARY OF RESULTS, COMMENTS, OR OBSERVATIONS (Attach additional pages as necessary):

THE TABLE TOP ~~OBERS~~ WAS CONDUCTED EXTREMELY WELL BY RICK ANDERSON, SENIOR SHIFT MANAGER, B-SHIFT & WAS ATTENDED BY AN NCO, HPT, INT & TRANSFER OE. AN EXCELLENT UNDERSTANDING & APPLICATION OF CONOPS PRACTICES, SUCH AS THREE-WAY COMMUNICATION & PROCEDURE COMPLIANCE WAS OBSERVED. GOOD TEAMWORK IN THE T-T WAS NOTED. NO DEFICIENCIES WERE IDENTIFIED. THERE WAS SOME DISCUSSION RELATED TO "DEVIATION FORMS" RAD PLANS. NO ACTION WAS IDENTIFIED.

Tank Farm Entered? ○ Yes ● No

PER ISSUED? ○ Yes ● No PER Identification _____

MANAGEMENT OBSERVATION CHECKLIST

Name:	Date:	Assessment Location/Job:
F. A. SCHMORDE	04/05/09	TABLETOP DRILL

AREAS OF FOCUS (SAFETY)

☐ Housekeeping	☐ Adequate Cleaning Schedule Maintained ☐ STOP for Each Other Observations	☐ Orderliness ☐ SEE Safety	☐ Clean ☐ Work Areas Dry and Clean
☐ Communications	☐ Complacent ☐ Actions of People	☐ Fatigue ☐ Mind and Eyes on Task	☐ Position of People ☐ Rushing
☐ Ergonomics	☐ Posture ☐ Work Area Design ☐ Temperature	☐ Types and Number of Motions ☐ Tools and Grips ☐ Lighting	☐ Load Handled ☐ Vibration ☐ Noise
☐ Personal Protective Equipment	☐ Eyes and Face ☐ Hands and Arms	☐ Ears ☐ Feet and Legs	☐ Head ☐ Trunk
☐ Tools and Equipment	☐ Right for Job ☐ Carried or Stored Properly	☐ Used Correctly ☐ Guides in Place (Adequate)	☐ In Safe Condition
☐ Procedure Compliance	☐ Right Revision Used ☐ Not Followed ☐ Missing Step	☐ No Work Package/Procedure ☐ Step Not Performed	☐ Opened But Not Referenced ☐ Missed Hold Point

OBSERVATION TOPIC	Criteria and Requirements	Method of Assessment Against the Requirements	What Was Observed/ Documents Reviewed/ Who Interviewed
☐ Industrial Safety			
☐ Maintenance			
☐ Material Condition			
☐ Configuration Management			
☐ Resource Allocation			
☐ On-Shift Training/Drills			
☐ Lockout/Tagout			
☐ Pre-Job Meeting - Form A-6003-288			
☐ RadCon Practices - Form A-6003-290			
☒ Other	TFC-OPS-EP-CD-02.1	MONITOR AS SSW	CREW D 2SM'S, IHT, 4 NCO'S

ISMS CORE FUNCTIONS REVIEWED

- ☐ Work Scope Defined
- ☐ Hazards Analyzed
- ☐ Hazard Control Developed and Implemented
- ☐ Work Performed Within the Controls
- ☒ Feedback and Continuous Improvement Provided

TRACKING AND TRENDING

Hours of Observation	2
Number of Unsafe Acts	0
Number of Errors Observed	0
Number of Incidents Repeated	0
Number of Unsafe Conditions	0

SUMMARY OF RESULTS, COMMENTS, OR OBSERVATIONS (Attach additional pages as necessary):

Monitored the tabletop drill for TF-AOP-014 "Response to Lightning"

Though this tabletop drill met the limited guidance of TFC-OPS-EP-CD-02.1 "BASE OPERATIONS/ SST RETRIEVAL & CLOSURE OPERATIONS TABLETOP DRILL PROGRAM" I evaluated this activity as LESS THAN ADEQUATE. This activity would have been more accurately characterized as a training lecture. Additionally, TF-AOP-014 by itself is a poor choice for a tabletop as there is almost no actions for those shift personnel other than the Shift Manager, who in this case, was leading this event.

MANAGEMENT OBSERVATION CHECKLIST (Continued)

Name:	Date:	Assessment Location/Job:
F. A. SCHMORDE	04/05/09	TABLETOP DRILL

AOP procedure problem.-- Step 3.1.2 incorrectly directs personnel working outdoors to stop work and "TAKE COVER". Personnel should "TAKE SHELTER" as correctly stated in Table 1, response #3. TAKE COVER requires securing ventilation, etc.

I recommend the following corrective actions to be taken;

1. Flesh-out the Guidance in TFC-OPS-EP-CD-02.1 following elements;
   a. Assign personnel to job assignments and have them respond as they would have responded in the field. (Using three-way communication, finding the correct procedures, describing the alarms and indications they would expect, describing in detail how they would accomplish their actions, etc.
   b. Do not provide copies of the procedures to all until they have found them themselves and it is necessary for the discussion to proceed.
   c. Discussions should be lead by asking only questions whenever possible. It should never be a lecture. (How would you..?, Where would you go..?,Who would you inform?, etc.)
   d. Demand that all persons participate.
   e. Leader should provide initiating conditions and other indications necessary for the team to analyze, taking care that you do not compromise the drill and the ability to evaluate the team's responses.
2. Have Emergency Preparedness conduct these tabletops until our program matures.
3. E.P. provide a tabletop drill schedule with scenarios approved by Operations.

I would be most willing to assist in our program.

F.A. SCHMORDE
308-1670

Tank Farm Entered? ○ Yes ◉ No

PER ISSUED? ○ Yes ◉ No PER Identification N/A

Task# WRPS-PER-2009-0385.7

E-STARS[R] Report
Task Detail Report
08/06/2009 1649

TASK INFORMATION			
Task#	WRPS-PER-2009-0385.7		
Subject	WRPS-PER-2009-0385; SIG; CC-07 Re-emphasize an aggressive Management Observation Program (MOP) to continually perform management oversight and encoura		
Parent Task#	WRPS-PER-2009-0385	**Status**	CLOSED 05/04/2009
Reference	WRPS-PER-2009-0385	**Due**	05/05/2009
Originator	^PER CAs	**Priority**	Medium
Originator Phone		**Category**	PER
Origination Date	04/08/2009 1238	**Generic1**	None
Remote Task#		**Generic2**	None
Deliverable	PER Review	**Generic3**	None
Class	None	**View Permissions**	Global
Instructions	*No Instructions*		

ROUTING LISTS

1	Corrective Action	Inactive
	CC-07 Re-emphasize an aggressive Management Observation Program (MOP) to continually perform management oversight and encourage routine feedback. Focus areas should include Conduct of Operations, Radiological Control Operations, alarm response and table-top drills. Deliverable: Issued memo of expectations to MOP designated personnel. RESPONSIBLE MANAGER: When this corrective action is complete, enter a closure statement in E-STARS and close the E-STARS subtask. Refer to the Problem Evaluation Request procedure TFC-ESHQ-Q-C-C-01, Section 4.4 for closure documentation requirements	
	• Brosee, Neil - Assign - Completed with comments - 04/27/2009 0916 *Instructions:*	
	• Gregory, Rob - Review - Concur with comments - 04/27/2009 0941 *Instructions:*	
	• ^Independent Assessment Review - Review - Withdrawn - 04/16/2009 0751 *Instructions:* Independent Assessor Review	

ATTACHMENTS

Attachments	1. 0900518_09-ESQ-082_WRPS_-_[0903111137].pdf 2. 2009-0385.11 Additional Rosters.pdf 3. Concern 1 - Remedial CA, TFC-CHARTER-42.doc 4. Finding 1 - Remedial CA, Base Operations Shift Instructions 10-17-08.doc 5. Finding 1 - Remedial CA, EIR-2008-024.pdf 6. Finding 3 - Remedial CA, ATS-LO-200-110.doc 7. Finding 3 - Remedial CA, ERP-222S-009.doc 8. Finding 6 - Remedial CA, Course 35E001 ITEM Report.pdf 9. Link to PER 10. RCA/CCA Report.pdf 11. SigPER 2009-0385.11 Support Docs.pdf 12. WRPS-0900641.pdf

Task# WRPS-PER-2009-0385.7

COMMENTS			
Poster	Brosee, Neil (Mata, Beth L) - 04/27/2009 0916		
	Completed		
	Interoffice Memorandum WRPS-0900641, Aggressive Management Observation Program Provides Results, was issued by M. N. Brosee on 4/24/2009. The intent of the memo is to re-emphasize an aggressive Management Observation Program (MOP) to continually perform management oversight and encourage routine feedback. Focus areas identified include Conduct of Operations, Radiological Control Operations, alarm response and table-top drills. This memo was distributed to all Base Operations Managers.		
Poster	Gregory, Rob (Mata, Beth L) - 04/27/2009 0941		
	Concur		
	Reviewed and concur with closure statement and attached evidence. BLM for REG		
Poster	^PER CAs (Steelman, Tracy L (inactive)) - 05/04/2009 0942		
	Steelman, Tracy L -- CLOSED		
	Reviewed and closed. tls 5/4/09		
TASK DUE DATE HISTORY			
Modified	04/08/2009 1238 - ^PER CAs	**New Due Date**	05/05/2009 0000
Modified	04/08/2009 1238 - ^PER CAs	**New Due Date**	03/19/2010 0000
SUB TASK HISTORY			
No Subtasks			

-- end of report --

INTEROFFICE MEMORANDUM

washington river protection solutions

WRPS-0900641

Date: April, 24, 2009

To: Base Operations Managers

From: M. N. Brosee, Manager
Base Operations

Subject: AGGRESSIVE MANAGEMENT OBSERVATION PROGRAM PROVIDES RESULTS

References 1.Interoffice Memorandum, B. L. Mata, WRPS, to Distribution, WRPS, "Base Operations MOP Assessment Report for December, January, and February, Fiscal Year 2009, WRPS-0900517, dated April 19, 2009.

2. TFC-ESHQ-AP-C-03, REV A-17, "Management Observation Program," effective date January 20, 2009.

A fundamental attribute in "continuous improvement" is feedback through observations and communications with the workers. Being self-critical of our performance is an active demonstration of the organizational safety culture and achieving Integrated Safety Management Systems (ISMS) Core Function 5, *Identification of Safety Standards and Requirements.*

The Management Observation Program (MOP) is a powerful tool to assess individual knowledge and compliance with the approved policies and procedures as well as their basis to identify and rapidly correct unsafe conditions/behaviors, and promote two-way communication between management and the workforce. These observations provide managers a unique opportunity to understand their respective organizational influence on the actual conduct of field operations, maintenance, radiological control, industrial hygiene, and construction activities as well as how their performance and support might be improved.

The MOP Assessments provide direct management oversight at the activity level and measurement of the overall improvement of the organization.

Managers and supervisors are responsible to develop employees and improve overall performance; which includes Safety and Quality in concert with Schedule and Cost. Management oversight and routine feedback are critical ingredients in achieving this success.

Recent events indicate some specific areas that demand our attention. These focus areas include:

- Conduct of Operations
- Radiological Control Operations
- Alarm Response
- Table-Top drills
- Work Control Progress
    - Job Hazards Analysis

  - Pre-Job Briefings
  - Work Package/Procedure Instructions
- Environmental Monitoring
- Electrical Safety and Lockout/Tagout

During the recent "Expectations" Sessions, I presented my view of the following attributes to achieve Disciplined Operations:

- Personal Accountability
- Technical Inquisitiveness
- Procedure Compliance
- Willingness to Stop

The next step is to apply these principles to the above focus areas. It is my expectation that direct reports will perform one MOP per week. Other managers within Base Operations are expected to perform one MOP per month. Completed MOPs should be of high quality, legible, and signed/dated as appropriate.

The more aggressive we are in evaluating our performance, the sooner our results in "sustained" improvements will be achieved.

cc:	M. A. Lindholm	S7-83
	S. M. Sax	H6-63
	B. L. Mata	S5-23

Task# WRPS-PER-2009-0385.8

E-STARS[R] Report
Task Detail Report
08/06/2009 1650

TASK INFORMATION			
Task#	WRPS-PER-2009-0385.8		
Subject	WRPS-PER-2009-0385; SIG; CATPR-01-01 Ensure shift managers are briefed on revised ARPs, AOPs, and ERPs in conjunction with CC-01. Deliverable: C		
Parent Task#	WRPS-PER-2009-0385	**Status**	CLOSED 07/01/2009
Reference	WRPS-PER-2009-0385	**Due**	07/11/2009
Originator	^PER CAs	**Priority**	Medium
Originator Phone		**Category**	PER
Origination Date	04/08/2009 1238	**Generic1**	None
Remote Task#		**Generic2**	None
Deliverable	PER Review	**Generic3**	None
Class	None	**View Permissions**	Global
Instructions	*No Instructions*		

ROUTING LISTS

1	Corrective Action	Inactive
	CATPR-01-01 Ensure shift managers are briefed on revised ARPs, AOPs, and ERPs in conjunction with CC-01. Deliverable: Copy of briefing material and course completion rosters. RESPONSIBLE MANAGER: When this corrective action is complete, enter a closure statement in E-STARS and close the E-STARS subtask. Refer to the Problem Evaluation Request procedure TFC-ESHQ-Q-C-C-01, Section 4.4 for closure documentation requirements	
	• Owen, Peter - Assign - Reassigned - 05/20/2009 1135 *Instructions:*	
	• Reynolds, Tammy R - Assign - Completed with comments - 06/29/2009 1401 *Instructions:*	
	• Gregory, Rob - Review - Concur with comments - 06/29/2009 1425 *Instructions:*	
	• ^Independent Assessment Review - Review - Withdrawn - 04/16/2009 0751 *Instructions:* Independent Assessor Review	

ATTACHMENTS

Attachments	1. 0900518_09-ESQ-082_WRPS_-_[0903111137].pdf 2. 2009-0385.11 Additional Rosters.pdf 3. Concern 1 - Remedial CA, TFC-CHARTER-42.doc 4. Finding 1 - Remedial CA, Base Operations Shift Instructions 10-17-08.doc 5. Finding 1 - Remedial CA, EIR-2008-024.pdf 6. Finding 3 - Remedial CA, ATS-LO-200-110.doc 7. Finding 3 - Remedial CA, ERP-222S-009.doc 8. Finding 6 - Remedial CA, Course 35E001 ITEM Report.pdf 9. Link to PER 10. PER-2009-0385.8.pdf

Task# WRPS-PER-2009-0385.8

	11. RCA/CCA Report.pdf 12. SigPER 2009-0385.11 Support Docs.pdf		
COMMENTS			
Poster	Reynolds, Tammy R (Collins, Tami L) - 06/29/2009 1401		
	Completed		
	The material attached was used to brief shift managers on the revised ARPs, AOPs and ERPs.		
Poster	Gregory, Rob - 06/29/2009 1425		
	Concur		
	I concur based on the review of the briefing material (ARP, AOPs and ERP) and course completion rosters.		
Poster	^PER CAs (Steelman, Tracy L (inactive)) - 07/01/2009 0849		
	Steelman, Tracy L -- CLOSED		
	Reviewed and closed. tls 7/1/09		
TASK DUE DATE HISTORY			
Modified	04/08/2009 1238 - ^PER CAs	**New Due Date**	07/11/2009 0000
Modified	04/08/2009 1238 - ^PER CAs	**New Due Date**	03/19/2010 0000
SUB TASK HISTORY			
No Subtasks			

-- end of report --

COURSE COMPLETION ROSTER

Course No.	Course Title	Date Completed
	SIG PER 2009-0385 (ARP/AOP/ERP CORRECTIVE ACTION)	
Session No. *Records Use Only*	**Location**	**Beginning Date/Time**

NOTE: IN ORDER TO OBTAIN CREDIT FOR CLASS, FILL OUT FORM ACCURATELY:
1. PRINT NAME IN FORMAT LAST, FIRST, MI (UNLESS NAME IS ALREADY PROVIDED).
2. SIGN NAME IN PERMANENT INK AND PROVIDE REQUESTED INFORMATION.
3. IF YOU DO NOT HAVE A HID OR PAYROLL NUMBER, CONTACT YOUR INSTRUCTOR TO COMPLETE A TRAINING COMPLETION RECORD, FORM A-6001-539.

Billing Info
- ☐ BILLABLE CLASS
- ☐ NON-BILLABLE CLASS

	Hanford ID (HID) or Person ID	Print Name (Last, First, MI)	Signature	Company	CACN (Charge Code)	Billing Code *See Billing Codes Be
1	H0076461	TREADWAY, D	D. Treadway	WRPS		
2	H0099486	WALLGREN CARL B	[illegible]	"		
3	H0078933	Andrews, Jeffrey E	[illegible]	WRPS		
4	H0078950	Higham, [illegible]	[illegible]	"		
5	H0003531	Johnson, Brian A	[illegible]	" "		
6	H0019PG	Harrison, Dale	[illegible]	"		
7						
8						
9						
10						
11						
12						
13						
14						
15						
16						

Instructor's Name (Printed/Signature)	Date/MSIN	Authenticator's Name (Printed/Signature)	Date/MSIN

COMMENTS:

UNUSED BLOCKS ON COMPLETED FORM NEED NOT BE MARKED N/A OR LINED OUT.

*BILLING CODES: (CB) Complete Bill, (CN) Complete No-Bill, (FB) Fail Bill, (IB) Incomplete Bill, (IN) Incomplete No-Bill, (NB) No Show Bill, (XX) Cancel. IF BLANK, WILL DEFAULT TO COMPLETE BILL (CB).

DISTRIBUTION: ORIGINAL TO TRAINING RECORDS, G6-60

OFFICIAL USE ONLY

A-6001-541 (RE

COURSE COMPLETION ROSTER

			Records Use Only
e No.	Course Title SIG PER 2009-0385 (ARP/AOP/ERP CORRECTIVE ACTION)	Date Completed	
n No. *ds Use Only*	Location	Beginning Date/Time	

'E: IN ORDER TO OBTAIN CREDIT FOR CLASS, FILL OUT FORM ACCURATELY:
1. PRINT NAME IN FORMAT LAST, FIRST, MI (UNLESS NAME IS ALREADY PROVIDED).
2. SIGN NAME IN PERMANENT INK AND PROVIDE REQUESTED INFORMATION.
3. IF YOU DO NOT HAVE A HID OR PAYROLL NUMBER, CONTACT YOUR INSTRUCTOR TO COMPLETE A TRAINING COMPLETION RECORD, FORM A-6001-539.

Billing Info
☐ BILLABLE CLASS
☐ NON-BILLABLE CLASS

Hanford ID (HID) or Person ID	Print Name (Last, First, MI)	Signature	Company	CACN (Charge Code)	Billing Code *See Billing Codes Below*
0013282	ANDERSON RICK A				
40075556	Strasser, David W		WRPS		
1100 4692	MALHAN, RAKESH		WRPS		
0099480	WALLGREN CARL				

:tor's Name (Printed/Signature)	Date/MSIN	Authenticator's Name (Printed/Signature)	Date/MSIN

IENTS:

ED BLOCKS ON COMPLETED FORM NEED NOT BE MARKED N/A OR LINED OUT.

NG CODES: (CB) Complete Bill, (CN) Complete No-Bill, (FB) Fail Bill, (IB) Incomplete Bill, (IN) Incomplete No-Bill, (NB) No Show Bill, (XX) Cancel. IF BLANK, WILL DEFAULT TO COMPLETE BILL

IBUTION: ORIGINAL TO TRAINING RECORDS, G6-60

OFFICIAL USE ONLY

A-6001-541 (REV 2)

Shift Managers,

Ensure that you have reviewed and understand the changes to the attached ARP's, AOP's and ERP's. This is to close out SIG PER 2009-0385. This PER evaluated WRPS Response to Abnormal Events. The surveillance team found emergency response and Conduct of Operations deficiencies in which the Base Operations and 222-S Laboratory management team did not implement approved Abnormal Response Procedures and processes following indications of abnormal operating conditions.

Document your review of these changes on an attendance roster. This needs to be completed by COB 6/30/2009

If you have any questions contact Bill Parnell at 438-9615.

Corrective Action CC-01 for WRPS-PER-2009-0385.1 is to complete a review of Double-Shell Tank Pressurization related Alarm Response Procedures (ARPs), Abnormal Operating Procedures (AOPs), and Emergency Response Procedures (ERPs). Revise as necessary to ensure consistency in response actions and level of controls.

The following Alarm Response Procedures (ARPs) have been revised to include directions to enter TF-AOP-021 (Abnormal Operating Procedure) for loss of tank ventilation:

ARP Number	ARP Title
AN Farm	
ARP-T-221-00101	Respond to Panel 101 Alarms at 271-AN
ARP-T-221-00102	Respond to Panel 102 Alarms at 271-AN
ARP-T-221-00103	Respond to Panel 103 Alarms at 271-AN
ARP-T-221-00104	Respond to Panel 104 Alarms at 271-AN
ARP-T-221-00105	Respond to Panel 105 Alarms at 271-AN
ARP-T-221-00106	Respond to Panel 106 Alarms at 271-AN
ARP-T-221-00107	Respond to Panel 107 Alarms at 271-AN
ARP-T-221-EXH(A)	Respond to A-Train Alarms at 241-AN VTP Exhaust Skid
ARP-T-221-EXH(B)	Respond to B-Train Alarms at 241-AN VTP Exhaust Skid
AW Farm	
ARP-T-231-00101	Respond to Panel ANN-101 Alarms at 271-AW
ARP-T-231-00102	Respond to Panel ANN-102 Alarms at 271-AW
ARP-T-231-00103	Respond to Panel ANN-103 Alarms at 271-AW
ARP-T-231-00104	Respond to Panel ANN-104 Alarms at 271-AW
ARP-T-231-00105	Respond to Panel ANN-105 Alarms at 271-AW
ARP-T-231-00106	Respond to Panel ANN-106 Alarms at 271-AW
ARP-T-231-EXH(A)	Respond to A-Train Alarms at 241-AW VTP Exhaust Skid
ARP-T-231-EXH(B)	Respond to B-Train Alarms at 241-AW VTP Exhaust Skid
AY/AZ Farms	
ARP-T-251-00015	Respond to Monitor Control System Graphic #15 Primary Vent Alarms
ARP-T-251-00017	Respond to Monitor Control System Graphic #17 Primary Exhaust Alarms
ARP-T-251-00018	Respond to Monitor Control System Graphic #18 Primary Vent Stack Alarms
AP Farm	
ARP-T-271-00101	Respond to Panel 101 Alarms at 271-AP
ARP-T-271-00102	Respond to Panel 102 Alarms at 271-AP
ARP-T-271-00103	Respond to Panel 103 Alarms at 271-AP
ARP-T-271-00104	Respond to Panel 104 Alarms at 271-AP
ARP-T-271-00105	Respond to Panel 105 Alarms at 271-AP
ARP-T-271-00106	Respond to Panel 106 Alarms at 271-AP
ARP-T-271-00107	Respond to Panel 107 Alarms at 271-AP
ARP-T-271-00108	Respond to Panel 108 Alarms at 271-AP
ARP-T-271-HVAC	Respond to Panel HVAC Alarms at 271-AP

ARP Number	ARP Title
ARP-T-271-RM	Respond to Panel Radiation Monitor Alarms at 271-AP
SY Farm	
ARP-T-431-00003	Respond to Alarms at SY-241 A-Train Primary Exhauster
ARP-T-431-00004	Respond to Alarms at 241-SY B-Train Primary Exhauster
ARP-T-431-00101	Respond to Alarms in the 241-SY-271 Instrument Building (being routed for approval at this time – 5/13/09)

The following Abnormal Operating Procedures (AOPs) were reviewed to ensure consistency and identify any contradictions. The procedures appeared to be consistent and no contradictions were found. TF-AOP-003, "Response to Elevated Airborne Radioactivity", is in the process of being cancelled as the actions required by this AOP are covered in TF-AOP-021 and applicable work package instructions.

AOP Number	AOP Title
TF-AOP-011	Response to Chemical and/or Radiological Events
TF-AOP-015	Response to Reported Odors or Unexpected Changes to Vapor Conditions
TF-AOP-020	Response for Placing Personnel and Equipment in a Safe Condition
TF-AOP-021	Response to Tank Farm Ventilation Upset

The following Emergency Response Procedures (ERPs) were reviewed to ensure consistency and identify any contradictions. The procedures appeared to be consistent and no contradictions were found.

ERP Number	ERP Title
TF-ERP-001	Emergency Response Procedure 001 Take Cover / Personnel Accountability / and Area Evacuation
TF-ERP-005	Emergency Response Procedure 005 Radioactive Release
TF-ERP-013	Emergency Response Procedure 013 Tank Farm Worker Emergency Response

Task# WRPS-PER-2009-0385.9

E-STARS[R] Report
Task Detail Report
08/06/2009 1651

TASK INFORMATION			
Task#	WRPS-PER-2009-0385.9		
Subject	WRPS-PER-2009-0385; SIG; CATPR-01-02 Ensure shift managers are briefed on the importance of 3-way communication including complete directions, repeat		
Parent Task#	WRPS-PER-2009-0385	**Status**	CLOSED 06/25/2009
Reference	WRPS-PER-2009-0385	**Due**	06/04/2009
Originator	^PER CAs	**Priority**	Medium
Originator Phone		**Category**	PER
Origination Date	04/08/2009 1238	**Generic1**	None
Remote Task#		**Generic2**	None
Deliverable	PER Review	**Generic3**	None
Class	None	**View Permissions**	Global
Instructions	*No Instructions*		

ROUTING LISTS		
1	Corrective Action	Inactive
	CATPR-01-02 Ensure shift managers are briefed on the importance of 3-way communication including complete directions, repeat back, and acknowledgement. Deliverable: Copy of briefing material and course completion rosters. RESPONSIBLE MANAGER: When this corrective action is complete, enter a closure statement in E-STARS and close the E-STARS subtask. Refer to the Problem Evaluation Request procedure TFC-ESHQ-Q-C-C-01, Section 4.4 for closure documentation requirements	
	• Owen, Peter - Assign - Reassigned - 05/20/2009 1135 *Instructions:*	
	• Reynolds, Tammy R - Assign - Completed with comments - 06/18/2009 0829 *Instructions:*	
	• Gregory, Rob - Review - Concur with comments - 06/18/2009 0958 *Instructions:*	
	• ^Independent Assessment Review - Review - Withdrawn - 04/16/2009 0752 *Instructions:* Independent Assessor Review	

ATTACHMENTS	
Attachments	1. 0900518_09-ESQ-082_WRPS_-_[0903111137].pdf 2. 2009-0385.11 Additional Rosters.pdf 3. commroster.pdf 4. comroster.pdf 5. Concern 1 - Remedial CA, TFC-CHARTER-42.doc 6. Finding 1 - Remedial CA, Base Operations Shift Instructions 10-17-08.doc 7. Finding 1 - Remedial CA, EIR-2008-024.pdf 8. Finding 3 - Remedial CA, ATS-LO-200-110.doc 9. Finding 3 - Remedial CA, ERP-222S-009.doc 10. Finding 6 - Remedial CA, Course 35E001 ITEM Report.pdf

Task# WRPS-PER-2009-0385.9

	11. Link to PER 12. RCA/CCA Report.pdf 13. SigPER 2009-0385.11 Support Docs.pdf 14. SM 3-Way Comm Briefing		
COMMENTS			
Poster	Reynolds, Tammy R - 06/18/2009 0829		
	Completed		
	Action #9 has been completed. Attached is the briefing on 3-way communications and copies of the Shift Instructions with the Shift Manager initials indicating they have completed the actions.		
Poster	Gregory, Rob (Mata, Beth L) - 06/18/2009 0958		
	Concur		
	Reviewed and concur with closure statement and associated closure evidence. BLM for REG		
Poster	^PER CAs (Steelman, Tracy L (inactive)) - 06/25/2009 1030		
	Steelman, Tracy L -- CLOSED		
	Reviewed and closed. tls 6/25/09		
TASK DUE DATE HISTORY			
Modified	04/08/2009 1238 - ^PER CAs	**New Due Date**	06/04/2009 0000
Modified	04/08/2009 1238 - ^PER CAs	**New Due Date**	03/19/2010 0000
SUB TASK HISTORY			
No Subtasks			

-- end of report --

May 22, 2009

BASE OPERATIONS SHIFT INSTRUCTIONS
Reviewed: T_____ A_____ B_____ C_____ D_____

PLANNED ACTIVITIES (Notify Shift Operations Manager of any activities that cannot be completed)

SHIFT OPERATIONS:

- The 242-A SM is responsible for TO-230-225, "Evaporator Campaign Monitoring for 241-AW to 241-AP Transfer and Jetting Evaporator Pump Room Sump." The 242-A SM will ensure all aspects are managed effectively including pre-requisites, MBD and data sheet monitoring, and that associated Rad Control & IH Monitoring Plans are implemented.

DST:

• AY101/AY102 Corrosion Probe Readings		Sat/Sun/Mon	Days
• Inst Tech Shopwork		Sat/Sun/Mon	Days
• 801-AY Electrical Outage Work	-	Sunday	Days

SST:

• C-103/C-106 HIHTL Removal Preps	-	Monday	Days

242A:

• Continue 242-A campaign	Sat/Sun/Mon	D/S/G

ACTIONS: (Senior Shift Manager's initial on Action Items indicates completion for assigned personnel)

1. SSMs/SMs complete required reading presentation covering three way communication and sign associated roster.
   T___✓___ A_____ D_____
2. Review: Tailgate 05/18/2009 with your Crew
   D_____

INFORMATION:

1. (05/21/09) At the first opportunity (lack of waste disturbing activities), swap the AP VTP from the B-Train to the A-Train due to elevated dose rate on the B-Train HEPA filter. 5/27/09
2. (04/29/09) As a reminder to all personnel performing Tank Farm perimeter checks as part of their rounds, in addition to ensuring personnel and vehicle access gates are locked, they are to challenge the effectiveness of the locking mechanism to ensure the access cannot be inadvertently opened. If the locking mechanism is ineffective, notify the shift manager and take necessary actions to correct the issue.
3. (04/16/09) On backshifts and weekends, periodically (at least once per shift) drive by S-Farm and C-Farm to see if any abnormal conditions exist. If a portable exhauster red strobe on POR-03 (C-Farm) or POR-05 (S-Farm) is active, respond per TF-AOP-021. Notify Retrieval OE's (Curt Reichmuth, Dave Carlile, Clyde Allen) if red strobes are active on POR-03. Notify Dave Saueressig (day or night) if either white or red strobe is active on POR-05.

Dale B. Higham, Base Operations Senior Shift Manager

May 20, 2009

BASE OPERATIONS SHIFT INSTRUCTIONS

Reviewed: T /18 **A**____ **B** [illegible] **C** [illegible] **D**____

PLANNED ACTIVITIES (Notify Shift Operations Manager of any activities that cannot be completed)

SHIFT OPERATIONS:

- The 242-A SM is responsible for TO-230-225, "Evaporator Campaign Monitoring for 241-AW to 241-AP Transfer and Jetting Evaporator Pump Room Sump." The 242-A SM will ensure all aspects are managed effectively including pre-requisites, MBD and data sheet monitoring, and that associated Rad Control & IH Monitoring Plans are implemented.

DST:

- AW-106 UT inspection - Swing
- 702-AZ (296-A-43) Inlet Filter Test - Swing

SST:

- HPT routines - Swing

242A:

- Continue 242-A campaign.

ACTIONS: (Senior Shift Manager's initial on Action Items indicates completion for assigned personnel)

1. SSMs/SMs complete required reading presentation covering three way communication and sign associated roster.
   T [illegible] A____ C [illegible] D____
2. Review: Tailgate 05/18/2009 with your Crew
   T DS D____

INFORMATION:

1 (4/29/09) As a reminder to all personnel performing Tank Farm perimeter checks as part of their rounds, in addition to ensuring personnel and vehicle access gates are locked, they are to challenge the effectiveness of the locking mechanism to ensure the access cannot be inadvertently opened. If the locking mechanism is ineffective, notify the shift manager and take necessary actions to correct the issue.

2. (04/16/09) On backshifts and weekends, periodically (at least once per shift) drive by S-Farm and C-Farm to see if any abnormal conditions exist. If a portable exhauster red strobe on POR-03 (C-Farm) or POR-05 (S-Farm) is active, respond per TF-AOP-021. Notify Retrieval OE's (Curt Reichmuth, Dave Carlile, Clyde Allen) if red strobes are active on POR-03. Notify Dave Saueressig (day or night) if either white or red strobe is active on POR-05.

Brian A. Johnson, Base Operations Senior Shift Manager

May 19, 2009

BASE OPERATIONS SHIFT INSTRUCTIONS

Reviewed: T____ A____ B____ C____ D____

PLANNED ACTIVITIES (Notify Shift Operations Manager of any activities that cannot be completed)

SHIFT OPERATIONS:

- Remove Admin Locks ETF-42 and ETF-150 (physical disconnection of motive force in place) in AY Farm to support AY outage work
- The 242-A SM is responsible for TO-230-225, "Evaporator Campaign Monitoring for 241-AW to 241-AP Transfer and Jetting Evaporator Pump Room Sump." The 242-A SM will ensure all aspects are managed effectively including pre-requisites, MBD and data sheet monitoring, and that associated Rad Control & IH Monitoring Plans are implemented.

DST:

- Caustic Hose Pressure Test - Swing
- 801-AY Electrical Outage Work - Swing

SST:

- None

242A:

- Continue 242-A campaign.

ACTIONS: (Senior Shift Manager's initial on Action Items indicates completion for assigned personnel)

1. SSMs/SMs complete required reading presentation covering three way communication and sign associated roster.
   T____ A____ B____ C____ D____
2. Review: Tailgate 05/18/2009 with your Crew
   T____ B____ D____

INFORMATION:

1. (4/29/09) As a reminder to all personnel performing Tank Farm perimeter checks as part of their rounds, in addition to ensuring personnel and vehicle access gates are locked, they are to challenge the effectiveness of the locking mechanism to ensure the access cannot be inadvertently opened. If the locking mechanism is ineffective, notify the shift manager and take necessary actions to correct the issue.
2. (04/16/09) On backshifts and weekends, periodically (at least once per shift) drive by S-Farm and C-Farm to see if any abnormal conditions exist. If a portable exhauster red strobe on POR-03 (C-Farm) or POR-05 (S-Farm) is active, respond per TF-AOP-021. Notify Retrieval OE's (Curt Reichmuth, Dave Carlile, Clyde Allen) if red strobes are active on POR-03. Notify Dave Saueressig (day or night) if either white or red strobe is active on POR-05.

Brian A. Johnson, Base Operations Senior Shift Manager

TFC - ACTIVITY COMPLETION ROSTER

TFC RECORDS USE ONLY

Activity Number:	Activity Title:	Date Completed:
N/A	Shift Manager Briefing on 3-Way Communications (Corrective Action WRPS-PER-2009-0385.9)	
Dept. ID if Applicable:	**Location:**	**Date Entered Into ATS:**
TEJ10000	MO-286	N/A

NOTE: IN ORDER TO OBTAIN CREDIT FOR THIS ACTIVITY, FILL OUT THE FORM ACCURATELY:
1. Print Name in format LAST, FIRST, MI (unless name is already provided). Illegible name/HID will not be processed for completion.
2. Sign Name in INK and provide requested information.

	Hanford ID (HID) or Payroll Number	Print Name (Last, First, MI)	Signature	Company	Job Position (e.g., Manager, NCO, Technical Specialist, Construction Electrician)
1	H0013282	Anderson, Rick A		WRPS	Senior Shift Manager
2	H0078933	Andrews, Jeffrey E		WRPS	Senior Shift Manager
3	H0008224	Garrett, Mark S		WRPS	Shift Manager
4	H0001919	Harrison, Dale		WRPS	Shift Manager
5	H0078950	Higham, Dale B		WRPS	Shift Manager
6	H0003531	Johnson, Brian A		WRPS	Senior Shift Manager
7	H0046812	Malhan, Rakesh		WRPS	Shift Manager
8	H0075556	Strasser, Dave W		WRPS	Senior Shift Manager
9	H0076461	Treadway, Phil L		WRPS	Shift Manager
10	H0099480	Wallgren, Carl B		WRPS	Senior Shift Manager
11					
12					
13					
14					
15					
16					
17					

Activity Point of Contact (Printed/Signature):	Authenticator's Name (Printed/Signature):	Date/MSIN:
Pete Owen Tammy R Reynolds	Pete Owen Tammy R Reynolds	6/19/09

INSTRUCTIONS/COMMENTS:

DISTRIBUTION: ORIGINAL TO TFC TRAINING RECORDS, S7-95.

A-6003-948 (02/05)

washington river protection solutions

Shift Manager Briefing on Three-Way Communications

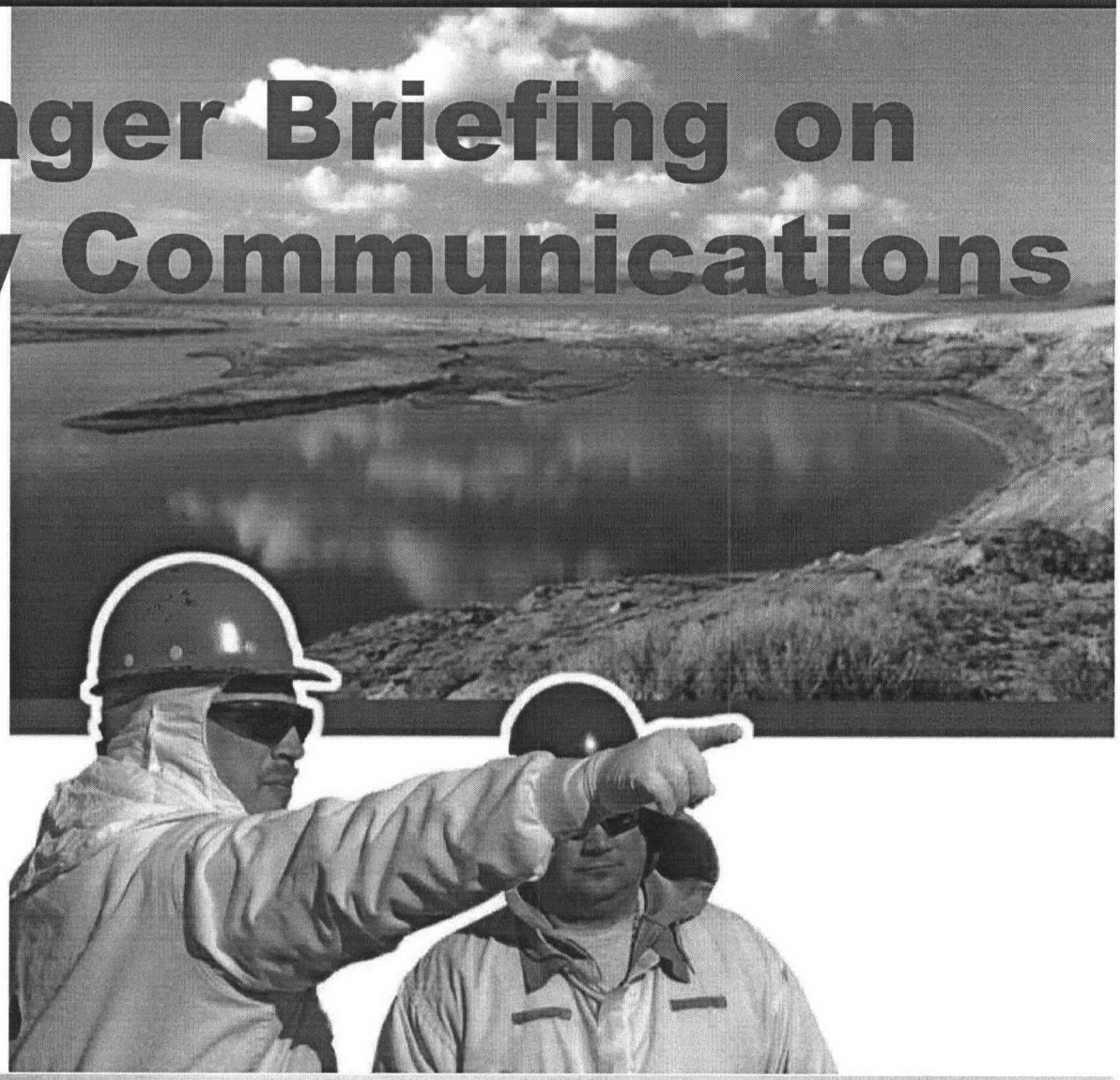

- TFC-OPS-OPER-CD-45

Pete Owen

May 19, 2009

washington river protection solutions

Shift Manager Briefing on Three-Way Communications

- TFC-OPS-OPER-CD-45 is the Conduct of Operations Implementation Guide
  - Communications is discussed in Attachment D
  - This attachment corresponds to Chapter 4 of DOE 5480.19.
  - This attachment establishes TOC guidelines for facilities, activities, and operations for highly effective, reliable, and accurate transmission of information.

washington river protection solutions

Shift Manager Briefing on Three-Way Communications

- Policy - Accurate communications are essential for the safe and efficient operation of TOC facilities.
- Examples of specific communication system(s) and methods of communication include the use of:
  - Emergency communication systems
  - Public address systems
  - Three-way communications (i.e., directions, repeat back, acknowledge)
  - Standard terminology
  - Radios
  - A phonetic alphabet.

washington river protection solutions

Shift Manager Briefing on Three-Way Communications

- **Communication (Three-Way Communication)**
  - It is essential for both the sender and the receiver to be certain a message is understood when conducting operations and providing plant status. Simply stated, three-way communications is:
    - The sender initiates the message
    - The receiver acknowledges the message
    - The sender confirms the accuracy of the message heard by the receiver.
  - Three-Way communication is expected for conveying plant status, configuration changes, conducting operations and providing direction such as:
    - Communicating emergency directions
    - Communicating operating instructions such as startup and shutdown of equipment
    - Reporting process parameters such as temperature, level, flow, and material balance discrepancy.

Shift Manager Briefing on Three-Way Communications

- **Communication (Three-Way Communication)**
  - Three-Way communication is also an effective human error reduction method for other work activities such as providing and acknowledging work direction and communicating during peer checking. See the independent verification section for STAR and peer checking expectations.
  - Examples of three-way communication are listed in the TOC communications guidelines administrative procedure (TFC-OPS-OPER-C-31).

washington river protection solutions

Shift Manager Briefing on Three-Way Communications

- Questions? Contact:
  - Dale Harrison (Conduct of Operations Chapter Champion – Communications)
  - Pete Owen (Shift Operations Manager)

Task# WRPS-PER-2009-0385.10

E-STARS[R] Report
Task Detail Report
08/06/2009 1653

TASK INFORMATION			
Task#	WRPS-PER-2009-0385.10		
Subject	WRPS-PER-2009-0385; SIG; CATPR-02-01 Review and update TFC-ESHQ-RP_MON-P-09, "Grab Air Sampling," to include immediate actions and notification to th		
Parent Task#	WRPS-PER-2009-0385	**Status**	CLOSED 05/05/2009
Reference	WRPS-PER-2009-0385	**Due**	05/05/2009
Originator	^PER CAs	**Priority**	Medium
Originator Phone		**Category**	PER
Origination Date	04/08/2009 1238	**Generic1**	None
Remote Task#		**Generic2**	None
Deliverable	PER Review	**Generic3**	None
Class	None	**View Permissions**	Global
Instructions	*No Instructions*		

ROUTING LISTS

1	Corrective Action	Inactive
	CATPR-02-01 Review and update TFC-ESHQ-RP_MON-P-09, "Grab Air Sampling," to include immediate actions and notification to the Shift Office of preliminary analysis identifying high airborne contamination levels. Deliverable: Copy of revised procedure. RESPONSIBLE MANAGER: When this corrective action is complete, enter a closure statement in E-STARS and close the E-STARS subtask. Refer to the Problem Evaluation Request procedure TFC-ESHQ-Q-C-C-01, Section 4.4 for closure documentation requirements	
	• Rolph, Jim T - Assign - Completed with comments - 04/29/2009 1643 *Instructions:* ↳ *Routing List:* Route List - Inactive *Instructions:* Make the recommended changes to the referenced procedure. • Le, Tuyet M - Assign - Completed with comments - 04/23/2009 0744	
	• Gregory, Rob - Review - Concur with comments - 05/05/2009 0940 *Instructions:*	
	• ^Independent Assessment Review - Review - Withdrawn - 04/16/2009 0746 *Instructions:* Independent Assessor Review	

ATTACHMENTS

Attachments	1. 0900518_09-ESQ-082_WRPS_-_[0903111137].pdf 2. 2009-0385.11 Additional Rosters.pdf 3. Concern 1 - Remedial CA, TFC-CHARTER-42.doc 4. Finding 1 - Remedial CA, Base Operations Shift Instructions 10-17-08.doc 5. Finding 1 - Remedial CA, EIR-2008-024.pdf 6. Finding 3 - Remedial CA, ATS-LO-200-110.doc 7. Finding 3 - Remedial CA, ERP-222S-009.doc

Task# WRPS-PER-2009-0385.10

	8. Finding 6 - Remedial CA, Course 35E001 ITEM Report.pdf 9. Link to PER 10. RCA/CCA Report.pdf 11. SigPER 2009-0385.11 Support Docs.pdf 12. Revised Grab Air Sampling Procedure

COMMENTS

Poster	Le, Tuyet M - 04/23/2009 0743
	Updated Grab Air Sampling procedure is attached.
Poster	Le, Tuyet M - 04/23/2009 0744
	Completed
	Procedure update completed.
Poster	Rolph, Jim T - 04/29/2009 1643
	Completed
	Task Completed
Poster	Gregory, Rob (Mata, Beth L) - 05/05/2009 0940
	Concur
	Reviewed and concur with attached procedure revision of TFC-ESHQ-RP_MON-P-09, "Grab Air Sampling." This action is complete. BLM for REG
Poster	^PER CAs (Steelman, Tracy L (inactive)) - 05/05/2009 1420
	Steelman, Tracy L -- CLOSED
	Verified intended procedure revisions with Beth Mata. OK to close. tls 5/5/09

TASK DUE DATE HISTORY

Modified	04/08/2009 1238 - ^PER CAs	**New Due Date**	05/05/2009 0000
Modified	04/08/2009 1238 - ^PER CAs	**New Due Date**	03/19/2010 0000

SUB TASK HISTORY

No Subtasks

-- end of report --

Ownership matrix

TABLE OF CONTENTS

1.0 PURPOSE AND SCOPE 2
2.0 IMPLEMENTATION 2
3.0 RESPONSIBILITIES 2
4.0 PROCEDURE 2
4.1 General Guidance 2
4.2 Sampling with the Staplex High Volume Air Sampler and Annular Kinetic Impactor (AKI) 6
5.0 DEFINITIONS 9
6.0 RECORDS 9
7.0 SOURCES 9
7.1 Requirements 9
7.2 References 10

TABLE OF FIGURES

Figure 1. Grab Air Sampling. 11
Figure 2. STAPLEX®3 High Volume Air Sampler and AKI. 12
Figure 3. Example of Air Sample Envelope Label. 13
Figure 4. AKI Dimensions. 14

TABLE OF ATTACHMENTS

ATTACHMENT A – CALCULATION OF PRELIMINARY ASSESSMENT RESULTS 15

1.0 PURPOSE AND SCOPE

This procedure provides general guidance to the health physics technician (HPT) regarding the collection of radiological grab air samples during work activities. This procedure provides specific guidance on sampling with the Staplex High Volume Air Sampler and Annular Kinetic Impactor (AKI).

Grab air sampling is the use of portable air samplers to evaluate airborne radioactivity concentrations associated with specific jobs or processes (i.e., document conditions, document changes in conditions), verify the effectiveness of engineering controls, verify the effectiveness of respiratory protection devices, and down-post airborne radioactivity areas (ARA). Requirements for air monitoring may also be contained in facility specific workplace air monitoring technical basis documents. (7.1.1.a, 7.1.1.b, 7.1.1.c, 7.1.1.d, 7.1.1.e, 7.1.1.f, 7.1.1.g, 7.1.1.h, 7.1.1.i)

The Notice of Construction air sample may be used as the grab air sample, provided the air sampler position requirements of Section 4.1, step 5, and the objective of the air sampling requirement of the associated Radiation Work Permit (RWP) or technical work document are met.

2.0 IMPLEMENTATION

This procedure is effective on the date shown in the header.

3.0 RESPONSIBILITIES

Responsibilities are contained within Section 4.0.

4.0 PROCEDURE

See Figure 1 and Figure 2 for process flowcharts.

4.1 General Guidance

Filter media information:

- The approved grab sampling filter media are the Versapor-3000, Versapor-3000T, and Fluoropore Membrane Filters (FSLW04700)

- For grab samples with the potential to be analyzed with alpha spectroscopy, the Fluoropore Membrane Filter (FSLW04700) is the preferred collection media. This filter should be used for all grab sampling applications unless otherwise specified in a work document or by a radiological control first line supervisor. Air sampling that is intended to collect thoron daughters Pb-212 and Bi-212 should use a Fluoropore filter.

- When sampling with an annular kinetic impactor (AKI), the approved collection media consists of a stainless steel planchet, nominally 2 inches x 3/32 inch, with one drop of Staplex SF200 coating fluid evenly applied across the planchet collection surface.

Radiological Control

1. Identify the need for work place air sampling during the work planning process and reflect the required sampling in the RWP or technical work document, as necessary.

Health Physics Technician

2. Select grab air sampling equipment to match task length, purpose of sample, and desired sample volume such that minimum detectable concentration (MDC) requirements are supported.

   - Nominally, a 250 ft^3 to 400 ft^3 sample volume is sufficient to meet MDC concerns.
   - To down post an ARA established for thoron daughter control, air samples should be collected with both an AKI/High volume air sampler and a Fluoropore filter. Recommended volume for both samples is 300 ft^3.
   - The Tank Operations Contractor Radiological Control Air Sample Analysis Record (A-6003-351) can be used to approximate the minimum sample time needed to achieve the desired sample volume.

     NOTE: For the Versapor-3000T or the Fluoropore Membrane Filter (FSLW04700), the smooth side is the collection side.

3. Make an easily identified mark (e.g., initials, "X," etc.) on the edge of the collection side of the filter media.

4. Consider pre-loading a sampling head with the appropriate air filter before entering the work area.

5. Position the air sampler to achieve the air sampling goal.

   NOTE: This procedure uses the terms "worker location" and "general area" interchangeably. When the text of this procedure specifies "worker location," it is intended that the sampler be placed as close as possible to the worker without interfering with work activities, becoming a hazard, or coming into contact with workers.

   a. For a job-specific air sample that will be used to establish air activity concentrations in the work area, place the air sampler at the worker's location.

   b. When a job-specific air sample is used to verify the effectiveness of respiratory protection devices, place the air sampler at the worker's location as close to the breathing zone as reasonably possible.

   c. For downposting an ARA, the air sampler is typically placed in the general work area so that the position approximates the worker's location (i.e., such a sample is typically obtained toward the end of a job where workers may or may not be present).

   NOTE: An additional air sample may be collected from the exhaust stream to verify HEPA filter integrity.

d. For verifying the effectiveness of engineering controls such as ventilation, vacuum cleaners, or containment devices, place the air sampler as close to the potential release point as possible and in a downstream direction (e.g., sampler is placed downstream of a glove bag).

e. Take into account the air flow pattern or directionality of the wind in the final positioning of the air sampler.

6. Install the air sample filter and reset the elapsed time meter, if applicable.

   a. For the Versapor-3000T or the Fluoropore Membrane Filter (FSLW04700), install with the smooth side out (smooth side is the collection side).

7. Turn on the air sampler pump.

   NOTE: Flow rate adjustment may precede the actual start of the job.

8. Adjust the flow rate within the calibrated range to achieve the desired volume in the time available, as necessary.

9. Complete the pre-sample portions of the air sample envelope label (see Figure 3):

   - Facility (e.g., AW Farm)
   - Specific location of sampler (e.g., south side of 241-AW-103-03A pit)
   - RWP number
   - Work package number
   - Specify protection factor (PF) of respiratory protection worn
   - Sampler serial number
   - Specify (i.e., circle one) whether the sample is from the breathing zone or from the general area
   - Check the box that most closely represents the type of sample (e.g., verify respirator protection)
   - Date and time sampler started/on
   - Initial flow rate of sampler
   - Name of individual starting sampler
   - Job description (e.g., pull cover blocks from 03A pit).

10. After collecting the desired air sample volume, note the sampler's flow rate and date/time just prior to turning off the sampler pump.

11. Turn off the air sampler pump.

12. Complete the post-sample portions of the air sample envelope label:

    - Date and time sampler turned off
    - Name of individual turning sampler off

- Ending/final flow rate
- Radiological Survey Report number
- Check the box for the appropriate ARA status.

13. Remove the air filter or sampling head from the air sampler pump.

NOTE: When background levels of radon and thoron daughters interfere with evaluation of alpha air samples, prompt field assessment may not be possible.

Health Physics Technician/RadCon First Line Supervisor

14. Perform a preliminary assessment of the air sample using field survey techniques.

15. Calculate preliminary assessment results using the formula located in Attachment A.

Health Physics Technician

a. Notify the radiological control first line supervisor of any preliminary assessment results that exceed any environmental notification criteria or other action levels.

RadCon First Line Supervisor

b. Verify the area is controlled and provide immediate actions and notification to the Shift Office of preliminary analysis identifying high airborne contamination levels.

Health Physics Technician/RadCon First Line Supervisor

16. When the results of a preliminary assessment are required in the performance of work (e.g., environmental notifications), document the preliminary assessment in accordance with TFC-ESHQ-RP_ADM-P-09. (7.1.1.c)

NOTE: RadCon first line manager notifies Environmental On-Call in accordance with Environmental notification criteria contained in the Work Space Air Samples section of TFC-ESHQ-ENV_FS-C-01.

Health Physics Technician

17. Place the air filter into an appropriate container (i.e., petri dish, planchet, or equivalent container) to ensure sample integrity is maintained while stored in an envelope.

18. Place the air filter container into the air sample envelope.

19. Transport the air filter as radioactive material to the appropriate counting facility for analysis.

a. If alpha spectroscopy is to be used to obtain an expedited analysis (e.g., downposting of an ARA, concerns for a high activity filter), transport the sample to a facility capable of performing alpha spectroscopy within about twenty minutes of sample collection.

b. If it is suspected that thoron daughters may be present in the work place, then transport the sample to a facility capable of determining the gross beta concentration within about one hour of sample collection. (7.1.2)

NOTE: The inventory of many waste tanks includes thorium-232 (Th-232). Th-232 ultimately decays to the thoron daughters, Pb-212 and Bi-212. These radionuclides are a result of DOE operations.

4.2 Sampling with the Staplex High Volume Air Sampler and Annular Kinetic Impactor (AKI)

The following precautions and limitations should be observed when sampling with the AKI/High Volume Air Sampler:

- Hearing protection is recommended for personnel in the vicinity of an operating Staplex air sampler.
- The Staplex air sampler should not be operated in an explosive atmosphere or in the presence of explosive or flammable vapors, dust or fumes.
- According to the Material Safety Data Sheet, safety glasses, as a minimum, are required to be worn when applying Staplex SF200 Coating Fluid (silicone oil) to planchets. In addition, wash hands after handling the oil.
- Oil should be applied to the planchet outside of contamination areas to avoid potential cross-contamination.
- Avoid using absorbent material, such as cotton swabs or paper towels, and do not introduce foreign substances such as powder from a latex glove when spreading oil on a planchet.
- Excessive application of oil (i.e., greater than one drop) may result in significant self-absorption of alpha particles.
- High temperature cutting operations, such as plasma torches and electric arc cutting, can generate particle sizes that are not efficiently collected on an oiled planchet.
- Air sampling that is intended to collect thoron daughters Pb-212 and Bi-212 should be performed with a Fluoropore filter since they are not efficiently collected on an oiled planchet.
- To minimize the potential for the spread of contamination, direct the sampler exhaust away from contaminated areas to the extent practicable.

Health Physics Technician

1. Verify that the calibration date of the AKI/High Volume Air Sampler is current.

   NOTE: The Staplex pump and AKI head are calibrated as a matched set, and two calibration labels are produced for the set at the time of calibration. Terminology, such as "use with" or "matched set," will appear on the label.

2. Inspect the sampler for obvious damage and malfunctioning components.

   NOTE: There are dimensions maintained during calibration (see Figure 4) on the AKI. While one cannot truly verify the dimensions by visual inspection, be cognizant that rough handling (e.g., tripod falls over and AKI head hits concrete or metal structure) can adversely alter the dimensions and impact collection efficiency.

3. If the sampler appears to be damaged or malfunctioning, complete and attach a Tag-Instrument Service (BT-6002-880) to the sampler and obtain another sampler.

4. Apply one drop of Staplex SF200 Coating Fluid to the planchet.

5. Spread the oil evenly across the planchet collection surface using a bare or gloved finger tip, being careful not to introduce foreign material.

6. Adjust the height and position of the sampler using a tripod or other device to ensure the desired air space is sampled and to minimize the spread of contamination via the sampler exhaust.

   NOTE: The planchet will fall off the AKI if it is not held in place until the sampler is turned on.

7. Place the oil coated side of the planchet over the front opening of the AKI.

8. Turn the air sampler power to the ON position.

9. Verify the flow rate is less than 55 cfm.

10. Verify the initial flow rate on the sampler rotometer is within +/- 10 percent of the "as left" flow rate on the AKI head.

    NOTE: The AKI "as left" flow rate is printed on the AKI calibration label as "Flow = XX CFM." "As left" flow rates typically fall between 30 to 50 cfm.

11. If the rotameter reading is unacceptable, complete and attach a Tag-Instrument Service (BT-6002-880) to the sampler and obtain another sampler.

12. Complete the pre-sample portions of the air sample envelope label (see Figure 3):

    - Facility (e.g., AW Farm)
    - Specific location of sampler (e.g., south side of 241-AW-103-03A pit)
    - RWP number
    - Work package number
    - Specify protection factor (PF) of respiratory protection worn

- Sampler serial number
- Specify (i.e., circle one) whether the sample is from the breathing zone or from the general area
- Check the box that most closely represents the type of sample (e.g., verify respirator protection)
- Date and time sampler started/on
- Initial flow rate of sampler
- Name of individual starting sampler
- Job description (e.g., pull cover blocks from 03A pit).

13. Run the sampler for up to 20 minutes per sample for the task/job.

    NOTE: The AKI/High Volume Air Sampler should only be run for up to 20 minutes per sample due to particle loading considerations. If a longer sample collection time is needed, exchange the sample.

14. Before turning off the sample pump, note the flow rate.

    NOTE: The planchet will fall off the AKI when the sample pump is turned off, if it is not held in place.

15. Grasp the planchet, turn the air sampler power to the OFF position, and avoid sliding the planchet across the front opening of the AKI as you remove it.

    NOTE: When background levels of radon and thoron daughters interfere with evaluation of alpha air samples, prompt field assessment may not be possible.

Health Physics Technician/RadCon First Line Supervisor

16. Perform a preliminary assessment of the air sample using field survey techniques.

17. Calculate preliminary assessment results using the formula located in Attachment A.

Health Physics Technician

a. Notify the radiological control first line supervisor of any preliminary assessment results that exceed any environmental notification criteria or other action levels.

RadCon First Line Supervisor

b. Verify the area is controlled and provide immediate actions and notification to the Shift Office of preliminary analysis identifying high airborne contamination levels.

Health Physics Technician/RadCon First Line Supervisor

18. When the results of a preliminary assessment are required in the performance of work (e.g., environmental notifications), document the preliminary assessment in accordance with TFC-ESHQ-RP_ADM-P-09. (7.1.1.c)

    NOTE: RadCon first line manager notifies Environmental On-Call in accordance with Environmental notification criteria contained in the Work Space Air Samples section of TFC-ESHQ-ENV_FS-C-01.

Health Physics Technician

19. Place the AKI planchet, oiled side up, into any type of holder (typically a cardboard carrier) that maintains the integrity of the sample.

20. Complete the post-sample portions of the air sample envelope label:

    - Date and time sampler turned off
    - Name of individual turning sampler off
    - Ending/final flow rate
    - Radiological Survey Report number
    - Check the box for the appropriate ARA status.

21. Place the planchet holder into the air sample envelope.

22. Transport the air filter as radioactive material to the appropriate counting facility for analysis.

    a. If alpha spectroscopy is to be used to obtain an expedited analysis (e.g., downposting of an ARA, concerns for a high activity filter), transport the sample to a facility capable of performing alpha spectroscopy within about twenty minutes of sample collection.

5.0 DEFINITIONS

Derived air concentration. The airborne concentration that equals the annual limit of intake (ALI) divided by the volume of air breathed by an average worker for a working year of 2000 hours (assuming a breathing volume of 2400 m^3).

Preliminary assessment. As pertains to air samples, a preliminary assessment is a field evaluation of an air sample, performed promptly upon completion of sample collection. The preliminary assessment is followed by a count room analysis of the sample, and the count room analysis is used to establish the record air activity concentration.

Representative of breathing zone. Results from lapel samplers or other samplers that are located within about 1 foot of the worker's head may be accepted as representative of the breathing zone (NUREG-1400).

6.0 RECORDS

No records are generated in the performance of this procedure.

7.0 SOURCES

7.1 Requirements

1. HNF-MP-5184, "CH2M HILL Hanford Group Inc., Radiation Protection Program."
    a. Requirement #91, 835.403(a)(1).
    b. Requirement #92, 835.403(a)(2).
    c. Requirement #64, 835.209(a).
    d. Requirement #66, 835.401(a)(1).
    e. Requirement #67, 835.401(a)(2).

f. Requirement #68, 835.401(a)(3).
g. Requirement #69, 835.401(a)(4).
h. Requirement #70, 835.401(a)(5).
i. Requirement #71, 835.401(a)(6).

2. TFC-0606-FACT-0061, "Thoron Working Level Calculation and Issues Associated with Thoron and Its Daughters."

7.2 References

1. DOE, 2007, *Radiation Protection Programs Guide*, DOE G 441.1-1B, Chapter 10

2. HNF-5183, "Tank Farms Radiological Control Manual (TFRCM)."

3. NUREG-1400, "Air Sampling in the Workplace."

4. TFC-0504-FCDMP-0018, "Workplace Air Monitoring Standards."

5. TFC-ESHQ-ENV_FS-C-01, "Environmental Notification."

6. TFC-ESHQ-RP_ADM-P-09, "Documentation of Radiological Surveys."

7. TPP-RC-WMP-02-001, "Correction Factors for Use with the Staplex Annular Kinetic Impactor and High Volume Air Sampler."

Figure 1. Grab Air Sampling.

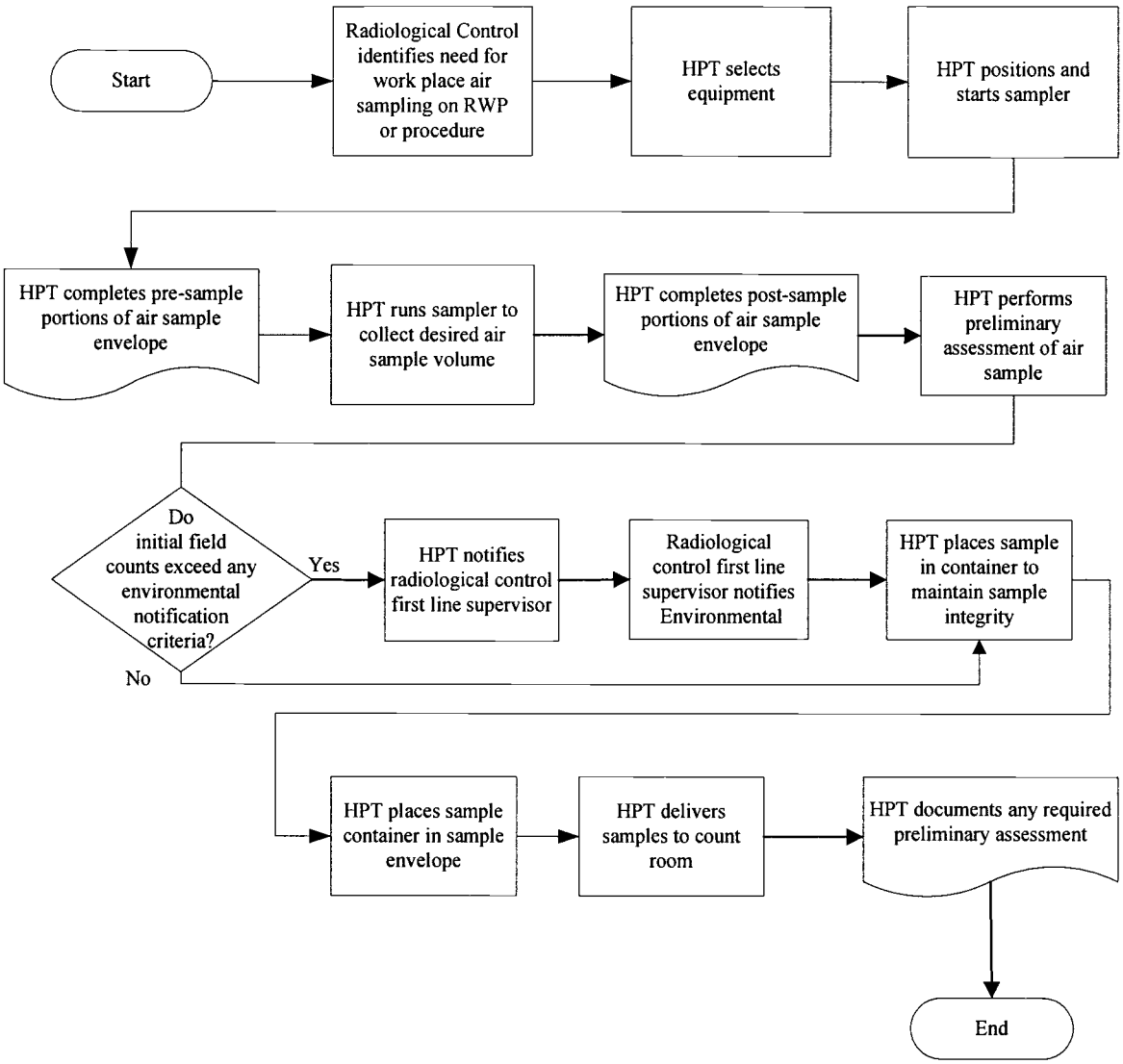

Key:

HPT: Health Physics Technician
RWP: Radiation Work Permit

Figure 2. STAPLEX^{D_3} High Volume Air Sampler and AKI.

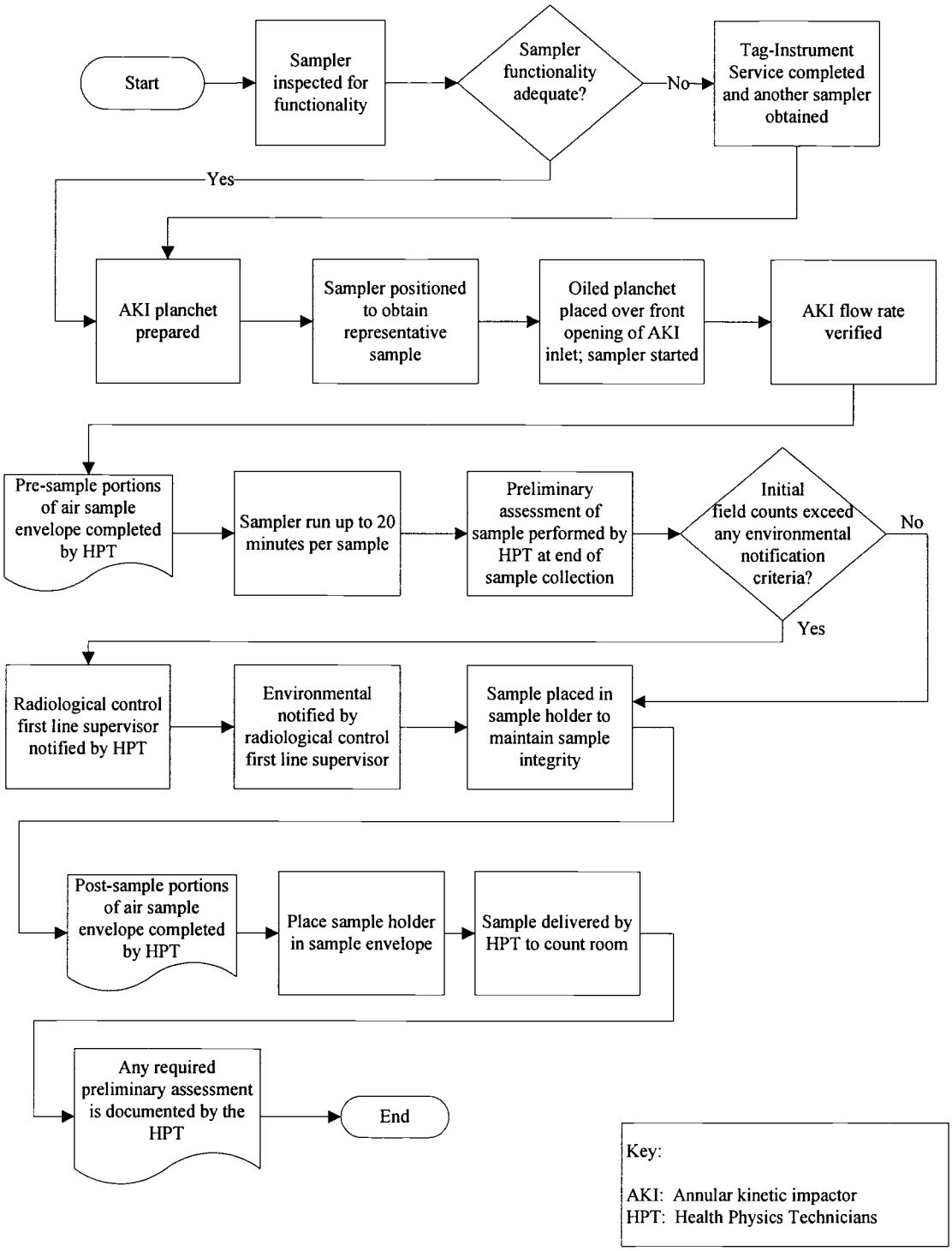

Figure 3. Example of Air Sample Envelope Label.

Count Room Log #	Facility	RSR #	
Location		Area Posted ARA? Yes ☐ No ☐	
RWP	PF	Circle One Breathing Zone / General Area	
Work Package		Job-Specific CAM ☐ Job-Specific Grab Air ☐ Verify Respiratory Protection ☐ Verify Engineering Controls ☐ Downposting ARA ☐ Lapel: ☐ Payroll # _____	
Sampler Serial #			
On: Date	Time	Flow	Name
Off: Date	Time	Flow	Name
Job Description			

NOTE 1: This procedure uses the term "general area" and "worker location" interchangeably.

NOTE 2: Count room log number only pertains to those facilities that have instituted such a log.

Figure 4. AKI Dimensions.

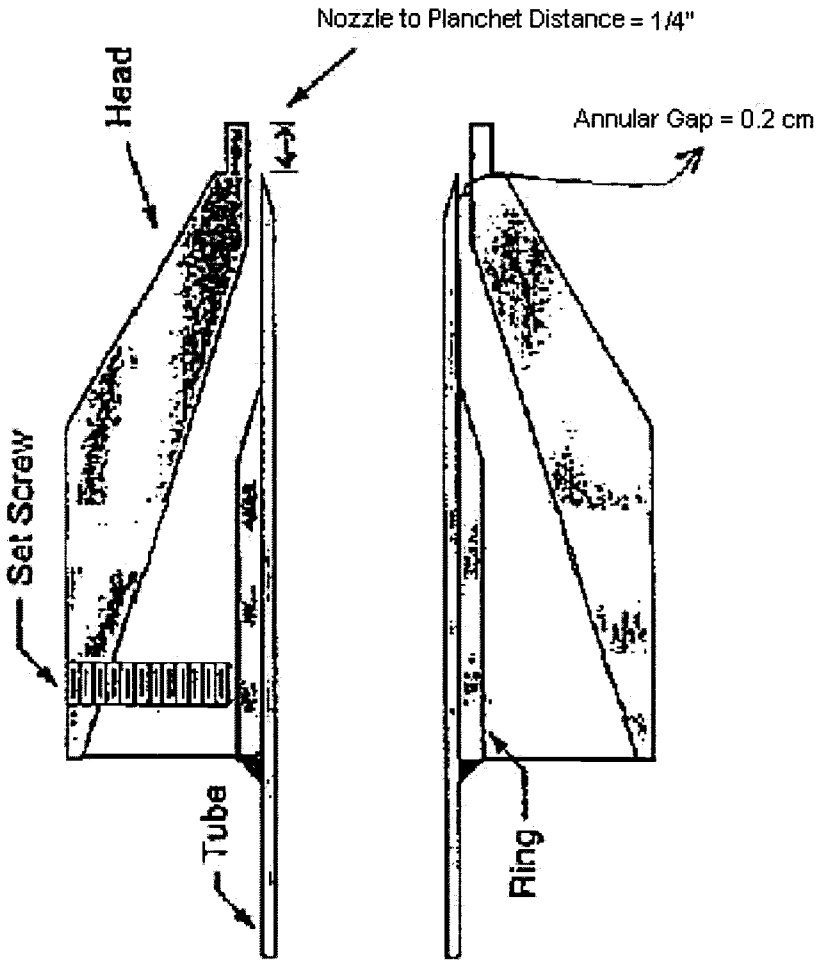

ATTACHMENT A – CALCULATION OF PRELIMINARY ASSESSMENT RESULTS

NOTE: For calculating DAC fractions, utilize the Sr-90 DAC value of 8 E-9 μCi/ml and the Pu-239 DAC value of 2 E-12 μCi/ml for gross beta and alpha activity, respectively. 222-S Laboratories may use the more restrictive Sr-90 DAC value of 2E-09 μCi/ml, based on the chemical form of strontium that may be handled at the facility.

$$\text{Activity } (\mu\text{Ci/ml}) = \frac{N \times K}{V \times E_c \times E_a \times E_f}$$

Where:

N = Net count rate in cpm (gross cpm – background cpm)

K = 1.6 E-11 conversion factor

V = Sample volume in cubic feet (flow rate multiplied by sample time)

E_c = Instrument efficiency (%/100). For the PAM, use actual efficiency identified on the calibration sticker. For the GM portable survey meter, use the actual efficiency on the calibration sticker for Cs-137 unless otherwise directed by a work document or radiological control first line supervisor.

E_a = Self Absorption factor (%/100), for oil coated AKI planchet = 0.82 for alpha activity and 1.0 for beta activity. Factor does not apply to other sample media.

E_f = Collection Efficiency (%/100) for oil coated AKI planchet = 0.78. For all other sample media use 1.0.

Task# WRPS-PER-2009-0385.11

E-STARS[R] Report
Task Detail Report
08/06/2009 1653

TASK INFORMATION			
Task#	WRPS-PER-2009-0385.11		
Subject	WRPS-PER-2009-0385; SIG; DC-02-01 Provide briefing to HPTs and Radiological Control FLMs on this event and procedural changes made in action CATPR-02-		
Parent Task#	WRPS-PER-2009-0385	**Status**	CLOSED 06/01/2009
Reference	WRPS-PER-2009-0385	**Due**	06/10/2009
Originator	^PER CAs	**Priority**	Medium
Originator Phone		**Category**	PER
Origination Date	04/08/2009 1238	**Generic1**	None
Remote Task#		**Generic2**	None
Deliverable	PER Review	**Generic3**	None
Class	None	**View Permissions**	Global
Instructions	*No Instructions*		

ROUTING LISTS

1	Corrective Action	Inactive
	DC-02-01 Provide briefing to HPTs and Radiological Control FLMs on this event and procedural changes made in action CATPR-02-01. Deliverable: Copy of briefing material and course completion roster. RESPONSIBLE MANAGER: When this corrective action is complete, enter a closure statement in E-STARS and close the E-STARS subtask. Refer to the Problem Evaluation Request procedure TFC-ESHQ-Q-C-C-01, Section 4.4 for closure documentation requirements	
	• Brannan, Patrick (Brad) - Assign - Completed with comments - 05/28/2009 1157 *Instructions:*	
	• Gregory, Rob - Review - Concur with comments - 06/01/2009 0813 *Instructions:*	
	• ^Independent Assessment Review - Review - Withdrawn - 04/16/2009 0752 *Instructions:* Independent Assessor Review	

ATTACHMENTS

Attachments

1. 0900518_09-ESQ-082_WRPS_-_[0903111137].pdf
2. 2009-0385.11 Additional Rosters.pdf
3. Concern 1 - Remedial CA, TFC-CHARTER-42.doc
4. Finding 1 - Remedial CA, Base Operations Shift Instructions 10-17-08.doc
5. Finding 1 - Remedial CA, EIR-2008-024.pdf
6. Finding 3 - Remedial CA, ATS-LO-200-110.doc
7. Finding 3 - Remedial CA, ERP-222S-009.doc
8. Finding 6 - Remedial CA, Course 35E001 ITEM Report.pdf
9. Link to PER
10. RCA/CCA Report.pdf
11. SigPER 2009-0385.11 Support Docs.pdf

COMMENTS

Task# WRPS-PER-2009-0385.11			
Poster	Brannan, Patrick (Brad) (Bickel, Eric E) - 05/28/2009 1157		
	Completed		
	A briefing was prepared and presented to Base Ops East/West and 222-S available personnel. Non-available personnel (i.e., STD and PTB) were contacted by email to complete the required briefing prior to returning to work. See attachment for documentation of briefing content and documentation of briefing completion. This action should be closed.		
Poster	Gregory, Rob (Mata, Beth L) - 06/01/2009 0813		
	Concur		
	Reviewed closure evidence and concur with closure. BLM for REG		
Poster	^PER CAs (Steelman, Tracy L (inactive)) - 06/01/2009 1105		
	Steelman, Tracy L -- CLOSED		
	Reviewed and closed. tls 6/1/09		
TASK DUE DATE HISTORY			
Modified	04/08/2009 1238 - ^PER CAs	**New Due Date**	06/10/2009 0000
Modified	04/08/2009 1238 - ^PER CAs	**New Due Date**	03/19/2010 0000
SUB TASK HISTORY			
No Subtasks			

-- end of report --

Task# WRPS-PER-2009-0385.12

E-STARS[R] Report
Task Detail Report
08/06/2009 1654

TASK INFORMATION			
Task#	WRPS-PER-2009-0385.12		
Subject	WRPS-PER-2009-0385; SIG; CATPR-03-01 Revise ERP-222S-009 to clarify the entrance criteria for spills, releases, and CAM alarms. Deliverable: Ap		
Parent Task#	WRPS-PER-2009-0385	**Status**	CLOSED 05/11/2009
Reference	WRPS-PER-2009-0385	**Due**	05/11/2009
Originator	^PER CAs	**Priority**	Medium
Originator Phone		**Category**	PER
Origination Date	04/08/2009 1238	**Generic1**	None
Remote Task#		**Generic2**	None
Deliverable	PER Review	**Generic3**	None
Class	None	**View Permissions**	Global
Instructions	*No Instructions*		

ROUTING LISTS

1	Corrective Action	Inactive
	CATPR-03-01 Revise ERP-222S-009 to clarify the entrance criteria for spills, releases, and CAM alarms. Deliverable: Approved procedure. RESPONSIBLE MANAGER: When this corrective action is complete, enter a closure statement in E-STARS and close the E-STARS subtask. Refer to the Problem Evaluation Request procedure TFC-ESHQ-Q-C-C-01, Section 4.4 for closure documentation requirements	
	• Hardy, Don B - Assign - Completed with comments - 04/28/2009 0928 *Instructions:*	
	• Gregory, Rob - Review - Concur with comments - 05/08/2009 1130 *Instructions:*	
	• ^Independent Assessment Review - Review - Withdrawn - 04/16/2009 0752 *Instructions:* Independent Assessor Review	

ATTACHMENTS

Attachments	1. 0900518_09-ESQ-082_WRPS_-_[0903111137].pdf 2. 2009-0385.11 Additional Rosters.pdf 3. Concern 1 - Remedial CA, TFC-CHARTER-42.doc 4. e-mail DBH.msg 5. ERP-222-S-009.doc 6. Finding 1 - Remedial CA, Base Operations Shift Instructions 10-17-08.doc 7. Finding 1 - Remedial CA, EIR-2008-024.pdf 8. Finding 3 - Remedial CA, ATS-LO-200-110.doc 9. Finding 3 - Remedial CA, ERP-222S-009.doc 10. Finding 6 - Remedial CA, Course 35E001 ITEM Report.pdf 11. Link to PER 12. RCA/CCA Report.pdf 13. SigPER 2009-0385.11 Support Docs.pdf

Task# WRPS-PER-2009-0385.12

COMMENTS	
Poster	Hardy, Don B - 04/28/2009 0928
	Completed
	Complete. Revised ERP-222S-009 to clarify initiating conditions. Issued 4/22/09. dbh 4/28/09
Poster	Gregory, Rob (Mata, Beth L) - 05/08/2009 1130
	Concur
	Reviewed and concur with revision to ERP-222-S-009, Section 1.0, Initiating Conditions. Revision is satisfactory to clarify entrance criteria. Additionally, revision to this procedure was discussed and approved by Mr. R. Jansons of ORP.
Poster	^PER CAs (Steelman, Tracy L (inactive)) - 05/11/2009 0758
	Steelman, Tracy L -- CLOSED
	Reviewed and closed. tls 5/11/09

TASK DUE DATE HISTORY			
Modified	04/08/2009 1238 - ^PER CAs	**New Due Date**	05/11/2009 0000
Modified	04/08/2009 1238 - ^PER CAs	**New Due Date**	03/19/2010 0000

SUB TASK HISTORY

No Subtasks

-- end of report --

Message

From: Hardy, Don B
Sent: Friday, May 08, 2009 11:12 AM
To: Mata, Beth L
Cc: Gregory, Robert E (Rob)
Subject: RE: SigPER Action Concurrence: WRPS-PER-2009-0385.12

Beth,

Revision K-0 of ERP-222S-009 contains the specific verbiage (highlighted below), that when coupled with the release of LO-200-110, "Response to Contamination Detected Inside Laboratory Radiological Control Areas" addresses the issue identified by DOE.

Prior to the revision of ERP-222S-009 one could make argument (DOE's concern) that any time radiological contamination was identified inside the CA area (a fairly common occurrence) of 222S Laboratory, Emergency Response Procedure ERP-222S-009 should be invoked. That was never the intent of the ERP, rather the intent was to initiate ERP-222S-009 upon a significant spill event (hazardous and/or radiological) that required activation of the facilities Facility Emergency Response Organization (FERO). A scenario could be ---- "discovery of a ruptured mixed waste drum outside the facility that occurred during loading/unloading."

To clarify and address DOE issue, we modified the ERP's initiating condition (see highlighted section that limits the radiological initiating condition to radiological releases indentified outside of a posted radiological area) and developed a new procedure LO-200-110, "Response to Contamination Detected Inside Laboratory Radiological Control Areas." This new procedure specifically identifies pre-planned actions for responding to contamination identified inside the posted CA area of 222S Laboratory.

Both procedures revisions have been reviewed with Rick Janson (DOE) who identified the issue in the assessment that led to the SIG-PER. He and I both agree the revisions satisfactorily address the DOE issue originally identified relative to 222S Laboratory.

Pls let me know if you need anything further clarification.

Thanks,
Don

1.0 INITIATING CONDITIONS

A spill of hazardous/radiological material occurs, or a release of radiological contamination occurs outside of the posted radiological area.

From: Mata, Beth L
Sent: Thursday, May 07, 2009 9:28 AM

To: Hardy, Don B
Cc: Gregory, Robert E (Rob)
Subject: SigPER Action Concurrence: WRPS-PER-2009-0385.12
Importance: High

Don –

Per the voicemail I left you earlier, I am trying to concur/close the following ESTAR action on behalf of Rob Gregory. The corrective action as written was to clarify entrance criteria for spills, releases, and CAM alarms. However, when I review the revised procedure, it only addresses spills and releases. Earlier revision to ERP-222S-009 (J-0) removes reference to CAM alarms. Without additional information, it appears that the procedure revision does not fulfill the intent of the corrective action. Please provide a justification of how entrance criteria for CAM alarms is incorporated or why entrance criteria for CAM alarms is not required.

Task#	WRPS-PER-2009-0385.12
Subject	WRPS-PER-2009-0385; SIG; CATPR-03-01 Revise ERP-222S-009 to clarify the entrance criteria for spills, releases, and CAM alarms. Deliverable: Ap

Corrective Action: CATPR-03-01 Revise ERP-222S-009 to clarify the entrance criteria for spills, releases, and CAM alarms.

Revised entrance criteria:

1.0 INITIATING CONDITIONS

A spill of hazardous/radiological material occurs, or a release of radiological contamination occurs outside of the posted radiological area.

Earlier procedure revision:

J-0	NA	03/10/2009	All	Remove continuous air monitor alarm verbiage; new title

Thanks,
Beth Mata

Approval Designator: EP, S, R, T, J
Procedure Use Level: **REFERENCE**
Technical Authority: RE Allen

CONTENTS

1.0 INITIATING CONDITIONS 3

2.0 IMMEDIATE ACTIONS 3

3.0 FOLLOW-UP ACTIONS 3

4.0 RECORDS 5

TABLE

Appendix A. Actions for Spill/Release that Occurs Outside the Facility 6

Revision Status

Change Level	Date	Change Document	Pages	Description
A-0	8/28/2000	DCF 00-32	All	New procedure.
B-0	4/03/2001	DCF 01-24	1,5,6,8,&9	Changes to Sections: 2.2.9, 2.3.10, 2.4.7g, 2.6.6; editorial changes; changed from Continuous to Reference.
C-0	6/27/01	DCF 01-56	All	Complete Rewrite.
D-0	03/11/03	DCF	All	Complete rewrite.
D-1	11/10/03	N/A	All	Remove designator "USQ" from the procedure number. Replace reference HNF-PRO-060, Reporting Occurrences and Processing Operations Information, with TFC-OPS-OPER-C-24, Occurrence Reporting and Processing of Operations Information. This reference change was needed due to recent transition of the 222-S Laboratory to CH2M HILL. Add review designator "E" to the procedure. Added step 3.1.16.
D-2	11/03/2004	N/A	4, 5	Add records verbiage.
E-0	11/02/2005	N/A	All	Periodic review; update review designators and records verbiage
F-0	10/31/2006	NA	3	Periodic review; replace ECO with Environmental

Change Level	Released for Training Date	Released for Use Date	Pages	Description
G-0	NA	11/01/2007	All	Periodic review; add "J" designation and Table 1; clarify Appendix A
H-0	NA	03/13/2008	4	Add 9-1-1 verbiage
I-0	NA	12/09/2008	All	Periodic review; update to reflect TFC-MD-061 required changes
J-0	NA	03/10/2009	All	Remove continuous air monitor alarm verbiage; new title
K-0	NA	04/22/2009	All	Revise to clarify Initiating Conditions; change RCT to HPT

All trademarks and registered trademarks are the property of their respective owners.

1.0 INITIATING CONDITIONS

A spill of hazardous/radiological material occurs, or a release of radiological contamination occurs outside of the posted radiological area.

2.0 IMMEDIATE ACTIONS

NOTE

Due to the unanticipated sequence of emergency events, the actions in this procedure can be performed simultaneously or in any order as directed by the Building Emergency Director (BED).

WARNING

The BED assesses environmental issues in conjunction with Environmental.

2.1 The BED shall:

2.1.1 **STOP** work and
PLACE the area in a safe configuration.

3.0 FOLLOW-UP ACTIONS

3.1 The BED shall ENSURE the following actions are performed:

3.1.1 **STOP** work activities in the hazard area.

3.1.2 **WARN** people in the immediate area.

3.1.3 **ISOLATE** the area by guarding the entrance, establishing boundaries, and **NOT ALLOWING** personnel to unknowingly enter.

3.1.4 **MINIMIZE** the spread, if possible.

3.1.5 **SECURE** unfiltered ventilation, as appropriate.

3.1.6 **NOTIFY** facility personnel of the situation, as appropriate.

3.1.7 **EVACUATE** the hazard area, as appropriate.

3.1.8 **ENSURE** personnel **STAY UPWIND** of the hazard area and at a safe distance.

3.1.9 **IF** the event involves contaminated personnel, **IMPLEMENT** ERP-222S-008, *Personnel Contamination.*

3.1.10 **IF** the event involves a spill/release of radiological contamination, **ENSURE** Radiological Control (RC) personnel have been notified. (See Appendix A for outside spill/release.)

3.1.11 **IF** the event involves a spill/release of hazardous chemical, **ENSURE** Industrial Hygienist (IH) and Chemical Hygiene Officer have been notified. (See Appendix A for outside spill/release.)

3.1.12 **IMPLEMENT** BED check-listed duties from DOE-0223, *Recognizing and Classifying Emergencies*, RLEP 1.1, *Hanford Incident Command System and Event Recognition and Classification.*

3.1.13 **CALL** 9-1-1 to obtain additional resources and event monitoring support.

3.1.14 **ENSURE** the spill or release is stopped/contained.

3.1.15 **DETERMINE** the cause or source of the spill.

3.1.16 **ENSURE** notification has been conducted, in accordance with TFC-ESHQ-ENV-FC-C-01, *Environmental Notification.*

3.1.17 **COMPLETE** all required notifications in accordance with the following

- DOE-0223, *Emergency Plan Implementing Procedure*
- TFC-OPS-OPER-C-24, *Occurrence Reporting and Processing of Operations Information*
- TFC-OPS-OPER-D-01, *Event Notification*

4.0 RECORDS

NOTE

The Hanford Site remains under a full moratorium on the destruction of record material until further notice.

Record Description	Vital Record Y/N	QA Record Y/N	QA Record Retention L/NP	NARA Retention Schedule	Other Retention Requirements	Records Custodian
No records are generated by this procedure.	NA	NA	NA	NA	NA	NA

Appendix A. Actions for Spill/Release that Occurs Outside the Facility

If the spill/release occurs outside the facility, the following actions are to be taken:

Building Emergency Director (BED) (In conjunction with the Incident Commander)

Initial Actions

1. Implement protective actions (take cover/evacuation) for personnel in/near event scene hazard area (facility sirens, public address, or other means).

2. Determine safe route(s) of travel and personnel gathering area(s).

3. Direct personnel involved in accident to move 100 ft upwind of scene or to appropriate inside location, and establish the affected area.

4. Direct personnel to report to gathering area(s).

5. If there is a radiological/chemical release immediately threatening nearby facilities, **CALL 9-1-1**, and initiate a take cover of the affected area.

6. If unable to access mask station, request Hanford Fire Department (HFD) response to stabilize spill.

7. Implement BED checklisted duties from DOE-0223, RLEP 1.1

8. Ensure upper management and DOE-ORP are notified of events in progress, as applicable.

Additional Actions:

1. Ensure emergency response cabinets/equipment are restocked upon completion of response activities.

Facility Operations Specialist (In conjunction with the RHA, CHA, OSC)

1. Implement Facility Operations Specialist (FOS) checklisted duties from DOE-0223, RLEP 1.1.

2. Direct personnel involved in accident to move 100 ft upwind of scene or to appropriate inside location, and establish the affected area.

3. Designated response personnel may include the following:

   - Team 1 (Victim/Boundary Team) – typically three Health Physic Technicians (HPTs)/two Chem Techs to report to FOS/Rad Hazards Assessor to attend to victims, establish/verify physical boundaries, and initiate air sampling.

   - Team 2 (Mitigation Team) – typically two HPTs/one Chem Tech to obtain powered air purifying respirator (PAPR) with hood, or equivalent, don two sets personal protective equipment (PPE) and report to FOS/Rad Hazards Assessor to conduct mitigation activities doffing of HFD personnel.

   - Designate additional resources as requested.

4. Direct available personnel to control access to affected area until physical boundaries can be established.

5. Determine spill mitigation method based on extent of visible release, severity of event based on package contents, DE-Ci's contained in waste package, and documented chemical constituents.

6. Request HFD to stabilize spill.

7. Direct Team 1 to attend to victims and establish boundaries and ingress/egress access points.

8. If victim has life-threatening injuries, perform the following:

   – **RENDER (immediately) assistance.**
   – **ENSURE ambulance is en route if required.**
   – **ENSURE personnel are surveyed out of affected area.**

9. Ensure egress area(s) are established to expedite personnel egress from area.

10. If personnel decontamination requirements exceed facility capabilities, coordinate transfer of victim(s) with receiving decontamination facility.

11. At any time, if the extent of release is determined to exceed facility response capability (radiological or chemical), request the HFD to stabilize spill.

12. Brief Team 2 mitigation personnel before entering affected area

13. Designate a path in/path out to limit contamination spread in the affected area.

14. Direct Team 2 to accompany HFD approximately half the distance to the affected contaminated area. Facility personnel will remain there, and the HFD will proceed to the edge of spill area, apply fixative from upwind location until spill is fully covered, and minimize disturbance of spilled container or its contents. Provide direction if alternate method used to stabilize spill.

15. At completion of stabilization application, HFD will proceed back to facility personnel staged approximately half the distance to affected area boundary.

16. Leave sprayer and any hand-carried items at area.

17. Remove outer set of PPE and perform an initial survey performed as directed by HPT personnel.

18. Proceed to affected area boundary, perform surveys, and egress.

19. Determine and report status of event and on-scene personnel to BED.

Task# WRPS-PER-2009-0385.13

E-STARS[R] Report
Task Detail Report
08/06/2009 1655

TASK INFORMATION			
Task#	WRPS-PER-2009-0385.13		
Subject	WRPS-PER-2009-0385; SIG; CATPR-03-02 Develop procedure for preplanned actions for response to contamination in a radiological area (ATS-LO-200-110).		
Parent Task#	WRPS-PER-2009-0385	**Status**	CLOSED 05/05/2009
Reference	WRPS-PER-2009-0385	**Due**	05/11/2009
Originator	^PER CAs	**Priority**	Medium
Originator Phone		**Category**	PER
Origination Date	04/08/2009 1238	**Generic1**	None
Remote Task#		**Generic2**	None
Deliverable	PER Review	**Generic3**	None
Class	None	**View Permissions**	Global
Instructions	*No Instructions*		

ROUTING LISTS

1	Corrective Action	Inactive
	CATPR-03-02 Develop procedure for preplanned actions for response to contamination in a radiological area (ATS-LO-200-110). Deliverable: Approved procedure. RESPONSIBLE MANAGER: When this corrective action is complete, enter a closure statement in E-STARS and close the E-STARS subtask. Refer to the Problem Evaluation Request procedure TFC-ESHQ-Q-C-C-01, Section 4.4 for closure documentation requirements	
	• Hardy, Don B - Assign - Completed with comments - 04/29/2009 1426 *Instructions:*	
	• Gregory, Rob - Review - Concur with comments - 05/05/2009 1358 *Instructions:*	
	• ^Independent Assessment Review - Review - Withdrawn - 04/16/2009 0753 *Instructions:* Independent Assessor Review	

ATTACHMENTS

Attachments	1. 0900518_09-ESQ-082_WRPS_-_[0903111137].pdf 2. 2009-0385.11 Additional Rosters.pdf 3. ATS-LO-200-110.doc 4. Concern 1 - Remedial CA, TFC-CHARTER-42.doc 5. Finding 1 - Remedial CA, Base Operations Shift Instructions 10-17-08.doc 6. Finding 1 - Remedial CA, EIR-2008-024.pdf 7. Finding 3 - Remedial CA, ATS-LO-200-110.doc 8. Finding 3 - Remedial CA, ERP-222S-009.doc 9. Finding 6 - Remedial CA, Course 35E001 ITEM Report.pdf 10. Link to PER 11. RCA/CCA Report.pdf 12. SigPER 2009-0385.11 Support Docs.pdf

Task# WRPS-PER-2009-0385.13

COMMENTS			
Poster	Hardy, Don B - 04/29/2009 1426		
	Completed		
	LO-200-110 identifying pre-planned actions for response to contamination in a radiological area was issued on 4/29/09. See attached document. dbh 4/29/09.		
Poster	Gregory, Rob (Mata, Beth L) - 05/05/2009 1358		
	Concur		
	Reviewed associated closure documentation and concur with closure. BLM for REG		
Poster	^PER CAs (Steelman, Tracy L (inactive)) - 05/05/2009 1422		
	Steelman, Tracy L -- CLOSED		
	Reviewed and closed. tls 5/5/09		
TASK DUE DATE HISTORY			
Modified	04/08/2009 1238 - ^PER CAs	**New Due Date**	05/11/2009 0000
Modified	04/08/2009 1238 - ^PER CAs	**New Due Date**	03/19/2010 0000
SUB TASK HISTORY			
No Subtasks			

-- end of report --

222-S Laboratory
Laboratory Operating Procedure

222-S Laboratory Response to Contamination Detected in Laboratory Radiological Areas

Technical Authority: TS Kimmel **Review Designation: S,R,J,EP**

CONTENTS

1.0 PURPOSE AND SCOPE 3

2.0 SOURCES 3
- 2.1 Requirements 3
- 2.2 References 3

3.0 PRECAUTIONS AND LIMITATIONS 3

4.0 SPECIAL TOOLS, EQUIPMENT, AND MATERIALS 4

5.0 PREREQUISITES 4

6.0 INSTRUCTIONS 5
- 6.1 Upon Discovery of Contamination Detected Outside of Fume Hood or Hot Cells Such As: 5
- 6.2 Perform Radiological Surveys in Response to a Radiological Condition 5
- 6.3 Evaluate Radiological Survey Results 5
- 6.4 Perform Investigative Radiological Surveys using a Job-Specific RWP 6
- 6.5 Evaluate Results of Investigative Surveys and Develop a Recovery Plan 6

7.0 RECORDS 7

8.0 BIBLIOGRAPHY 7

Revision Status

Change Level	Released for Training Date	Released for Use Date	Pages	Description
A-0	03/04/2009	03/10/2009	All	New procedure to provide a response to contamination detected in laboratory radiological areas
B-0	04/22/2009	04/29/2009	All	Response to OA 5940 question; provide directions for referral to ERP-222S-009; specify FOM as part of management; clarify contamination turn-back levels and criteria for path forward; provide guidance for management decisions and Operations actions to be based on input from Radiological Controls

All trademarks and registered trademarks are the property of their respective owners.

1.0 PURPOSE AND SCOPE

This procedure provides direction to all 222-S personnel for response to contamination detected in laboratory radiological areas.

2.0 SOURCES

2.1 Requirements

N/A

Formatted: Normal

2.2 References

ATS-310, *222-S Laboratory Administration*, Section 1.18, "Preparing Recovery Plan"

ERP-222S-008, *Personnel Contamination*

ERP-222S-009, *Spill/Release*

TF-RC-003, *Eberline Model RO-20 Ion Chamber Operation and Source Checks*

TF-RC-009, *GM Portable Survey Instrument Operation and Source Checks*

TF-RC-010, *Portable Alpha Meter (PAM) Operation and Source Checks*

TFC-ESHQ-RP_ARP-C-02, *Automated Personnel Monitor Alarm Response*

TFC-ESHQ-RP_ARP-P-04, *Continuous Air Monitor Alarm Response*

3.0 PRECAUTIONS AND LIMITATIONS

This procedure shall not be used to respond to an emergency condition. See the applicable Emergency Response Procedure (ERP) to respond.

If a spill or release of radioactive contamination beyond the posted radiological area has occurred, implement ERP-222S-009, *Spill/Release.*

If personnel or personal effects contamination occurs, implement ERP-222S-008, *Personnel Contamination.*

Refer to the applicable Tank Operations Contractor (TOC) procedure for an Automated Personnel Monitor (APM) or a Continuous Air Monitor (CAM) alarm.

This procedure does not authorize the user to continue working in areas where the applicable Radiological Work Permit (RWP) void limits have been exceeded.

4.0 SPECIAL TOOLS, EQUIPMENT, AND MATERIALS

Portable survey instrumentation

Radiological posting signs

Survey materials

5.0 PREREQUISITES

None

6.0 INSTRUCTIONS

NOTES

- "Operations" refers to laboratory leader, counting room/surveillance technician, or other designated chemical technician.
- "Management" refers to a joint consensus between Facility Operations Management (FOM) and Radiological Controls Management (RCM) personnel.

6.1 Upon Discovery of Contamination Detected Outside of Fume Hood or Hot Cells Such As:

- Spread of contamination outside of laboratory fume hoods above RWP action levels
- Contamination detected as part of a personnel survey (e.g., hand and foot survey upon exit of the labs contamination area [CA]).

6.1.1 **REQUEST** assistance from Health Physics Technician(s) (HPT).

6.1.2 **NOTIFY** Operations of radiological condition.

6.1.3 (Operations) Based upon input from Radiological Controls, **ANNOUNCE** details of the radiological condition.

6.1.4 (Operations) Based upon input from Radiological Controls, **INSTRUCT** personnel to limit movement or orderly egress from areas when conditions warrant.

6.2 Perform Radiological Surveys in Response to a Radiological Condition

6.2.1 (Management) **BRIEF** the HPT responding to the radiological condition with the turn-back levels of 15,000 dpm/100 cm^2 beta-gamma and 300 dpm/100 cm^2 alpha and verbal direction.

6.2.2 (HPT) **PERFORM** radiological surveys of the affected area as directed by management.

6.2.3 (HPT) **REPORT** results of radiological surveys to management.

6.3 Evaluate Radiological Survey Results

6.3.1 (Management) **DETERMINE** a path forward based on the radiological survey results with one of the following scenarios:

a. **IF** results are less than 10,000 dpm/LAW beta-gamma and no detectable alpha/LAW, **RESUME** normal operations.

1. **NOTIFY** Facility Operations Management (FOM) of results of radiological surveys.

2. (Operations) **ANNOUNCE** that normal operations may resume.

b. **IF** results are greater than 10,000 dpm/LAW beta-gamma or detectable alpha/LAW, **SUSPEND** normal operations.

1. **PROVIDE** a means for personnel in affected areas to exit.

2. (Operations) **MAKE** announcement to perform orderly egress from affected areas.

3. (Operations) **POST** all entrances/exits to the affected areas as directed by management.

4. (Operations) **UPDATE** the 222-S status board in room 3B with the current posting status.

6.4 Perform Investigative Radiological Surveys using a Job-Specific RWP

6.4.1 (Management) **BRIEF** HPT performing investigative radiological surveys with the requirements of the high-risk, job-specific RWP.

6.4.2 (HPT) **PERFORM** investigative radiological surveys as directed by management.

6.4.3 (HPT) **REPORT** results of investigative radiological surveys to management.

6.5 Evaluate Results of Investigative Surveys and Develop a Recovery Plan

6.5.1 (Management) **DETERMINE** a path forward based on the radiological survey results with one of the following scenarios:

a. **DEVELOP** a recovery plan for an individual area determined to be above 15,000 dpm/100 cm^2 beta-gamma or 300 dpm/100 cm^2 alpha.

b. **DEVELOP** a recovery plan for an expanded area if more than two separate locations have been determined to be above 15,000 dpm/100 cm^2 beta-gamma or 300 dpm/100 cm^2 alpha.

c. **CONSIDER** developing a recovery plan for an expanded area if multiple locations have been determined to be greater than 10,000 dpm/LAW beta-gamma or detectable alpha/LAW.

7.0 RECORDS

NOTE

The Hanford Site remains under a full moratorium on the destruction of record material until further notice.

The following records are generated by this procedure.

Record Description	Vital Record Y/N	QA Record Y/N	QA Record Retention L/NP	NARA Retention Schedule	Other Retention Requirements	Records Custodian
Radiological Survey Report (BD-6003-343 or equivalent form)	Y[a]	N	L	Y[a]	NA	Rad Con Manager
[a] Records resulting from other procedures						

These records are handled and maintained in accordance with applicable company records, management standards, and procedures. They will be included on appropriate information inventories and recorded on an approved Records Inventory and Disposition Schedule (RIDS) form.

8.0 BIBLIOGRAPHY

10 CFR 835, *Occupational Radiation Protection*

HNF-5183, *Tank Farm Radiological Control Manual*

HNF-MP-5184, *Radiation Protection Program*

Task# WRPS-PER-2009-0385.14

E-STARS[R] Report
Task Detail Report
08/06/2009 1656

TASK INFORMATION			
Task#	WRPS-PER-2009-0385.14		
Subject	WRPS-PER-2009-0385; SIG; CATPR-03-03 Perform a drill regarding the use of ERP-222S-009 and ATS-LO-200-110 for response to contamination in a radiolog		
Parent Task#	WRPS-PER-2009-0385	**Status**	CLOSED 06/01/2009
Reference	WRPS-PER-2009-0385	**Due**	06/09/2009
Originator	^PER CAs	**Priority**	Medium
Originator Phone		**Category**	PER
Origination Date	04/08/2009 1238	**Generic1**	None
Remote Task#		**Generic2**	None
Deliverable	PER Review	**Generic3**	None
Class	None	**View Permissions**	Global
Instructions	*No Instructions*		

ROUTING LISTS

1	Corrective Action	Inactive
	CATPR-03-03 Perform a drill regarding the use of ERP-222S-009 and ATS-LO-200-110 for response to contamination in a radiological area. Deliverable: Attendance roster of drill. RESPONSIBLE MANAGER: When this corrective action is complete, enter a closure statement in E-STARS and close the E-STARS subtask. Refer to the Problem Evaluation Request procedure TFC-ESHQ-Q-C-C-01, Section 4.4 for closure documentation requirements	
	• Hardy, Don B - Assign - Completed with comments - 05/22/2009 1601 *Instructions:*	
	• Gregory, Rob - Review - Concur with comments - 06/01/2009 0813 *Instructions:*	
	• ^Independent Assessment Review - Review - Withdrawn - 04/16/2009 0753 *Instructions:* Independent Assessor Review	

ATTACHMENTS

Attachments	1. 0900518_09-ESQ-082_WRPS_-_[0903111137].pdf 2. 2009-0385.11 Additional Rosters.pdf 3. Concern 1 - Remedial CA, TFC-CHARTER-42.doc 4. Finding 1 - Remedial CA, Base Operations Shift Instructions 10-17-08.doc 5. Finding 1 - Remedial CA, EIR-2008-024.pdf 6. Finding 3 - Remedial CA, ATS-LO-200-110.doc 7. Finding 3 - Remedial CA, ERP-222S-009.doc 8. Finding 6 - Remedial CA, Course 35E001 ITEM Report.pdf 9. Link to PER 10. Radioactive Waste Container Accident Drill Report.pdf 11. Response to Radiological Contamination Event Drill Report.pdf 12. RCA/CCA Report.pdf 13. SigPER 2009-0385.11 Support Docs.pdf

Task# WRPS-PER-2009-0385.14

COMMENTS			
Poster	Hardy, Don B - 05/22/2009 1601		
	Completed		
	Performed two drills. One regarding the use of ERP-222S-009 for emergency response to a hazardous/radiological spill and a second regarding the use of ATS-LO-200-110 for response to identification of radiological contamination inside a posted radiological area. Drill reports for each are attached. dbh 5/22/09.		
Poster	Gregory, Rob (Mata, Beth L) - 06/01/2009 0813		
	Concur		
	Reviewed closure evidence and concur with closure. BLM for REG		
Poster	^PER CAs (Steelman, Tracy L (inactive)) - 06/01/2009 1104		
	Steelman, Tracy L -- CLOSED		
	Reviewed and closed. tls 6/1/09		
TASK DUE DATE HISTORY			
Modified	04/08/2009 1238 - ^PER CAs	**New Due Date**	06/09/2009 0000
Modified	04/08/2009 1238 - ^PER CAs	**New Due Date**	03/19/2010 0000
SUB TASK HISTORY			
No Subtasks			

-- end of report --

POST-DRILL COVER SHEET

Washington River Protection Solutions
222-S Laboratory Complex

Drill Title: Radioactive Waste Container Handling Accident

Drill # 222-S 040809A

Post Drill Report Completed 04/13/09
Date

Concurrence:

EP Coordinator	04/13/09 Date
Radiological Control	4/13/09 Date
ATL, Operations Manager	4/13/09 Date
222-S Operations Manager	4/13/09 Date

POST-DRILL COVER SHEET

Emergency Preparedness Post Drill Evaluation

Drill Title

Radioactive Waste Container Handling Accident

Date

04/08/09

Scenario

A Chemical Technologist is transporting a 55-gallon waste drum by forklift from the north side of 222-S building to the east end of 222-S building. While approaching the corner on the northeast end of the building an oncoming truck makes the forklift driver swerve and run into a nearby standpipe. The container was crushed, the lid is thrown from the drum and the inner bags are breached spilling dry contents to the ground. The container contains 4.12 DE-Ci's of radioactive material. The driver of the truck continues driving and exits the complex.
The forklift driver was wearing his seat belt and was not hurt. Contamination is spread for approximately 20 ft. downwind from the drum and some contamination has been tracked to the location where the workers called to report the incident. Personnel involved in the accident were surveyed and contamination has been detected on the forklift driver's shoes. The event is classified as a RLEP 1.0-Appendix 1-2.F, Table 1E, Alert, "Radioactive Material Release/Container Handling Accident". This was an ICP limited drill.

Drill Team Assessment

Performance by the facility emergency response organization (FERO) was observed as meets minimum requirements. The drill team noted need for improvement in the areas of timely initiation of a precautionary take cover for the 200 West Area during emergency action level determination, removing the forklift driver from the radiological controlled area in a timely manner and inadequate direction given to a person stationed at an administration building performing door/entry control. Some good practices observed were, very good timeline recording by the incident command post (ICP) recorder and personnel in the ICP worked as a cohesive team.

Good Practices

- Very good timeline recording by the incident command post (ICP) recorder
- Personnel in the ICP worked as a cohesive team

Areas for Improvement

Communications Improvements

Three improvement items were observed at the Incident Command Post:

- *The BED should have given additional information to FERO members for safe route of travel during the initial PAX announcement. This caused two members to miss the first ten minutes of Incident Command Post (ICP) operation awaiting safe route of travel direction.*
- *The BED should have formerly communicated to ICP personnel that they were in an Alert emergency.*
- *A person to meet the first responder could have been sent sooner to meet the Hanford Fire Department.*

Action:
Following the post drill meeting the EP Coordinator advised the BED that enhanced communication is needed to ensure personnel have sufficient information to perform their tasks. Distribute this post drill report to 222-S BED personnel via required reading.

Actionee:
RE Allen
ECD:
04/24/09

Drill Controller, Drill Initiation, Simulation Improvements

The drill team needed an additional radiological evaluator/controller at the scene to enhance drill observation and control.

Action:
The EP Coordinator was present at the post drill meeting and will ensure that additional evaluator/controllers will be available for future radioactive waste container accident drills. Action Complete

Other Areas for Improvement

During the determination for Emergency Action Level classification by the BED, it was observed that the BED should have performed a precautionary 200-West take cover until DeCi information was received. A facility take cover was performed quickly.

Action:

- Distribute a copy of the post drill meeting minutes to Operations and Radiological Control Management for timeliness of information to personnel. Action Complete
- Distribute this post drill report to 222-S Complex personnel via required reading.
- Apply lessons learned from this post drill report during the next scheduled 222-S contamination spread drill. Lessons learned should be administered during the pre-drill evaluator/controller brief.

Actionee:
RE Allen
ECD:
04/24/09

The MO-037 conference room PAX speaker was not operational during the drill, personnel sent runners for communication.

Action:
Repair or replace PAX speaker in the MO-037 conference room.

Actionee:
KJ Greenough
ECD:
04/30/09

Removing the forklift driver from the radiological controlled area should have been performed in a timelier manner. Although numerous personnel including the Operations Section Chief and Facility Operations Specialist asked the forklift driver his physical condition multiple times, the forklift driver should have been attended/released from the radiological zone quicker.

Action:

- Distribute a copy of the post drill meeting minutes to Operations and Radiological Control Management for timeliness of information to personnel. Action Complete
- Distribute this post drill report to 222-S Complex personnel via required reading.
- Apply lessons learned from this post drill report during the next scheduled 222-S contamination spread drill. Lessons learned should be administered during the pre-drill evaluator/controller brief.

Actionee:
RE Allen
ECD:
04/24/09

A person staffing a door during the take cover was instructed to stop and hold personnel at the door but was not instructed that a radiological survey was needed during segregation.

Action: Further consultation with the person manned at the door revealed the person was given limited direction by the PAA. Further clarify the importance to 222-S personnel accountability aides the importance of instructing door monitors that they are to stop, segregate and call for radiological control assistance to survey possible contaminated personnel entering during a radiological take cover.

Actionee:
RE Allen
ECD:
05/28/09

Radiological Control improvement items observed were:

- *Some surveys at the scene were performed to fast and touching of survey instruments observed*
- *There was one instance when the information from the Staplex portable sampler at the scene was not relayed to the RHA in a timely manner*
- *Multiple streams of radiological data came in to the ICP need to channel to the ICP through the radiological hazards assessor to the radiological hazards communicator.*
- *Removing the forklift driver from the radiological controlled area should have been performed in a timelier manner. Although numerous personnel asked the forklift driver his physical condition multiple times, the forklift driver should have been attended/released fro*m the radiological zone quicker.

Action:
Review the above items with 222-S radiological control personnel at a future 222-S radiological control morning meeting.

Actionee:
JD Butler
ECD:
05/22/09

Portability of the exterior radiological control box to the event scene is difficult, box is big and bulky.

Action: Determine alternate methods of transporting the exterior radiological equipment currently being stored in the radiological control box. (Replace box, retrofit box, vehicle, etc.)

Actionee:
JD Butler
ECD:
07/31/09

A facility person that was accounted for during the drill should have been on a permanent PAA list. A newly hired person was not placed on the appropriate list.

Action:

The person has been placed on the appropriate PAA list. Action Complete

The ORP representative requested a reference binder to be located in the primary ICP.

Action: Compile a reference binder for the DOE representative and place in the Incident Command Post.
Actionee:
RE Allen
ECD:
07/31/09

Drill Grade Summary

Objective Grade:	1	2	3	4	5
	Excellent	- - -	Meets minimum requirements	- - -	Significantly below expectations

DRILL OBJECTIVES	1	2	3	4	5	N/A	N/O
I. ICP Operations		X					
II. Event Scene Operations			X				
III. Staging Area Operations			X				
IV. Determine Emergency Classification *		X					
V. Complete Required Emergency Notifications *		X					
VI. Determine and Implement Protective Actions *			X				
VII. Radiological Response			X				
VIII. Chemical Response			X				
IX. Recovery Planning and Event Termination			X				
X. Drill Conduct			X				
Overall Conduct of Operations Performance	**1**	**2**	**3**	**4**	**5**	**N/A**	**N/O**
Command and Control			X				
Teamwork		X					
Communications			X				
Notifications			X				
Turnover		X					
Log Keeping/Timeline		X					
Radiological Control			X				
Industrial Hygiene			X				
Procedural Use			X				
Initial Action Response			X				
Status Updates			X				
Overall Emergency Preparedness Performance	**1**	**2**	**3**	**4**	**5**	**N/A**	**N/O**
ICP Performance		X					
Event Scene Performance			X				
Communications		X					
Notifications			X				
Area Protective Actions			X				
RLEP Use			X				
Status Updates			X				
Classification			X				
911 Call			X				
Teamwork		X					

* Key objectives marked with an asterisk must maintain a 1,2,or 3 grade to obtain an overall satisfactory.

Post Drill Meeting
04/08/09

- During the determination for Emergency Action Level classification by the BED, it was observed that the BED should have performed a precautionary 200-West take cover until DeCi information was received. A facility take cover was performed quickly.
- Hanford Fire Department responded very quickly
- Difficult to hear over radios, use operations channel not simplex channel
- The BED should have given additional information to FERO members for safe route of travel during the initial PAX announcement
- Two members missed the first ten minutes of Incident Command Post (ICP) staffing awaiting safe route of travel direction
- ORP representative had good direction on safe route of travel
- ORP representative was not segregated and surveyed upon entry, may not be issue based on safe route of travel
- Personnel Accountability Aid needs to give specific instruction to people guarding entrance
- Health Physics Technician arrived at the ICP to survey potential FERO members and perform habitability surveys
- Good information on initial PAX announcement for safe routes of travel for facility emergency response organization (FERO) members
- Have someone transport HPT kit to scene; prefer mechanical means, use at least two people etc.
- MO-037 PAX speaker is not working, check volume, etc.
- Staging area manager did not make announcement for phone number to call, however PAAs do have the phone numbers on their personnel accountability sheets and did use the number.
- One person accounted for but not on accountability list, need to put him on the permanent list
- Took a long time to get forklift driver out of the zone at the scene, it gave the appearance that environmental priorities were more important than personnel. Although numerous personnel including the Operations Section Chief and Facility Operations Specialist asked the forklift driver his physical condition numerous times, the forklift driver should have have been attended/released from the radiological zone quicker.
- Initial 911 call by the spotter was long which delayed the call to the BED and other notification
- Good preparation work getting coveralls, PAPR, radiation barriers, instruments, and equipment for the mitigation team
- IH notified early to prep instruments and be ready to respond

- Multiple streams of radiological data coming in to ICP need to channel to the ICP through the radiological hazards assessor to the radiological hazards communicator.
- Needed more copies of SWITS data in the ICP, could have delegated someone to make copies
- HMC should be a FERO member, it was noted that the ICP communicator is from the HMC group but was absent due to other training
- The incident commander stated that the mitigation objectives should have been established sooner
- A person to meet the first responder could have been sent sooner
- The BED should have formerly communicated to ICP personnel that they were in an Alert emergency
- ICP timeline recorder did a very good job of maintaining the timeline
- Good use of FERO identification vests
- The drill team needed another radiological evaluator/controller at the scene
- Radiological Control items at the scene:
  Some surveys at the scene were performed to fast and touching of survey instruments observed
  Adequate PPE at the scene
  Radiological Hazards Assessor had his checklist out and in use
  Good job by RCTs to catch items during surveys in the zone and to correct on the spot
  There was one case when the information from the Staplex at the scene was not relayed to the RHA in a timely manner
- Personnel Accountability completed in 25 minutes
- Personnel in the ICP worked as a cohesive team
- One person manning a door during the take cover was instructed to stop and hold personnel at the door but was not instructed that a survey was needed during segregation.
- The ORP representative requested a reference binder to be located in the primary ICP

COURSE COMPLETION ROSTER

Records Use Only

Course No.	Course Title	Date Completed
172569	222-S Emergency Preparedness Evaluated Drill	4/08/09
Session No. (Records Use Only)	**Location** 222-S	**Beginning Date/Time**

NOTE: IN ORDER TO OBTAIN CREDIT FOR CLASS, FILL OUT FORM ACCURATELY:
1. PRINT NAME IN FORMAT LAST, FIRST, MI (UNLESS NAME IS ALREADY PROVIDED).
2. SIGN NAME IN PERMANENT INK AND PROVIDE REQUESTED INFORMATION.
3. IF YOU DO NOT HAVE A HID OR PAYROLL NUMBER, CONTACT YOUR INSTRUCTOR TO COMPLETE A TRAINING COMPLETION RECORD, FORM A-6001-539.

Billing Info
- ☐ BILLABLE CLASS
- ☐ NON-BILLABLE CLASS

	Hanford ID (HID) or Person ID	Print Name (Last, First, MI)	Signature	Company	CACN (Charge Code)	Billing Code *See Billing Codes Below
1	h00316081	Ross, Roxie R.	Roxie R. Ross	ATL		
2	H9580676	Lehmann Cecily Y	C Lehmann	ATS		
3	0063153	Gray, Everett	[illegible]	ATS		
4	2883252	Howard Carl W	[illegible]	WRPS		
5	H0436612	Hamilton, James T	[illegible]	WRPS		
6	H352940	Kimmel Thomas S	[illegible]	WRPS		
7	H0010693	Tebbe, Smokey	[illegible]	WRPS		
8	h00488435	Renberger, Duane	DJ Renberger	WRPS		
9	h2790307	Baune, HL	HL Baune	WRPS		
10	h00659996	RUBBINS, W. L.	[illegible]	ATL		
11	H0054266	BOSSEREAU JON	[illegible]	WRPS		
12	H0096672	Messer, Robert M.	R Messer	HFD/FH		
13	H0016504	Neff, Cheryl	Cheryl Neff	ATL		
14	h7002777	Fogg, Robin	[illegible]	ATL		
15	H0030341	McLaimant G.L.	[illegible]	WRPS		
16	h0008375	Greenogl, Keith J	[illegible]	WRPS		

Instructor's Name (Printed/Signature)	Date/MSIN	Authenticator's Name (Printed/Signature)	Date/MSIN
RE Allen [signature]	4/8/9 T6-04	RE Allen [signature]	4/8/9 T6-04

COMMENTS:

UNUSED BLOCKS ON COMPLETED FORM NEED NOT BE MARKED N/A OR LINED OUT.

*BILLING CODES: (CB) Complete Bill, (CN) Complete No-Bill, (FB) Fail Bill, (IB) Incomplete Bill, (IN) Incomplete No-Bill, (NB) No Show Bill, (XX) Cancel. IF BLANK, WILL DEFAULT TO COMPLETE BILL (CB).

DISTRIBUTION: ORIGINAL TO TRAINING RECORDS, G6-60

OFFICIAL USE ONLY

A-6001-541 (REV 2)

COURSE COMPLETION ROSTER

Records Use Only

Course No.	Course Title	Date Completed
172569	222-S Emergency Preparedness Evaluated Drill	4/08/09
Session No. (Records Use Only)	**Location**	**Beginning Date/Time**
	MO-037	4/08/09 13:00

NOTE: IN ORDER TO OBTAIN CREDIT FOR CLASS, FILL OUT FORM ACCURATELY:
1. PRINT NAME IN FORMAT LAST, FIRST, MI (UNLESS NAME IS ALREADY PROVIDED).
2. SIGN NAME IN PERMANENT INK AND PROVIDE REQUESTED INFORMATION.
3. IF YOU DO NOT HAVE A HID OR PAYROLL NUMBER, CONTACT YOUR INSTRUCTOR TO COMPLETE A TRAINING COMPLETION RECORD, FORM A-6001-539.

Billing Info
☐ BILLABLE CLASS
☐ NON-BILLABLE CLASS

	Hanford ID (HID) or Person ID	Print Name (Last, First, MI)	Signature	Company	CACN (Charge Code)	Billing Code *See Billing Codes Below
1	H0098493	Bierman, M C	M C Bierman	ATL		
2	H0030318	MURPHY, TA	TA Murphy	ATL		
3	H00 41850	BARELA E M.	Em Barela	ATL		
4	H0094509	Holden S L	S L Holden			
5	H0099988	MOONEY WAYNE A	WA Mooney	WRPS		
6	H0050918	Purinton Anthony D	Anthony Purinton	ATL		
7	H0018252	Deutting, Robert E	Robert E	WRPS		
8	H00 41872	HEROD, GEORGE W.	George Herod	WRPS		
9	H0076683	Catton SA	SA Catto			
10	H0003944	LAI, SUE (chu-hui)	Sue Lai	ATL		
11	H0004446	Conlin, Linda	Linda Conlin	WRPS		
12	H0016432	McGhuey, Michael T	Tom McGhuey	18		
13	H0042320	WILLIAMS R.D. I	R.D. Williams	WRPS		
14	H0080609	BUTLER, STAN N.	Butler	WRPS		
15	H0044070	BARR GARY	Barr	WRPS		
16	H0090179	MACKEY JAMES C.	J. Mackey	WRPS		

Instructor's Name (Printed/Signature)	Date/MSIN	Authenticator's Name (Printed/Signature)	Date/MSIN
RE Allen RE Allen	4/8/9 T6-04	RE Allen RE Allen	4/8/9 T6-04

COMMENTS:

UNUSED BLOCKS ON COMPLETED FORM NEED NOT BE MARKED N/A OR LINED OUT.

*BILLING CODES: (CB) Complete Bill, (CN) Complete No-Bill, (FB) Fail Bill, (IB) Incomplete Bill, (IN) Incomplete No-Bill, (NB) No Show Bill, (XX) Cancel. IF BLANK, WILL DEFAULT TO COMPLETE BILL (CB).

DISTRIBUTION: ORIGINAL TO TRAINING RECORDS, G6-60

OFFICIAL USE ONLY

A-6001-541 (REV 2)

COURSE COMPLETION ROSTER

Records Use Only

Course No.	Course Title	Date Completed
172569	222-S Emergency Preparedness Evaluated Drill	4/08/09
Session No. (Records Use Only)	**Location**	**Beginning Date/Time**
	MO-037	4/08/09 13:00

NOTE: IN ORDER TO OBTAIN CREDIT FOR CLASS, FILL OUT FORM ACCURATELY:
1. PRINT NAME IN FORMAT LAST, FIRST, MI (UNLESS NAME IS ALREADY PROVIDED).
2. SIGN NAME IN PERMANENT INK AND PROVIDE REQUESTED INFORMATION.
3. IF YOU DO NOT HAVE A HID OR PAYROLL NUMBER, CONTACT YOUR INSTRUCTOR TO COMPLETE A TRAINING COMPLETION RECORD, FORM A-6001-539.

Billing Info
☐ BILLABLE CLASS
☐ NON-BILLABLE CLASS

	Hanford ID (HID) or Person ID	Print Name (Last, First, MI)	Signature	Company	CACN (Charge Code)	Billing Code *See Billing Codes Below
1	H0074758	LaPlant, Gary L.		ATL		
2	H0003944	LAI. SUE (Chu-hueiy)	Sue C Lai	ATL		
3	H0035814	Massie, Valerie L.	Valerie L Massie	ATL		
4	H0102422	Fabre, Martha	Martha Fabre	ATL		
5	H9101809	Getz, Andrew W	Andrew W. Getz	ATL		
6	H0031893	KELTNER, KATHERINE A.	KAKeltner	ATL		
7	H0007896	OJANEN, CAROL J.	Carol J. Ojanen	ATL		
8	H0079048	Duncan, James B		WRPS		
9	H0410221	Cooke, GARY A.	Gary A. Cooke	WRPS		
10	H0058860	AKITA, RAYMOND	R Akita	ATL		
11	H0037369	PURCELL, MICHAEL A		ATL		
12	H0046149	Kenneth Johnson	Kenneth Johnson	FH		
13	H0066614	John Relyea		ATL		
14	H0077441	CRONK Craig		FH		
15	H0080785	Baker, Eugene Scott		ATL		
16	H0088518	Ojanen, RA	RAOjanen	ATL		

Instructor's Name (Printed/Signature)	Date/MSIN	Authenticator's Name (Printed/Signature)	Date/MSIN
RE Allen	4/8/9 T6-04	RE Allen	4/8/9 T6-04

COMMENTS:

UNUSED BLOCKS ON COMPLETED FORM NEED NOT BE MARKED N/A OR LINED OUT.

*BILLING CODES: (CB) Complete Bill, (CN) Complete No-Bill, (FB) Fail Bill, (IB) Incomplete Bill, (IN) Incomplete No-Bill, (NB) No Show Bill, (XX) Cancel. IF BLANK, WILL DEFAULT TO COMPLETE BILL (CB).

DISTRIBUTION: ORIGINAL TO TRAINING RECORDS, G6-60

OFFICIAL USE ONLY

A-6001-541 (REV 2)

COURSE COMPLETION ROSTER

Records Use Only

Course No.	Course Title	Date Completed
172569	222-S Emergency Preparedness Evaluated Drill	4/08/09
Session No. (Records Use Only)	**Location** MO-039, 222 SA	**Beginning Date/Time** 4/08/09 13:00

NOTE: IN ORDER TO OBTAIN CREDIT FOR CLASS, FILL OUT FORM ACCURATELY:
1. PRINT NAME IN FORMAT LAST, FIRST, MI (UNLESS NAME IS ALREADY PROVIDED).
2. SIGN NAME IN PERMANENT INK AND PROVIDE REQUESTED INFORMATION.
3. IF YOU DO NOT HAVE A HID OR PAYROLL NUMBER, CONTACT YOUR INSTRUCTOR TO COMPLETE A TRAINING COMPLETION RECORD, FORM A-6001-539.

Billing Info
☐ BILLABLE CLASS
☐ NON-BILLABLE CLASS

	Hanford ID (HID) or Person ID	Print Name (Last, First, MI)	Signature	Company	CACN (Charge Code)	Billing Code *See Billing Codes Below
1	H0094526	Jackson, David R.	David R. Jackson	ATLFI		
2	A7263205	Biggs, Amber K.	Amber K. Biggs	ATLFI		
3	H0041617	Brannan, Ryan R	Ryan R Brannan	ATL		
4	H0032514	McCollock TA	[illegible]	ATL		
5	H0095610	Yager, Gary A.	[illegible]	ATL		
6	H0081349	Smith, John R	[illegible]	WRPS		
7	H2043271	Huber, Heinz J.	[illegible]	PPD		
8	H0086007	CALLAWAY, WILLIAM S	W.S. Callaway	WRPS		
9	H0002599	Lockwood, Larry L	[illegible]	WRPS		
10	H0058083	VISWANATH, RAMPIRS	[illegible]	WRPS		
11	H3390899	WIEWAS, Richard	[illegible]	WRPS		
12	H3879065	OWENS, Janice	J. Owens	WRPS		
13	H1662341	Warrant, R. Wade	R. Wade Warrant	WRPS		
14						
15						
16						

Instructor's Name (Printed/Signature)	Date/MSIN	Authenticator's Name (Printed/Signature)	Date/MSIN
RE Allen RE Allen	4/8/9 / T6-04	RE Allen RE Allen	4/8/9 / T6-04

COMMENTS:

UNUSED BLOCKS ON COMPLETED FORM NEED NOT BE MARKED N/A OR LINED OUT.

*BILLING CODES: (CB) Complete Bill, (CN) Complete No-Bill, (FB) Fail Bill, (IB) Incomplete Bill, (IN) Incomplete No-Bill, (NB) No Show Bill, (XX) Cancel. IF BLANK, WILL DEFAULT TO COMPLETE BILL (CB).

DISTRIBUTION: ORIGINAL TO TRAINING RECORDS, G6-60

OFFICIAL USE ONLY

A-6001-541 (REV 2)

COURSE COMPLETION ROSTER

Records Use Only

Course No.	Course Title	Date Completed
172569	222-S Emergency Preparedness Evaluated Drill	

Session No.	Location	Beginning Date/Time
Records Use Only	2704-Z	04/09/09 12:30

NOTE: IN ORDER TO OBTAIN CREDIT FOR CLASS, FILL OUT FORM ACCURATELY:
1. PRINT NAME IN FORMAT LAST, FIRST, MI (UNLESS NAME IS ALREADY PROVIDED).
2. SIGN NAME IN PERMANENT INK AND PROVIDE REQUESTED INFORMATION.
3. IF YOU DO NOT HAVE A HID OR PAYROLL NUMBER, CONTACT YOUR INSTRUCTOR TO COMPLETE A TRAINING COMPLETION RECORD, FORM A-6001-539.

Billing Info
- ☐ BILLABLE CLASS
- ☐ NON-BILLABLE CLASS

	Hanford ID (HID) or Person ID	Print Name (Last, First, MI)	Signature	Company	CACN (Charge Code)	Billing Code *See Billing Codes Below
1	0085717	McNeill, Jeff S.	Jeff S. McNeill	WRPS		
2	h0048579	Lovesey, Lee M.	[illegible]	WRPS		
3	H0325436	BLANCHARD, COURTNEY A	Courtney Blanchard	DOE		
4	H0072690	Sherman, Yvonne	Yvonne Sherman	DOE-RL		
5	0044870	Cornell, Thomas M	Thomas M Cornell	FH		
6	0047700	DOMNOSKE-RAUCH, LISA A	Lisa Domnoske-Rauch	DOE		
7	0031198	Hammons J.M	[illegible]	WRPS		
8	H0000785	BARGER, JOEL D.	[illegible]	WRPS		
9	h0082636	Schroeder, Robert W	Robert W Schroeder	ATL		
10	h0063741	Morales, Teodoro P.	Teodoro P. Morales	WRPS		
11	H0265560	Michelle D. Iovino	Michelle D. Iovino	WRPS		
12	H0011885	Steven Paul R	[illegible]	FH		
13	H0077425	TR HOERTKORN	[illegible]	DOE		
14	H0021657	Clie, Richard C.	[illegible]	ORP		
15	H0052594	JANSONS, R.S.	[illegible]	PAR/ORP		
16						

Instructor's Name (Printed/Signature)	Date/MSIN	Authenticator's Name (Printed/Signature)	Date/MSIN
RE Allen RE Allen / RE. Allen	4/8/09 / T6-04	RE Allen RE Allen	4/8/09 / T6-04

COMMENTS:

UNUSED BLOCKS ON COMPLETED FORM NEED NOT BE MARKED N/A OR LINED OUT.

*BILLING CODES: (CB) Complete Bill, (CN) Complete No-Bill, (FB) Fail Bill, (IB) Incomplete Bill, (IN) Incomplete No-Bill, (NB) No Show Bill, (XX) Cancel. IF BLANK, WILL DEFAULT TO COMPLETE BILL (CB).

DISTRIBUTION: ORIGINAL TO TRAINING RECORDS, G6-60

OFFICIAL USE ONLY

A-6001-541 (REV 2)

COURSE COMPLETION ROSTER

Records Use Only

Course No.	Course Title	Date Completed
172569	222-S Emergency Preparedness Evaluated Drill	4/8/9
Session No. *Records Use Only*	Location 222-S	Beginning Date/Time

NOTE: IN ORDER TO OBTAIN CREDIT FOR CLASS, FILL OUT FORM ACCURATELY:
1. PRINT NAME IN FORMAT LAST, FIRST, MI (UNLESS NAME IS ALREADY PROVIDED).
2. SIGN NAME IN PERMANENT INK AND PROVIDE REQUESTED INFORMATION.
3. IF YOU DO NOT HAVE A HID OR PAYROLL NUMBER, CONTACT YOUR INSTRUCTOR TO COMPLETE A TRAINING COMPLETION RECORD, FORM A-6001-539.

Billing Info
- ☐ BILLABLE CLASS
- ☐ NON-BILLABLE CLASS

	Hanford ID (HID) or Person ID	Print Name (Last, First, MI)	Signature	Company	CACN (Charge Code)	Billing Code *See Billing Codes Below
1	H0031198	Hammons J. M.	[illegible]	WRPS		
2	H0000785	Butler, Joel D.	[illegible]	WRPS		
3	H0325936	Blanchard, Courtney A.	Courtney Blanchard	ORP		
4	H6265560	DiIorio, Michelle	Michelle DiIorio	WRPS		
5	0085717	McNeill, Jeff S.	Jeff S. McNeill	WRPS		
6	0044870	Cornell, Thomas M	Thomas M Cornell	FH		
7	H0063741	Morales, Teodoro L.	Teodoro L. Morales	WRPS		
8						
9						
10						
11						
12						
13						
14						
15						
16						

Instructor's Name (Printed/Signature)	Date/MSIN	Authenticator's Name (Printed/Signature)	Date/MSIN
RE Allen [signature]	4/8/09 T6-04	RE Allen [signature]	4/8/09 T6-04

COMMENTS:

UNUSED BLOCKS ON COMPLETED FORM NEED NOT BE MARKED N/A OR LINED OUT.

*BILLING CODES: (CB) Complete Bill, (CN) Complete No-Bill, (FB) Fail Bill, (IB) Incomplete Bill, (IN) Incomplete No-Bill, (NB) No Show Bill, (XX) Cancel. IF BLANK, WILL DEFAULT TO COMPLETE BILL (CB).

DISTRIBUTION: ORIGINAL TO TRAINING RECORDS, G6-60

OFFICIAL USE ONLY

A-6001-541 (REV 2)

POST-DRILL COVER SHEET

Analytical Technical Services /222-S Laboratory Complex

Operational Drill

Drill Title: Response to a Radiological Contamination Spread

Post Drill Report Completed 05/21/09
Date

Concurrence:

222-S Complex EP Coordinator	5/21/09 Date
Operations Manager Advanced Technologies and Laboratories International, Inc.	5/21/09 Date
222-S Complex Radiological Control	5/22/09 Date
222-S Complex Operations Manager	5/22/09 Date

POST-DRILL COVER SHEET

OPERATIONAL DRILL
Post Drill
222-S Laboratory Complex

Drill Title:

Response to a Radiological Contamination Spread

Scenario:

During a normal radiological survey at the 8G step-off pad, an employee discovers contamination on their right shoe cover. The employee stops and calls for assistance. The HPT manager and Facility Operations Manager are notified. ATS-LO-200-110, 222-S Laboratory Response to Contamination Detected in Laboratory Radiological Areas should be referenced by the FOM/BED for additional direction.

Noteworthy Practices

- Good facility announcements describing contamination area and to stay clear.
- Good briefing by the Radiological Control Manager to radiological control technicians (RCT) during initial response actions.
- Good interface between the facility operations manager and radiological control manager.
- Contamination spread procedure used. Operations and Radiological Control Management ensured that ATS-LO-200-110, "*222-S Laboratory Response to Contamination Detected in Laboratory Radiological Areas*", was in hand, referenced, and actions implemented.

Areas for Improvement

Two items for improvement were identified during the operational drill:

- This is a drill message could have been used more often. During the initial notification to the responding RCT the contaminated person relayed contamination levels but did not state "this is a drill message", the drill controller corrected the person to include, "this is a drill message".
- The Lab Leader could have used more repeat backs during phone communication.

Action: The items above were discussed with facility emergency response personnel during the post drill meeting. No additional actions recommended. Action Complete

Overall Evaluation:
Performance was graded 3 meets expectations.

Drill Grade Summary

Grade:	1	2	3	4	5
	Excellent	- - -	Meets minimum requirements	- - -	Significantly below expectations

Overall Operational Drill Performance	1	2	3	4	5	N/A	N/O
Upon Discovery of radiological contamination on PPE, at the step-off pad:							
Request assistance from Health Physics Technician(s) (HPT).		X					
Notify Operations of radiological condition.		X					
*(Operations) Based upon input from Radiological Controls, instruct personnel to limit movement or orderly egress from areas when conditions warrant.		X					
*(Management) Brief the HPT responding to the radiological condition with the turn-back levels of 15,000 dpm/100 cm^2 beta-gamma and 300 dpm/100 cm^2 alpha and verbal direction.		X					
*(HPT) Perform radiological surveys of the affected area as directed by management.			X				
When the RCT finds 12,000 dpm/LAW beta-gamma:							
Provide a means for personnel in affected areas to exit.			X				
Suspend normal operations.		X					
*(Operations) Make announcement to perform orderly egress from affected areas.			X				
* (Operations) Post all entrances/exits to the affected areas as directed by management.			X				

Overall Conduct of Operations Performance	1	2	3	4	5	N/A	N/O
Command and Control		X					
Teamwork		X					
Communications			X				
Notifications			X				
Turnover		X					
Log Keeping/Timeline			X				
Radiological Control			X				
Industrial Hygiene						X	
Procedural Use		X					
Initial Action Response		X					
Status Updates			X				

Post Drill
Meeting Minutes
05/19/09

- Good briefing by the Radiological Control Manager to radiological control technicians (RCT) during initial response actions.
- Two RCTs walked through an area that was not surveyed without surveying, in corridor 8-C, approximately 15 feet. RCT personnel immediately determined that they had not surveyed and recovered by surveying themselves and area (no contamination found).
- Additional responding RCTs at the scene performed thorough turnover communication in the survey areas.
- Good interface between the facility operations manager and radiological control manager.
- Direction on large area wipe surveys could have been less confusing by communicating to personnel to swipe specific spots instead of just 10 square meter survey.
- While relaying information to a responding radiological supervisor the radiological manager stated 5000 dpm without designating beta-gamma as the identifier. The supervisor asked for additional information and beta-gamma was supplied.
- This is a drill message could have been used more often. During the initial notification to the responding RCT the contaminated person relayed contamination levels but did not state "this is a drill message", the drill controller corrected the person to include, "this is a drill message".
- The Lab Leader could have used more repeat backs during phone communication.
- Contamination spread procedure used. Operations and Radiological Control Management ensured that ATS-LO-200-110, "*222-S Laboratory Response to Contamination Detected in Laboratory Radiological Areas*", was in hand and referenced.
- Quick response to the scene by the RCTs
- Good facility announcements describing contamination area and to stay clear.
- Good follow-up facility announcements

COURSE COMPLETION ROSTER

Records Use Only

Course No.	Course Title	Date Completed
	RESPONSE TO CONTAMINATION DETECTED IN 222-S LAB. RAD. AREA	
Session No. *Records Use Only*	**Location**	**Beginning Date/Time** 5/19/09

NOTE: IN ORDER TO OBTAIN CREDIT FOR CLASS, FILL OUT FORM ACCURATELY:
1. PRINT NAME IN FORMAT LAST, FIRST, MI (UNLESS NAME IS ALREADY PROVIDED).
2. SIGN NAME IN PERMANENT INK AND PROVIDE REQUESTED INFORMATION.
3. IF YOU DO NOT HAVE A HID OR PAYROLL NUMBER, CONTACT YOUR INSTRUCTOR TO COMPLETE A TRAINING COMPLETION RECORD, FORM A-6001-539.

Billing Info
- ☐ BILLABLE CLASS
- ☐ NON-BILLABLE CLASS

	Hanford ID (HID) or Person ID	Print Name (Last, First, MI)	Signature	Company	CACN (Charge Code)	Billing Code *See Billing Codes Below
1	H0000785	Butler, Joel D.	Joel Dano Butler	WRPS		
2	3529400	Kimmel, Thomas S.	[illegible]	WRPS		
3	R H3376611	Lemmons,	[illegible]	WRPS		
4	0052569	Felder	[illegible]	WRPS		
5		~~Hudson~~				
6	41621650	Krieg	S. Krieg	WRPS		
7	0047372	Miller	[illegible]	WRPS		
8	H0010693	Tefft	[illegible]	WRPS		
9	H0048994	Lawing, Keith J.	Keith Lawing	WRPS		
10	h0001817	Hudson, Robin D	[illegible]	WRPS		
11						
12						
13						
14						
15						
16						

Instructor's Name (Printed/Signature)	Date/MSIN	Authenticator's Name (Printed/Signature)	Date/MSIN

COMMENTS:

UNUSED BLOCKS ON COMPLETED FORM NEED NOT BE MARKED N/A OR LINED OUT.

*BILLING CODES: (CB) Complete Bill, (CN) Complete No-Bill, (FB) Fail Bill, (IB) Incomplete Bill, (IN) Incomplete No-Bill, (NB) No Show Bill, (XX) Cancel. IF BLANK, WILL DEFAULT TO COMPLETE BILL (CB).

DISTRIBUTION: ORIGINAL TO TRAINING RECORDS, G6-60

OFFICIAL USE ONLY

A-6001-541 (REV 2)

COURSE COMPLETION ROSTER

Records Use Only

Course No.	Course Title	Date Completed
	RESPONSE TO CONTAMINATION DETECTED IN 222-S LAB. RAD. AREA	5/19/09
Session No. (Records Use Only)	Location	Beginning Date/Time

NOTE: IN ORDER TO OBTAIN CREDIT FOR CLASS, FILL OUT FORM ACCURATELY:
1. PRINT NAME IN FORMAT LAST, FIRST, MI (UNLESS NAME IS ALREADY PROVIDED).
2. SIGN NAME IN PERMANENT INK AND PROVIDE REQUESTED INFORMATION.
3. IF YOU DO NOT HAVE A HID OR PAYROLL NUMBER, CONTACT YOUR INSTRUCTOR TO COMPLETE A TRAINING COMPLETION RECORD, FORM A-6001-539.

Billing Info
☐ BILLABLE CLASS
☐ NON-BILLABLE CLASS

	Hanford ID (HID) or Person ID	Print Name (Last, First, MI)	Signature	Company	CACN (Charge Code)	Billing Code *See Billing Codes Below
1	H0054266	BOISONEAU JON	J Boisoneau	WRPS		
2	H0041660	Hood Boatright, SL	SL Hood Boatright	WRPS		
3	H0380422	LOUDERBACK, PATRICK, B.	[illegible]	WRPS		
4	H0090260	Peterson Steve L	[illegible]	WRPS		
5	H2883252	Howard, Carl W	Carl Howard	WRPS		
6	H0040043	GUAJARDO, ELIAZAR	E. Guajardo	WRPS		
7						
8						
9						
10						
11						
12						
13						
14						
15						
16						

Instructor's Name (Printed/Signature)	Date/MSIN	Authenticator's Name (Printed/Signature)	Date/MSIN
R.E. ALLEN / RE Allen	5/19/09 / T6-04	R.E. Allen / RE Allen	5/19/09 / T6-04

COMMENTS:

UNUSED BLOCKS ON COMPLETED FORM NEED NOT BE MARKED N/A OR LINED OUT.

*BILLING CODES: (CB) Complete Bill, (CN) Complete No-Bill, (FB) Fail Bill, (IB) Incomplete Bill, (IN) Incomplete No-Bill, (NB) No Show Bill, (XX) Cancel. IF BLANK, WILL DEFAULT TO COMPLETE BILL (CB).

DISTRIBUTION: ORIGINAL TO TRAINING RECORDS, G6-60

OFFICIAL USE ONLY

A-6001-541 (REV 2)

COURSE COMPLETION ROSTER

Records Use Only

Course No.	Course Title	Date Completed
	RESPONSE TO CONTAMINATION DETECTED IN 222-S LAB. RAD. AREA	5/19/09
Session No. (Records Use Only)	**Location**	**Beginning Date/Time**
	222-S	5/19/09

NOTE: IN ORDER TO OBTAIN CREDIT FOR CLASS, FILL OUT FORM ACCURATELY:
1. PRINT NAME IN FORMAT LAST, FIRST, MI (UNLESS NAME IS ALREADY PROVIDED).
2. SIGN NAME IN PERMANENT INK AND PROVIDE REQUESTED INFORMATION.
3. IF YOU DO NOT HAVE A HID OR PAYROLL NUMBER, CONTACT YOUR INSTRUCTOR TO COMPLETE A TRAINING COMPLETION RECORD, FORM A-6001-539.

Billing Info
- ☐ BILLABLE CLASS
- ☐ NON-BILLABLE CLASS

	Hanford ID (HID) or Person ID	Print Name (Last, First, MI)	Signature	Company	CACN (Charge Code)	Billing Code *See Billing Codes Below
1	H0074758	Lathrop, Gary L	[illegible]	NTC		
2	H0063741	Morales, Isidro P.	[illegible]	WRPS		
3	H0031198	Hammons J.M	[illegible]	WRPS		
4	H0068375	Greenough Keith J	[illegible]	WRPS		
5						
6						
7						
8						
9						
10						
11						
12						
13						
14						
15						
16						

Instructor's Name (Printed/Signature)	Date/MSIN	Authenticator's Name (Printed/Signature)	Date/MSIN
R.E. Allen / [illegible]	5/19/09 / T6-04	R.E. Allen / [illegible]	5/19/09 / T604

COMMENTS:

UNUSED BLOCKS ON COMPLETED FORM NEED NOT BE MARKED N/A OR LINED OUT.

*BILLING CODES: (CB) Complete Bill, (CN) Complete No-Bill, (FB) Fail Bill, (IB) Incomplete Bill, (IN) Incomplete No-Bill, (NB) No Show Bill, (XX) Cancel. IF BLANK, WILL DEFAULT TO COMPLETE BILL (CB).

DISTRIBUTION: ORIGINAL TO TRAINING RECORDS, G6-60

OFFICIAL USE ONLY

A-6001-541 (REV 2)

Task# WRPS-PER-2009-0385.15

E-STARS[R] Report
Task Detail Report
08/06/2009 1657

TASK INFORMATION			
Task#	WRPS-PER-2009-0385.15		
Subject	WRPS-PER-2009-0385; SIG; CATPR-04-01 Evaluate the implementation of requirements of HNF-5183 as the		
Parent Task#	WRPS-PER-2009-0385	**Status**	Open
Reference	WRPS-PER-2009-0385	**Due**	08/11/2009
Originator	^PER CAs	**Priority**	Medium
Originator Phone		**Category**	PER
Origination Date	04/08/2009 1238	**Generic1**	None
Remote Task#		**Generic2**	None
Deliverable	PER Review	**Generic3**	None
Class	None	**View Permissions**	Global
Instructions	*No Instructions*		

ROUTING LISTS

1	Corrective Action	Active

Return for Rework - Please address the two comments below...
*Posted By: Milliken, Nancy J acting as Gregory, Rob 08/06/2009 1037
For the reasons stated before, the owner does not concur in the "no action required" position. Re-review the action again and consider an extension to align with submittal of the change to RadCon Forum and DOE for approval.

*Posted By: Maciuca, Tino acting as ^Independent Assessment Review 08/06/2009 1409
Corrective Action CATPR-04-01 as written does not clearly address the finding S-09-ESQ-TANKFARM-003-F04. The ORP Surveillance Report indicates an implementation problem rather that a programmatic issue.

CATPR-04-01 Evaluate the implementation of requirements of HNF-5183 as they apply to General RWPs. Initiate revision to HNF-5183 or RWPs per the results of the evaluation.

Deliverable: Copy of evaluation and revised manual/RWPs,as necessary.

RESPONSIBLE MANAGER: When this corrective action is complete, enter a closure statement in E-STARS and close the E-STARS subtask. Refer to the Problem Evaluation Request procedure TFC-ESHQ-Q-C-C-01, Section 4.4 for closure documentation requirements

- Rolph, Jim T - Assign - Completed - 06/09/2009 0657
  Instructions:

↳ *Routing List:* Route List - Inactive
Instructions: Following instructions provided. Is the use of a general RWPs (radiological conditions known) an appropriate tool to use in responding to an CAM or other radiological Alarm? What is the risk of permitting such a practice?

- Livesey, Lee M - Assign - Completed with comments - 06/08/2009 1425

- Gregory, Rob - Review - Nonconcur with comments - 08/06/2009 1037
  Instructions:

Task# WRPS-PER-2009-0385.15

	• ^Independent Assessment Review(Maciuca, Tino) - Review - Nonconcur with comments - 08/06/2009 1409 *Instructions:* Independent Assessor Review
	• Rolph, Jim T - Assign - Awaiting Response - Due Date - 07/30/2009 0000 *Instructions:*
	• Gregory, Rob - Review - Awaiting Response - Due Date - 08/03/2009 0000 *Instructions:*
	• ^Independent Assessment Review - Review - Awaiting Response - Due Date - 08/08/2009 0000 *Instructions:*
ATTACHMENTS	
Attachments	1. 0900518_09-ESQ-082_WRPS_-_[0903111137].pdf 2. 2009-0385.11 Additional Rosters.pdf 3. Concern 1 - Remedial CA, TFC-CHARTER-42.doc 4. E-tars Action2009-0385.15 RA .doc 5. Finding 1 - Remedial CA, Base Operations Shift Instructions 10-17-08.doc 6. Finding 1 - Remedial CA, EIR-2008-024.pdf 7. Finding 3 - Remedial CA, ATS-LO-200-110.doc 8. Finding 3 - Remedial CA, ERP-222S-009.doc 9. Finding 6 - Remedial CA, Course 35E001 ITEM Report.pdf 10. Link to PER 11. RCA/CCA Report.pdf 12. SigPER 2009-0385.11 Support Docs.pdf
COMMENTS	
Poster	Livesey, Lee M - 06/08/2009 1425
Editor	Livesey, Lee M - 06/11/2009 1132
	Completed
	The action to "Evaluate the implementation of requirements of HNF-5183 as they apply to General RWPs. Initiate revision to HNF-5183 or RWPs per the results of the evaluation." is complete. This analysis confrims that requirements contained in the higher-tier regulation are flowed down into HNF-5183 in accordance with implementing guidance and consistent with the DOE-STD-1098-2008, DOE Standard, Radiological Controls. No revision to HNF-5183 is required. However, current language in HNF-5183 may be overly prescriptive in making distinction between classes of RWPs (e.g. general vice job-specific). Analysis of the controls in general RWPs used in response to abnormal operating conditions indicates a generally conservative approach. In other words, if responses to identified conditions were to be authorized via a job-specific RWP instead of a general one, the limiting conditions authorized and turn-back values established would not change. Only the category of RWP would be changed. A follow-up action in response to this analysis will be to submit for consideration and review by TOC Radiological Control Forum a Forum Action Tracking (FACT) proposal. This proposal will detail the identified issue and present to the Forum alternative solutions for clarification and/or necessary revisions to HNF-5183 or other implementing documents. Consideration will be given in the FACT to remove differing categories of Radiological Work Permits (i.e. move toward a description of RWPs as an administrative mechanism to authorize to control entry into and perform work within radiological areas). The recommendation of the Radiological Control Forum will be utilized as the basis for any needed changes to either the HNF-5183 and/or implementing procedures.. Preparation of the FACT will be prepared and submitted by August 15, 2009. Responsible person is Lee Livesey. Evidence of completion will be submission of FACT to the WRPS Radiological Control Forum.
Poster	^PER Coordinator (Steelman, Tracy L (inactive)) - 06/15/2009 1303

Task# WRPS-PER-2009-0385.15

	Steelman, Tracy L -- Due Date Extension
	Corrective Action item - modification to synchronize with E-STARS.'Action Due Date' was changed. Corrective Action item - modification to synchronize with E-STARS.'Action' was changed.
Poster	^PER CAs (Steelman, Tracy L (inactive)) - 06/15/2009 1311
	Approved due date extension to 7/30/09. tls 6/15/09
	Extension Justification: The TFRCM may need to be changed to align more with the regulations and remove subjective wording that created this concern. The process for making a change to the TFRCM is through the Rad Con Forum process. The change requires that this formal process take place and this process takes time. Where an RWP can be changed in a few hours, it takes a few weeks to make a change to the RadCon Manual (TFRCM). The extension was approved by F. Beranek, ESRB Sponsor, on 6/15/09. tls 6/15/09
Poster	Gregory, Rob (Milliken, Nancy J) - 08/06/2009 1037
	Nonconcur
	For the reasons stated before, the owner does not concur in the "no action required" position. Re-review the action again and consider an extension to align with submittal of the change to RadCon Forum and DOE for approval.
Poster	^Independent Assessment Review (Maciuca, Tino) - 08/06/2009 1409
	Nonconcur
	Corrective Action CATPR-04-01 as written does not clearly address the finding S-09-ESQ-TANKFARM-003-F04. The ORP Surveillance Report indicates an implementation problem rather that a programmatic issue.

TASK DUE DATE HISTORY

Modified	06/15/2009 1304 - ^PER Coordinator	**New Due Date**	07/30/2009 0000
Modified	04/08/2009 1238 - ^PER CAs	**New Due Date**	05/05/2009 0000
Modified	04/08/2009 1238 - ^PER CAs	**New Due Date**	03/19/2010 0000

SUB TASK HISTORY

No Subtasks

-- end of report --

The results of a surveillance conducted by the U. S. Department of Energy, Office of River Protection (ORP) from October 1 through December 31, 2008 were documented in PER2009-0385. The purpose of the surveillance was to evaluate WRPS Response to Abnormal Events. The surveillance team found emergency response and Conduct of Operations deficiencies in which the Base Operations and 222-S Laboratory management team did not implement approved Abnormal Response Procedures and processes following indications of abnormal operating conditions. The surveillance yielded the following finding specific to the use of Radiological Work Permits:

Finding S-09-ESQ-TANKFARM-003-F04 - General Radiological Work Permits are inappropriately utilized for emergency response activities.

Corrective Action CATPR-04-01 generated by WRPS in response to this finding is to "Evaluate the implementation of requirements of HNF-5183 as they apply to General RWPs. Initiate revision to HNF-5183 or RWPs per the results of the evaluation."

The following represents the evaluation of the identified issue:

Part 835 of title 10 of the CFR "Occupational Radiation Protection" sets forth the nuclear safety requirements that provide radiological protection for DOE workers and members of the public in a controlled area at a DOE facility. 10 CFR 835 contains the following requirement generally addressing written authorizations for control of entry and work in radiological areas:

> *§ 835.501 Radiological areas.*
>
> *d) Written authorizations shall be required to control entry into and perform work within radiological areas. These authorizations shall specify radiation protection measures commensurate with the existing and potential hazards.*

DOE G 441.1-1C "Radiation Protection Programs Guide for use with Title 10, Code of Federal Regulations, Part 835, 'Occupational Radiation Protection" contains the following guidance with respect to the referenced written work authorizations:

> ***4.2.6 Radiological Work/Experiment Administration and Planning***
> *10 CFR 835.1003 requires that during routine operations, the combination of engineered and administrative controls shall provide that the anticipated occupational dose to general employees shall not exceed the limits established in 10 CFR 835.202 and that the ALARA process is utilized for personnel exposures to ionizing radiation. Additionally, 10 CFR 835.501(d) requires written authorizations to control entry into and perform work within radiological areas. Often, these written authorizations take the form of radiological work permits (RWP) or technical work documents (TWD) associated with jobs or experiments. These written authorizations provide a convenient mechanism to integrate ALARA review of work tasks if the requirement for ALARA review is embodied in the written authorization. Optimization methodologies and appropriate radiological judgment should be used to develop numerical criteria and/or trigger points for determining when a formal ALARA review of planned radiological work activities is required. Once conducted, the completed ALARA review should be incorporated into the written authorizations for the work activity.*

DOE-STD-1098-2008, DOE Standard, Radiological Controls provides the following information

with respect to these written authorizations (e.g. Radiological Work Permits):

PART 2 Work Preparation

321 Radiological Work Permits

The RWP is an administrative mechanism used to establish radiological controls for intended work activities. The RWP informs workers of area radiological conditions and entry requirements and provides a mechanism to relate worker exposure to specific work activities.

1. The RWP should be integrated with other work authorizations that address safety and health issues, such as those for industrial safety and hygiene, welding, or confined space entry. An alternative formal mechanism, such as written procedures or experiment authorizations, may be used in lieu of an RWP as the administrative control over radiological work activities. If an alternative mechanism is used, it should meet the standards established in this Article and Articles 322 and 323.The RWP should include the following information, unless the information is contained in other related work-control documents:

a. Description of work
b. Work area radiological conditions
c. Dosimetry requirements, including any bioassay requirements
d. Pre-job briefing requirements, as applicable
e. Training requirements for entry
f. Protective clothing and respiratory protection requirements
g. Radiological Control coverage requirements and stay time controls, as applicable
h. Limiting radiological conditions that may void the RWP
i. Special dose or contamination reduction considerations
j. Special personnel frisking considerations
k. Technical work document number, as applicable
l. Unique identifying number
m. Date of issue and expiration
n. Authorizing signatures.

2. If necessary to ensure appropriate accounting, the RWP number should be used in conjunction with the radiation dose accounting system to relate individual and/or collective dose to specific activities.

322 Use of Radiological Work Permits

Many facilities find it effective to use two different types of RWPs. General RWPS are used for entry and repetitive work in areas with known and stable low-hazard radiological conditions. Job-specific RWPs are used for more complex work and for entry into higher-hazard areas.

1. RWPs should be used to control the following activities:

a. Entry into radiological areas
b. Handling of materials with removable contamination that exceed the values of Table 2-2

c. Work in localized benchtop areas, laboratory fume hoods, sample sinks, and containment devices that has the potential to generate contamination in areas that are otherwise free of contamination

d. Work that disturbs the soil in soil contamination areas

e. Work that involves digging in underground radioactive material areas.

2. Job-specific RWPs should be used to control non-routine operations or work in areas with changing radiological conditions. The job-specific RWP should remain in effect only for the duration of the job.

3. General RWPs may be used to control routine or repetitive activities, such as tours and inspections or minor work activities, in areas with well-characterized and stable radiological conditions. General RWPs should be periodically reviewed and updated, consistent with the site ISM process.

4. RWPs should be updated if radiological conditions change to the extent that protective requirements need modification.

5. RWPs should be posted at the access point to the applicable radiological work area or otherwise made available at the work location.

6. Workers should acknowledge by signature or through electronic means where automated access systems are in place, that they have read, understand, and will comply with the RWP prior to initial entry to the area and after revisions to the RWP that affect the radiological controls.

7. If needed for dose accounting purposes, worker pocket or electronic dosimeter readings should be recorded in a format that identifies and provides linkage to the applicable RWP.

8. An alternative formal mechanism, such as written procedures or experiment authorizations, may be used in lieu of an RWP as the administrative control over radiological work activities. If an alternative mechanism is used, it should meet the standards established in this Article and Articles 321 and 323.

The information with respect to Radiological Work Permits discussed in the 10 CFR 835 Implementation Guide as promulgated in the DOE Radiological Control Standard is carried in the Tank Farms Radiological Control Manual "HNF-5183" in nearly identical language for the use of General and Job-Specific categories.

321 Radiological Work Permits

Written authorizations shall [835.501(d)] be required to control entry into and perform work within radiological areas. [RPP # 114] These authorizations shall [835.501(d)] specify radiation protection measures commensurate with the existing and potential hazards.[RPP # 115] The Radiological Work Permit (RWP) is an administrative mechanism used to establish radiological controls for intended work activities. The RWP informs workers of area radiological conditions and entry requirements and provides a mechanism to relate worker exposure to specific work activities.

1. The RWP should, at a minimum, include the following information:

a. Description of work; b. Initial and anticipated work area radiological conditions;

c. Dosimetry requirements;

d. Pre-job briefing requirements, as applicable;

e. Radiological training requirements for entry;

f. Protective clothing and respiratory protection requirements; g. Radiological Control coverage requirements and stay time controls, as applicable; h: Radiological conditions that, if encountered, could result in:

1. Exceeding an RWP void limits,
2. exceeding an RWP safe condition level, or
3. exceeding any RWP action levels.

i. Exposure control and reduction requirements;
j. Contamination control and reduction requirements;
k. Special personnel frisking considerations;
l. Technical work document number, as applicable;
m. Unique identifying number; n. Date of issue and expiration; and o. Authorizing signatures; p. Entry control requirements. 2. The RWP should be integrated with other work authorizations that address safety and health issues, such as those for industrial safety and hygiene, welding, or confined space entry. 3. If necessary to ensure appropriate accounting, the RWP number should be used in conjunction with the radiation dose accounting system to relate individual and/or collective dose to specific activities.

322 Use of Radiological Work Permits

1. RWPs should be used to control the following activities:
a. Entry into High and Very High Radiation Areas
b. Entry into High Contamination Areas
c. Entry into areas with airborne radioactivity levels exceeding or potentially exceeding 0.1 DAC
d. Entry into Radiation Areas;
e Entry into Contamination Areas; or
f Handling of materials with removable contamination that exceed the values of Table 2-2.

2. Job-specific RWPs should be used to control non-routine operations or work in areas with changing radiological conditions. The job-specific RWP should remain in effect only for the duration of the job, not to exceed 1 year.
3. General RWPs may be used to control routine or repetitive activities, such as tours and inspections or minor work activities, in areas with well-characterized and stable radiological conditions. General RWPs should not be approved for periods longer than 1 year.
4. Radiological surveys should be routinely reviewed to evaluate adequacy of RWP requirements. RWPs should be updated if radiological conditions change to the extent that protective requirements need modification.
5. RWPs should be posted at the access point to the applicable radiological work area.
6. Workers should acknowledge by signature or through electronic means where automated access systems are in place that they have read, understand and will comply with the RWP prior to initial entry to the area and after any revisions to the RWP.
7. Worker pocket or electronic dosimeter readings should be recorded in a format that identifies and provides linkage to the applicable RWP.
8. An alternative formal mechanism, such as written procedures or experiment authorizations, may be used in lieu of an RWP as the administrative control over radiological work activities. If an alternative mechanism is used, it should meet the requirements of this Article and Articles 321 and 323.

The safety envelop of a nuclear facility is primarily defined through development and maintenance of the appropriate safety basis documents. An integral component of the safety basis is the Structures, Systems and Components (SSCs) that have been credited in the Documented Safety Analysis (DSA).

It can clearly be seen from this review, that there is nothing in and of itself that would preclude the use of general radiological work permits during responses to abnormal plant operating indicators. Any responses to such conditions to verify operating status using these general RWPs would be bounded for worker safety by the limiting conditions established for the

radiological areas authorized for access by these general permits. That is, the bounding condition for removable contamination in an area posted as a Radiological Buffer Area for contamination control would be those established in the HNF5183 Table 2-2 limits. Bounding conditions for a Contamination Area would have corresponding limits of 100,000 dpm/100cm2 $\beta\gamma$ and 2,000 dpm/100cm2 α. Were these conditions to be exceeded during a response to facility conditions, the void limits and corresponding actions would be taken by responders.

Additionally, the response to abnormal plant operating indicators would be in conjunction with other governing documents such as an Abnormal Operating Procedures, Alarm Response Procedures, or others to provide both directed actions and safe operating envelope.
Where specific alarm conditions have been evaluated and are indicators of analyzed conditions as in the case of over-ground transfers of tank waste retrievals, the specific monitoring plans contain expected action using pre-established responses. In these cases, anticipated conditions and expected radiological conditions are analyzed with respect to indicators of waste leaks and unexpected conditions. In these cases, work documents and Radiological Work Permits specific to the activity are developed and approved in advance of commencement of operations.

It is inherent in the hazard analysis process that a comprehensive spectrum of accidents, including those that may have a higher likelihood, are identified, evaluated, and analyzed. Any accidents that have a significant consequence potential to the public or workers, independent of likelihood, is thoroughly evaluated, including the identification of any appropriate safety SSCs or administrative controls in the safety basis. In essence, by definition, the natures of these types of abnormal events are well identified and configured within the hierarchy of the identified controls.

Both methods of response (i.e. general and job-specific radiological work permits) provide adequate measures of worker protection and are acceptable practices for response to abnormal operating conditions when the hazards can be bounded by anticipated worst-case conditions. However, the utilization of a general RWP in response to abnormal operating conditions requires a higher level of confidence in known and/or anticipated radiological conditions. Facilities should review abnormal operating procedures and alarm-response procedures where general RWPs are utilized to ensure appropriate levels of safety assurance can be maintained with their use.

In conclusion, it is evident that the requirements contained in the higher-tier regulation are flowed down into HNF-5183 in accordance with implementing guidance and consistent with the DOE Standard. However, current language in HNF-5183 may be overly prescriptive in making distinction between classes of RWPs (e.g. general vice job-specific).

Analysis of the controls in general RWPs used in response to abnormal operating conditions indicates a generally conservative approach. In other words, if responses to identified conditions were to be authorized via a job-specific RWP instead of a general one, the limiting conditions authorized and turn-back values established would not change. Only the category of RWP would be changed.

A follow-up action in response to this analysis will be to submit for consideration and review by TOC Radiological Control Forum a Forum Action Tracking (FACT) proposal. This proposal will detail the identified issue and present to the Forum alternative solutions for clarification and/or necessary revisions to HNF-5183 or other implementing documents. Consideration will be given in the FACT to remove differing categories of Radiological Work Permits (i.e. move toward a description of RWPs as an administrative mechanism to authorize to control entry into and perform work within radiological areas). The recommendation of the Radiological Control Forum will be utilized as the basis for any needed changes to either the HNF-5183 and/or implementing procedures..

Preparation of the FACT will be prepared and submitted by August 15, 2009. Responsible person is Lee Livesey.

Evidence of completion will be submission of FACT to the WRPS Radiological Control Forum.

Task# WRPS-PER-2009-0385.16

E-STARS[R] Report
Task Detail Report
08/06/2009 1658

TASK INFORMATION			
Task#	WRPS-PER-2009-0385.16		
Subject	WRPS-PER-2009-0385; SIG; CC-04-01 Schedule Radiological Control to perform a minimum of 2 management observations a month, focusing on compliance to t		
Parent Task#	WRPS-PER-2009-0385	**Status**	CLOSED 05/04/2009
Reference	WRPS-PER-2009-0385	**Due**	05/05/2009
Originator	^PER CAs	**Priority**	Medium
Originator Phone		**Category**	PER
Origination Date	04/08/2009 1238	**Generic1**	None
Remote Task#		**Generic2**	None
Deliverable	PER Review	**Generic3**	None
Class	None	**View Permissions**	Global
Instructions	*No Instructions*		

ROUTING LISTS

1	Corrective Action	Inactive
	CC-04-01 Schedule Radiological Control to perform a minimum of 2 management observations a month, focusing on compliance to the TFRCM and implementation of 10 CFR 835, "Occupational Radiation Protection," and HNF-MP-5184, "Washington River Protection Solutions Radiation Protection Program (RPP)." Deliverable: Copy of schedule to include expectations, topical areas, and assignees. RESPONSIBLE MANAGER: When this corrective action is complete, enter a closure statement in E-STARS and close the E-STARS subtask. Refer to the Problem Evaluation Request procedure TFC-ESHQ-Q-C-C-01, Section 4.4 for closure documentation requirements	
	• Hyman, Sandra D - Assign - Completed with comments - 04/23/2009 1133 *Instructions:* ↳ *Routing List:* Route List - Inactive *Instructions:* Brad - please confirm with me that you have this action and that it can be completed by next Friday. Sandy • Brannan, Patrick (Brad) - Assign - Completed with comments - 04/21/2009 1236	
	• Gregory, Rob - Review - Concur with comments - 04/27/2009 1316 *Instructions:*	
	• ^Independent Assessment Review - Review - Withdrawn - 04/16/2009 0753 *Instructions:* Independent Assessor Review	

ATTACHMENTS

Attachments	1. 0900518_09-ESQ-082_WRPS_-_[0903111137].pdf 2. 2009-0385.11 Additional Rosters.pdf 3. Concern 1 - Remedial CA, TFC-CHARTER-42.doc

Task# WRPS-PER-2009-0385.16

	4. Finding 1 - Remedial CA, Base Operations Shift Instructions 10-17-08.doc 5. Finding 1 - Remedial CA, EIR-2008-024.pdf 6. Finding 3 - Remedial CA, ATS-LO-200-110.doc 7. Finding 3 - Remedial CA, ERP-222S-009.doc 8. Finding 6 - Remedial CA, Course 35E001 ITEM Report.pdf 9. Link to PER 10. RCA/CCA Report.pdf 11. SigPER 2009-0385.11 Support Docs.pdf 12. WRPS-0900621 - Closure of Corrective Action CC-04-01 For WRPS-PER-2009-0385 16 .pdf
COMMENTS	
Poster	Brannan, Patrick (Brad) (Bickel, Eric E) - 04/21/2009 1236
	Completed
	Sandy- I just spoke with Jim Dupaquier; he is currently drafting your response to Rob Gregory. The response should be completed this PM and ready for Brad's and your review. There should be no problem with getting the formal copy to Rob by Friday. Above response provided by EE Bickel.
Poster	Hyman, Sandra D - 04/23/2009 1133
	Completed
	See attached WRPS-0900621 as closure documentation.
Poster	Gregory, Rob (Mata, Beth L) - 04/27/2009 1316
	Concur
	Reviewed and concur with closure statement and documented evidence. BLM for REG
Poster	^PER CAs (Steelman, Tracy L (inactive)) - 05/04/2009 0943
	Steelman, Tracy L -- CLOSED
	Reviewed and closed. tls 5/4/09

TASK DUE DATE HISTORY

Modified	04/08/2009 1238 - ^PER CAs	**New Due Date**	05/05/2009 0000
Modified	04/08/2009 1238 - ^PER CAs	**New Due Date**	03/19/2010 0000

SUB TASK HISTORY

No Subtasks

-- end of report --

washington river protection solutions

INTEROFFICE MEMORANDUM

WRPS-0900621

Date: April 22, 2009

To: S. D. Hyman, Manager, Base Operations ESH&Q

From: P. B. Brannan, Manager, Base Operations Radiological Control

Subject: CLOSURE OF CORRECTIVE ACTION CC-04-01 FOR WRPS-PER-2009-0385.16

This memo documents the completion of corrective action CC-04-1 for WRPS-PER-2009-0385.16, concerning WRPS response to abnormal events surveillance S-09-ESQ-TANKFARM-003. Corrective action CC-04-01 requires Base Operations Radiological Control to schedule a minimum of two management observations a month, focusing on compliance to the TFRCM and implementation of 10 CFR 835, "Occupational Radiation Protection," and HNF-MP-5184, "Washington River Protection Solutions Radiation Protection Program (RPP)."

The table below identifies the schedule for these management observations, the assigned topic areas, and responsible personnel. Assigned personnel are expected to develop or use existing lines of inquiry based on the assigned radiological topic, and submit their write ups by the last working day of the assigned Month.

2009 RadCon MOPs Schedule	
Topic	Assignee
May 2009 MOPs	
Topic	**Assignee**
Radioactive Material Areas and Associated Posting and labeling	Grant Bachaud
Grab Air Sampling	Jim Dupaquier
June 2009 MOPs	
Radiological Release of Materials and Equipment	Bill Schaeppi
Radiological Posting	Brad Brannan
July 2009 MOPs	
High Radiation Physical Access Controls	Jeff Marks
Contamination Area Controls	Eric Bickel
August 2009 MOPs	
Radiological Work Permits	Jerry Welch
Radioactive Material Areas and Associated Posting and labeling	Dane Butler
September 2009 MOPs	
Grab Air Sampling	Scott Barrett
Radiological Release of Materials and Equipment	Steve Hathaway
October 2009 MOPs	
Radiological Posting	Arlo Holbrook
High Radiation Physical Access Controls	Jim Dupaquier
November 2009 MOPs	
Contamination Area Controls	Bill Schaeppi

Radiological Work Permits	Dane Butler
December 2009 MOPs	
Radioactive Material Areas and Associated Posting and labeling	Eric Bickel
Grab Air Sampling	Jerry Welch
2010 RadCon MOPs Schedule	
January 2010 MOPs	
Radiological Release of Materials and Equipment	Dane Butler
Radiological Posting	Scott Barrett
February 2010 MOPs	
High Radiation Physical Access Controls	Arlo Holbrook
Contamination Area Controls	Jim Dupaquier
March 2010 MOPs	
Radiological Work Permits	Bill Schaeppi
Radioactive Material Areas and Associated Posting and labeling	Steve Hathaway
April 2010 MOPs	
Grab Air Sampling	Jeff Marks
Radiological Release of Materials and Equipment	Eric Bickel
May 2010 MOPs	
Radiological Posting	Jerry Welch
High Radiation Physical Access Controls	Dane Butler
June 2010 MOPs	
Contamination Area Controls	Scott Barrett
Radiological Work Permits	Arlo Holbrook
July 2010 MOPs	
Radioactive Material Areas and Associated Posting and labeling	Jim Dupaquier
Grab Air Sampling	Bill Schaeppi
August 2010 MOPs	
Radiological Release of Materials and Equipment	Steve Hathaway
Radiological Posting	Jeff Marks
September 2010 MOPs	
High Radiation Physical Access Controls	Eric Bickel
Contamination Area Controls	Jerry Welch

If you have any questions concerning this schedule, please contact Jim Dupaquier of my staff on 372-2833.

JCD:VLK

cc: G. C. Bachaud
S. G. Barrett
E. E. Bickel
J. D. Butler
W. R. Cooper
J. E. Crockett
J. C. Dupaquier
S. L. Hathaway
A. R. Holbrook
L. B. Huddleston
T. S. Kimmel
K. J. Lawing
J. J. Marks
K. L. Meyer
D. W. Pattee
T. L. Pilling
W. C. Schaeppi
J. L. Welch
PBB File/LB

Task# WRPS-PER-2009-0385.17

E-STARS[R] Report
Task Detail Report
08/06/2009 1659

TASK INFORMATION			
Task#	WRPS-PER-2009-0385.17		
Subject	WRPS-PER-2009-0385; SIG; CA-05-01 Issue Lessons Learned bulletin emphasizing the importance of proper communication, contingency planning, response to		
Parent Task#	WRPS-PER-2009-0385	**Status**	CLOSED 06/01/2009
Reference	WRPS-PER-2009-0385	**Due**	06/04/2009
Originator	^PER CAs	**Priority**	Medium
Originator Phone		**Category**	PER
Origination Date	04/08/2009 1238	**Generic1**	None
Remote Task#		**Generic2**	None
Deliverable	PER Review	**Generic3**	None
Class	None	**View Permissions**	Global
Instructions	*No Instructions*		

ROUTING LISTS

1	Corrective Action	Inactive
	CA-05-01 Issue Lessons Learned bulletin emphasizing the importance of proper communication, contingency planning, response to vapors, and voluntary respirator use. Deliverable: Copy of issued bulletin. RESPONSIBLE MANAGER: When this corrective action is complete, enter a closure statement in E-STARS and close the E-STARS subtask. Refer to the Problem Evaluation Request procedure TFC-ESHQ-Q-C-C-01, Section 4.4 for closure documentation requirements	
	• Milliken, Nancy J - Assign - Completed with comments - 05/27/2009 0742 *Instructions:*	
	• Gregory, Rob - Review - Concur with comments - 06/01/2009 0812 *Instructions:*	
	• ^Independent Assessment Review - Review - Withdrawn - 04/16/2009 0754 *Instructions:* Independent Assessor Review	

ATTACHMENTS

Attachments	1. 0900518_09-ESQ-082_WRPS_-_[0903111137].pdf 2. 2009-0385.11 Additional Rosters.pdf 3. Concern 1 - Remedial CA, TFC-CHARTER-42.doc 4. Finding 1 - Remedial CA, Base Operations Shift Instructions 10-17-08.doc 5. Finding 1 - Remedial CA, EIR-2008-024.pdf 6. Finding 3 - Remedial CA, ATS-LO-200-110.doc 7. Finding 3 - Remedial CA, ERP-222S-009.doc 8. Finding 6 - Remedial CA, Course 35E001 ITEM Report.pdf 9. Link to PER 10. IB-09-039 ORP Surveillance-Response to Abnormal Events.pdf 11. RCA/CCA Report.pdf 12. SigPER 2009-0385.11 Support Docs.pdf

Task# WRPS-PER-2009-0385.17

COMMENTS			
Poster	Milliken, Nancy J - 05/27/2009 0742		
	Completed		
	Action complete. Lessons Learned attached. NJM 5/27/09		
Poster	Gregory, Rob (Mata, Beth L) - 06/01/2009 0812		
	Concur		
	Reviewed and concur with closure. BLM for REG		
Poster	^PER CAs (Steelman, Tracy L (inactive)) - 06/01/2009 1059		
	Steelman, Tracy L -- CLOSED		
	Reviewed and closed. tls 6/1/09		
TASK DUE DATE HISTORY			
Modified	04/08/2009 1238 - ^PER CAs	**New Due Date**	06/04/2009 0000
Modified	04/08/2009 1238 - ^PER CAs	**New Due Date**	03/19/2010 0000
SUB TASK HISTORY			
No Subtasks			

-- end of report --

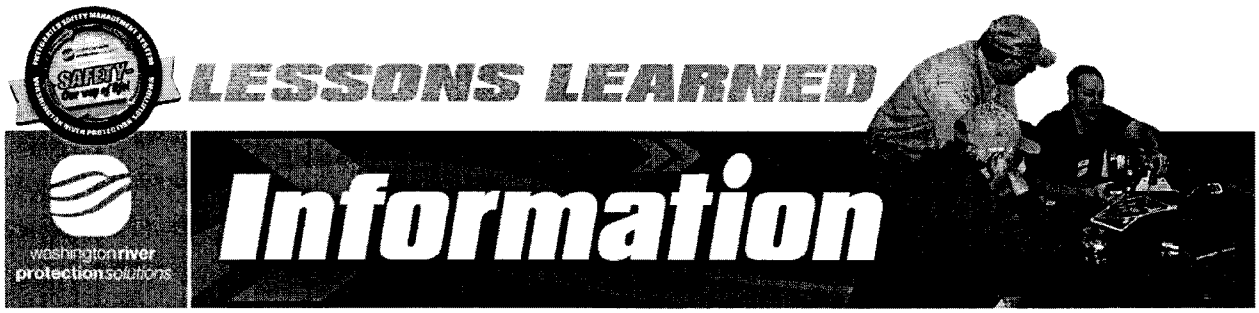

Date: May 26, 2009	http://tfc.rl.gov/rapidweb/chg/rppll/	**Number:** IB-09-039

Subject: Lessons Learned as a result of United States Department of Energy, Office of River Protection (ORP) surveillance, "Response to Abnormal Events."

Lessons Learned Statement: A surveillance was performed by ORP to review Washington River Protection Solutions LLC (WRPS) responses to indications of abnormal events since assuming responsibility for operation of the Tank Farms and 222-S Labs on October 1, 2008. The surveillance team found emergency response and conduct of operations deficiencies in which the Base Operations and 222-S Laboratory management team did not implement approved abnormal response procedures and processes following indications of abnormal operating conditions.

Actions taken during abnormal situations may inadvertently violate program requirements. Ensure compliance with applicable procedures when abnormal events occur.

Discussion of Activities: During the surveillance several instances were noted where operations managers and supervisory personnel believed informal actions were appropriate when responding to indications of abnormal operating conditions. In addition, Industrial Hygiene (IH) and Base Operations Radiological Control did not recommend or employ rigorous emergency response processes during these observed events to ensure adequate application of the core functions of integrated safety management. ORP was also concerned WRPS did not self-identify these deficiencies. Several of the events discussed in the report, including the 222-S contamination spread, the 702-AZ fluid spill, and the tank farm over-pressurization alarms had "fact- finding" meetings, but did not recognize the issues identified by ORP in this surveillance. No fact finding was held for the 204-AR personnel exposure event. Additionally, failures to control the area (via posting or access control) and failure to notify the Shift Office contributed to the event.

Analysis: A Root Cause Analysis (RCA) was performed individually for each of the six findings documented in the surveillance report. The individual RCAs were then evaluated using a Common Cause Analysis (CCA) approach to characterize symptoms of organization and programmatic issues as well as human errors.

During the performance of the RCA and the CCA, it was determined that WRPS needs to reestablish a culture committed to procedural compliance, conservative decision making, a questioning attitude, and effective communications.

1. **The Importance of Proper Communications.** It was determined there were several communication weaknesses including written communications content was less than

adequate and/or ambiguous in instruction and requirement, facts were incorrect and/or requirements were not correct or were incomplete or the situation was not covered. Clear concise communication is essential, whether written or verbal. When working in hazardous, difficult conditions, communication becomes paramount for ensuring the work is done correctly and efficiently.

2. **The Importance of Contingency Planning.** The results of this surveillance would indicate that the situations were underestimated and that incorrect assumptions were made based on past events and the reaction to those past events. There was a lack of recognition of the need to stop and evaluate the situation, a lack of conservative decision making, and a lack of questioning attitude.

   It is required that a contingency plan be developed and in place to lessen the potential impacts of emergency circumstances, and the plan must be implemented immediately in emergency circumstances. Contingency planning during the performance of work is important to ensure that work is performed safely and that procedure compliance is maintained.

3. **Response to Reported Odors or Unexpected Changes to Vapor Conditions.** Approved processes were not used to ensure employee and public safety and to prevent further potential unplanned employee exposures to tank vapors, tank waste, or other unsafe conditions, Conduct of Operations, Radiological Control and IH controls implemented during initial event response, and subsequent planned response actions for the 702-AZ spill were inadequate to prevent additional personnel exposures to tank vapors and tank ventilation condensate. The decision to send the responders into the spill area without Personal Protective Equipment was made with the assumption that the spill conditions were known even though a condensate sample and radiological surveys had not been performed. The lack of specific knowledge should have resulted in conservatively approaching the spill and treating the fluid as an unknown. Interviews with the two responding Radiological Control Technicians found they were not informed of odors in the room.

   The need to follow established processes, plan for uncertain conditions, and clarify any ambiguity in methods used to communicate is warranted. Never assume that the hazards are obvious or that the lack of hazards is obvious. Implement SWIM - **S**top, **W**arn, **I**solate, **M**itigate.

4. **Voluntary Respirator Use.** Several instances were found as a result of the surveillance to indicate that proper respiratory protection was not used in some situations.

   Workers should be encouraged to use and follow the Voluntary Respirator Use program. Respirators are an effective method of protection against designated hazards when properly selected and worn. Respirator use is encouraged, even when exposures are below the exposure limit, to provide an additional level of comfort and protection for workers.

HPI Error Precursors:

- Task Demands:
  - Irrecoverable acts
  - Interpretation of requirements
- Work Environment
  - Work Arounds
- Human Nature
  - Assumptions
  - Complacency / Overconfidence
  - Mind-set
  - Inaccurate risk perception
  - Mental shortcuts (biases)

ISMS Expectations:

- E1 – Perform all work safely using the five core functions of the ISMS system.
- E3 – Comply with procedures and any written instructions that define how to do the task. E4 – Demonstrate a questioning attitude.
- E11 – Adhere to Conduct of Operations requirements.
- M1 – Set, demonstrate and enforce high standards of ISMS performance with emphasis on safety, quality, mission progress, procedure compliance, and personal conduct.
- M2 – Maintain a safe work environment where employees feel free to raise issues without fear of reprisal.

Recommendations:

1. Face to face briefings are required to reiterate the importance of procedure compliance and formal communication.
2. Reinforce the need to foster a culture committed to a questioning attitude and conservative decision making.
3. Review/revise procedure, plans, etc. as necessary to strengthen clarity of direction and remove any ambiguity. Ensure tank farm personnel are aware of any changes made.
4. Convey the importance of assessing a situation for voluntary respirator use and inform and encourage the use of the voluntary respirator program.

References: WRPS-PER-2009-0385

Originator: N. Milliken, 376-7846

Distribution: Operations

Task# WRPS-PER-2009-0385.18

E-STARS[R] Report
Task Detail Report
08/06/2009 1700

TASK INFORMATION			
Task#	WRPS-PER-2009-0385.18		
Subject	WRPS-PER-2009-0385; SIG; CA-05-02 Evaluate compiling the IH responses provided in Finding S-09-ESQ-TANKFARM-003-F05 to increase the ease of informatio		
Parent Task#	WRPS-PER-2009-0385	**Status**	CLOSED 06/29/2009
Reference	WRPS-PER-2009-0385	**Due**	07/05/2009
Originator	^PER CAs	**Priority**	Medium
Originator Phone		**Category**	PER
Origination Date	04/08/2009 1238	**Generic1**	None
Remote Task#		**Generic2**	None
Deliverable	PER Review	**Generic3**	None
Class	None	**View Permissions**	Global
Instructions	*No Instructions*		

ROUTING LISTS		
1	Corrective Action	Inactive
	CA-05-02 Evaluate compiling the IH responses provided in Finding S-09-ESQ-TANKFARM-003-F05 to increase the ease of information retrieval. Incorporate information into current documents or develop new document (plan, procedure, etc.) to capture the information provided. Deliverable: Copy of new or revised document(s). RESPONSIBLE MANAGER: When this corrective action is complete, enter a closure statement in E-STARS and close the E-STARS subtask. Refer to the Problem Evaluation Request procedure TFC-ESHQ-Q-C-C-01, Section 4.4 for closure documentation requirements	
	• Jones, Mark W - Assign - Completed with comments - 06/24/2009 1557 *Instructions:*	
	• Gregory, Rob - Review - Concur with comments - 06/25/2009 1552 *Instructions:*	
	• Gregory, Rob - Review - Concur with comments - 06/29/2009 1043 *Instructions:* Return for rework. The evaluation states that the requirements are already defined in current procedures. The deliverable calls out for "Copy of new or revised documents." The attached evaluation is not adequate closure for this action. Please attach the referenced procedures. tls 6/30/09	
	• ^Independent Assessment Review - Review - Withdrawn - 04/16/2009 0754 *Instructions:* Independent Assessor Review	

ATTACHMENTS	
Attachments	1. 0900518_09-ESQ-082_WRPS_-_[0903111137].pdf 2. 2009-0385.11 Additional Rosters.pdf 3. Concern 1 - Remedial CA, TFC-CHARTER-42.doc 4. Finding 1 - Remedial CA, Base Operations Shift Instructions 10-17-08.doc 5. Finding 1 - Remedial CA, EIR-2008-024.pdf

Task# WRPS-PER-2009-0385.18

6. Finding 3 - Remedial CA, ATS-LO-200-110.doc
7. Finding 3 - Remedial CA, ERP-222S-009.doc
8. Finding 6 - Remedial CA, Course 35E001 ITEM Report.pdf
9. Link to PER
10. RCA/CCA Report.pdf
11. SigPER 2009-0385.11 Support Docs.pdf
12. WRPS-PER-2009-0385 18.pdf

COMMENTS

Poster	Jones, Mark W (Bowman, Tami A) - 06/24/2009 1557
	Completed
	Document links have been made on the Safety & Health Toolbox, evaluation is attached. Jones/Bowman 06/24/2009
Poster	Gregory, Rob - 06/25/2009 1552
	Concur
	I concur.
Poster	Gregory, Rob - 06/29/2009 1043
	Concur
	The evaluation determined that all requirements were currently contained in existing documents. There was no need to create a "new" or "revise" any docuements.
Poster	^PER CAs (Steelman, Tracy L (inactive)) - 06/29/2009 1047
	Steelman, Tracy L -- CLOSED
	Reviewed and closed. tls 6/30/09

TASK DUE DATE HISTORY

Modified	04/08/2009 1238 - ^PER CAs	**New Due Date**	07/05/2009 0000
Modified	04/08/2009 1238 - ^PER CAs	**New Due Date**	03/19/2010 0000

SUB TASK HISTORY

No Subtasks

-- end of report --

CA-05-02 Evaluate compiling the IH responses provided in Finding S-09-ESQ-TANKFARM-003-F05 to increase the ease of information retrieval. Incorporate information into current documents or develop new document (plan, procedure, etc.) to capture the information provided.

An evaluation was completed and the appropriate information from the technical documents is already embedded in the WRPS procedures.

During 702-AZ spill, two technical documents (RPP-RPT-24794, "Concentrations of Chemicals of Potential Concern in Water and Organic Condensate" and RPP-34147, "Tank Waste Dermal Exposure Assessment") were primarily used by the Chemical Hazard Assessor to conduct the exposure assessment for re-entry into the area to collect additional information/data. While this exposure assessment primarily used only two documents, some assessments could use multiple in-house technical documents and at times outside technical documents as reference information/data. Compiling all the technical information and data that could be used for conducting an exposure assessment into one document would result in a document that would be cumbersome and difficult to use.

However, making the individual documents more readily available could help with the exposure assessment process. RPP-34147, "Tank Waste Dermal Exposure Assessment" was already available on the WRPS Safety & Health web page and RPP-RPT-24794, "Concentrations of Chemicals of Potential Concern in Water and Organic Condensate" has since been added.

Task# WRPS-PER-2009-0385.19

E-STARS[R] Report
Task Detail Report
08/06/2009 1700

TASK INFORMATION			
Task#	WRPS-PER-2009-0385.19		
Subject	WRPS-PER-2009-0385; SIG; CA-06-01 Update course 350292 to include a discussion/demonstration of alarm response actions including AOPs, ARPs, and ERPs.		
Parent Task#	WRPS-PER-2009-0385	**Status**	Open
Reference	WRPS-PER-2009-0385	**Due**	09/04/2009
Originator	^PER CAs	**Priority**	Medium
Originator Phone		**Category**	PER
Origination Date	04/08/2009 1238	**Generic1**	None
Remote Task#		**Generic2**	None
Deliverable	PER Review	**Generic3**	None
Class	None	**View Permissions**	Global
Instructions	*No Instructions*		

ROUTING LISTS

1	Corrective Action	Active
	CA-06-01 Update course 350292 to include a discussion/demonstration of alarm response actions including AOPs, ARPs, and ERPs. Deliverable: Updated training course material. RESPONSIBLE MANAGER: When this corrective action is complete, enter a closure statement in E-STARS and close the E-STARS subtask. Refer to the Problem Evaluation Request procedure TFC-ESHQ-Q-C-C-01, Section 4.4 for closure documentation requirements	
	• Jones, Mark W - Assign - Awaiting Response - Due Date - 08/24/2009 0000 *Instructions:*	
	• Gregory, Rob - Review - Awaiting Response - Due Date - 08/28/2009 0000 *Instructions:*	
	• ^Independent Assessment Review - Review - Withdrawn - 04/16/2009 0754 *Instructions:* Independent Assessor Review	

ATTACHMENTS

Attachments

1. 0900518_09-ESQ-082_WRPS_-_[0903111137].pdf
2. 2009-0385.11 Additional Rosters.pdf
3. Concern 1 - Remedial CA, TFC-CHARTER-42.doc
4. Finding 1 - Remedial CA, Base Operations Shift Instructions 10-17-08.doc
5. Finding 1 - Remedial CA, EIR-2008-024.pdf
6. Finding 3 - Remedial CA, ATS-LO-200-110.doc
7. Finding 3 - Remedial CA, ERP-222S-009.doc
8. Finding 6 - Remedial CA, Course 35E001 ITEM Report.pdf
9. Link to PER
10. RCA/CCA Report.pdf
11. SigPER 2009-0385.11 Support Docs.pdf

COMMENTS

Task# WRPS-PER-2009-0385.19

No Comments

TASK DUE DATE HISTORY

Modified	04/08/2009 1238 - ^PER CAs	**New Due Date**	09/04/2009 0000
Modified	04/08/2009 1238 - ^PER CAs	**New Due Date**	03/19/2010 0000

SUB TASK HISTORY

Subtask#	WRPS-PER-2009-0385.19.1				
Subject	WRPS-PER-2009-0385; SIG; CA-06-01 Update course 350292 to include a discussion/demonstration of alarm response actions including AOPs, ARPs, and ERPs.				
Originator	Jones, Mark W (Bowman, Tami A)				
	Routing List	*No Active Routing List*			
Subtask#	WRPS-PER-2009-0385.19.2				
Subject	WRPS-PER-2009-0385; SIG; CA-06-01 Update course 350292 to include a discussion/demonstration of alarm response actions including AOPs, ARPs, and ERPs.				
Originator	Jones, Mark W (Bowman, Tami A)				
	Routing List	Route List			
		Assignee	Phillips, Jose	**Response**	

-- end of report --

Task# WRPS-PER-2009-0385.20

E-STARS[R] Report
Task Detail Report
08/06/2009 1701

TASK INFORMATION			
Task#	WRPS-PER-2009-0385.20		
Subject	WRPS-PER-2009-0385; SIG; EPA-01 Perform an end point assessment. 1. Review objective evidence from all corrective actions to ensure completeness a		
Parent Task#	WRPS-PER-2009-0385	**Status**	Open
Reference	WRPS-PER-2009-0385	**Due**	03/11/2010
Originator	^PER CAs	**Priority**	Medium
Originator Phone		**Category**	PER
Origination Date	04/08/2009 1238	**Generic1**	None
Remote Task#		**Generic2**	None
Deliverable	PER Review	**Generic3**	None
Class	None	**View Permissions**	Global
Instructions	*No Instructions*		

ROUTING LISTS

1	Corrective Action	Active

EPA-01 Perform an end point assessment.

1. Review objective evidence from all corrective actions to ensure completeness and adequacy.

2. Assess field operations for compliance to response requirements to abnormal operating conditions since January 2009.

-Review PER database for similar events.

-Review MOPs for similar events.

3. Interview selected operations personnel on changes in management expectations to determine extent of assimilation of corrective actions.

-Sample group should include (6) FLMs, (6) Shift Managers, (15) NCOs, (6) IHTs and (15) HPTs.

Deliverable: ESRB approved End Point Assessment Report.

RESPONSIBLE MANAGER: When this corrective action is complete, enter a closure statement in E-STARS and close the E-STARS subtask. Refer to the Problem Evaluation Request procedure TFC-ESHQ-Q-C-C-01, Section 4.4 for closure documentation requirements

Task# WRPS-PER-2009-0385.20

	• Milliken, Nancy J - Assign - Awaiting Response - Due Date - 02/28/2010 0000 *Instructions:*
	• Gregory, Rob - Review - Awaiting Response - Due Date - 03/04/2010 0000 *Instructions:*
	• ^Independent Assessment Review - Review - Withdrawn - 04/16/2009 0755 *Instructions:* Independent Assessor Review

ATTACHMENTS

Attachments	1. 0900518_09-ESQ-082_WRPS_-_[0903111137].pdf 2. 2009-0385.11 Additional Rosters.pdf 3. Concern 1 - Remedial CA, TFC-CHARTER-42.doc 4. Finding 1 - Remedial CA, Base Operations Shift Instructions 10-17-08.doc 5. Finding 1 - Remedial CA, EIR-2008-024.pdf 6. Finding 3 - Remedial CA, ATS-LO-200-110.doc 7. Finding 3 - Remedial CA, ERP-222S-009.doc 8. Finding 6 - Remedial CA, Course 35E001 ITEM Report.pdf 9. Link to PER 10. RCA/CCA Report.pdf 11. SigPER 2009-0385.11 Support Docs.pdf

COMMENTS

No Comments

TASK DUE DATE HISTORY

Modified	04/08/2009 1238 - ^PER CAs	**New Due Date**	03/11/2010 0000
Modified	04/08/2009 1238 - ^PER CAs	**New Due Date**	03/19/2010 0000

SUB TASK HISTORY

No Subtasks

-- end of report --

Save

Problem Evaluation Request (PER)

WRPS-PER-2009-0386
In Process/Work

PER No	Date of Discovery	Time of Discovery (24:00)	Project
WRPS-PER-2009-0386	03/11/2009	14:32	Base Ops

Location

OTHER

How Was Problem Discovered

DOE-ORP

Description of Concern or Problem

This PER was generated to document the results of a surveillance conducted by the U. S. Department of Energy, Office of River Protection (ORP) from October 1 through December 31, 2008. The purpose of the surveillance was to evaluate WRPS Response to Abnormal Events. The surveillance team found emergency response and Conduct of Operations deficiencies in which the Base Operations and 222-S Laboratory management team did not implement approved Abnormal Response Procedures and processes following indications of abnormal operating conditions. The surveillance yielded the following Observation:

Observation S-09-ESQ-TANKFARM-003-OO1 - RCT response to tank overpressurization is not in accordance with RCT-specific response training.

Requirement Not Satisfied	Source Document Number

Equipment Identification Number	System Identification

Immediate actions Taken or Planned

Initiated PER

Recommended Corrective actions

Resolve to ORP's satisfaction

Originator Contact

e-mail

Originators Name	Originators ID	Originators Phone	Date Initiated
Mata, Beth L	H0056284	(509) 373-0422	03/11/2009

SHIFT OPERATIONS REVIEW

Title

Results of DOE surveillance of WRPS Response to Abnormal Events

How Discovered	Agency
Externally Identified	DOE - Office of River Protection

Reportability	SSC Operability	Operability Review	Comp Measures Req
Non-Reportable	N/A	N/A	

Describe actions Taken or Recommended

No additional actions taken or recommended.

SO Reviewer Name	SO Reviewer ID	SO Reviewer Phone	SO Review Date
Higham, Dale B	H0078950	(509) 373-2689	03/11/2009

SCREENING

PER Significance Level	
PIE/CIM	

Independent Assessment Review	Occurrence Report Number	Externally Identified	
Yes		Yes	

Assigned Responsible Manager	Facilities Rep / SSO	Safety Management Rep	
Rolph, Jim T			

Program	Safety Management Program
• N/A	• Radiological Control

PER Screening Comments

See attached ORP Surveillance Report
See also WRPS-PER-2009-0385 (Significant PER)
cc: Lee Livesey, Eric Bickel, Don Wilson
(Nancy Brown 03/12/09)

RE-SCREEN REQUEST (Decline) -- Brannan, Patrick (Brad) (Bickel, Eric E) - 05/08/2009

This repsonse should be assigned to RadCon Programs. The ORP observation deals with a disconnect between current acceptable field practice and training. Therefore the training included in Course 351511 should be updated to reflect current practice. The updating of training is the responsibility of RadCon Program. The CTA for RadCon Training was contacted and concurred that this PER response should be assigned to RadCon programs.

Therefore, this response is declined and requested to be rescreened to RadCon Programs for resolution.

RE-SCREEN COMMENTS: Re-assign from Brad Brannan to Jim Rolph.
(Nancy Brown 05/12/09)

RE-SCREEN REQUEST (Prior to Launch): I will not accept PER-2009-0386 to be assigned to RadCon Programs. The referenced procedure was changed after DOE-ORP made their observations and findings. The changes to the procedure addressed the concerned raised by ORP, but did not include initiating changes to the training. By re-assigning this PER without capturing the changes made by the Program fails to capture the actions taken unless I'm missing something.
(Jim Rolph 05/13/09)

PER RE-SCREENING COMMENTS: Hold pending receipt of additional information.
(Nancy Brown 05/14/09)

PER SCREENING COMMENTS: Jim Rolph agreed to accept this PER.
(Nancy Brown 05/18/09)

Causal Code

MGT/Comm/Train	**Human Performance**	**GEMS**	**Equip/Eng/Other**
Failed Barrier	**ORPS Code**	**Functional Area**	**Work Process**
	Not Applicable	Radiation Protection	• Radiological Training
ISMS	**Consequence Code**		
Perform work within the controls	• Rad Training - Inadequate - Training provided, but content or delivery was inadequate		
PER Screening Chair	**PER Screening Chair ID**	**PER Screening Chair Phone**	**PER Screening Date**
Brown, Nancy L	H0088797	(509) 373-0992	03/12/2009

PAAA REVIEW

PAAA Screening	PAAA Codes	Function Codes	
PAAA, Non-NTS Reportable	• 10 CFR 830.122 (e)(1)	• Conduct of Operations (including Drills and Exercises)	
NTS Report Number	**NTS Report Date**		
Repetitive / Recurrent	**Programmatic**	**Intentional Violation / Misrepresentation**	

No	No	No	

PAAA Screening Comments

PAAA Reviewer Name	PAAA Review Date	
Anderson, Craig E	03/12/2009	
PAAA Approver Name	**PAAA Approve Date**	
Anderson, Craig E	03/13/2009	

SENIOR MANAGEMENT REVIEW/CONCURRENCE

TF Operations Morning Leadership Call

TF Operations Morning Leadership Call is no longer required.

Instructions for Responsible Manager

Evaluate suggestion, enter comments and required actions on PIE/CIM tab of the PER. Disposition in accordance with TFC-ESHQ-Q_C-C-01, Problem Evaluation Request.

Senior Management	Sr Mgmt ID	Sr Mgmt Phone	Sr Mgmt Review Date
Owen, Annette	H0054042	(509) 372-0533	03/13/2009

CAUSE ANALYSIS

Description of Occurrence

Extent of Condition

Safety Significance

Generic Implications

Remedial Corrective Action

Causal Analysis, Apparent Cause and/or Root Cause Analysis

PIE/CIM

Evaluation of PIE/CIM Initiative

ATTACHMENTS

0900518_09-ESQ-082_WRPS_-_[0903111137].pdf

Link to PER

Rescreen Request for WRPS-2009-0386.msg

TF-AOP-021.pdf

AUDIT HISTORY

Change Date	Auditor	Comments
03/13/2009 09:11	Owen, Annette	Responsible Manager Task Launched by Owen, Annette
05/11/2009 15:40	Brown, Nancy L	'PER Screening Comments' was changed.
05/12/2009 10:03	Brown, Nancy L	'Assigned Responsible Manager' was changed. 'PER Screening Comments' was changed.
05/13/2009 09:23	Brown, Nancy L	'PER Screening Comments' was changed.
05/14/2009 13:34	Brown, Nancy L	'PER Screening Comments' was changed.
05/18/2009 14:14	Brown, Nancy L	'PER Screening Comments' was changed.

-- End of Report --
07/09/2009 10:26 AM

Task# WRPS-PER-2009-0386

E-STARS[R] Report
Task Detail Report
07/09/2009 1026

TASK INFORMATION			
Task#	WRPS-PER-2009-0386		
Subject	PIE; Results of DOE surveillance of WRPS Response to Abnormal Events		
Parent Task#		**Status**	Open
Reference		**Due**	07/19/2009
Originator	^PER Coordinator	**Priority**	Medium
Originator Phone		**Category**	PER
Origination Date	03/11/2009 1444	**Generic1**	None
Remote Task#		**Generic2**	None
Deliverable	PER Review	**Generic3**	None
Class	None	**View Permissions**	Global
Instructions	*No Instructions*		

ROUTING LISTS

1	Responsible Manager	Active
	Evaluate suggestion, enter comments and required actions on PIE/CIM tab of the PER. Disposition in accordance with TFC-ESHQ-Q_C-C-01, Problem Evaluation Request.	
	• Brannan, Patrick (Brad) - Assign - Decline (Withdrawn) - 05/11/2009 1541 *Instructions:*	
	• Brannan, Patrick (Brad) - Assign - Withdrawn - 05/11/2009 1541 *Instructions:* Did you contact the originator about the PER? Document your contact in the response window.	
	• ^Independent Assessment Review - Review - Withdrawn - 05/11/2009 1541 *Instructions:* Independent Assessor Review	
	• ^PER Screening(Brown, Nancy L) - Review - Concur - 05/12/2009 1357 *Instructions:*	
	• ^Mgr Review - Review - Withdrawn - 05/13/2009 0923 *Instructions:*	
	• ^PER Screening(Brown, Nancy L) - Review - Concur - 05/18/2009 1414 *Instructions:*	
	• ^Mgr Review(Brown, Nancy L) - Review - Concur - 05/19/2009 0839 *Instructions:*	
	• Rolph, Jim T - Assign - Delegated - 05/28/2009 1535 *Instructions:* ↳ *Routing List:* Route List - Active *Instructions:* Lee please review PER and if correction action are warranted, let me know what they are so I can launch the corrective actions and close this PER, other wise evaluate and assist me in the proper course of action. • Livesey, Lee M - Assign - Delegated - 06/10/2009 1336 ↳ *Routing List:* Route List - Active *Instructions:* Provide analysis determining the reasons why personnel did not perform in accordance with the instructions contained in On-the Job-Training Card and Guide for Tank Farm Alarm Response,Course 351511, Revision 6.	

Task# WRPS-PER-2009-0386

	No issues with inaccuracies or deficiencies with the HPT training course have been identified since its revision in 2003 that would indicate revisions were needed to align with field practices. Determine whether revisions are required to the above referenced training materials and provide justification for changes to the Radiological Control Program for incorporation. Alternately, review Alarm Response Procedure and/or Abnormal Operating Procedures applicable to respond to overpressurization alarms for double shell tanks and revise expected responses to align with the expectations of course 351511. • Brannan, Patrick (Brad) - Assign - Awaiting Response	
2	Review Initial PER	Inactive
	Review New PER	
	• ^SO(Higham, Dale B) - Review - Concur - 03/11/2009 2027 *Instructions:*	
	• ^PER Screening(Brown, Nancy L) - Review - Concur - 03/12/2009 1414 *Instructions:*	
	• ^Mgr Review(Owen, Annette) - Review - Concur - 03/13/2009 0911 *Instructions:*	

ATTACHMENTS

Attachments	1. 0900518_09-ESQ-082_WRPS_-_[0903111137].pdf 2. Link to PER 3. Rescreen Request for WRPS-2009-0386.msg 4. TF-AOP-021.pdf

COMMENTS

Poster	Brannan, Patrick (Brad) (Bickel, Eric E) - 05/08/2009 0928
	Decline
	This repsonse should be assigned to RadCon Programs. The ORP observation deals with a disconnect between current acceptable field practice and training. Therefore the training included in Course 351511 should be updated to reflect current practice. The updating of training is the responsibility of RadCon Program. The CTA for RadCon Training was contacted and concurred that this PER response should be assigned to RadCon programs. Therefore, this response is declined and requested to be rescreened to RadCon Programs for resolution.

TASK DUE DATE HISTORY

Modified	05/19/2009 0841 - ^PER Coordinator (Brown, Nancy L)	**New Due Date**	07/19/2009 1630
Modified	03/13/2009 0911 - ^PER Coordinator	**New Due Date**	05/10/2009 1630
Modified	03/13/2009 0911 - ^PER Coordinator	**New Due Date**	05/14/2009 1630
Modified	03/11/2009 1444 - ^PER Coordinator	**New Due Date**	03/13/2009 1630

SUB TASK HISTORY

No Subtasks

-- end of report --

INCOMING CORRESPONDENCE COVERSHEET

CORR-2008-0049

Author	Addressee	Correspondence No.
J. C. Poniatowski/ORP	J. M. Armstead/WRPS	0900518 DOE-ORP: 09-ESQ-082

Subject: CONTRACT NO. DE-AC27-08RV14800 – WASHINGTON RIVER PROTECTION SOLUTIONS LLC (WRPS) RESPONSE TO ABNORMAL EVENTS SURVEILLANCE S-09-ESQ-TANKFARM-003

DISTRIBUTION

Washington River Protection Solutions
WRPS Correspondence Control
JC Allen-Floyd
JM Armstead
F Beranek
HS Berman
MN Brosee ((Assignee))
GJ Johnson
WJ Johnson
MA Lindholm
KJ Rueter
SM Sax
JM Shelt
BR Thomas

Priority:	**URGENT**
Assignee:	M. N. Brosee
Received:	March 11, 2009
Due Date:	3/25/2008 – Respond to the concern and findings as directed by ORP.

WRPS Correspondence Control
For Questions call: 376-0271
Outlook Address: ^WRPS Correspondence Control

U.S. Department of Energy
Office of River Protection
P.O. Box 450, MSIN H6-60
Richland, Washington 99352

MAR 11 2009

09-ESQ-082

0900518

Mr. Mike Armstead
Procurement Contracts Manager
Washington River Protection Solutions LLC
2440 Stevens Center Place
Richland, Washington 99354

Dear Mr. Armstead:

CONTRACT NO. DE-AC27-08RV14800 – WASHINGTON RIVER PROTECTION SOLUTIONS LLC (WRPS) RESPONSE TO ABNORMAL EVENTS SURVEILLANCE S-09-ESQ-TANKFARM-003

This letter forwards the results of a surveillance conducted by the U.S. Department of Energy, Office of River Protection (ORP) from October 1 through December 31, 2008, to evaluate WRPS Response to Abnormal Events. The surveillance team evaluated applicable procedures, examined records, made field observations, and conducted interviews of staff members to determine the adequacy and effectiveness of response to indications of abnormal events since WRPS assumed contractual obligations for operations on October 1, 2008.

The surveillance team found emergency response and conduct of operations deficiencies in which the Base Operations and 222-S Laboratory management team did not implement approved abnormal response procedures and processes following indications of abnormal operating conditions. One concern, six findings, and one observation were noted. The WRPS management team was previously briefed by ORP staff on the concern and findings on January 15, 2009.

Within 14 days of receipt of this letter, WRPS should respond to the concern and findings. The response should include:

- A formal root cause for the concern and the findings;
- The corrective actions that have been taken to control or remove any adverse impact from noncompliant conditions (remedial actions) and the results achieved;
- The corrective actions that will be taken to identify the extent of condition, correct the cause(s), and prevent further concerns and findings; and
- The date when all corrective actions will be completed, verified, and compliance to applicable requirements achieved.

RECEIVED
MAR 11 2009
WRPS
CORRESPONDENCE CONTROL

If you have any questions, please contact me, or your staff may contact Kenneth A. Hoar, Director, Verification and Confirmation Division, (509) 376-3567.

Sincerely,

Joseph C. Poniatowski
Contracting Officer

ESQ:JAA

Attachment

cc w/attach:
R. Jansons, PAC
G. M. McCann, PAC
W. Smoot, PAC
Y. Sherman, RL
WRPS Correspondence

Attachment
09-ESQ-082

MAR 1 1 20

S-09-ESQ-TANKFARM-003

Surveillance
of
Washington River Protection Solutions
Response to Abnormal Events

Table of Contents

Executive Summary: iii
Purpose: 1
Scope: 1
Surveillance Process: 1
Summary: 2
Concern, Findings, and Observation: 3
Conclusion: 20

Executive Summary:

This surveillance was performed to review Washington River Protection Solutions LLC (WRPS) responses to indications of abnormal events since assuming responsibility for operation of the Tank Farms and 222-S Labs on October 1, 2008. The surveillance team found emergency response and conduct of operations deficiencies in which the Base Operations and 222-S Laboratory management team did not implement approved abnormal response procedures and processes following indications of abnormal operating conditions.

The U.S. Department of Energy, Office of River Protection (ORP) is primarily concerned the Tank Operations Contract has not implemented a culture where management and supervisory personnel believe observed or reported abnormal indications, and provide protection to their workers and to equipment until the indications are either validated or proven wrong. Several instances were noted where Operations Managers and supervisory personnel believed informal actions were appropriate when responding to indications of abnormal operating conditions. In addition, Industrial Hygiene (IH) and Base Operations Radiological Control did not recommend or employ rigorous emergency response processes during these observed events to ensure adequate application of the core functions of integrated safety management.

ORP is also concerned WRPS did not self-identify these deficiencies. Several of the events discussed in this report, including the 222-S contamination spread, the 702-AZ fluid spill, and the tank farm over-pressurization alarms had "fact-finding" meetings, but did not recognize the issues identified by ORP in this surveillance. No fact finding was held for 204-AR failure to post and subsequent potential personnel exposure.

The surveillance resulted in one concern and six findings, listed below:

- **Concern S-09-ESQ-TANKFARM-003-C01** - Weakness in Emergency Response Program implementation is indicated based on several instances in which WRPS Base Operations and 222-S Laboratory management team did not implement approved abnormal response procedures following indications of abnormal operating conditions;

- **Finding S-09-ESQ-TANKFARM-003-F01** - Alarm Response procedures for Tank High Pressure alarm were not utilized for AW Tank Farm high pressure alarms as required;

- **Finding S-09-ESQ-TANKFARM-003-F02** – Abnormal Operating Procedure immediate actions were not taken for elevated airborne radioactivity levels identified during decontamination activities at the 204-AR decontamination facility;

- **Finding S-09-ESQ-TANKFARM-003-F03** – Immediate and follow-up actions contained in ERP-222S-009, "Spill/Release/Continuous Air Monitor Alarm," were not initiated or completed for a spill of radioactive material at 222-S laboratories;

- **Finding S-09-ESQ-TANKFARM-003-F04** – General Radiological Work Permits are inappropriately utilized for emergency response activities;

- **Finding S-09-ESQ-TANKFARM-003-F05** - Conduct of Operations, Radiological Control and IH controls implemented during initial event response, and subsequent planned response actions for the 702-AZ spill were not adequate to prevent additional personnel exposures to tank vapors and tank ventilation condensate; and

- **Finding S-09-ESQ-TANKFARM-003-F06** – IH Technicians have not been trained on response actions for tank over-pressure alarms.

Purpose:

The purpose of this surveillance was to review Washington River Protection Solutions LLC (WRPS) responses to indications of abnormal events since assuming responsibility for operation of the Tank Farms and 222-S Labs on October 1, 2008.

Scope:

The scope of the surveillance consisted of reviewing instances of WRPS management, supervisory and employee responses to abnormal indications. Included in this surveillance are the following instances:

- Indications of a loss of ventilation at AW Tank Farm on October 15, 2008;
- Indications of a loss of ventilation at AN Tank Farm on October 15, 2008;
- Indications of airborne radioactivity exceeding requirements for posting the area as an Airborne Radioactivity Area (188 DAC alpha) at 204-AR on November 17, 2008;
- Indications of a spread of radioactive material at 222-S Laboratories on November 21, 2008; and
- Indications of a liquid spill at 702-AZ on December 17, 2008.

Also included in the scope of the surveillance are reviews of response procedures, the WRPS drill and exercise program, and employee training for emergency response actions.

Surveillance Process:

Jason A. Armstrong, U.S. Department of Energy (DOE), Office of River Protection (ORP) conducted the surveillance as the Team Lead, with support from Rich L. Urie, DOE ORP and Rick S. Jansons, Project Assistance Corporation for DOE ORP. The surveillance was conducted in accordance with ESQ-OA-IP-01, "Integrated Assessment Program," Revision 1.

The review process included:

- Review of documents associated with the instances of indications of abnormal conditions;

- Attending WRPS fact-finding meetings, if any, associated with the instances of indications of abnormal conditions;

- Review of procedures and training materials related to employee response to indications of abnormal conditions;

- Interviews of WRPS management, supervisors, and employees; and

- Observation and walkdown of facilities, including 204-AR and 222-S Laboratory during response actions.

In addition, upon identification of a possible management concern, the team briefed the Tank Farms (TF) Operations Division Director and Assistant Manager TF. They, along with ORP Office of Environmental Safety and Quality (ESQ) management, agreed the findings indicated development of a management concern. The WRPS management team was subsequently briefed on the concern and findings on January 15, 2009.

Summary:

The surveillance team found emergency response and conduct of operations deficiencies in which the Base Operations and 222-S Laboratory management team did not implement approved abnormal response procedures and processes following indications of abnormal operating conditions. In some instances Operations Managers and supervisory personnel continued to believe informal actions were appropriate when responding to indications of abnormal operating conditions. In addition, support organizations such as Industrial Hygiene (IH) and Base Operations Radiological Control did not recommend or employ rigorous emergency response processes during these observed events to ensure adequate application of the core functions of integrated safety management.

ORP is primarily concerned the Tank Operations Contract (TOC) has not implemented a culture where management and supervisory personnel believe observed or reported abnormal indications, and provide protection to their workers and to equipment until the indications are either validated or proven wrong.

ORP is also concerned WRPS did not self-identify these deficiencies. Several of the events discussed in this report, including the 222-S contamination spread, the 702-AZ fluid spill, and the tank farm over-pressurization alarms had "fact-finding" meetings, but did not recognize the issues identified by ORP in this surveillance. No fact finding was held for 204-AR failure to post and subsequent potential personnel exposure.

It is important to note the activities in progress when the abnormal events occurred were medium or low risk routine activities. ORP did not identify any instances of improper event response for high radiological risk work activities. This may indicate complacency on the part of Base Operations Shift Management and Base Operations Radiological Control Management for the more routine, lower hazard work primarily conducted in their organization.

Concern, Findings, and Observation:

Concern S-09-ESQ-TANKFARM-003-C-01 - Weakness in Emergency Response Program implementation is indicated based on several instances in which WRPS Base Operations and 222-S Laboratory management team did not implement approved abnormal response procedures following indications of abnormal operating conditions.

Criteria:

The TOC demonstrates sufficient knowledge and procedures to properly respond to abnormal operating conditions.

Requirements:

- DOE O 151.1C, "Comprehensive Emergency Management System," Chapter I, 10, a, b, d, f, and g:

  "a. Develop, implement, maintain, and update, as necessary, an emergency management program, commensurate with the facility-specific hazards and consistent with Departmental directives and standards of performance.

  b. Prepare and maintain emergency plans, procedures, and technical resource capabilities that address emergency classification, notification, reporting, response actions, training and drills, exercises, emergency public information, outreach and coordination, accident investigation, and applicable Federal statutes, State and local laws, DOE Orders, and implementing regulations and guidance.

  d. Direct and/or support appropriate emergency response actions within the area under their control and at the scene of the emergency.

  f. Ensure the effectiveness of a continuing emergency preparedness program.

  g. Establish and maintain an internal assessment program to ensure the readiness of emergency response capabilities, including developing and conducting a self-assessment program, as well as establishing systems and measures to monitor and evaluate line performance."

Discussion:

Recent events (since October 1, 2008) at 222-S Laboratories, Building 204-AR, 702-AZ and several tank farms demonstrate emergency response and conduct of operations deficiencies in which the Base Operations and 222-S Laboratory management team did not implement approved abnormal response procedures and processes following indications of abnormal operating conditions. Based on ORP's surveillance, in these instances Operations Managers and supervisory personnel continued to believe informal actions were appropriate when responding to indications of abnormal operating conditions. In addition, support organizations such as IH and Base Operations Radiological Control did not recommend or employ rigorous emergency response processes during these observed events to ensure adequate application of the core functions of integrated safety management.

This approach by Operations management and their support organizations has resulted in incomplete hazard analysis, lack of required work reviews, deficient controls, and unnecessary worker exposure to potential radiological and chemical hazards when responding to the observed abnormal events.

ORP is primarily concerned the TOC has not implemented a culture where management and supervisory personnel believe observed or reported abnormal indications, and provide protection to their workers and to equipment until the indications are either validated or proven wrong. ORP is also concerned TOC employees do not have adequate knowledge, skills, abilities and attitudes to prevent recurrence of deficient response actions similar to previous tank farm events.

As identified in the findings referenced below and discussed in the report, required tank farm procedures and protocols were not utilized, including alarm and abnormal operating procedures, appropriate radiological work permits, recovery plans, and technical work documents for investigative surveys. Approved processes were not used to ensure employee and public safety and to prevent further potential unplanned employee exposures to tank vapors, tank waste, or other unsafe conditions.

Specific findings include:

- S-09-ESQ-TANKFARM-003-F01 – Alarm Response procedures for Tank High Pressure alarm were not utilized for AW Tank Farm high pressure alarms as required.

- S-09-ESQ-TANKFARM-003-F02 – Abnormal Operating Procedure immediate actions were not taken for elevated airborne radioactivity levels identified during decontamination activities at the 204-AR decontamination facility.

- S-09-ESQ-TANKFARM-003-F03 – Immediate and follow-up actions contained in ERP-222S-009, "Spill/Release/Continuous Air Monitor Alarm," were not initiated or completed for a spill of radioactive material at 222-S laboratories.

- As Low As Reasonably Achievable (ALARA) work planning documents for characterization and decontamination of an unanticipated spread of radioactive loose surface contamination within the laboratory did not address the potential for airborne contamination as required.

- Initial radiological investigative surveys of the 222-S Laboratory spill area were performed without a recovery plan or other technical work document and without appropriate approvals.

- The Job-Specific Radiological Work Permit governing 222-S Laboratory decontamination activities failed to include an anti-contamination hood as required.

- S-09-ESQ-TANKFARM-003-F04 – General Radiological Work Permits are inappropriately utilized for emergency response activities.

- S-09-ESQ-TANKFARM-003-F05 - Conduct of Operations, Radiological Control and IH controls implemented during initial event response, and subsequent planned response actions for the 702-AZ spill were inadequate to prevent additional personnel exposures to tank vapors and tank ventilation condensate.

- S-09-ESQ-TANKFARM-003-F06 – IH Technicians (IHT) have not been trained on response actions for tank over-pressure alarms.

ORP is concerned WRPS did not self-identify these deficiencies. Several of the events discussed in this report, including the 222-S contamination spread, the 702-AZ fluid spill, and the tank farm over-pressurization alarms had "fact-finding" meetings, but did not recognize the issues identified by ORP in this surveillance. No fact finding was held for 204-AR failure to post and subsequent potential personnel exposure.

Acceptable performance will be evident when the TOC institutes and demonstrates a management culture of believing observed or reported abnormal indications, utilizing and following Emergency Preparedness (EP) procedures, and providing protection to their workers and to equipment until the indications are either validated or proven wrong. Performance and processes will be critically examined to identify and correct problems to prevent recurrence. Personnel will be fully trained on expected immediate and follow-up actions, and sufficient EP drills will be conducted to further train, reinforce, and ensure understanding by personnel. These actions are vital to ensure a robust Integrated Safety Management System (ISMS) and Voluntary Protection Program (VPP) system.

The activities in progress when the abnormal events discussed above occurred were medium or low risk routine activities. The fact that operations management did not correctly respond to abnormal events indicates that pre-job planning and crew briefings were not adequate in anticipating potential abnormal events for the activity.

Finding S-09-ESQ-TANKFARM-003-F01 - Alarm Response procedures for Tank High Pressure alarm were not utilized for AW Tank Farm high pressure alarms as required.

Requirements:

- ARP-T-231-AUX, "Respond to Panel ANN-AUX Alarms at 271-AW," Rev/Mod E-7, Page 8, Fan Failure A & B Train Primary Exhauster, Step 4:
  - "INSPECT strip chart recorders AW271-WST-PR-111 through PR-116, located on alarm panel just below alarm windows in 271-AW to verify tank pressures are approximately 0 inches WG. This would indicate there is no ventilation on AW tanks."
- ARP-T-231-AUX, "Respond to Panel ANN-AUX Alarms at 271-AW," Rev/Mod E-7, Page 8, Fan Failure A & B Train Primary Exhauster, Step 8:
  - "IF HI RAD ALARM PRIMARY EXH STACK 'did not' annunciate, and if all tank vacuums have remained (and are presently) less than +0.2 inches WG, REQUEST permission from Shift Manager to perform the following;
    - ENTER farm, AND INVESTIGATE cause of shutdown.
    - ATTEMPT to RESTART primary ventilation system per TO-060-104."
- ARP-T-231-AUX, "Respond to Panel ANN-AUX Alarms at 271-AW," Rev/Mod E-7, Page 8, Fan Failure A & B Train Primary Exhauster, Step 10:
  - "If any tank pressures have exceeded or presently exceed +0.2 psig, RESPOND per appropriate alarm response procedure for High Pressure alarm (panels ANN-101 through ANN-106, Alarm 02, HI PRESSURE TANK 10X (LOW VACUUM), (WST-PAH-11X))."
- ARP-T-231-00106, "Respond to Panel ANN-106 Alarms at 271-AW," Rev/Mod F-0, Page 5, Note:
  - "When the exhaust system is shut down, it is expected that tank pressure will go to zero. Pressure fluctuations of greater than plus or minus 0.2 inches WH indicate unstable conditions."

    "The following readings (from Steps [4] and [5], taken from the 241-AW-271 building and Tank Monitoring and Control System (TMACS), are used in Step [8] to determine if tank conditions are unstable (i.e., symptoms of a tank pressurization and/or gas release event)."

- ARP-T-231-00106, "Respond to Panel ANN-106 Alarms at 271-AW," Rev/Mod F-0, Page 5, Immediate Action Step 4:
  - "CHECK pressure strip chart recorders for each tank, AW271-WST-PR-1111 through AW271-WST-PR-116, located on alarm panel just below alarm windows (red colored traces) to see if tank pressures have exceeded +0.2 inches WG or if there are fluctuations greater than plus or minus 0.2 inches WG."
- ARP-T-231-00106, "Respond to Panel ANN-106 Alarms at 271-AW," Rev/Mod F-0, Page 5, Immediate Action Step 7:
  - "NOTIFY Shift Manager of conductions AND REQUEST the following: Health Physics/Industrial Hygiene support."
- ARP-T-231-00106, "Respond to Panel ANN-106 Alarms at 271-AW," Rev/Mod F-0, Page 5, Immediate Action Step 8:
  - "IF the tank parameters indicate unstable conditions (meets the criteria listed above), Health Physics Technician (HPT), Industrial Hygiene Technician and Operator DON appropriate personal protective equipment (self contained breathing apparatus (SCBA) and one set of protective clothing)."
- ARP-T-231-00106, "Respond to Panel ANN-106 Alarms at 271-AW," Rev/Mod F-0, Page 5, Immediate Action Step 13:
  - "Health Physics Technician and Industrial Hygiene Technician PERFORM assessments for radioactivity, ammonia and organics in the farm."

Discussion:

Based on review of operating logs, pressure recorder charts, and discussion with shift management personnel, ORP determined that ventilation was lost at AW Farm on October 15, 2008. During the ventilation loss event, at least three tank pressures were positive for approximately an hour, with Tank 106 indicating +0.5 inches WG for that period. Although tank pressures exceeded +0.2 inches WG, immediate actions to address the abnormal condition were not conducted in accordance with the appropriate alarm response procedure for High Pressure alarm as required by ARP-T-231-AUX, "Respond to Panel ANN-AUX Alarms at 271-AW," Rev/Mod E-7, Page 8, Fan Failure A & B Train Primary Exhauster, Step 10.

Instead of responding per the alarm response procedure, the shift manager directed a Nuclear Chemical Operator (NCO) and an IHT to perform a sweep of the farm in the late afternoon of October 15, 2008. The NCO and IHT wore Self Contained Breathing Apparatus (SCBA), but did not wear anti-contamination clothing. The ventilation was restarted, and the farm was returned to normal operations. Contrary to the procedure

requirements, a sweep of the farm by a Radiological Control Technician (RCT) was not conducted prior to restoring normal access to the farm.

Subsequent to these events, an RCT was assigned by the shift manager to perform a sweep of the farm on October 16, 2008. The sweep was conducted during the afternoon of October 16, 2008, without respiratory protection or anti-contamination clothing.

Finding S-09-ESQ-TANKFARM-003-F02 – Abnormal Operating Procedure immediate actions were not taken for elevated airborne radioactivity levels identified during decontamination activities at the 204-AR decontamination facility.

Requirements:

- TF-AOP-003,"Response to Elevated Airborne Radioactivity," Revision B-8, Step 2.2 states:

  "Report that a building or breathing air CAM, portable air sampler, or grab air sample is indicating or trending above normal or exceeds established limits or alarm set points."

- TF-AOP-003, "Response to Elevated Airborne Radioactivity," Revision B-8, Step 3.2.3 requires the following Immediate Actions if a portable air sample, or grab air sample exceeds established limits:

  1. IMMEDIATELY stop work and evacuate personnel from the area.

  2. ENSURE area has been isolated or a boundary established to minimize exposure. Items to consider include, but are not limited to the following: all accesses are posted as an airborne radioactivity area as applicable.

  3. NOTIFY Radiological Control to perform the following as necessary: perform whole body surveys and nasal/mouth smears as appropriate for exposed personnel.

  4. CONTACT RCT to enter area with appropriate Personal Protective Equipment (PPE) and check for source of contamination.

Discussion:

On November 17, 2008, WRPS work crews in 204-AR were performing decontamination activities on a camera used for in-tank viewing. The camera was enclosed in a glove bag, and a breathing air sample to validate the integrity of the containment was taken. A field count of the air sample on November 17, 2008, at the work site found indications of airborne radioactivity exceeding requirements for posting the area as an Airborne Radioactivity Area (188 DAC alpha). This information was conveyed to the Radiological Control First Line Supervisor.

Contrary to the requirements of procedure TF-AOP-003, "Response to Elevated Airborne Radioactivity," review of logbooks and interviews with Radiological Control and Operations personnel found no immediate actions were performed, including:

- the area was not posted as an Airborne Radioactivity Area or controlled;
- nasal/mouth smears were not performed; and
- no entry was made to check for the source of contamination.

On November 18, 2008, a WRPS RCT was assigned to perform daily required surveillances without respiratory protection in the work area that should have been posted and controlled as an Airborne Radioactivity Area. After completing her surveillance, she was informed of the air sample results from the previous day. She requested and received in vitro analysis and a whole body count. The area was subsequently posted as an Airborne Radioactivity Area. However, during a walk down of the facility on November 19, 2008, ORP ESQ personnel found one access, the garage door into the work area, was still not posted as an ARA as required.

Subsequent discussion with WRPS Radiological Control personnel found the supervisor assumed the cause to be radon progeny and did not take into account additional source term present in the 204-AR facility upon finding indications of airborne radioactivity on a grab air sample. No decay counts were performed in the first 19 hours to validate the supervisor's assumption.

Back up air samples to discriminate the radon using a Staplex sampler with Annular Kinetic Impactor head were not taken, nor was the original sample taken to the counting laboratory for immediate isotopic analysis. Both of these actions would have helped the supervisor make an educated decision to down post the area if it had been correctly posted in accordance with TF-AOP-003.

Finding S-09-ESQ-TANKFARM-003-F03 – Immediate and follow-up actions contained in ERP-222S-009, "Spill/Release/Continuous Air Monitor Alarm," were not initiated or completed for a spill of radioactive material at 222-S laboratories.

Requirements:

- ERP-222S-009, "Spill/Release/Continuous Air Monitor Alarm," Rev/Change No. H-0, Section 1.0:

  "A spill or release of hazardous/radiological material occurs, OR contamination spread has been identified during operations, radiological surveillance, continuous air monitor (CAM) alarm, PCM2 alarm, or self-survey."

- ERP-222S-009, "Spill/Release/Continuous Air Monitor Alarm," Rev/Change No. H-0, Section 2.1:

  "STOP work and PLACE the area in a safe configuration."

- ERP-222S-009, "Spill/Release/Continuous Air Monitor Alarm," Rev/Change No. H-0, Section 3.1.15:

  "ENSURE the spill or release is stopped/contained."

- ERP-222S-009, "Spill/Release/Continuous Air Monitor Alarm," Rev/Change No. H-0, Section 3.1.16:

  "DETERMINE the cause or source of the spill."

- TOC-ESHQ-RP_RWP-C-03, "ALARA Work Planning," Revision L-2, Section 4.3.3, Airborne Radioactivity Control Considerations, in part:

  "The following operations have the potential to generate airborne radioactivity when accomplished on surfaces with removable or fixed contamination: decontamination."

- TOC-ESHQ-RP_RWP-C-03, "ALARA Work Planning," Revision L-2, Attachment C, Step 4:

  "Document the method and results of the calculation of potential airborne radioactivity concentration on the ALARA Management Worksheet (AMW) (A-6003-904)."

- TOC-ESHQ-RP_RWP-C-03, "ALARA Work Planning," Revision L-2, Attachment C, Steps 5 and 6:

  "When removable contamination values (representative of work surfaces) are available, estimate the airborne radioactivity concentration with the following equation: $C = R\ S_c\ (4.5E\text{-}07\ uCi/dpm)/C_F$"

- TOC-ESHQ-RP_C-03, "ALARA Work Planning," Revision L-2, Section 4.1:

  "Radiological investigative or characterization surveys, performed exclusively to establish radiological conditions of a work area or location, are not considered "work" requiring a work plan, provided that the following activities are <u>not</u> performed:

  - Changing or manipulating plant-installed systems or component(s), i.e., valve manipulation; manipulating or disassembling equipment; opening or closing a system or component other than hinged access doors/covers; bolting/unbolting, welding, hoisting or rigging; fabrication, removing fasteners; connecting

instrumentation to equipment or components; **decontamination**; shielding radiological sources to reduce dose rates; or excavation.

When the radiological investigative or characterization survey does not require any of the items listed above, it is recommended that the activity be performed using a survey plan, task, or routine, as appropriate, in conjunction with the applicable AMW and Radiological Work Permit based on the criteria established in this procedure. **The appropriate approval process must be applied based on the risk level assigned (e.g., high risk work must be approved via the ALARA joint review group process).**" (Applicable sections bolded for emphasis.)

- TOC-ESHQ-RP_RWP-C-04, "Radiological Work Permits," Revision D-18, Attachment A states, in part,

  "For work performed inside of buildings, PPE hoods should be required when performing work with potential for overhead contamination."

Discussion:

At approximately 1500 hours on November 21, 2008, a Chemical Technician Manager was found with approximately 8,000 to 10,000 dpm/100 cm^2 beta-gamma and less than detectable alpha loose contamination on his anti-contamination shoe covers while exiting the posted Contamination Area at 222-S Laboratory. A responding RCT found approximately 8,000 to 10,000 dpm/100 cm^2 beta-gamma and less than detectable alpha loose contamination on the floor in the area where the Chemical Technician Manager had traversed. These work areas, although posted as Contamination Areas, are normally maintained free of loose contamination

Facility management allowed routine surveillances using General Radiological Work Permits to continue over the weekend (November 21 through 23, 2008). Personnel conducting routine surveillances used a "smear and clear" method of entry into the contaminated area. Contamination levels of 8,000 to 10,000 dpm/100 cm^2 beta-gamma and less than detectable alpha loose contamination were found throughout the facility, including lab rooms and hallways normally maintained free of loose contamination. On Saturday, November 22, 2008, 150,000 dpm loose beta-gamma contamination was found on computer labels on a cart in Room 2B. Workers and Radiological Control supervision did not consider the General Radiological Work Permits to be voided, because the levels of contamination exceeding the 20,000 dpm/100 cm^2 void limit found to date were not "general area" and were only present in specific locations in Room 2B.

On Sunday, November 23, 2008, personnel were called out on overtime to survey and decontaminate additional portions of the lab. In general, reported contamination levels remained at approximately 8,000 to 10,000 dpm/100 cm^2 beta-gamma and less than detectable alpha loose contamination throughout the facility. However, upon entering

Room 2B, the workers found 50k dpm/LAW in the middle of the room in 2B2, and 25K dpm/100 cm^2 on the floor around hood 2.

Contrary to the 222-S Laboratory spill response procedure, after a contamination spread was identified, work (routine surveillances) was allowed to continue over the weekend (November 21 through 23, 2008) without stopping the spill or determining the cause or source of the spill. (Note: the source or cause has not yet been determined.) Not until November 25, 2008, was a Recovery Plan developed and implemented. In addition to the failure to take immediate actions, the following deficiencies were identified with respect to the spill recovery:

1. **ALARA work planning documents for characterization and decontamination of an unanticipated spread of radioactive loose surface contamination within the laboratory did not address the potential for airborne contamination as required.**

   Procedure TOC-ESHQ-RP_RWP-C-03, "ALARA Work Planning," Revision L-2, Section 4.3.3, Airborne Radioactivity Control Considerations, states, in part, "The following operations have the potential to generate airborne radioactivity when accomplished on surfaces with removable or fixed contamination: decontamination." In this case, a review of the AMW AW-1514-S, and Recovery Plan RP 2008-05, used for investigative surveys and spill response at 222-S Labs, found no methods of determining the amount of potential airborne radioactivity were used in planning the work, resulting in incorrect decisions to take no air samples or prescribe the use of respiratory protection for workers performing decontamination activities.

   Contrary to Step 4 of Attachment C, the method and results of the calculation of the potential airborne radioactivity concentration were not documented on the ALARA Management Worksheet. Instead, Part III.A of the AMW, "Method of Determining Airborne," only states, "Contamination levels and work activity should not cause an airborne problem."

   Additionally, no discussion or explanation was provided in the AMW identifying this as an investigative survey of a spill with an unknown source of contamination and unknown levels of contamination. The AMW, Part IV, Data Reliability, did not identify the unknown contamination levels. Instead, the AMW stated reliable radiological survey data was available for planning purposes and referenced Survey Report S259667, with a maximum identified contamination level of 50,000 dpm/LAW beta-gamma removable. Other Survey Reports were available to the planners, including S259670 with contamination levels up to 100,000 dpm/LAW beta-gamma removable. Neither of the survey reports quantified the contamination levels in units of dpm/100 cm^2. There was no recognition in the AMW that the contamination levels and airborne hazards were not fully known.

2. **Initial radiological investigative surveys of the 222-S Laboratory spill area were performed without a recovery plan or other technical work document and without appropriate approvals.**

   Contrary to the requirements of TOC-ESHQ-RP_C-03, "ALARA Work Planning," Revision L-2, Section 4.1, radiological investigative survey activities and associated decontamination were conducted at 222-S Laboratories from November 21 through November 25, 2008, without generating a recovery plan or other technical work document, assigning a risk level or receiving the appropriate management approvals. This approach resulted in incomplete hazard analysis, lack of required work reviews, and potentially deficient controls.

3. **The Job-Specific Radiological Work Permit governing 222-S Laboratory decontamination activities failed to include an anti-contamination hood as required.**

   Observation of decontamination activities in Room 2B, interviews with RCTs and RCT Supervisors, and review of survey documentation found surveys and decontamination activities were planned and conducted above the heads of workers. Contrary to the requirements of TOC-ESHQ-RP_RWP-C-04, "Radiological Work Permits," Attachment A, a review of Job-Specific Radiological Work Permit S-715, Revision 0, found anti-contamination hoods were not specified to be worn by workers performing decontamination activities. A review of the associated AMW (AW-1514-S) and Recovery Plan (RP 2008-005) found no limitations or exclusions on performing overhead work.

Finding S-09-ESQ-TANKFARM-003-F04 – General Radiological Work Permits are inappropriately utilized for emergency response activities.

Requirements:

- The Tank Farm Radiological Control Manual, HNF-5183, Article 322.2 and 322.3 state, in part:

  "Job-Specific RWPs should be used to control non-routine operations or work in areas with changing radiological conditions.

  General RWPs may be used to control routine or repetitive activities, such as tours and inspections or minor work activities, in areas with well characterized and stable radiological conditions."

Discussion:

The Tank Farm Radiological Control Manual requires job-specific Radiological Work Permits (RWP) be used to control non-routine operations or work in areas with changing radiological conditions. General RWPs may only be used to control routine or repetitive activities, such as tours and inspections or minor work activities, in areas with well

characterized and stable radiological conditions. Contrary to these requirements, several instances were noted where General RWPs were used to control non-routine operations.

1. Loss of ventilation with high tank pressure alarms occurred at AN Farm on October 15, 2008, and at AW Farm on October 15, 2008. In both cases, the responding personnel utilized RWP TF-001, Revision 44, which is a General RWP limited to work under known, stable radiological conditions.

2. A contamination spread occurred at 222-S Laboratories on November 21, 2008. Investigative surveys to determine the levels, extent, and source of the contamination spread were conducted from November 21 through November 24, 2008, using General RWPs S-521, Revision 012, and S-602, Revision 012. General RWP S-521 does not authorize contamination surveys or decontamination activities, but only allows routine surveillance work and other routine activities.

The purpose of the RCT's response in each of these three events is to survey for changing radiological conditions. By definition, these activities cannot be controlled by a General RWP. In addition, as noted in Finding S-09-ESQ-TANKFARM-003-F03, the work was conducted without generating a recovery plan or other technical work document.

Finding S-09-ESQ-TANKFARM-003-F05 - Conduct of Operations, Radiological Control and IH controls implemented during initial event response, and subsequent planned response actions for the 702-AZ spill were not adequate to prevent additional personnel exposures to tank vapors and tank ventilation condensate.

Requirements:

- 29 CFR 1910.120(f)2(ii):

  "For employees covered under paragraph (f)(2)(iii) and for all employees including of employers covered by paragraph (a)(1)(iv) who may have been injured, received a health impairment, developed signs or symptoms which may have resulted from exposure to hazardous substances resulting from an emergency incident, or exposed during an emergency incident to hazardous substances at concentrations above the permissible exposure limits or the published exposure levels without the necessary personal protective equipment being used:

  Content of medical examinations and consultations: 1910.120(f)(4)(i): Medical examinations required by paragraph (f)(3) of this section shall include a medical and work history (or updated history if one is in the employee's file) with special emphasis on symptoms related to the handling of hazardous substances and health hazards..."

- 29 CFR 1910.120(p)(8)(ii) and (iii), in part:

  "Elements of an emergency response plan. The employer shall develop an emergency response plan for emergencies which shall address, as a minimum, the following areas to the extent that they are not addressed in any specific program required in this paragraph:

  - Emergency recognition and prevention.
  - Decontamination procedures.
  - Emergency medical treatment and first aid.
  - Emergency alerting and response procedures.
  - Critique of response and follow-up.
  - PPE and emergency equipment.

  Training for emergency response employees shall be completed before they are called upon to perform in real emergencies. Such training shall include the elements of the emergency response plan, standard operating procedures the employer has established for the job, the personal protective equipment to be worn and procedures for handling emergency incidents."

- 29 CFR 1910.132 (d), in part:

  "The employer shall assess the workplace to determine if hazards are present, or are likely to be present, which necessitate the use of personal protective equipment (PPE). If such hazards are present, or likely to be present, the employer shall:

  - Select, and have each affected employee use, the types of PPE that will protect the affected employee from the hazards identified in the hazard assessment;
  - Communicate selection decisions to each affected employee; and,
  - Select PPE that properly fits each affected employee.

  The employer shall verify that the required workplace hazard assessment has been performed through a written certification that identifies the workplace evaluated; the person certifying that the evaluation has been performed; the date(s) of the hazard assessment; and, which identifies the document as a certification of hazard assessment."

- RPP-34147, "Tank Waste Dermal Exposure Assessment," Revision 0. The report calls for personal protective equipment for operations on tank ventilation systems, and spells out those chemicals of concern in condensate.

- RPP-27195 "Personal Protective Equipment," Revision B-12 (4.1) states "Protection is required where there is a potential for hand injury due to exposure to such hazards as: skin absorption of harmful substances..."

- TFC-ESHQ-IH-STD-10 "Industrial Hygiene Response to Employee Contact with Chemical Waste," states, "All hazard and facility/area information will be provided to the Occupational Medicine Contractor and the shift manager."

- TF-AOP-011, "Response to Chemical and/or Radiological Events," Rev/Mod C-2.

Discussion:

On December 17, 2008, a qualified Field Work Supervisor (FWS) and supporting crew were assigned to perform the air flow testing of tank exhaust on the downstream side of the A and B train HEPA filters. Four members of the work crew (IHT, RCT and two V&B personnel) were stationed in the CAM room to actually perform the test, and the remaining two personnel (NCO and FWS) were stationed to guard the two doors into the CAM room during testing. The work crew in the room donned SCBA and performed a portion of the work without incident. Upon removal of a lower testing port cover, approximately 1 quart of fluid spilled from the port "like a faucet" according to the V&B personnel. The cap was replaced.

The IHT was monitoring for Volatile Organic Compounds (VOC) and ammonia, with area results reported below detection limits. It is noteworthy that the work instruction, #111243, also identified action levels for formaldehyde, which was not addressed in the air monitoring regime. ORP has since confirmed that formaldehyde was not a Chemicals of Potential Concern (COPC) for this task, but mistakenly listed. The RCT surveyed the glove of the V&B person and the spill area and found no contamination. The work crew removed their SCBAs and called in the two team members guarding the doors. The FWS determined the fluid to be a spill, and notified Base Operations Shift Manager (BOSM) at 1350.

The BOSM entered TF-AOP-011, "Response to Chemical and/or Radiological Events," Rev/Mod C-2. At 1400, the BOSM logged a call to 911, and requested no response. At 1405, the six team members at the spill site were sent to AdvanceMed Hanford (AMH) for medical evaluation. The NCO and Operations Engineer at the scene controlled access to the spill area. At 1415, the doors to the spill area were posted, "No entry without shift manager's authorization." No specific contaminate information was provided to AMH in conjunction with the reporting individuals.

Subsequently, the BOSM directed a team to re-enter the spill area to monitor the air for VOC and ammonia, take an air sample in a Tedlar bag, take a fluid sample for chemical analysis, and perform radiological surveys. The re-entry team was not directed to (and did not) wear any anti-contamination clothing or utilize respiratory protection. The two RCTs assigned to the re-entry team reported a "funny, wet metal" smell in the outer room and the RCTs immediately exited the building. The IHT entered the inner room (spill area) for approximately two additional minutes to collect the tedlar air sample. The fluid sample and radiological surveys were not performed. The spilled fluid has reportedly since evaporated.

Approximately 24 hours after the spill occurred, a fact finding was held by WRPS. Neither a fluid sample nor radiological surveys of the spill area had been performed at the time of the fact-finding. Improper response issues identified by ORP but not determined by the WRPS fact-finding include:

1. Contrary to Radiological Worker II training, workers did not perform SWIMS immediate actions, but instead removed their respiratory protection in the spill and called two individuals who were outside the spill area into the room rather than minimizing their exposure by exiting the room.

2. An Incident Command Post was not established, and a formal process or plan was not initiated to ensure personnel responding to the spill were adequately protected. Two responding RCTs who were not required to wear respiratory protection reported symptoms and were sent to AMH for evaluation.

3. The decision to send the responders into the spill area without PPE was made with the assumption that the spill conditions were known even though a condensate sample and radiological surveys had not been performed. The lack of specific knowledge should have resulted in conservatively approaching the spill and treating the fluid as an unknown. Interviews with the two responding RCTs found they were not informed of odors in the room.

4. The BOSM concluded that the conditions for exiting TF-AOP-011 were to identify and control the area. The procedure states the termination/exit criteria to be: "Radiological and/or chemical event has been stabilized, hazards fully identified and controlled, and all affected personnel notified." The BOSM, in interviews with the ORP personnel indicated that the phrase did not require him to characterize the spill or know any of the spill constituents, but only to "identify" a spill. This is an erroneous, non-conservative interpretation of the procedure requirements. Such an assumption fails the intent of performance in the execution of 29 CFR 1910.120(p)(8)(ii) and (iii).

5. The IH involved in planning the re-entry did not address the risk assessment and PPE selection process per 29 CFR 1910.132 (d) and failed to plan for the presence of dermal hazards as identified in RPP-RPT-24794, "Concentrations of Chemicals of Potential Concern in Water and Organic Condensates," Revision 1. This study provides a list of COPC and associated concentrations found in concentrate. It is intended to be utilized in conjunction with RPP-34147, "Tank Waste Dermal Exposure Assessment," Revision 0, and TOC-ESHQ-S_IS-C-02, "Personal Protective Equipment," in the consideration and selection of chemical protective clothing.

6. When workers were transported to AMH for evaluation, the chemicals of concern in the condensate should have been shared with workers in accordance with ISMS principles, and reported to the clinic for the eight employees eventually sent to AMH for evaluation per industry standards and 29 CFR 1910.120(f)(ii). To date, this action has not occurred.

7. The lack of proper response to the spill during the work activity indicates that potential abnormal events and expected actions were not planned for or discussed during pre-job briefings.

In addition, the following response and IH programmatic questions were not addressed during the fact-finding, and although requested by ORP staff, have not been addressed to date:

1. the justification for the choice of limited IH instrumentation data and conclusions drawn;

2. lack of condensate characterization (the product was neither sampled, nor was the condensate characterization report consulted);

3. absence of correspondence with AMH regarding possible cutaneous absorbed agents (or lack of);

4. failure to evaluate protective gloves via internal moisture and headspace analysis for semi-volatile compounds that may have permeated (or simple conclusive evidence that no such compounds were present); and

5. what, if any vapor suppressant should be used on tank waste spills and the technical rationale for the conclusions.

Finding S-09-ESQ-TANKFARM-003-F06 – IHTs have not been trained on response actions for tank over-pressure alarms.

Requirements:

- DOE Order 5480.20A, Chapter IV, 4.a.(2)(a) states:

  "The Training Program shall include the following: On-the-job and classroom-type training to ensure that personnel are familiar with all aspects of their positions. Such training shall include but not be limited to:
  (a) Normal and emergency procedures."

Discussion:

A review of procedure TOC-BSM-TQ-STD-07, IHT Training and Qualification Requirements, Revision C, found no requirement to conduct training on emergency procedures or IHT response actions to abnormal events. In addition, a review of the Qualification Card for TOC IHT, Course 350292, Revision 0608.1, found no training on abnormal or emergency procedures or response actions.

Course 35E001, TOC Emergency Response Organization Facility Specific Initial Training, is provided to IHs and on-shift IHTs. However, a review of the training material associated with this course found comprehensive training of emergency procedures is not conducted, nor is any IH-specific emergency training provided in this course. In addition, this training is not provided to non-shift IHTs. However, these non-shift IHTs are expected to respond to emergencies, and are not precluded from working on-shift for overtime, vacation, or sick-time coverage for the trained on-shift IHTs.

Observation S-09-ESQ-TANKFARM-003-O01 – RCT response to tank over-pressurization is not in accordance with RCT-specific response training.

Discussion:

The On-the Job-Training Card and Guide for Tank Farm Alarm Response, Course 351511, Revision 6 was implemented to prepare RCTs to respond to tank farm overpressure alarms. During several over-pressure events since October 1, 2008, RCT response actions did not comply with training.

The training directs RCTs to:

- ensure that all entrances of the tank farm are secured and locked, or posted "Airborne Radioactivity;"
- don personnel protective equipment (SCBA and one set of protective clothing);
- gather count rate instruments, dose rate instruments, portable air sampler; and
- obtain smear and dose rate surveys of all pits, risers, ventilation ducts, and other fixtures connected to the alarming tank or near the alarming source.

  "[When performing dose rate surveys] pay particular attention to ventilation duct elbows directly above the tank, horizontal runs in the ventilation duct, de-entrainer and filters on the exhaust, and inlet HEPA filter."

Four responses to tank over-pressure alarms were evaluated. The tank over-pressure alarm was received on October 8, 2008, at SY Farm, on October 15, 2008, at AN Farm and AW Farm, and on October 16, 2008, at AY/AZ Farms. Contrary to the training received, the following discrepancies were noted during the RCT response actions:

1. In no case was the farm posted as an "Airborne Radioactivity Area."

2. In no case were both SCBA and one set of protective clothing utilized for the sweep surveys.

3. Reviews of completed Radiological Survey Reports found instances where only contamination surveys and no dose rate surveys were performed. In at least one instance when dose rate surveys were performed (Radiological Survey Report WTO-012177), only general area dose rates were performed, contrary to the training direction to "pay particular attention to ventilation duct elbows directly above the tank, horizontal runs in the ventilation duct, de-entrainer and filters on the exhaust, and inlet HEPA filter."

Conclusion:

The Surveillance Team found emergency response and conduct of operations deficiencies in which the Base Operations and 222-S Laboratory management team did not implement approved abnormal response procedures and processes following indications of abnormal operating conditions. In some instances Operations Managers and supervisory personnel continued to believe informal actions were appropriate when responding to indications of abnormal operating conditions. In addition, support organizations such as IH and Base Operations Radiological Control did not recommend or employ rigorous emergency response processes during these observed events to ensure adequate application of the core functions of integrated safety management.

Acceptable performance will be evident when the TOC institutes and demonstrates a management culture of believing observed or reported abnormal indications, utilizing and following EP procedures, and providing protection to their workers and to equipment until the indications are either validated or proven wrong. Performance and processes will be critically examined to identify and correct problems to prevent recurrence. Personnel will be fully trained on expected immediate and follow-up actions, and sufficient EP drills will be conducted to further train, reinforce, and ensure understanding by personnel. These actions are vital to ensure a robust ISMS and VPP system.

Double click to change COPY type

Response to Tank Farm Ventilation Upset

PCA Incorporated:	TF-2009-0101
Procedure Signatures for:	TF-AOP-021, A-1
Type of Change:	PCA
Review Designator:	S, R
USQ Screening Number:	TF-08-2016-D, Rev. 1

POSITION/ORG	DELEGATE	DATE
SSM/BO SO	B. A. Johnson	02/23/2009
IH/Base Ops	W. L. Adams	02/19/2009
HP/BO Radcon	Jeff Marks	02/19/2009
SSM/Base Ops	David W. Strasser	02/24/2009
Technical Authority	David W. Strasser	02/24/2009
Technical Writer	L. Coleman	02/26/2009
Approval Authority	Peter L. Owen	02/25/2009

Justification:

Operations request.

Summary of Changes:

Added additional Steps under Step 3.1.7 for re-entry into farm to re-start exhauster.

Next Periodic Review Date – 12/31/2010

The following organization(s) have determined their need to review this procedure at the next periodic review cycle: Technical Authority, Safety, Environmental and Radiological Control.

1.0 AFFECTED PERSONNEL, FACILITIES, EQUIPMENT, OR AREAS

This procedure applies to WRPS personnel and subcontractors doing work in 200 East Area and 200 West Area and equipment in these areas. This procedure does not apply to WRPS personnel and subcontractors doing work at the 222-S Laboratory Complex or 242-A/242-S Evaporators.

The intent of this AOP is to ensure personnel or environmental safety when a primary tank pressurization, loss of Tank Farm primary ventilation, or a ventilation CAM High Rad alarm has been activated.

2.0 ENTRY CONDITIONS

2.1.1 Shift office receives notification of any of the following:

- Report of a tank primary ventilation exhaust stack Continuous Air Monitor (CAM) High Rad alarm
- Unexpected Double Shell Tank (DST) primary ventilation shutdown
- Unexpected double shell tank pressurization alarm.

2.1.2 **IF** at any time event meets ERP or TFC-OPS-OPER-C-24, Attachment A criteria, **EXIT** this AOP, **AND**

IMPLEMENT DOE-0223, RLEP 1.1, BED Checklisted Duties.

3.0 ACTIONS

3.1 Initial Actions

3.1.1 **STOP** all associated work and waste disturbing activities in the affected Tank Farm.

3.1.2 **INSTRUCT** personnel inside affected Tank Farm to safely exit the farm, **AND**

PERFORM personnel surveys as required by farm postings.

3.1.3 **ANNOUNCE** the following over the radio:

- Entry into the AOP due to a ventilation CAM High Rad alarm, loss of Tank Farm primary ventilation, or unexpected tank pressurization alarm.
- Location of alarm
- Wind speed and direction (e.g. wind is 5 mph from the North)
- All personnel stay clear and upwind until further direction.

3.1.4 **CONTROL** access to affected tank farm in accordance with latest Tank Vapor Information Sheet.

3.1.5 **CONFIRM** affected tank temperatures, pressures and levels are within expected parameters.

3.1.5.1 **IF** readings indicate unexpected temperatures, levels, or flammable gas increase above normal or expected ranges established for a Double or Single Shell tank, **EXIT** this AOP. **AND**

ENTER TF-AOP-005.

3.1.6 **IF** responding to a tank ventilation stack CAM High Rad alarm, **PERFORM** the following:

3.1.6.1 **ENSURE** primary tank ventilation system monitored by alarming CAM is shut down.

3.1.6.2 **DIRECT** Operator, IHT & HPT DON PPE in accordance with affected farm Tank Vapor Information Sheet (TVIS) and radiological postings prior to entering farm.

3.1 Initial Actions (Cont.)

3.1.6.3 **UTILIZING** current wind conditions and turnback values in Attachment 1 & Attachment 2. **DIRECT** personnel to affected CAM using safe route of travel.

3.1.6.4 HPT **PERFORM** survey of continuous air monitor sampler filter paper and record sampler filter paper and exchange as necessary.

3.1.6.5 **IF** survey results indicate valid high radiation alarm, **EXIT** this AOP, **AND**

ENTER TF-AOP-011.

3.1.7 **IF** indications and readings from the field indicate equipment failure or a spurious alarm, **RESTART** ventilation as applicable.

3.1.7.1 IF entry into affected farm is necessary, **DON** PPE in accordance with TVIS and radiological postings.

3.1.7.2 HPT & IHT **MONITOR** work area for abnormal radiological and vapor indications using Attachment 1 and Attachment 2 turnback values.

3.1.7.3 IF radiological and vapor indications are normal, **PERFORM** field activities necessary to restart ventilation.

3.1.7.4 IF radiological or vapor indications are abnormal, **REPORT** findings to Shift Manager.

3.2 Follow Up Actions

NOTE - Steps within Section 3.2 may be performed in any logical order.

3.2.1 **EVALUATE** conditions against reporting requirements of TFC-OPS-OPER-C-24, "Occurrence Reporting and Processing of Operations Information" for Operational Emergency criteria, Abnormal Events criteria and Occurrence Categories criteria.

3.2.2 **NOTIFY** management per Event Notification Matrix.

4.0 RECOVERY

4.1 Termination/Exit Criteria

4.1.1 One of the following has occurred:

- Event meets ERP or TFC-OPS-OPER-C-24, Attachment A criteria.
- Cause of primary tank pressurization, loss of primary ventilation, and/or CAM High Rad alarm has been determined and corrected and indications have returned to normal, or
- Equipment is verified as not operating correctly by other monitoring or equipment indications, or
- HPT and IHT has provided adequate information to Shift Manager to enable determining if return to normal operations can be allowed.

4.2 Restoration

NOTE - Actual steps taken for restoration are dependent on specific situation and facility configuration at time of event. The following steps are general guidance and may be performed concurrently, in any order, or omitted at discretion of Shift Manager to fit situation.

4.2.1 **RESTORE** routine access and post appropriately in accordance with Radiological and TVIS requirements.

4.2.2 **IF** primary ventilation shut down due to equipment failure, **INITIATE** a work request to correct the failure.

4.2.3 **RETURN** to ARP and finish remaining actions as required.

5.0 RECORDS

NOTE - No records are generated during the performance of this procedure.

Attachment 1 – Guide for Establishing Radiological Turn-Back Values

The table below provides removable contamination levels for respiratory protection (29 CFR 1910.134)

The following contamination values should be considered as turn-back values based upon the type of respiratory protection worn.

NOTE - Minimum PPE requirements prescribed by Radcon postings apply.

Recommended Turn-Back Values for Contamination

Conditions			Turn back levels			Minimum PPE
Beta-gamma		Alpha	Beta-gamma		Alpha	
Dpm/100cm^2	w/o mrad/hr$_{1,2}$	dpm/100cm^2	dpm/100cm^2	w/o mrad/hr$_{1,2}$	dpm/100cm^2	
<1,000		< 20	1,000		20	No PPE
≥1,000		≥20	100,000		2,000	1 full set
≥100,000		≥2,000		40,000*	4,000,000	2 full sets
Unknown	Unknown	Unknown		40,000*	4,000,000	2 full sets

(1) Window-open (w/o) measurements.
(2) Conversion factor: 62,400 dpm/100 cm^2 Sr-90 per mrad/hr.
*These values have been adjusted in order to stay within instrument capabilities. All other values listed in the above table have been rounded down for ease of use and to maintain a conservative approach.

Attachment 1 – Guide for Establishing Radiological Turn-Back Values (Cont.)

NOTE - Minimum PPE requirements prescribed by Radcon postings apply.

Recommended Turn-Back Values for Airborne Radioactivity

Conditions			Turn back levels			Respiratory Protection	
Beta-gamma		Alpha	Beta-gamma		Alpha		PF
dpm/100cm^2	w/o mrad/hr$_{1,2}$	dpm/100cm^2	dpm/100cm^2	w/o mrad/hr$_{1,2}$	dpm/100cm^2		
<1,000		<20	1,000		20	No Mask	1
≥1,000		≥20		160	10,000	PAPR – Helmet / Loose fit	25
	>160	>10,000		320	20,000	APR	50
	>320	>20,000		4,000*	400,000	PAPR - Full Face/ Hood	1,000
	>320	>20,000		4,000*	400,000	Supplied Air	1,000
	>4,000*	>400,000		40,000*	4,000,000	SCBA Positive Pressure/ Airline w/escape cylinder	10,000
Unknown	Unknown	Unknown		40,000*	4,000,000	SCBA Positive Pressure/ Airline w/escape cylinder	10,000

(1) Window-open (w/o) measurements.
(2) Conversion factor: 62,400 dpm/100 cm^2 Sr-90 per mrad/hr.
*These values have been adjusted in order to stay within instrument capabilities. All other values listed in the above table have been rounded down for ease of use and to maintain a conservative approach.

Attachment 1 – Guide for Establishing Radiological Turn-Back Values (Cont.)

NOTE- If supplemental dosimetry is available, the following table provides recommendations for supplemental dosimetry to be worn while responding to emergency situations.

- If supplemental dosimetry is not available, time keeping should be considered to prevent responding individuals from exceeding their administrative control levels.

- "Dose turn-back levels should be determined at 80% of the responding individuals remaining annual dose margin as compared to the administrative control levels found in table H2-1 of the Tank Farms Radiological Control Manual (HNF-5183) and not to exceed 5 rem/hr at 30 cm.

- Minimum PPE requirements prescribed by Radcon postings apply.

Recommended Turn-Back Values for Radiation Dose			
	Turn back level	Whole Body Dosimetry	Recommended Supplemental Dosimetry
Radiation			
Up to 100 mrem/hr at 30 cm	100 mrem/hr at 30 cm	HSD TLD	Pocket Dosimeter
Up to 5 Rem/hr at 30 cm	5 Rem/hr at 30 cm	HSD TLD	Electronic Dosimeter
Surface contamination(3)			
Up to 250 mrad/hr, (window open)	250 mrad/hr, (window open)	HSD TLD	NA
Greater than 250 mrad/hr, (window open)	40,000 mrad/hr, (window open)	HSD TLD	Finger Rings
Unknown Radiological Conditions			
Unknown Levels	5 Rem/hr at 30 cm or 40,000 mrad/hr, (window open)	HSD TLD	Electronic Dosimeter and Finger Rings
(3) Surface contamination refers to Beta-gamma contamination. Exposure to Alpha contamination is controlled using one layer of protective clothing.			

Attachment 2 – Guide for Industrial Hygiene Monitoring

NOTE - Minimum PPE requirements prescribed by TVIS postings apply.

Recommended Chemical Hazard Sampling Strategy		
PPE	Turnback Values	
None	Ammonia	12 ppm
	VOC	2 ppm
SCBA	Ammonia	300 ppm
	VOC	25 ppm

Message

From: Hardy, Don B
Sent: Friday, May 08, 2009 11:12 AM
To: Mata, Beth L
Cc: Gregory, Robert E (Rob)
Subject: RE: SigPER Action Concurrence: WRPS-PER-2009-0385.12

Beth,

Revision K-0 of ERP-222S-009 contains the specific verbiage (highlighted below), that when coupled with the release of LO-200-110, "Response to Contamination Detected Inside Laboratory Radiological Control Areas" addresses the issue identified by DOE.

Prior to the revision of ERP-222S-009 one could make argument (DOE's concern) that any time radiological contamination was identified inside the CA area (a fairly common occurrence) of 222S Laboratory, Emergency Response Procedure ERP-222S-009 should be invoked. That was never the intent of the ERP, rather the intent was to initiate ERP-222S-009 upon a significant spill event (hazardous and/or radiological) that required activation of the facilities Facility Emergency Response Organization (FERO). A scenario could be ---- "discovery of a ruptured mixed waste drum outside the facility that occurred during loading/unloading."

To clarify and address DOE issue, we modified the ERP's initiating condition (see highlighted section that limits the radiological initiating condition to radiological releases indentified outside of a posted radiological area) and developed a new procedure LO-200-110, "Response to Contamination Detected Inside Laboratory Radiological Control Areas." This new procedure specifically identifies pre-planned actions for responding to contamination identified inside the posted CA area of 222S Laboratory.

Both procedures revisions have been reviewed with Rick Janson (DOE) who identified the issue in the assessment that led to the SIG-PER. He and I both agree the revisions satisfactorily address the DOE issue originally identified relative to 222S Laboratory.

Pls let me know if you need anything further clarification.

Thanks,
Don

1.0 INITIATING CONDITIONS

A spill of hazardous/radiological material occurs, or a release of radiological contamination occurs outside of the posted radiological area.

From: Mata, Beth L
Sent: Thursday, May 07, 2009 9:28 AM

To: Hardy, Don B
Cc: Gregory, Robert E (Rob)
Subject: SigPER Action Concurrence: WRPS-PER-2009-0385.12
Importance: High

Don –

Per the voicemail I left you earlier, I am trying to concur/close the following ESTAR action on behalf of Rob Gregory. The corrective action as written was to clarify entrance criteria for spills, releases, and CAM alarms. However, when I review the revised procedure, it only addresses spills and releases. Earlier revision to ERP-222S-009 (J-0) removes reference to CAM alarms. Without additional information, it appears that the procedure revision does not fulfill the intent of the corrective action. Please provide a justification of how entrance criteria for CAM alarms is incorporated or why entrance criteria for CAM alarms is not required.

Task#	WRPS-PER-2009-0385.12
Subject	WRPS-PER-2009-0385; SIG; CATPR-03-01 Revise ERP-222S-009 to clarify the entrance criteria for spills, releases, and CAM alarms. Deliverable: Ap

Corrective Action: CATPR-03-01 Revise ERP-222S-009 to clarify the entrance criteria for spills, releases, and CAM alarms.

Revised entrance criteria:

1.0 INITIATING CONDITIONS

A spill of hazardous/radiological material occurs, or a release of radiological contamination occurs outside of the posted radiological area.

Earlier procedure revision:

J-0	NA	03/10/2009	All	Remove continuous air monitor alarm verbiage; new title

Thanks,
Beth Mata

Message

From: Bickel, Eric E
Sent: Friday, May 08, 2009 9:33 AM
To: Livesey, Lee M
Cc: Hanni, Jonathan B; Brown, Nancy L
Subject: Rescreen Request for WRPS-2009-0386

Lee-

The response to WRPS-2009-0386 should be assigned to RadCon Programs. The ORP observation deals with a disconnect between current acceptable field practice and training. Therefore the training included in Course 351511 should be updated to reflect current practice. The updating of training is the responsibility of RadCon Programs.

This email confirms our discussion earlier today where you concurred that this PER response should be assigned to RadCon programs.

Therefore, this response was declined and requested to be rescreened to RadCon Programs for resolution.

Please let me know if you have questions.

Eric E. Bickel
Certified Health Physicist (CHP)
Base Ops RadCon

Location: 274AW/B-102
MSIN: S5-07
Phone: 372.1470
Cell Phone: 521.6631
FAX: 372.3106

Save

Problem Evaluation Request (PER)

WRPS-PER-2009-0387
In Process/Work

PER No	Date of Discovery	Time of Discovery (24:00)	Project
WRPS-PER-2009-0387	03/11/2009	13:00	Engineering

Location

2750E

How Was Problem Discovered

Attending a Meeting

Description of Concern or Problem

Items with applied "Accept" tag (Green tag) procured for Safety Significant Systems Structures or Components and not installed, require additional reviews and controls to ensure their proper qualification for use. This action was not included in the Corrective Actions Plan developed for WRPS-PER-2008-0279 (Significant PER).

Requirement Not Satisfied	Source Document Number

Equipment Identification Number	System Identification
N/A	

Immediate actions Taken or Planned

The problem was discussed with the Chief Engineer and QA Manager

Recommended Corrective actions

1. Evaluate items with "Green tag" for acceptance prior to their use
2. Develop a Lessons Learned Bulletin for "Inadequate corrective action and extent of condition"

Suggest to assign this PER to Mark Knight as PER/wRES

Originator Contact

I would like to review the the corrective actions at closure to ensure they were effective

Originators Name	Originators ID	Originators Phone	Date Initiated
Maciuca, Tino	H0020930	(509) 373-6334	03/11/2009

SHIFT OPERATIONS REVIEW

Title

Reviews and controls for Safety Significat Components

How Discovered	Agency
self-ID prior to event	

Reportability	SSC Operability	Operability Review	Comp Measures Req
Non-Reportable	N/A	N/A	

Describe actions Taken or Recommended

No additional actions taken or recommended.

SO Reviewer Name	SO Reviewer ID	SO Reviewer Phone	SO Review Date
Higham, Dale B	H0078950	(509) 373-2689	03/11/2009

SCREENING

PER Significance Level	
PER with Resolution	

Independent Assessment Review	Occurrence Report Number	Externally Identified	
Yes		No	

Assigned Responsible Manager	Facilities Rep / SSO	Safety Management Rep	
Cato, Diane M			

Program	Safety Management Program
• N/A	• Engineering Configuration Management

PER Screening Comments

PER w/ Res with Formal Apparent Cause Analysis
See WRPS-PER-2008-0279 (Significant PER)
Develop Corrective Actions to:
1) Disposition material and equipment procured prior to 01/18/09, but not installed.
2) Determine why item #1 above was not included in the Root Cause Analysis for WRPS-PER-2008-0279
cc: Greg Hanson, Craig Anderson, Eric Nelson, Tracy Steelman
(Nancy Brown 03/12/09)

RESCREEN REQUEST (Prior to Launch)Per direction of Mike Harty, please re-assign WRPS-PER-2009-0387 (green-tagged items in storage require additional reviews and controls to ensure their proper qualification for use in Safety-Significant SSCs) to Diane Cato. This PER deals with a long-term programmatic material control issue. Thank you,
David Bragg

RESCREEN COMMENTS: Reassign (Knight to Cato). PER w/ Res with Formal Apparent Cause Analysis
See WRPS-PER-2008-0279 (Significant PER)
Develop Corrective Actions to:
1) Disposition material and equipment procured prior to 01/18/09, but not installed.
2) Determine why item #1 above was not included in the Root Cause Analysis for WRPS-PER-2008-0279
cc: Greg Hanson, Craig Anderson, Eric Nelson, Tracy Steelman AO 3/16/09

Causal Code

A4B2C08	Management Problem Resource Management LTA Means not provided for assuring adequate equipment quality, reliability, or operability
A4B3C08	Management Problem Work Organization and Planning LTA Job scoping did not identify special circumstances an/or conditions

MGT/Comm/Train	Human Performance	GEMS	Equip/Eng/Other

Failed Barrier	ORPS Code	Functional Area	Work Process
	Not Applicable	Engineering	• Corrective Action Management • Engineering Evaluation

ISMS	Consequence Code	
Perform work within the controls	• Rework - Task inadequately planned or performed, resulting in rework	

PER Screening Chair	PER Screening Chair ID	PER Screening Chair Phone	PER Screening Date
Brown, Nancy L	H0088797	(509) 373-0992	03/12/2009

PAAA REVIEW

PAAA Screening	PAAA Codes	Function Codes	
Potential PAAA Reportable	• 10 CFR 830.122 (c)(2)	• Corrective Action Program	

NTS Report Number	NTS Report Date	

Repetitive / Recurrent	Programmatic	Intentional Violation / Misrepresentation	
No	No	No	

PAAA Screening Comments

PAAA Reviewer Name	PAAA Review Date	
Anderson, Craig E	03/17/2009	

PAAA Approver Name	PAAA Approve Date	

Anderson, Craig E	03/17/2009	

SENIOR MANAGEMENT REVIEW/CONCURRENCE

TF Operations Morning Leadership Call

TF Operations Morning Leadership Call is no longer required.

Instructions for Responsible Manager

Review the PER Screening Tab and Senior Manager Review for requested data. Complete the task in E-STARS in accordance with TFC-ESHQ-Q_C-C-01, and TFC-ESHQ-Q_ADM-C-12 Apparent Cause Analysis & Corrective Action Planning.

Senior Management	Sr Mgmt ID	Sr Mgmt Phone	Sr Mgmt Review Date
Owen, Annette	H0054042	(509) 372-0533	03/17/2009

CAUSE ANALYSIS

Description of Occurrence

Items with applied "Accept" tag (Green tag) procured for Safety Significant Systems Structures or Components and not installed, require additional reviews and controls to ensure their proper qualification for use. This action was not included in the Corrective Actions Plan developed for WRPS-PER-2008-0279 (Significant PER).

Extent of Condition

This deficiency was the incomplete extent of conditions from WRPS-PER-2008-0279. A review of work performed since the JCO was approved was performed to identify any replacements of SS components to see if Commercial Grade Dedication was required and if so was it performed to the new standard. WRPS-0900387 (attached) was written to document the review of components needed to support an evaporator campaign. WRPS-0900485 (attached) was written to document the results of the review of the balance of the SS components (not covered in WRPS-0900387). No components were found that had not been dedicated in accordance with the management directives in place at the time.

Safety Significance

The safety significance was moderate. There was potential for components of indeterminate quality to be pulled from the warehouse and used. However, the system engineers were knowledgeable of the requirement to perform commercial grade dedication and ensured that the process was completed.

Generic Implications

Remedial Corrective Action

A nonconformance report (TF-09-NCR-002) was issued to document the Items with applied "Accept" tag (Green tag) procured for Safety Significant Systems Structures or Components and not installed, that require additional reviews and controls to ensure their proper qualification for use. Provided interim direction and compensatory action (TFC-MD-65) for acceptance of Safety Significant (SS) items and materials for use in the Tank Farm facilities. TFC-MD-65 requires that during the staging of SS items and materials for use within the tank farms, a review and verification of acceptability must be performed before installation or use.

Causal Analysis, Apparent Cause and/or Root Cause Analysis

See attached Why analysis (PER-2009-0387 WHY Rev A-1)

CORRECTIVE ACTIONS

Actionee	Action Due Date	E-STARS Number
Knight, Mark A	08/27/2009	

Action

Issue an addendum to the RCA of WRPS-2008-0279 to reference the gap in corrective actions noted in WRPS-PER-2009-0387 and add the remedial corrective actions noted above to the Corrective Action Plan.

Deliverable: ESRB approved RCA addendum for WRPS-PER-2009-0279.

Corrective Action Attachments

Actionee	Action Due Date	E-STARS Number
Maciuca, Tino	08/31/2009	

Action

Develop a Lessons Learned on development of corrective actions that fully address the interfaces and boundaries of the affected processes.

Deliverable: Corrective Action Management Lessons Learned
Corrective Action Attachments
ATTACHMENTS
FW_ WRPS-PER-2009-0387 EXTENSION REQUEST.msg
FW_ WRPS-PER-2009-0387.msg
Link to PER
PER-2009-0387 WHY Rev A-1.doc
RE_ WRPS-PER-2009-0387 EXTENSION.msg
WRPS-0900387Extent_of_Condition.pdf
WRPS-0900485Extent_of_Condition.pdf
WRPS-PER-2009-0387.msg

AUDIT HISTORY

Change Date	Auditor	Comments
03/12/2009 15:40	Brown, Nancy L	'PER Screening Comments' was changed.
03/13/2009 08:53	Owen, Annette	'PER Screening Comments' was changed.
03/16/2009 13:11	Owen, Annette	'Assigned Responsible Manager' was changed. 'PER Screening Comments' was changed.
03/17/2009 07:55	Owen, Annette	Responsible Manager Task Launched by Owen, Annette
03/17/2009 13:46	Anderson, Craig E	PAAA Screening Comments Changed
03/17/2009 14:44	Glaman, Linda R	'How Was Problem Discovered' was corrected at the request of the originator. L Glaman
06/19/2009 10:29	Cato, Diane M	Change to Cause Analysis screen/Corrective Action plan.

-- End of Report --
07/09/2009 10:38 AM

Task# WRPS-PER-2009-0387

E-STARS[R] Report
Task Detail Report
07/09/2009 1039

TASK INFORMATION			
Task#	WRPS-PER-2009-0387		
Subject	RES; Reviews and controls for Safety Significat Components		
Parent Task#		**Status**	Open
Reference		**Due**	06/23/2009
Originator	^PER Coordinator	**Priority**	Medium
Originator Phone		**Category**	PER
Origination Date	03/11/2009 1600	**Generic1**	None
Remote Task#		**Generic2**	None
Deliverable	PER Review	**Generic3**	None
Class	None	**View Permissions**	Global
Instructions	*No Instructions*		

ROUTING LISTS		
1	Responsible Manager	Active
	Review the PER Screening Tab and Senior Manager Review for requested data. Complete the task in E-STARS in accordance with TFC-ESHQ-Q_C-C-01, and TFC-ESHQ-Q_ADM-C-12 Apparent Cause Analysis & Corrective Action Planning.	
	• Cato, Diane M - Assign - Completed with comments - 06/18/2009 1444 *Instructions:*	
	• Cato, Diane M - Assign - Withdrawn - 05/21/2009 1036 *Instructions:* Did you contact the originator about the PER? Document your contact in the response window.	
	• ^Independent Assessment Review(Brown, Robert L) - Review - Concur with comments - 06/29/2009 1347 *Instructions:* Independent Assessor Review	
2	Review Initial PER	Inactive
	Review New PER	
	• ^SO(Higham, Dale B) - Review - Concur - 03/11/2009 2031 *Instructions:*	
	• ^PER Screening(Brown, Nancy L) - Review - Concur - 03/12/2009 1450 *Instructions:*	
	• ^Mgr Review - Review - Withdrawn - 03/13/2009 0853 *Instructions:*	
	• ^PER Screening(Owen, Annette) - Assign - Completed - 03/16/2009 1311 *Instructions:*	
	• ^Mgr Review(Owen, Annette) - Review - Concur - 03/17/2009 0754 *Instructions:*	

ATTACHMENTS	
Attachments	1. FW_ WRPS-PER-2009-0387 EXTENSION REQUEST.msg 2. FW_ WRPS-PER-2009-0387.msg 3. Link to PER 4. PER-2009-0387 WHY Rev A-1.doc 5. RE_ WRPS-PER-2009-0387 EXTENSION.msg

Task# WRPS-PER-2009-0387

	6. WRPS-0900387Extent_of_Condition.pdf 7. WRPS-0900485Extent_of_Condition.pdf 8. WRPS-PER-2009-0387.msg

COMMENTS

Poster	^PER Coordinator (Glaman, Linda R) - 04/27/2009 0929
	1st extension per approved email request. L Glaman 4-27-09
	Please extend the subject PER to May 15, 2009. Additional time needed to complete the documented causal analysis and coordinate it with an additional root cause committed to in the response to DOE. Manager: Diane Cato Sue Littlejohn 4-24-09
Poster	^PER Coordinator (Glaman, Linda R) - 05/21/2009 1038
	2nd extension per attached email request. LBG 5-21-09
	Please extend the subject PER to June 15, 2009. Focus on other related tasks to Commercial Grade Dedication have impacted the ability to complete this task. S Littlejohn for D Cato 5-21-09 approved C Maciuca 5-21-09
Poster	Cato, Diane M - 06/18/2009 1444
	Completed
	Two Extent of condition documents attached. Documented Causal analysis completed with corrective actions developed, document attached. PER updated.
Poster	^Independent Assessment Review (Brown, Robert L) - 06/29/2009 1347
	Concur
	Concur Bob Brown

TASK DUE DATE HISTORY

Modified	05/21/2009 1036 - ^PER Coordinator (Glaman, Linda R)	**New Due Date**	06/23/2009 1630
Modified	04/27/2009 0926 - ^PER Coordinator (Glaman, Linda R)	**New Due Date**	05/15/2009 1630
Modified	03/17/2009 0755 - ^PER Coordinator	**New Due Date**	04/29/2009 1630
Modified	03/17/2009 0755 - ^PER Coordinator	**New Due Date**	04/25/2009 1630
Modified	03/11/2009 1600 - ^PER Coordinator	**New Due Date**	03/13/2009 1630

SUB TASK HISTORY

No Subtasks

-- end of report --

PER-2009-0387
APPARENT CAUSE ANALYSIS
WHY STAIRCASE (Rev A-1)

Problem Statement

Items with applied "Accept" tag (Green tag) procured for Safety Significant Systems Structures or Components and not installed, require additional reviews and controls to ensure their proper qualification for use. This action was not included in the Corrective Actions Plan developed for WRPS-PER-2008-0279 (Significant PER).

WHY #1

Why did the Corrective Action Plan for WRPS-2008-0279 not include corrective actions to address the noted items?

The Extent of Condition for SIG PER-2008-0279 states: "*Any components, designated less than Quality Assurance Level FULL, that have been upgraded for Safety Significant application using TFC-ENG-DESIGN-C-15, Commercial Grade Item Upgrade Dedication, since December 5, 2003, should be reviewed/revised to ensure compliance. This would include the issues identified in WRPS-PER-2008-0421, WRPS-PER-2008-0435 and WRPS-PER-2008-0436. The corrective actions assigned to address RC-01 will also address the Extent of Condition.*"

The corrective actions assigned to address RC-01included, in part:

- CATPR-01-01 - *Provide interim direction with revised requirements for procurement of safety significant SSCs and commercial grade item dedications.*
- CATPR-01-08 - *Evaluate and revise, as required, the commercial grade item dedication records of safety significant equipment included in Letter, W. J. Johnson, WRPS, to S. J. Olinger, ORP, Contract No. DE-AC27-08RV14800 – Request for Approval of Justification for Continued Operation using Existing Safety-Significant Systems during Planned Activities in light of Commercial Grade Dedication Issues, WRPS 0900098, dated January 16, 2009.*

The CATPR-01-01corrective action provided interim direction for all WRPS procurements initiated after 01/18/09, and for all safety significant items procured prior to 1/18/09, but not yet installed, and not specifically covered by JCO TF-09-01. The CATPR -01-08 corrective action addressed the existing safety-significant systems used during planned activities in light of commercial grade dedication issues for all safety significant items procured prior to 1/18/09.

PER-2009-0387
APPARENT CAUSE ANALYSIS
WHY STAIRCASE (Rev A-1)

The CATPR-01-01corrective action (TFC-MD-62) only addressed items in the procurement process. The CATPR-01-08 corrective action (JCO TF-09-01) addressed installed items. Items that were procured and accepted ("Accept" tag (Green tag)) prior to 1/18/09, but not yet installed, had completed the procurement process, and would not be controlled by the CATPR-01-01 corrective action. This left the identified gap of items with applied "Accept" tag (Green tag) procured for Safety Significant Systems Structures or Components, and not installed, that required additional reviews and controls to ensure their proper qualification for use.

The intent of CATPR-01-01, as stated, was to address all safety significant items procured prior to 1/18/09, but not yet installed. The WHY was the result of the lack of full review of the interfaces and boundaries of the procurement process with the control of materials, which resulted in the identified gap. While the root cause analysis performed a thorough review and analysis of the Procurement and Commercial Grade Item Dedication processes, the corrective actions developed did not fully address the interfaces and boundaries of the procurement process with the control of materials.

Remedial Corrective Actions

1. A nonconformance report (TF-09-NCR-002) was issued to document the Items with applied "Accept" tag (Green tag) procured for Safety Significant Systems Structures or Components and not installed, that require additional reviews and controls to ensure their proper qualification for use. (Complete)
2. Provided interim direction and compensatory action (TFC-MD-65) for acceptance of Safety Significant (SS) items and materials for use in the Tank Farm facilities. TFC-MD-65 requires that during the staging of SS items and materials for use within the tank farms, a review and verification of acceptability must be performed before installation or use. This management directive outlines the steps to take for this purpose. (Complete)

Corrective Actions:

1. Issue an addendum to the RCA of WRPS-2008-0279 to reference the gap in corrective actions noted in WRPS-PER-2009-0387, and add the remedial corrective actions noted above to the Corrective Action Plan.

   Actionee: M. Knight Due Date: 8/31/09

   Deliverable: ESRB approved RSC addendum for WRPS-PER-2009-0279.

Corrective Actions (cont.):

2. Develop a Lessons Learned on development of corrective actions that fully address the interfaces and boundaries of the affected processes.

   Actionee: T. Maciuca Due Date: 8/31/09

   Deliverable: Corrective Action Management Lessons Learned

INTEROFFICE MEMORANDUM

washington river protection solutions

Date: March 17, 2009 WRPS-0900387

To: R. P. Raven
T. R. Reynolds

From: R. E. Mendoza

Subject: REVIEW OF SS COMPONENTS INSTALLED AFTER JANUARY 18, 2009

BACKGROUND

Issues have been identified with the Tank Operations Contractor Commercial Grade Dedication process. As a result a justification for continued operation (JCO) was developed and approved to cover existing safety-significant (SS) systems associated with planned activities which include double shell tank (DST) to DST transfers and transfers associated with 242-A Evaporator Campaigns (JCO TF-09-01). A management directive (TFC-MD-062) was issued to provide compensatory actions to ensure that any new procurements of SS equipment would be correct with regards to CGD process. However, controls were not put in place to ensure that equipment that had been procured prior to the issuance of the Management Directive, which are considered to be of indeterminate quality, were not installed in an SS application following the issuance of the JCO (1/18/09). As a result, an evaluation is required to determine what SS equipment has been installed since 1/18/09 so that the CGD paperwork can be reviewed for acceptability.

EVALUATION

This memo documents the review for the systems needed to support the upcoming 242-A Evaporator campaign, to include associated transfers. These systems are Waste Transfer Primary Piping System Pressure Relieving Devices, Service Water Pressure Detection System, Isolation Valves for Double Valve Isolation, and Transfer Leak Detection Systems. In order to determine which work packages were worked since 1/18/09, a report was pulled from CHAMPS to find all of the work packages that were open as of 1/18/09 or have closed since 1/18/09. This report was reviewed with the results discussed below.

Waste Transfer Primary Piping System Pressure Relieving Devices

The only devices that are of concern for 242-A Evaporator campaign and associated transfers are the rupture disk PSE-PB2-1 and pressure relief valve PSV-PB2-1. **No work has been done since 1/18/09.**

Service Water Protection Device (SWPD)

There is one SWPD in operation, AWFP-RW-PS-222. Work Order TFC-WO-09-0511, AW Pressure Switch Function, was worked since 1/18/09. **No items were replaced.**

Isolation Valves for Double Valve Isolation

No Safety Significant components have been installed in DST Waste Transfer systems since 1/18/09. The report does include work packages for SS components being installed as part of the C-104 work that is outside the scope of this review.

Transfer Leak Detection Systems

The following packages have been worked:

- TFC-WO-08-2549, AP Leak Detector Function – **No relays were replaced.**
- TFC-WO-09-0088, AP Leak Detector Function – **No relays were replaced.**
- TFC-WO-08-2510, AW Leak Detector Function – Two MTL-2313A relays and one MTL-2215 were replaced, but were for encasement leak detection circuits **which are classified by the Safety Equipment List as General Service.**
- TFC-WO-08-2796, AW Cabinet Re-wiring Away from Heaters – Fabricated a General Service bracket to support wiring bundles per ECN-726040 R0. In addition, replacement safety significant wire was purchased to replace some that had been discolored and this wire was dedicated by CGI-03057. **The CGI meets the management directive and component critical characteristics were verified (see related TF-09-NCR-007).**
- TFC-WO-09-0609, AW TFLAN Modification from Fiber Optic to Copper per ECN-726155 R0. This package upgraded the Cat 5E cable per CGI-03062 and the RJ-45 connectors per CGI-03063. **The CGIs followed the protocol in the management directive.**
- TFC-WO-08-0540, AN leak detector functional check – **no equipment was replaced.**
- TFC-WO-08-1120, AY/AZ leak detector functions – **was field work complete (installed and operationally accepted) prior to 1/18/09.**

In addition, TFMSS was searched to confirm that no Safety Significant components were installed under the minor Standing Work orders.

- 242A Operations Minor Standing Work Order contained one Bill of Material (BOM) for a barbed hose fitting **(General Service).**
- BO DST Construction Standing Minor Work Order had no associated BOMs
- BO DST Operations Standing Minor Work Order had no associated BOMs
- BO DST Instrument Standing Minor Work Order had no associated BOMs
- BO DST Electrical Standing Minor Work Order had no associated BOMs
- BO DST Mechanical Standing Minor Work Order contained one BOM for an air hose **(General Service)**

CONCLUSION

Engineering has reviewed work performed since 1/18/09 with respect to equipment needed to support 242-A Evaporator Campaign and associated transfers. All SS components have CGDs that were performed in accordance with TFC-MD-062 and are acceptable for use.

REM:JLM

cc: M. N. Brosee
H. S. Berman
D. M. Cato
E. A. Nelson
V. L. Wagner
File/LB

INTEROFFICE MEMORANDUM

washington river protection solutions

Date: April 1, 2009 WRPS-0900485

To: R. P. Raven
T. R. Reynolds

From: R. E. Mendoza

Subject: UPDATE – REVIEW OF SS COMPONENTS INSTALLED AFTER JANUARY 18, 2009

BACKGROUND

Issues were identified with the Tank Operations Contractor Commercial Grade Dedication (CGD) process. As a result, a justification for continued operation (JCO# TF-09-01) was developed and approved to cover existing safety significant (SS) systems. Management Directive TFC-MD-062, "Interim Direction with Revised Requirements for Procurement of Safety Significant SSCs And Commercial Grade Item Dedication" was issued to address new procurement of SS components however no controls were put in place to ensure that components that had been procured prior to the management directive were installed in an SS application following the JCO (January 18, 2009). Interoffice memo WRPS-0900387 issued March 17, 2009 documents the results of the evaluation of SS components related to the 242-A evaporator campaign and associated transfers that had been installed since the JCO for adequacy of the commercial grade dedication (CGD) packages. This memo documents the results of the evaluation of the balance of the SS components (not included in the previously documented evaluation) installed since the JCO.

EVALUATION

Research was performed to identify all SS components installed since the JCO during the evaluation documented in Interoffice memo WRPS-0900387 however only those components related to the evaporator campaign and associated transfers were evaluated to support the near-term schedule. Since the issuance of memo WRPS-0900387, all work activities have been reviewed for installation of SS components to ensure that no items went unreviewed. All SS components installed since the JCO not included in the initial evaluation are included in this evaluation. CGD packages were compared to the requirements of TFC-ENG-DESIGN-C-15 and TFC-MD-062 for acceptability.

The following SS components were identified with these results:

- SY241-VTP-EF-002 A-Train primary exhauster fan belt. Installed under work package TFC-WO-08-2662 and dedicated with CGI-03060. **The CGI meets the requirements of TFC-ENG-DESIGN-C-15, "Commercial Grade Item Upgrade Dedication" and TFC-MD-062.**

- AN01A-WT-MOV-631 Valve Funnel and Local Position Indicator (the valve itself had already been installed and tested in the jumper assembly prior to the JCO). Installed under work package TFC-WO-08-2887 and dedicated with CGI-03075. **The CGI meets the requirements of TFC-ENG-DESIGN-C-15, "Commercial Grade Item Upgrade Dedication" and TFC-MD-062.** Note that Final Approvals will be obtained after verification of all critical characteristics at completion of work package TFC-WO-08-2887.

- AN01A-WT-MOV-632 Valve Funnel and Local Position Indicator (the valve itself had already been installed and tested in the jumper assembly prior to the JCO). Installed under work package TFC-WO-08-2887 and dedicated with CGI-03073. **The CGI meets the requirements of TFC-ENG-DESIGN-C-15, "Commercial Grade Item Upgrade Dedication" and TFC-MD-062.** Note that Final Approvals will be obtained after verification of all critical characteristics at completion of work package TFC-WO-08-2887.

- AN01A-WT-MOV-634 Valve Funnel and Local Position Indicator (the valve itself had already been installed and tested in the jumper assembly prior to the JCO). Installed under work package TFC-WO-08-2887 and dedicated with CGI-03072. **The CGI meets the requirements of TFC-ENG-DESIGN-C-15, "Commercial Grade Item Upgrade Dedication" and TFC-MD-062.** Note that Final Approvals will be obtained after verification of all critical characteristics at completion of work package TFC-WO-08-2887.

- AN01A-WT-MOV-636 Valve Funnel and Local Position Indicator (the valve itself had already been installed and tested in the jumper assembly prior to the JCO). Installed under work package TFC-WO-08-2887 and dedicated with CGI-03074. **The CGI meets the requirements of TFC-ENG-DESIGN-C-15, "Commercial Grade Item Upgrade Dedication" and TFC-MD-062.** Note that Final Approvals will be obtained after verification of all critical characteristics at completion of work package TFC-WO-08-2887.

- LD Relay (related to the evaporator campaign and associated transfers but installed since the -0900387 memo). Installed under work package TFC-WO-09-1101 and dedicated with CGI-03067. **The CGI meets the requirements of TFC-ENG-DESIGN-C-15, "Commercial Grade Item Upgrade Dedication" and TFC-MD-062.**

CONCLUSION

Engineering has reviewed installation of all SS components since 1/18/09 to ensure that the CGD paperwork is appropriate and acceptable. All SS components have CGDs that were performed in accordance with the commercial grade item upgrade dedication procedure TFC-ENG-DESIGN-C-15 and TFC-MD-062 and are acceptable for use.

For existing SS components installed from this point forward, Management Directive TFC-MD-065, "Point of Use Control for Safety Significant Items and Materials" will be followed. TFC-MD-065 applies to the staging of SS components requiring CGD review and verification of acceptability prior to installation or use.

All future procurements of SS components will meet the requirements of TFC-ENG-DESIGN-C-15, TFC-MD-062, TFC-MD-063, "Procurement of Full, Enhanced or Commercial Quality Items Designated Safety Significant Not Procured from an Evaluated Supplier – Additional Signatures", and TFC-MD-064, "NQA-1 Commercial Grade Item Definition." The management directives referred to in this memo will remain in effect until the applicable procedures are revised to incorporate the revised requirements.

REM:JLM

cc: M. N. Brosee
H. S. Berman
D. M. Cato
E. A. Nelson
V. L. Wagner
File/LB

Message

From: Owen, Annette
Sent: Friday, April 24, 2009 4:51 PM
To: ^WRPS Corrective Action Group
Subject: FW: WRPS-PER-2009-0387 EXTENSION REQUEST

From: Maciuca, Constantin
Sent: Friday, April 24, 2009 1:33 PM
To: Owen, Annette
Subject: RE: WRPS-PER-2009-0387 EXTENSION REQUEST

Annette,

Please extend as requested.

Thanks,

Tino

From: Owen, Annette
Sent: Friday, April 24, 2009 11:20 AM
To: Maciuca, Constantin
Subject: FW: WRPS-PER-2009-0387 EXTENSION REQUEST

This request is for a PER with Resolution with no CAs launched as of yet.

http://tfc.rl.gov/per/index.cfm?page=main.cfm&perid=29635

Annette

From: Littlejohn, Susan M
Sent: Friday, April 24, 2009 11:14 AM
To: ^WRPS Corrective Action Group
Cc: Cato, Diane M; Owen, Annette
Subject: WRPS-PER-2009-0387 EXTENSION REQUEST

Please extend the subject PER to May 15, 2009.

Additional time needed to complete the documented causal analysis and coordinate it with an additional root cause committed to in the response to DOE.

Manager: Diane Cato

Sue Littlejohn
Central Design Authority & Standards, WRPS

PH: 509-376-2931
CELL: 509-205-9426

Message

From: Steelman, Tracy L
Sent: Wednesday, March 18, 2009 8:36 AM
To: Anderson, Craig E; Glaman, Linda
Subject: FW: WRPS-PER-2009-0387
Importance: High
Follow Up Flag: Follow up
Flag Status: Orange

I have added a copy of this e-mail to Sig PER 2008-0279. Linda, you should add it to 2009-0387. Thanks!

From: Anderson, Craig E
Sent: Tuesday, March 17, 2009 2:45 PM
To: Cato, Diane M; Roberts, Mark A
Cc: Steelman, Tracy L; Glaman, Linda; Maciuca, Constantin
Subject: WRPS-PER-2009-0387
Importance: High

Diane,

As you are well aware, WRPS-PER-2009-0387 was written and assigned to you to address the issue of material disposition for items that were not appropriately addressed by the causal analysis for WRPS-PER-2008-0279. A corrective action(s) needs to be developed to be added to that causal analysis to provide material disposition. This addition can be done by preparing a SPER/Corrective Action/End Point Assessment, Extension/Change/Transfer Request (A-6003-0543) to be approved by the Responsible Manager for WRPS-PER-2008-0279 (Mark Knight/Mark Roberts), Fred Beranek and me; the corrective action(s) needs to be added to the Noncompliance Tracking System Report (NTS-ORP--WRPS-TANKFARM-2008-0001), and form A-6003-0543 is the vehicle for doing so.

Unless directed by the ESRB to do so, I would not add corrective actions to the NTS Report that are developed to address why the causal analysis did not appropriately address material disposition. That is an issue separate from the WRPS-PER-2008-0279, and not in itself NTS reportable.

If you have any questions, please contact me at 2-3940.

Craig Anderson

Message

From: Maciuca, Constantin
Sent: Thursday, May 21, 2009 8:25 AM
To: Littlejohn, Susan M; ^WRPS Corrective Action Group
Cc: Silvia, Michael J (Mike); Faust, Gary L; Cato, Diane M
Subject: RE: WRPS-PER-2009-0387 EXTENSION

Extension granted as requested.

Tino Maciuca, Manager
Performance Assurance & CAM
509-373-6334
509-438-9519 (cell)

From: Littlejohn, Susan M
Sent: Thursday, May 21, 2009 7:55 AM
To: Maciuca, Constantin; ^WRPS Corrective Action Group
Cc: Silvia, Michael J (Mike); Faust, Gary L; Cato, Diane M
Subject: RE: WRPS-PER-2009-0387 EXTENSION

Please extend the subject PER to June 15, 2009.

Focus on other related tasks to Commercial Grade Dedication have impacted the ability to complete this task.

Thank you

Sue Littlejohn
Central Design Authority & Standards, WRPS
PH: 509-376-2931
CELL: 509-205-9426

Message

From: Anderson, Craig E
Sent: Tuesday, March 17, 2009 2:45 PM
To: Cato, Diane M; Roberts, Mark A
Cc: Steelman, Tracy L; Glaman, Linda; Maciuca, Constantin
Subject: WRPS-PER-2009-0387
Importance: High
Follow Up Flag: Follow up
Flag Status: Orange

Diane,

As you are well aware, WRPS-PER-2009-0387 was written and assigned to you to address the issue of material disposition for items that were not appropriately addressed by the causal analysis for WRPS-PER-2008-0279. A corrective action(s) needs to be developed to be added to that causal analysis to provide material disposition. This addition can be done by preparing a SPER/Corrective Action/End Point Assessment, Extension/Change/Transfer Request (A-6003-0543) to be approved by the Responsible Manager for WRPS-PER-2008-0279 (Mark Knight/Mark Roberts), Fred Beranek and me; the corrective action(s) needs to be added to the Noncompliance Tracking System Report (NTS-ORP--WRPS-TANKFARM-2008-0001), and form A-6003-0543 is the vehicle for doing so.

Unless directed by the ESRB to do so, I would not add corrective actions to the NTS Report that are developed to address why the causal analysis did not appropriately address material disposition. That is an issue separate from the WRPS-PER-2008-0279, and not in itself NTS reportable.

If you have any questions, please contact me at 2-3940.

Craig Anderson

Save

Problem Evaluation Request (PER)

WRPS-PER-2009-0420
Closed 03/25/2009 07:45

PER No	Date of Discovery	Time of Discovery (24:00)	Project
WRPS-PER-2009-0420	03/17/2009	13:05	Radcon-BO

Location

B Farm

How Was Problem Discovered

DOE-ORP

Description of Concern or Problem

It was reported in DOE-ORP Operational Awareness Report #5922 dated 3/12/2009 that on 3/11/2009,

Finding: "Radiological Buffer Area signs at 241-B and 241-BY are not correctly posted." It was identified that:

1) the west vehicle gate at 241-B Farm has only one of three signs indicating that an exit survey is required; and,
2) the east side of 241-BY has only three of four RBA signs indicating that an exit survey is required.

Requirement Not Satisfied	Source Document Number

Equipment Identification Number	System Identification

Immediate actions Taken or Planned

Base Ops RadCon manager notified
Base Ops RadCon personnel requested to submit PER

Recommended Corrective actions

Assign PER to B/BY facility owner as a TUF to upgrade posting as needed.

Originator Contact

Please contact me if you have specific questions.

Originators Name	Originators ID	Originators Phone	Date Initiated
Bickel, Eric E	H3764153	(509) 372-1470	03/17/2009

SHIFT OPERATIONS REVIEW

Title

DOE-ORP Operational Awareness Report #5922

How Discovered	Agency
FACREP Surveillance	

Reportability	SSC Operability	Operability Review	Comp Measures Req
Non-Reportable	N/A	N/A	

Describe actions Taken or Recommended

Forward PER to Facilities Management. No additional Base Ops Shift Office actions required at this time.

SO Reviewer Name	SO Reviewer ID	SO Reviewer Phone	SO Review Date
Johnson, Brian A	H0003531	(509) 373-2696	03/17/2009

SCREENING

PER Significance Level	
TUF	

Independent Assessment Review	Occurrence Report Number	Externally Identified	
No		Yes	

Assigned Responsible	Facilities Rep / SSO	Safety Management Rep	

Manager			
Brown, David W			
Program		**Safety Management Program**	
• N/A		• Radiological Control	
PER Screening Comments			
Confirm that the Radiological Buffer Area signs are correct. See attached e-mail message. (Nancy Brown 03/18/09)			
Causal Code			
MGT/Comm/Train	**Human Performance**	**GEMS**	**Equip/Eng/Other**
Failed Barrier	**ORPS Code**	**Functional Area**	**Work Process**
	Not Applicable	Radiation Protection	• Radiological Posting
ISMS	**Consequence Code**		
Perform work within the controls	• Rad Posting - Incorrect - Wrong TFRCM required sign		
PER Screening Chair	**PER Screening Chair ID**	**PER Screening Chair Phone**	**PER Screening Date**
Brown, Nancy L	H0088797	(509) 373-0992	03/18/2009
PAAA REVIEW			
PAAA Screening	**PAAA Codes**	**Function Codes**	
PAAA, Non-NTS Reportable	• 10 CFR 835.601 (b)	• RadCon Posting and Labeling	
NTS Report Number	**NTS Report Date**		
Repetitive / Recurrent	**Programmatic**	**Intentional Violation / Misrepresentation**	
No	No	No	
PAAA Screening Comments			
PAAA Reviewer Name	**PAAA Review Date**		
Anderson, Craig E	03/18/2009		
PAAA Approver Name	**PAAA Approve Date**		
Anderson, Craig E	03/19/2009		
SENIOR MANAGEMENT REVIEW/CONCURRENCE			
TF Operations Morning Leadership Call			
TF Operations Morning Leadership Call is no longer required.			
Instructions for Responsible Manager			
Review the PER and determine action required. Complete action and enter statement on TUF tab. 'Complete' the task in E-STARS and 'Close' in accordance with TFC-ESHQ-Q_C-C-01, Problem Evaluation Request.			
Senior Management	**Sr Mgmt ID**	**Sr Mgmt Phone**	**Sr Mgmt Review Date**
Owen, Annette	H0054042	(509) 372-0533	03/19/2009
Track Until Fixed (TUF)			
Action Taken			
The signs have been replace with correct signs. See attached.			
ATTACHMENTS			
FW_ DOE Observation PER Emailing_ PER_htm.msg			
IDMS Archive Link			
Link to PER			

OP Awareness #5922.pdf		
RE B-BY Sign PER PER.htm.htm		
RE B-BY Sign PER PER.htm.htm		
AUDIT HISTORY		
Change Date	**Auditor**	**Comments**
03/18/2009 11:30	Brown, Nancy L	'Description of Concern or Problem' was changed to add "Finding" with the concurrence of the PER originator.
03/18/2009 13:26	Brown, Nancy L	'PER Screening Comments' was changed.
03/19/2009 08:07	Owen, Annette	Responsible Manager Task Launched by Owen, Annette

-- End of Report --
07/09/2009 10:21 AM

Task# WRPS-PER-2009-0420

E-STARS[R] Report
Task Detail Report
07/09/2009 1022

TASK INFORMATION			
Task#	WRPS-PER-2009-0420		
Subject	TUF; DOE-ORP Operational Awareness Report #5922		
Parent Task#		**Status**	CLOSED 03/25/2009
Reference		**Due**	07/19/2009
Originator	^PER Coordinator	**Priority**	Medium
Originator Phone		**Category**	PER
Origination Date	03/17/2009 1342	**Generic1**	None
Remote Task#		**Generic2**	None
Deliverable	PER Review	**Generic3**	None
Class	None	**View Permissions**	Global
Instructions	*No Instructions*		

ROUTING LISTS

1	Responsible Manager	Inactive
	Review the PER and determine action required. Complete action and enter statement on TUF tab. 'Complete' the task in E-STARS and 'Close' in accordance with TFC-ESHQ-Q_C-C-01, Problem Evaluation Request.	
	• Brown, David W - Assign - Completed with comments - 03/25/2009 0731 *Instructions:*	
	• Brown, David W - Assign - Completed with comments - 03/25/2009 0739 *Instructions:* Did you contact the originator about the PER? Document your contact in the response window.	
	• Brown, David W - Close - Closed with comments - 03/25/2009 0740 *Instructions:* Verify the TUF Tab and close the task when complete	
2	Review Initial PER	Inactive
	Review New PER	
	• ^SO(Johnson, Brian A) - Review - Concur - 03/17/2009 2142 *Instructions:*	
	• ^PER Screening(Brown, Nancy L) - Review - Concur - 03/18/2009 1326 *Instructions:*	
	• ^Mgr Review(Owen, Annette) - Review - Concur - 03/19/2009 0807 *Instructions:*	

ATTACHMENTS

Attachments	1. FW_ DOE Observation PER Emailing_ PER_htm.msg 2. IDMS Archive Link 3. Link to PER 4. OP Awareness #5922.pdf 5. RE B-BY Sign PER PER.htm.htm 6. RE B-BY Sign PER PER.htm.htm

COMMENTS

Poster	Brown, David W - 03/25/2009 0731
	Completed

Task# WRPS-PER-2009-0420			
	Signs have been replaced with correct signs. See attached e-mail.		
Poster	Brown, David W - 03/25/2009 0739		
	Completed		
	Signs have been replaced with correct signs.		
Poster	Brown, David W - 03/25/2009 0740		
	CLOSED		
	Signs have been replaced with correct signs.		
TASK DUE DATE HISTORY			
Modified	03/19/2009 0807 - ^PER Coordinator	**New Due Date**	07/15/2009 1630
Modified	03/19/2009 0807 - ^PER Coordinator	**New Due Date**	07/19/2009 1630
Modified	03/17/2009 1342 - ^PER Coordinator	**New Due Date**	03/19/2009 1630
SUB TASK HISTORY			
No Subtasks			

-- end of report --

Department of Energy
Operational Awareness

OpAware: Project/Issue Detail

Tank Farms

Richard Jansons		Cross	
Rpt #:	Date Entered:	Date Observed:	Hours in Field:
5922	03/12/2009	03/11/2009	6 hours

Entry Type: Routine Oversight

Include in CIR: No

Title:

RadCon walkdown of Tank Farm facilities

Summary:

On March 11, 2009, I conducted a field walk down of radiological conditions at various Tank Farms and noted the following:

Finding: Radiological survey maps are not maintained as required at C Farm Change trailer.

Requirements:

TFRCM Article 551.10: "Results of current surveys or survey maps should be conspicuously posted to inform personnel of the radiological conditions."

TFC-ESHQ-RP_MON-P-10, "Required Radiological Surveillances," Rev. D-8, Section 4.3 step 2:
"Ensure status maps are maintained current and contain sufficient information to allow non-facility emergency responders to evaluate the radiological hazards in the facility."

TFC-ESHQ-RP_MON-P-10, "Required Radiological Surveillances," Rev. D-8, Section 4.3 step 6:
"Update the survey map with the following information, as applicable: (7.1.1.d)
- General area dose rates.
- High and very high radiation areas.
- Hot spot dose rates.
- Contamination levels.
- High contamination areas.
- Airborne radioactivity areas.
- Date of last survey and surveyor's name(s) is be included.
- A legend to interpret symbols or data presented."

Discussion:

The following issues were noted with the radiological status map at the C Farm Change trailer:
- The radiological status map at the C Farm Change trailer was found to have no notation of any High Radiation Areas, although a dose rate of 100 mrem/hr was noted on the map.
- No contamination levels were provided on the survey map, although the entire C Farm area is posted at least as a Contamination Area, with some smaller areas posted as a High Contamination Area.
- The legend on the map is covered by tape containing the name and date of the last survey. It appears from the legend that any markings made in blue (there were none present on the map) indicate contamination levels; markings made in red are dose rates at a distance of 30 cm.
- It is unclear from the map whether dose rates are at 30 cm or contact. There are two "red" numbers present in pairs on the maps, with no indication from the legend or other source if one is meant to be a contact dose rate.
- No area boundaries or indications of the extent of radiological postings are present on the map. There is an indication that one area of C Farm is posted "ARA" but no boundary of the ARA is provided on the status map. Only the letters "ARA" are written on the map.
- No hot spots were identified on the map.

Finding: Airflow is not controlled from areas of lesser to greater removable contamination in the C Farm Egress Tent.

Requirement:

TFRCM Article 337.3: "Control and direct airflow from areas of lesser to greater removable contamination."

Discussion:

On March 11, 2009, a propane heater with two exhaust trunks was found in the C Farm Egress Tent, with one exhaust hose in the Radiological Buffer Area (RBA) for Contamination Control, and the other exhaust hose in the Contamination Area/RBA Boundary. Both exhaust hoses could have been located in the radiologically clean area of the egress tent.

Finding: Radiological Buffer Area signs at 241-B and 241-BY are not correctly posted.

Discussion:

Two Radiological Buffer Areas for contamination control were not completely posted with RBA signs indicating "exit survey required." The west vehicle gate at 241-B Farm is a RBA for contamination control. Only 1 of 3 RBA signs indicated "exit survey required." The RBA for contamination control on the east side of 241-BY contains 3 of 4 RBA signs indicating "exit survey required."

Two other observed issues:

1. The WIDS Site 200-W-54 located on the East side of S Farm Complex is a large posted Contamination Area. Approximately 50 feet of the rope and Contamination Area signs on the south side of the WIDS site was not in place. I immediately notified the Base Operations Radiological Control Manager for corrective action.

2. At MO-296 north of the S Farm Complex, a large amount of tumbleweeds had blown into a posted Contamination Area. I immediately notified the Base Operations Radiological Control Manager for corrective action.

All of these issues were communicated to WRPS Radiological Control management for review and action.

From: Mckenzie, Gordon S
Sent: Tuesday, March 24, 2009 4:24 PM
To: Brown, David W
Subject: RE: B-BY Sign PER: PER.htm
Yes, the sign painter with HPT support fixed the issue at BY and B farm RBAs this morning.
Thanks
Gordon

From: Brown, David W
Sent: Tuesday, March 24, 2009 3:57 PM
To: Mckenzie, Gordon S
Cc: Brown, David W; Jacobs, Nancy L
Subject: FW: B-BY Sign PER: PER.htm
Importance: High

Gordon,

Just a reminder you were going to respond to this e-mail that these are done so I can close my PER.

Dave Brown

Facility Manager
Office 376-0106
Cell 539-8559

From: Brown, David W
Sent: Monday, March 23, 2009 8:14 AM
To: Carrothers, Bradley M; Mckenzie, Gordon S
Cc: Brown, David W
Subject: B-BY Sign PER: PER.htm

Did these get fixed last week?

Save

Problem Evaluation Request (PER) **WRPS-PER-2009-0420**
In Process/Work

PER No	Date of Discovery	Time of Discovery (24:00)	Project
WRPS-PER-2009-0420	03/17/2009	13:05	Radcon-BO

Location

B Farm

How Was Problem Discovered

DOE-ORP

Description of Concern or Problem

It was reported in DOE-ORP Operational Awareness Report #5922 dated 3/12/2009 that on 3/11/2009,

Finding: "Radiological Buffer Area signs at 241-B and 241-BY are not correctly posted." It was identified that:

1) the west vehicle gate at 241-B Farm has only one of three signs indicating that an exit survey is required; and,
2) the east side of 241-BY has only three of four RBA signs indicating that an exit survey is required.

Requirement Not Satisfied	Source Document Number

Equipment Identification Number	**System Identification**

Immediate actions Taken or Planned

Base Ops RadCon manager notified
Base Ops RadCon personnel requested to submit PER

Recommended Corrective actions

Assign PER to B/BY facility owner as a TUF to upgrade posting as needed.

Originator Contact

Please contact me if you have specific questions.

Originators Name	Originators ID	Originators Phone	Date Initiated
Bickel, Eric E	H3764153	(509) 372-1470	03/17/2009

SHIFT OPERATIONS REVIEW

Title

DOE-ORP Operational Awareness Report #5922

How Discovered	Agency
FACREP Surveillance	

Reportability	SSC Operability	Operability Review	Comp Measures Req
Non-Reportable	N/A	N/A	

Describe actions Taken or Recommended

Forward PER to Facilities Management. No additional Base Ops Shift Office actions required at this time.

SO Reviewer Name	SO Reviewer ID	SO Reviewer Phone	SO Review Date
Johnson, Brian A	H0003531	(509) 373-2696	03/17/2009

SCREENING

PER Significance Level	
TUF	

Independent Assessment Review	Occurrence Report Number	Externally Identified	
No		Yes	
Assigned Responsible Manager	**Facilities Rep / SSO**	**Safety Management Rep**	
Brown, David W			

Program	Safety Management Program
• N/A	• Radiological Control

PER Screening Comments

Confirm that the Radiological Buffer Area signs are correct. See attached e-mail message.
(Nancy Brown 03/18/09)

Causal Code

MGT/Comm/Train	**Human Performance**	**GEMS**	**Equip/Eng/Other**
Failed Barrier	**ORPS Code**	**Functional Area**	**Work Process**
	Not Applicable	Radiation Protection	• Radiological Posting
ISMS	**Consequence Code**		
Perform work within the controls	• Rad Posting - Incorrect - Wrong TFRCM required sign		
PER Screening Chair	**PER Screening Chair ID**	**PER Screening Chair Phone**	**PER Screening Date**

Brown, Nancy L	H0088797	(509) 373-0992	03/18/2009
PAAA REVIEW			
PAAA Screening	**PAAA Codes**	**Function Codes**	
PAAA, Non-NTS Reportable	• 10 CFR 835.601 (b)	• RadCon Posting and Labeling	
NTS Report Number	**NTS Report Date**		
Repetitive / Recurrent	**Programmatic**	**Intentional Violation / Misrepresentation**	
No	No	No	
PAAA Screening Comments			
PAAA Reviewer Name	**PAAA Review Date**		
Anderson, Craig E	03/18/2009		
PAAA Approver Name	**PAAA Approve Date**		
Anderson, Craig E	03/19/2009		
SENIOR MANAGEMENT REVIEW/CONCURRENCE			
TF Operations Morning Leadership Call			
TF Operations Morning Leadership Call is no longer required.			
Instructions for Responsible Manager			
Review the PER and determine action required. Complete action and enter statement on TUF tab. 'Complete' the task in E-STARS and 'Close' in accordance with TFC-ESHQ-Q_C-C-01, Problem Evaluation Request.			
Senior Management	**Sr Mgmt ID**	**Sr Mgmt Phone**	**Sr Mgmt Review Date**
Owen, Annette	H0054042	(509) 372-0533	03/19/2009
Track Until Fixed (TUF)			
Action Taken			
ATTACHMENTS			
FW_ DOE Observation PER Emailing_ PER_htm.msg			
Link to PER			
OP Awareness #5922.pdf			
AUDIT HISTORY			
Change Date	**Auditor**	**Comments**	
03/18/2009 11:30	Brown, Nancy L	'Description of Concern or Problem' was changed to add "Finding" with the concurrence of the PER originator.	
03/18/2009 13:26	Brown, Nancy L	'PER Screening Comments' was changed.	
03/19/2009 08:07	Owen, Annette	Responsible Manager Task Launched by Owen, Annette	

-- End of Report --
03/23/2009 08:13 AM

From: Mckenzie, Gordon S
Sent: Tuesday, March 24, 2009 4:24 PM
To: Brown, David W
Subject: RE: B-BY Sign PER: PER.htm
Yes, the sign painter with HPT support fixed the issue at BY and B farm RBAs this morning.
Thanks
Gordon

From: Brown, David W
Sent: Tuesday, March 24, 2009 3:57 PM
To: Mckenzie, Gordon S
Cc: Brown, David W; Jacobs, Nancy L
Subject: FW: B-BY Sign PER: PER.htm
Importance: High

Gordon,

Just a reminder you were going to respond to this e-mail that these are done so I can close my PER.

Dave Brown

Facility Manager
Office 376-0106
Cell 539-8559

From: Brown, David W
Sent: Monday, March 23, 2009 8:14 AM
To: Carrothers, Bradley M; Mckenzie, Gordon S
Cc: Brown, David W
Subject: B-BY Sign PER: PER.htm

Did these get fixed last week?

Save

Problem Evaluation Request (PER) **WRPS-PER-2009-0420**
In Process/Work

PER No	Date of Discovery	Time of Discovery (24:00)	Project
WRPS-PER-2009-0420	03/17/2009	13:05	Radcon-BO
Location			
B Farm			
How Was Problem Discovered			
DOE-ORP			
Description of Concern or Problem			
It was reported in DOE-ORP Operational Awareness Report #5922 dated 3/12/2009 that on 3/11/2009, Finding: "Radiological Buffer Area signs at 241-B and 241-BY are not correctly posted." It was identified that: 1) the west vehicle gate at 241-B Farm has only one of three signs indicating that an exit survey is required; and, 2) the east side of 241-BY has only three of four RBA signs indicating that an exit survey is required.			
Requirement Not Satisfied		**Source Document Number**	

Equipment Identification Number	**System Identification**

Immediate actions Taken or Planned

Base Ops RadCon manager notified
Base Ops RadCon personnel requested to submit PER

Recommended Corrective actions

Assign PER to B/BY facility owner as a TUF to upgrade posting as needed.

Originator Contact

Please contact me if you have specific questions.

Originators Name	Originators ID	Originators Phone	Date Initiated
Bickel, Eric E	H3764153	(509) 372-1470	03/17/2009

SHIFT OPERATIONS REVIEW

Title

DOE-ORP Operational Awareness Report #5922

How Discovered	Agency
FACREP Surveillance	

Reportability	SSC Operability	Operability Review	Comp Measures Req
Non-Reportable	N/A	N/A	

Describe actions Taken or Recommended

Forward PER to Facilities Management. No additional Base Ops Shift Office actions required at this time.

SO Reviewer Name	SO Reviewer ID	SO Reviewer Phone	SO Review Date
Johnson, Brian A	H0003531	(509) 373-2696	03/17/2009

SCREENING

PER Significance Level	
TUF	

Independent Assessment Review	Occurrence Report Number	Externally Identified	
No		Yes	
Assigned Responsible Manager	**Facilities Rep / SSO**	**Safety Management Rep**	
Brown, David W			

Program	Safety Management Program
• N/A	• Radiological Control

PER Screening Comments

Confirm that the Radiological Buffer Area signs are correct. See attached e-mail message.
(Nancy Brown 03/18/09)

Causal Code

MGT/Comm/Train	**Human Performance**	**GEMS**	**Equip/Eng/Other**
Failed Barrier	**ORPS Code**	**Functional Area**	**Work Process**
	Not Applicable	Radiation Protection	• Radiological Posting
ISMS	**Consequence Code**		
Perform work within the controls	• Rad Posting - Incorrect - Wrong TFRCM required sign		
PER Screening Chair	**PER Screening Chair ID**	**PER Screening Chair Phone**	**PER Screening Date**

Brown, Nancy L	H0088797	(509) 373-0992	03/18/2009
PAAA REVIEW			
PAAA Screening	**PAAA Codes**	**Function Codes**	
PAAA, Non-NTS Reportable	• 10 CFR 835.601 (b)	• RadCon Posting and Labeling	
NTS Report Number	**NTS Report Date**		
Repetitive / Recurrent	**Programmatic**	**Intentional Violation / Misrepresentation**	
No	No	No	
PAAA Screening Comments			
PAAA Reviewer Name	**PAAA Review Date**		
Anderson, Craig E	03/18/2009		
PAAA Approver Name	**PAAA Approve Date**		
Anderson, Craig E	03/19/2009		
SENIOR MANAGEMENT REVIEW/CONCURRENCE			
TF Operations Morning Leadership Call			
TF Operations Morning Leadership Call is no longer required.			
Instructions for Responsible Manager			
Review the PER and determine action required. Complete action and enter statement on TUF tab. 'Complete' the task in E-STARS and 'Close' in accordance with TFC-ESHQ-Q_C-C-01, Problem Evaluation Request.			
Senior Management	**Sr Mgmt ID**	**Sr Mgmt Phone**	**Sr Mgmt Review Date**
Owen, Annette	H0054042	(509) 372-0533	03/19/2009
Track Until Fixed (TUF)			
Action Taken			
ATTACHMENTS			
FW_ DOE Observation PER Emailing_ PER_htm.msg			
Link to PER			
OP Awareness #5922.pdf			
AUDIT HISTORY			
Change Date	**Auditor**	**Comments**	
03/18/2009 11:30	Brown, Nancy L	'Description of Concern or Problem' was changed to add "Finding" with the concurrence of the PER originator.	
03/18/2009 13:26	Brown, Nancy L	'PER Screening Comments' was changed.	
03/19/2009 08:07	Owen, Annette	Responsible Manager Task Launched by Owen, Annette	

-- End of Report --
03/23/2009 08:13 AM

Message

From: Brown, David W
Sent: Tuesday, March 17, 2009 3:22 PM
To: Brown, Nancy L
Cc: Bickel, Eric E
Subject: FW: DOE Observation PER Emailing: PER.htm

Nancy,

This PER should be in screening tomorrow. I am having these fixed tomorrow during our current B complex maintenance campaign. You can assign as a TUF to me or attach this e-mail showing action being taken.

Dave Brown

Facility Manager
Office 376-0106
Cell 539-8559

From: Brown, David W
Sent: Tuesday, March 17, 2009 3:15 PM
To: Peoples, C W (Chuck)
Cc: Brown, David W
Subject: DOE Observation PER Emailing: PER.htm

Chuck,

Can you have these posting issues fixed when doing the housekeeping tomorrow at B and BY farms and let me know they are done.

Thank you
Dave

Problem Evaluation Request (PER)

WRPS-PER-200
In Pro

PER No	Date of Discovery	Time of Discovery (24:00)	Project
WRPS-PER-2009-0420	03/17/2009	13:05	Radcon-BO

Location

B Farm

How Was Problem Discovered

DOE-ORP

Description of Concern or Problem

It was reported in DOE-ORP Operational Awareness Report #5922 dated 3/12/2009 that on 3/11/2009, that the "Radiological Buffer Area signs at 241-B and 241-BY are not correctly posted." It was identified that:

1) the west vehicle gate at 241-B Farm has only one of three signs indicating that an exit survey is required; and,
2) the east side of 241-BY has only three of four RBA signs indicating that an exit survey is required.

Requirement Not Satisfied	Source Document Number

Equipment Identification Number		**System Identification**	
Immediate actions Taken or Planned			
Base Ops RadCon manager notified Base Ops RadCon personnel requested to submit PER			
Recommended Corrective actions			
Assign PER to B/BY facility owner as a TUF to upgrade posting as needed.			
Originator Contact			
Please contact me if you have specific questions.			
Originators Name	**Originators ID**	**Originators Phone**	**Date Initiated**
Bickel, Eric E	H3764153	(509) 372-1470	03/17/2009
SHIFT OPERATIONS REVIEW			
Title			
How Discovered		**Agency**	
Reportability	**SSC Operability**	**Operability Review**	**Comp Measures Req**
Describe actions Taken or Recommended			
SO Reviewer Name	**SO Reviewer ID**	**SO Reviewer Phone**	**SO Review Date**
		() -	
SCREENING			
PER Significance Level			
Independent Assessment Review	**Occurrence Report Number**	**Externally Identified**	
No		No	
Assigned Responsible Manager	**Facilities Rep / SSO**	**Safety Management Rep**	
Program		**Safety Management Program**	
PER Screening Comments			
Causal Code			
MGT/Comm/Train	**Human Performance**	**GEMS**	**Equip/Eng/Other**
Failed Barrier	**ORPS Code**	**Functional Area**	**Work Process**
ISMS	**Consequence Code**		
PER Screening Chair	**PER Screening Chair ID**	**PER Screening Chair Phone**	**PER Screening Date**

		() -	
PAAA REVIEW			
PAAA Screening	**PAAA Codes**	**Function Codes**	
NTS Report Number	**NTS Report Date**		
Repetitive / Recurrent	**Programmatic**	**Intentional Violation / Misrepresentation**	
No	No	No	
PAAA Screening Comments			
PAAA Reviewer Name	**PAAA Review Date**		
PAAA Approver Name	**PAAA Approve Date**		
SENIOR MANAGEMENT REVIEW/CONCURRENCE			
TF Operations Morning Leadership Call			
Instructions for Responsible Manager			
Senior Management	**Sr Mgmt ID**	**Sr Mgmt Phone**	**Sr Mgmt Review Date**
ATTACHMENTS			
Link to PER			
OP Awareness #5922.pdf			

-- End of Report --
03/17/2009 03:14 PM

Save

Problem Evaluation Request (PER)

WRPS-PER-2009-0421
Closed 03/23/2009 09:00

PER No	Date of Discovery	Time of Discovery (24:00)	Project
WRPS-PER-2009-0421	03/17/2009	13:45	Base Ops

Location

S Farm

How Was Problem Discovered

DOE-ORP

Description of Concern or Problem

It was reported in DOE-ORP Operational Awareness Report #5922 dated 3/12/2009 that on 3/11/2009:

Observed Issue: "WIDS site 200-W-54 located on the east side of the S Farm Complex...(has) approximately 50 feet of the rope and Contamination Area signs on the south side...not in place."

Requirement Not Satisfied	Source Document Number

Equipment Identification Number	System Identification

Immediate actions Taken or Planned

Base Ops RadCon Manager notified
Base Ops RadCon personnel requested to write PER

Recommended Corrective actions

Assign PER to the S tank farm facility manager as a TUF to ensure that the area posting is re-established.

Originator Contact

Please contact me if you have specific questions.

Originators Name	Originators ID	Originators Phone	Date Initiated
Bickel, Eric E	H3764153	(509) 372-1470	03/17/2009

SHIFT OPERATIONS REVIEW

Title

DOE-ORP Operational Awareness Report #5922

How Discovered	Agency
FACREP Surveillance	

Reportability	SSC Operability	Operability Review	Comp Measures Req
Non-Reportable	N/A	N/A	

Describe actions Taken or Recommended

Forward PER to Facilities Management. No additional Base Ops Shift Office actions required at this time.

SO Reviewer Name	SO Reviewer ID	SO Reviewer Phone	SO Review Date
Johnson, Brian A	H0003531	(509) 373-2696	03/17/2009

SCREENING

PER Significance Level			
Trend Only			
Independent Assessment Review	**Occurrence Report Number**	**Externally Identified**	
No		Yes	
Assigned Responsible Manager	**Facilities Rep / SSO**	**Safety Management Rep**	
Ficklin, Jim			

Program	Safety Management Program
• N/A	• Radiological Control

PER Screening Comments

No comments
(Nancy Brown 03/18/09)

RE-SCREEN COMMENTS (Prior to Launch): Jim Ficklin: If possible, please hold-off on screening 0421 . . . that particular WIDS Site is comprised of a multitude of different posted areas along the backside of S/SX/SY. I'll go over tomorrow and figure out where it is.

Message from Dave Brown: Jim Ficklin reported that all of the rad boundaries are up in this WIDS area. He recommends that no further action is needed.

RE-SCREENING COMMENTS: Change from TUF to TREND ONLY. Remains assigned to Jim Ficklin. All the Rad boundaries are up in the WIDS area. No further action required.
(Nancy Brown 03/19/09)

Causal Code

MGT/Comm/Train	**Human Performance**	**GEMS**	**Equip/Eng/Other**
Failed Barrier	**ORPS Code**	**Functional Area**	**Work Process**
	Not Applicable	Radiation Protection	• Radiological Posting
ISMS	**Consequence Code**		
Perform work within the controls	• Rad Posting - Barriers Down - Rad rope/chain down		
PER Screening Chair	**PER Screening Chair ID**	**PER Screening Chair Phone**	**PER Screening Date**
Brown, Nancy L	H0088797	(509) 373-0992	03/18/2009

PAAA REVIEW

PAAA Screening	**PAAA Codes**	**Function Codes**	
PAAA, Non-NTS Reportable	• 10 CFR 835.601 (a)	• RadCon Posting and Labeling	
NTS Report Number	**NTS Report Date**		
Repetitive / Recurrent	**Programmatic**	**Intentional Violation / Misrepresentation**	
No	No	No	

PAAA Screening Comments

PAAA Reviewer Name	**PAAA Review Date**	
Anderson, Craig E	03/18/2009	
PAAA Approver Name	**PAAA Approve Date**	
Anderson, Craig E	03/19/2009	

SENIOR MANAGEMENT REVIEW/CONCURRENCE

TF Operations Morning Leadership Call

TF Operations Morning Leadership Call is no longer required.

Instructions for Responsible Manager

Senior Management	**Sr Mgmt ID**	**Sr Mgmt Phone**	**Sr Mgmt Review Date**
Owen, Annette	H0054042	(509) 372-0533	03/23/2009

ATTACHMENTS

Link to PER

OP Awareness #5922.pdf

AUDIT HISTORY		
Change Date	**Auditor**	**Comments**
03/18/2009 11:36	Brown, Nancy L	'Description of Concern or Problem' was changed -- added "Observed Issue" with the concurrence of the PER originator
03/18/2009 16:09	Brown, Nancy L	'PER Screening Comments' was changed.
03/19/2009 10:48	Brown, Nancy L	'PER Significance Level' was changed from TUF to Trend Only. 'PER Screening Comments' was changed.
03/19/2009 11:45	Brown, Nancy L	'Selected Consequence Codes' have changed.
03/19/2009 13:02	Brown, Nancy L	'PER Screening Comments' was changed.

-- End of Report --
03/23/2009 09:15 AM

Task# WRPS-PER-2009-0421			
E-STARS[R] Report Task Detail Report 03/23/2009 0915			
TASK INFORMATION			
Task#	WRPS-PER-2009-0421		
Subject	Trend; DOE-ORP Operational Awareness Report #5922		
Parent Task#		Status	CLOSED 03/23/2009
Reference		Due	03/19/2009
Originator	^PER Coordinator	Priority	Medium
Originator Phone		Category	PER
Origination Date	03/17/2009 1349	Generic1	None
Remote Task#		Generic2	None
Deliverable	PER Review	Generic3	None
Class	None	View Permissions	Global
Instructions	*No Instructions*		
ROUTING LISTS			
1	Review Initial PER		Inactive
	Review New PER		
	• ^SO(Johnson, Brian A) - Review - Concur - 03/17/2009 2141 *Instructions:*		
	• ^PER Screening(Brown, Nancy L) - Review - Concur - 03/18/2009 1328 *Instructions:*		
	• ^Mgr Review - Review - Withdrawn - 03/18/2009 1611 *Instructions:*		
	• ^PER Screening(Brown, Nancy L) - Review - Concur - 03/19/2009 1302 *Instructions:*		
	• ^Mgr Review(Owen, Annette) - Review - Concur - 03/23/2009 0804 *Instructions:*		
ATTACHMENTS			
Attachments	1. Link to PER 2. OP Awareness #5922.pdf		
COMMENTS			
No Comments			

Task# WRPS-PER-2009-0421			
TASK DUE DATE HISTORY			
Modified	03/17/2009 1350 - ^PER Coordinator	New Due Date	03/19/2009 1630
SUB TASK HISTORY			
No Subtasks			
-- end of report --			

Department of Energy
Operational Awareness

OpAware: Project/Issue Detail

Tank Farms

Richard Jansons		Cross	
Rpt #:	Date Entered:	Date Observed:	Hours in Field:
5922	03/12/2009	03/11/2009	6 hours

Entry Type: Routine Oversight

Include in CIR: No

Title:

RadCon walkdown of Tank Farm facilities

Summary:

On March 11, 2009, I conducted a field walk down of radiological conditions at various Tank Farms and noted the following:

Finding: Radiological survey maps are not maintained as required at C Farm Change trailer.

Requirements:

TFRCM Article 551.10: "Results of current surveys or survey maps should be conspicuously posted to inform personnel of the radiological conditions."

TFC-ESHQ-RP_MON-P-10, "Required Radiological Surveillances," Rev. D-8, Section 4.3 step 2:
"Ensure status maps are maintained current and contain sufficient information to allow non-facility emergency responders to evaluate the radiological hazards in the facility."

TFC-ESHQ-RP_MON-P-10, "Required Radiological Surveillances," Rev. D-8, Section 4.3 step 6:
"Update the survey map with the following information, as applicable: (7.1.1.d)
- General area dose rates.
- High and very high radiation areas.
- Hot spot dose rates.
- Contamination levels.
- High contamination areas.
- Airborne radioactivity areas.
- Date of last survey and surveyor's name(s) is be included.
- A legend to interpret symbols or data presented."

Discussion:

The following issues were noted with the radiological status map at the C Farm Change trailer:
- The radiological status map at the C Farm Change trailer was found to have no notation of any High Radiation Areas, although a dose rate of 100 mrem/hr was noted on the map.
- No contamination levels were provided on the survey map, although the entire C Farm area is posted at least as a Contamination Area, with some smaller areas posted as a High Contamination Area.
- The legend on the map is covered by tape containing the name and date of the last survey. It appears from the legend that any markings made in blue (there were none present on the map) indicate contamination levels; markings made in red are dose rates at a distance of 30 cm.
- It is unclear from the map whether dose rates are at 30 cm or contact. There are two "red" numbers present in pairs on the maps, with no indication from the legend or other source if one is meant to be a contact dose rate.
- No area boundaries or indications of the extent of radiological postings are present on the map. There is an indication that one area of C Farm is posted "ARA" but no boundary of the ARA is provided on the status map. Only the letters "ARA" are written on the map.
- No hot spots were identified on the map.

Finding: Airflow is not controlled from areas of lesser to greater removable contamination in the C Farm Egress Tent.

Requirement:

TFRCM Article 337.3: "Control and direct airflow from areas of lesser to greater removable contamination."

Discussion:

On March 11, 2009, a propane heater with two exhaust trunks was found in the C Farm Egress Tent, with one exhaust hose in the Radiological Buffer Area (RBA) for Contamination Control, and the other exhaust hose in the Contamination Area/RBA Boundary. Both exhaust hoses could have been located in the radiologically clean area of the egress tent.

Finding: Radiological Buffer Area signs at 241-B and 241-BY are not correctly posted.

Discussion:

Two Radiological Buffer Areas for contamination control were not completely posted with RBA signs indicating "exit survey required." The west vehicle gate at 241-B Farm is a RBA for contamination control. Only 1 of 3 RBA signs indicated "exit survey required." The RBA for contamination control on the east side of 241-BY contains 3 of 4 RBA signs indicating "exit survey required."

Two other observed issues:

1. The WIDS Site 200-W-54 located on the East side of S Farm Complex is a large posted Contamination Area. Approximately 50 feet of the rope and Contamination Area signs on the south side of the WIDS site was not in place. I immediately notified the Base Operations Radiological Control Manager for corrective action.

2. At MO-296 north of the S Farm Complex, a large amount of tumbleweeds had blown into a posted Contamination Area. I immediately notified the Base Operations Radiological Control Manager for corrective action.

All of these issues were communicated to WRPS Radiological Control management for review and action.

Save

Problem Evaluation Request (PER)

WRPS-PER-2009-0422
Closed 07/06/2009 12:30

PER No	Date of Discovery	Time of Discovery (24:00)	Project
WRPS-PER-2009-0422	03/17/2009	13:55	Base Ops

Location

S Farm

How Was Problem Discovered

DOE-ORP

Description of Concern or Problem

It was reported in DOE-ORP Operational Awareness Report #5922 dated 3/12/2009 that on 3/11/2009, that "At MO-296 north of the S Farm Complex, a large amount of tumble weeds had blown into a posted Contamination Area."

Requirement Not Satisfied	Source Document Number

Equipment Identification Number	System Identification

Immediate actions Taken or Planned

Base Ops RadCon Manager notified.
Base Ops RadCon personnel submitted PER

Recommended Corrective actions

Assign PER to MO-296 facility manger as TUF to ensure removal of tumble weeds from CA.

Originator Contact

Please call me if you have specific questions.

Originators Name	Originators ID	Originators Phone	Date Initiated
Bickel, Eric E	H3764153	(509) 372-1470	03/17/2009

SHIFT OPERATIONS REVIEW

Title

DOE-ORP Operational Awareness Report #5922

How Discovered	Agency
FACREP Surveillance	

Reportability	SSC Operability	Operability Review	Comp Measures Req
Non-Reportable	N/A	N/A	

Describe actions Taken or Recommended

Forward PER to Facilities Management. No additional Base Ops Shift Office actions required at this time.

SO Reviewer Name	SO Reviewer ID	SO Reviewer Phone	SO Review Date
Johnson, Brian A	H0003531	(509) 373-2696	03/17/2009

SCREENING

PER Significance Level	
TUF	

Independent Assessment Review	Occurrence Report Number	Externally Identified	
No		Yes	

Assigned Responsible Manager	Facilities Rep / SSO	Safety Management Rep	
Brooks, Rocky L			

Program	Safety Management Program
• N/A	• Radiological Control

PER Screening Comments			
See attached e-mail (Nancy Brown 03/18/09) RE-SCREEN PRIOR TO LAUNCH: Jim Ficklin: WRPS-PER-2009-0422 belongs to Rocky Brooks. MO-296 is the SY Change Trailer. RE-SCREENING COMMENTS: Reassign from Dave Brown to Rocky Brooks. (Nancy Brown 03/19/09)			
Causal Code			
MGT/Comm/Train	**Human Performance**	**GEMS**	**Equip/Eng/Other**
Failed Barrier	**ORPS Code**	**Functional Area**	**Work Process**
	Not Applicable	Radiation Protection	• Radiological Contamination Control
ISMS	**Consequence Code**		
Perform work within the controls	• Contam - Legacy - Discovery of contamination from past practices or spills in soil, animal, or vegetation		
PER Screening Chair	**PER Screening Chair ID**	**PER Screening Chair Phone**	**PER Screening Date**
Brown, Nancy L	H0088797	(509) 373-0992	03/18/2009
PAAA REVIEW			
PAAA Screening	**PAAA Codes**	**Function Codes**	
Not subject to PAAA			
NTS Report Number	**NTS Report Date**		
Repetitive / Recurrent	**Programmatic**	**Intentional Violation / Misrepresentation**	
No	No	No	
PAAA Screening Comments			
PAAA Reviewer Name	**PAAA Review Date**		
Anderson, Craig E	03/18/2009		
PAAA Approver Name	**PAAA Approve Date**		
Anderson, Craig E	03/19/2009		
SENIOR MANAGEMENT REVIEW/CONCURRENCE			
TF Operations Morning Leadership Call			
TF Operations Morning Leadership Call is no longer required.			
Instructions for Responsible Manager			
Review the PER and determine action required. Complete action and enter statement on TUF tab. 'Complete' the task in E-STARS and 'Close' in accordance with TFC-ESHQ-Q_C-C-01, Problem Evaluation Request.			
Senior Management	**Sr Mgmt ID**	**Sr Mgmt Phone**	**Sr Mgmt Review Date**
Owen, Annette	H0054042	(509) 372-0533	03/23/2009
Track Until Fixed (TUF)			
Action Taken			
The tumbleweeds have been removed as verified by a walkdown on 07/06/09. No further actions are necessary.			
ATTACHMENTS			
FW_ Emailing_ PER_htm.msg			

Link to PER
OP Awareness #5922.pdf

AUDIT HISTORY

Change Date	Auditor	Comments
03/18/2009 16:10	Brown, Nancy L	'PER Screening Comments' was changed.
03/19/2009 10:54	Brown, Nancy L	'Assigned Responsible Manager' was changed. 'PER Screening Comments' was changed.
03/19/2009 13:03	Brown, Nancy L	'PER Screening Comments' was changed.
03/23/2009 08:04	Owen, Annette	Responsible Manager Task Launched by Owen, Annette

-- End of Report --
07/06/2009 12:45 PM

Task# WRPS-PER-2009-0422			
E-STARS[R] Report Task Detail Report 07/06/2009 1245			
TASK INFORMATION			
Task#	WRPS-PER-2009-0422		
Subject	TUF; DOE-ORP Operational Awareness Report #5922		
Parent Task#		Status	CLOSED 07/06/2009
Reference		Due	07/19/2009
Originator	^PER Coordinator	Priority	Medium
Originator Phone		Category	PER
Origination Date	03/17/2009 1354	Generic1	None
Remote Task#		Generic2	None
Deliverable	PER Review	Generic3	None
Class	None	View Permissions	Global
Instructions	*No Instructions*		
ROUTING LISTS			
1	Responsible Manager		Inactive
	Review the PER and determine action required. Complete action and enter statement on TUF tab. 'Complete' the task in E-STARS and 'Close' in accordance with TFC-ESHQ-Q_C-C-01, Problem Evaluation Request.		
	• Brooks, Rocky L - Assign - Completed - 07/06/2009 1224 *Instructions:*		
	• Brooks, Rocky L - Assign - Completed - 07/06/2009 1225 *Instructions:* Did you contact the originator about the PER? Document your contact in the response window.		
	• Brooks, Rocky L - Close - Closed - 07/06/2009 1225 *Instructions:* Verify the TUF Tab and close the task when complete		
2	Review Initial PER		Inactive
	Review New PER		
	• ^SO(Johnson, Brian A) - Review - Concur - 03/17/2009 2140 *Instructions:*		
	• ^PER Screening(Brown, Nancy L) - Review - Concur - 03/18/2009 1329 *Instructions:*		
	• ^Mgr Review - Review - Withdrawn - 03/18/2009 1554		

Task# WRPS-PER-2009-0422			
	Instructions:		
	• ^PER Screening(Brown, Nancy L) - Review - Concur - 03/19/2009 1304 *Instructions:*		
	• ^Mgr Review(Owen, Annette) - Review - Concur - 03/23/2009 0804 *Instructions:*		
ATTACHMENTS			
Attachments	1. FW_ Emailing_ PER_htm.msg 2. Link to PER 3. OP Awareness #5922.pdf		
COMMENTS			
Poster	Brooks, Rocky L (Judkins, Heather K) - 07/06/2009 1224		
	Feedback		
	The originator did not want to be contacted when this PER was closed.		
TASK DUE DATE HISTORY			
Modified	03/23/2009 0804 - ^PER Coordinator	New Due Date	07/19/2009 1630
Modified	03/23/2009 0804 - ^PER Coordinator	New Due Date	07/15/2009 1630
Modified	03/17/2009 1354 - ^PER Coordinator	New Due Date	03/19/2009 1630
SUB TASK HISTORY			
No Subtasks			
-- end of report --			

Department of Energy
Operational Awareness

OpAware: Project/Issue Detail

Tank Farms

Richard Jansons		Cross	
Rpt #:	Date Entered:	Date Observed:	Hours in Field:
5922	03/12/2009	03/11/2009	6 hours

Entry Type: Routine Oversight

Include in CIR: No

Title:

RadCon walkdown of Tank Farm facilities

Summary:

On March 11, 2009, I conducted a field walk down of radiological conditions at various Tank Farms and noted the following:

Finding: Radiological survey maps are not maintained as required at C Farm Change trailer.

Requirements:

TFRCM Article 551.10: "Results of current surveys or survey maps should be conspicuously posted to inform personnel of the radiological conditions."

TFC-ESHQ-RP_MON-P-10, "Required Radiological Surveillances," Rev. D-8, Section 4.3 step 2:
"Ensure status maps are maintained current and contain sufficient information to allow non-facility emergency responders to evaluate the radiological hazards in the facility."

TFC-ESHQ-RP_MON-P-10, "Required Radiological Surveillances," Rev. D-8, Section 4.3 step 6:
"Update the survey map with the following information, as applicable: (7.1.1.d)
- General area dose rates.
- High and very high radiation areas.
- Hot spot dose rates.
- Contamination levels.
- High contamination areas.
- Airborne radioactivity areas.
- Date of last survey and surveyor's name(s) is be included.
- A legend to interpret symbols or data presented."

Discussion:

The following issues were noted with the radiological status map at the C Farm Change trailer:
- The radiological status map at the C Farm Change trailer was found to have no notation of any High Radiation Areas, although a dose rate of 100 mrem/hr was noted on the map.
- No contamination levels were provided on the survey map, although the entire C Farm area is posted at least as a Contamination Area, with some smaller areas posted as a High Contamination Area.
- The legend on the map is covered by tape containing the name and date of the last survey. It appears from the legend that any markings made in blue (there were none present on the map) indicate contamination levels; markings made in red are dose rates at a distance of 30 cm.
- It is unclear from the map whether dose rates are at 30 cm or contact. There are two "red" numbers present in pairs on the maps, with no indication from the legend or other source if one is meant to be a contact dose rate.
- No area boundaries or indications of the extent of radiological postings are present on the map. There is an indication that one area of C Farm is posted "ARA" but no boundary of the ARA is provided on the status map. Only the letters "ARA" are written on the map.
- No hot spots were identified on the map.

Finding: Airflow is not controlled from areas of lesser to greater removable contamination in the C Farm Egress Tent.

Requirement:

TFRCM Article 337.3: "Control and direct airflow from areas of lesser to greater removable contamination."

Discussion:

On March 11 2009, a propane heater with two exhaust trunks was found in the C Farm Egress Tent, with one exhaust hose in the Radiological Buffer Area (RBA) for Contamination Control, and the other exhaust hose in the Contamination Area/RBA Boundary. Both exhaust hoses could have been located in the radiologically clean area of the egress tent.

Finding: Radiological Buffer Area signs at 241-B and 241-BY are not correctly posted.

Discussion:

Two Radiological Buffer Areas for contamination control were not completely posted with RBA signs indicating "exit survey required." The west vehicle gate at 241-B Farm is a RBA for contamination control. Only 1 of 3 RBA signs indicated "exit survey required." The RBA for contamination control on the east side of 241-BY contains 3 of 4 RBA signs indicating "exit survey required."

Two other observed issues:

1. The WIDS Site 200-W-54 located on the East side of S Farm Complex is a large posted Contamination Area. Approximately 50 feet of the rope and Contamination Area signs on the south side of the WIDS site was not in place. I immediately notified the Base Operations Radiological Control Manager for corrective action.

2. At MO-296 north of the S Farm Complex, a large amount of tumbleweeds had blown into a posted Contamination Area. I immediately notified the Base Operations Radiological Control Manager for corrective action.

All of these issues were communicated to WRPS Radiological Control management for review and action.

Message

From: Owen, Annette
Sent: Wednesday, March 18, 2009 7:34 AM
To: Brown, Nancy L
Subject: FW: Emailing: PER.htm
Attachments: Weed Control Schedule Input.htm; 2009 Campaigns with Electrical OutageR1.pdf

---

From: Brown, David W
Sent: Tuesday, March 17, 2009 3:30 PM
To: Bickel, Eric E
Cc: Owen, Annette; Ficklin, James W (Jim); Johnson, Austin Ray; Brooks, Rocky L
Subject: Emailing: PER.htm

Eric,

We (WRPS) have a detailed annual schedule to remove tumbleweeds from all tank farms and exterior CAs associated with tank farms (schedule attached for interior schedule and FH maintains the exterior schedule). The activity to remove tumbleweeds from each farm interior, and any associated exterior CAs, is a priority 1 work activity which means it must complete to for the campaign to end for those farms. With the current wind conditions of spring it is impossible to keep the blowing weeds out of all CAs at all times. We only have one regulated tumbleweed truck. We have cleaned all farms recently to have them all re-fill with weeds from last weekends winds. In the spring this is a continuing effort. Having a methodical dedicated schedule to remove these weeds is already in place. No further action can be done beyond this approach.

Dave Brown

Problem Evaluation Request (PER)

WRPS-PER-200
In Pro

PER No	Date of Discovery	Time of Discovery (24:00)	Project
WRPS-PER-2009-0422	03/17/2009	13:55	Base Ops

Location

S Farm

How Was Problem Discovered

DOE-ORP

Description of Concern or Problem

It was reported in DOE-ORP Operational Awareness Report #5922 dated 3/12/2009 that on 3/11/2009, that "At M(north of the S Farm Complex, a large amount of tumble weeds had blown into a posted Contamination Area."

Requirement Not Satisfied	Source Document Number

Equipment Identification Number	System Identification

Immediate actions Taken or Planned

Base Ops RadCon Manager notified.
Base Ops RadCon personnel submitted PER

Recommended Corrective actions			
Assign PER to MO-296 facility manger as TUF to ensure removal of tumble weeds from CA.			
Originator Contact			
Please call me if you have specific questions.			
Originators Name	**Originators ID**	**Originators Phone**	**Date Initiated**
Bickel, Eric E	H3764153	(509) 372-1470	03/17/2009
SHIFT OPERATIONS REVIEW			
Title			
How Discovered		**Agency**	
Reportability	**SSC Operability**	**Operability Review**	**Comp Measures Req**
Describe actions Taken or Recommended			
SO Reviewer Name	**SO Reviewer ID**	**SO Reviewer Phone**	**SO Review Date**
		() -	
SCREENING			
PER Significance Level			
Independent Assessment Review	**Occurrence Report Number**	**Externally Identified**	
No		No	
Assigned Responsible Manager	**Facilities Rep / SSO**	**Safety Management Rep**	
Program		**Safety Management Program**	
PER Screening Comments			
Causal Code			
MGT/Comm/Train	**Human Performance**	**GEMS**	**Equip/Eng/Other**
Failed Barrier	**ORPS Code**	**Functional Area**	**Work Process**
ISMS	**Consequence Code**		
PER Screening Chair	**PER Screening Chair ID**	**PER Screening Chair Phone**	**PER Screening Date**
		() -	
PAAA REVIEW			
PAAA Screening	**PAAA Codes**	**Function Codes**	
NTS Report Number	**NTS Report Date**		

Repetitive / Recurrent	**Programmatic**	**Intentional Violation / Misrepresentation**	
No	No	No	
PAAA Screening Comments			
PAAA Reviewer Name	**PAAA Review Date**		
PAAA Approver Name	**PAAA Approve Date**		
SENIOR MANAGEMENT REVIEW/CONCURRENCE			
TF Operations Morning Leadership Call			
Instructions for Responsible Manager			
Senior Management	**Sr Mgmt ID**	**Sr Mgmt Phone**	**Sr Mgmt Review Date**
ATTACHMENTS			
Link to PER			
OP Awareness #5922.pdf			

-- End of Report --
03/17/2009 03:24 PM

Save

Problem Evaluation Request (PER)

WRPS-PER-2009-0423
Closed 03/19/2009 08:15

PER No	Date of Discovery	Time of Discovery (24:00)	Project
WRPS-PER-2009-0423	03/17/2009	14:10	Base Ops

Location

C Farm

How Was Problem Discovered

DOE-ORP

Description of Concern or Problem

It was reported in DOE-ORP Operational Awareness Report #5914 dated 3/12/2009 that on 3/5/2009:

Finding: There is a broom located in the posted Contamination Area at the C-Tank Farm change trailer...."

Requirement Not Satisfied	Source Document Number

Equipment Identification Number	System Identification

Immediate actions Taken or Planned

WRPS management was notified and the Base Ops RadCon manager requested that a PER be initiated.

Recommended Corrective actions

The use of a broom in a contaminated area could cause airborne radioactivity. However, the use of brooms in change trailers has not been problematic historically due to the overall contamination control practices/monitoring. There is no procedural restriction on the use of brooms in CAs. Therefore, there is no violation and this PER should be assigned to Base Ops as Trend Only. The WRPS CTA for contamination control concurs with this evaluation.

Originator Contact

Please contact me if you have specific questions.

Originators Name	Originators ID	Originators Phone	Date Initiated
Bickel, Eric E	H3764153	(509) 372-1470	03/17/2009

SHIFT OPERATIONS REVIEW

Title

DOE-ORP Operational Awareness Report #5914

How Discovered	Agency
FACREP Surveillance	

Reportability	SSC Operability	Operability Review	Comp Measures Req
Non-Reportable	N/A	N/A	

Describe actions Taken or Recommended

Forward PER to Facilities Management. No additional Base Ops Shift Office actions required at this time.

SO Reviewer Name	SO Reviewer ID	SO Reviewer Phone	SO Review Date
Johnson, Brian A	H0003531	(509) 373-2696	03/17/2009

SCREENING

PER Significance Level	
Trend Only	

Independent Assessment Review	Occurrence Report Number	Externally Identified	
No		Yes	

Assigned Responsible Manager	Facilities Rep / SSO	Safety Management Rep	
Brannan, Patrick (Brad)			

Program	Safety Management Program

• N/A		• Radiological Control	
PER Screening Comments			
There is no procedural restriction on the use of brooms in CAs. (Nancy Brown 03/18/09)			
Causal Code			
MGT/Comm/Train	**Human Performance**	**GEMS**	**Equip/Eng/Other**
Failed Barrier	**ORPS Code**	**Functional Area**	**Work Process**
	Not Applicable	Radiation Protection	• Radiological Contamination Control
ISMS	**Consequence Code**		
Provide feedback and continuous improvement	• Contam - Conduct of Ops - Conduct of radiological operations issues identified that resulted in or could potentially result in failure to adequately control contamination		
PER Screening Chair	**PER Screening Chair ID**	**PER Screening Chair Phone**	**PER Screening Date**
Brown, Nancy L	H0088797	(509) 373-0992	03/18/2009
PAAA REVIEW			
PAAA Screening	**PAAA Codes**	**Function Codes**	
PAAA, Non-NTS Reportable	• 10 CFR 830.122 (e)(1)	• Maintenance	
NTS Report Number	**NTS Report Date**		
Repetitive / Recurrent	**Programmatic**	**Intentional Violation / Misrepresentation**	
No	No	No	
PAAA Screening Comments			
PAAA Reviewer Name	**PAAA Review Date**		
Anderson, Craig E	03/18/2009		
PAAA Approver Name	**PAAA Approve Date**		
Anderson, Craig E	03/19/2009		
SENIOR MANAGEMENT REVIEW/CONCURRENCE			
TF Operations Morning Leadership Call			
TF Operations Morning Leadership Call is no longer required.			
Instructions for Responsible Manager			
Senior Management	**Sr Mgmt ID**	**Sr Mgmt Phone**	**Sr Mgmt Review Date**
Owen, Annette	H0054042	(509) 372-0533	03/19/2009
ATTACHMENTS			
Link to PER			
Op Awareness #5914.pdf			
AUDIT HISTORY			
Change Date	**Auditor**	**Comments**	
03/18/2009 11:54	Brown, Nancy L	'Description of Concern or Problem' was changed. Added "Finding" with the concurrence of the PER Originator	

-- End of Report --
03/19/2009 08:15 AM

Task# WRPS-PER-2009-0423			
E-STARS[R] Report Task Detail Report 03/19/2009 0815			
TASK INFORMATION			
Task#	WRPS-PER-2009-0423		
Subject	Trend; DOE-ORP Operational Awareness Report #5914		
Parent Task#		Status	CLOSED 03/19/2009
Reference		Due	03/19/2009
Originator	^PER Coordinator	Priority	Medium
Originator Phone		Category	PER
Origination Date	03/17/2009 1419	Generic1	None
Remote Task#		Generic2	None
Deliverable	PER Review	Generic3	None
Class	None	View Permissions	Global
Instructions	*No Instructions*		
ROUTING LISTS			
1	Review Initial PER		Inactive
	Review New PER		
	• ^SO(Johnson, Brian A) - Review - Concur - 03/17/2009 2135 *Instructions:*		
	• ^PER Screening(Brown, Nancy L) - Review - Concur - 03/18/2009 1331 *Instructions:*		
	• ^Mgr Review(Owen, Annette) - Review - Concur - 03/19/2009 0808 *Instructions:*		
ATTACHMENTS			
Attachments	1. Link to PER 2. Op Awareness #5914.pdf		
COMMENTS			
No Comments			
TASK DUE DATE HISTORY			
Modified	03/17/2009 1420 - ^PER Coordinator	New Due Date	03/19/2009 1630
SUB TASK HISTORY			

Task# WRPS-PER-2009-0423
No Subtasks
-- end of report --

Department of Energy
Operational Awareness

OpAware: Project/Issue Detail

Tank Farms

Richard Jansons		Cross	
Rpt #:	Date Entered:	Date Observed:	Hours in Field:
5914	03/12/2009	03/05/2009	3 hours

Entry Type: Routine Oversight

Include in CIR: No

Title:

Field Walk down of C Farm facilities

Summary:

On March 5, 2009, I conducted a field surveillance at the C Farm. The following Finding was noted.

Finding 1: Contamination controls were not maintained to prevent the inadvertent transfer of removable contamination to locations outside of radiological areas.

Requirement:

10 CFR 835.1102(a): "Appropriate controls shall be maintained and verified which prevent the inadvertent transfer of removable contamination to locations outside of radiological areas under normal operating conditions."

Discussion:

On March 5, 2009, contamination control deficiencies were noted in the C Farm Change Trailer and in C Farm.

1. An NCO reached across CA/RBA line outside the trailer, brought a potentially contaminated item into the RBA section of the trailer for surveying. The NCO then incorrectly performed a hand-and-foot survey. The survey speed was well in excess of 2"/second, did not survey the entire bottom of the shoes or palms of the hands, and was completed (both alpha and beta-gamma surveys combined) in approximately 10 seconds.

2. Three personnel were observed wearing anti-contamination clothing inside the farm, a posted Contamination Area. Two of the three personnel were observed to have the hoods of a sweatshirt protruding over the collar of the anti-contamination coveralls and onto the back of the anti-Cs. This is a repeat issue communicated to WRPS management on November 19, 2008.

3. There is a broom located in the posted Contamination Area at the C-Farm change trailer. Sweeping inside of a Contamination Area is an extremely poor radiological control practice, and can cause unexpected levels of airborne radioactivity as well as inadvertently spreading contamination beyond CA boundaries.

These issues were communicated to WRPS management for action.

Save

Problem Evaluation Request (PER)

WRPS-PER-2009-0424
In Process/Work

PER No	Date of Discovery	Time of Discovery (24:00)	Project
WRPS-PER-2009-0424	03/17/2009	14:20	C Farm-RC

Location

C Farm

How Was Problem Discovered

DOE-ORP

Description of Concern or Problem

It was reported in DOE-ORP Operational Awareness Report #5914 dated 3/12/2009 that on 3/5/2009, that: Contamination controls were not maintained to prevent the inadvertent transfer of removable contamination to location outside of radiological areas." Specific items identified include:
1) An NCO was observed reaching across a CA/RBA line and bringing potentially contaminated item into the RBA;
2) The same NCO was then observed incorrectly performing a hand/foot frisk; and,
3) Three personnel were observed incorrectly wearing PCs (i.e., sweatshirt hoods outside of the coveralls coller).

The incorrect wearing of PCs was also reported to WRPS management on November 19 2008.

Requirement Not Satisfied	Source Document Number

Equipment Identification Number	System Identification

Immediate actions Taken or Planned

WRPS management notified and Base Ops RadCon personnel requested to submit PER.

C-Tank Farm personnel and Base Ops West personnel briefed by WRPS management immediately following notification of the events reported in Ops Awareness Report #5914.

Recommended Corrective actions

It is recommended that this PER be assigned to C-Farm Closure/Retrieval management as a PIE/CIM to determine how better to communicate and implement routine contamination control practices.

Originator Contact

Please call me if you have specific questions.

Originators Name	Originators ID	Originators Phone	Date Initiated
Bickel, Eric E	H3764153	(509) 372-1470	03/17/2009

SHIFT OPERATIONS REVIEW

Title

DOE-ORP Operational Awareness Report #5914

How Discovered	Agency
FACREP Surveillance	

Reportability	SSC Operability	Operability Review	Comp Measures Req
Non-Reportable	N/A	N/A	

Describe actions Taken or Recommended

Forward PER to Facilities Management. No additional Base Ops Shift Office actions required at this time.

SO Reviewer Name	SO Reviewer ID	SO Reviewer Phone	SO Review Date
Johnson, Brian A	H0003531	(509) 373-2696	03/17/2009

SCREENING

PER Significance Level	
PER with Resolution	

Independent	Occurrence Report Number	Externally Identified	

Assessment Review			
No		Yes	
Assigned Responsible Manager	**Facilities Rep / SSO**	**Safety Management Rep**	
Smith, Donald (Kent)			
Program		**Safety Management Program**	
• N/A		• Radiological Control	
PER Screening Comments			
PER w/ Res with informal Apparent Cause Analysis cc: Ed Adams (Nancy Brown 03/18/09)			
Causal Code			
A3B2C04	Human Performance LTA Rule Based Error Previous success in use of rule reinforced continued use of rule		
A4B1C04	Management Problem Management Methods LTA Management follow-up or monitoring of activities did not identify problems		
MGT/Comm/Train	**Human Performance**	**GEMS**	**Equip/Eng/Other**
Failed Barrier	**ORPS Code**	**Functional Area**	**Work Process**
	Not Applicable	Radiation Protection	• Radiological Contamination Control
ISMS	**Consequence Code**		
Perform work within the controls	• Contam - Conduct of Ops - Conduct of radiological operations issues identified that resulted in or could potentially result in failure to adequately control contamination		
PER Screening Chair	**PER Screening Chair ID**	**PER Screening Chair Phone**	**PER Screening Date**
Brown, Nancy L	H0088797	(509) 373-0992	03/18/2009
PAAA REVIEW			
PAAA Screening	**PAAA Codes**	**Function Codes**	
PAAA, Non-NTS Reportable	• 10 CFR 835.1102 (a)	• RadCon Inadequate Contamination Control	
NTS Report Number	**NTS Report Date**		
Repetitive / Recurrent	**Programmatic**	**Intentional Violation / Misrepresentation**	
No	No	No	
PAAA Screening Comments			
PAAA Reviewer Name	**PAAA Review Date**		
Anderson, Craig E	03/18/2009		
PAAA Approver Name	**PAAA Approve Date**		
Anderson, Craig E	03/19/2009		
SENIOR MANAGEMENT REVIEW/CONCURRENCE			
TF Operations Morning Leadership Call			
TF Operations Morning Leadership Call is no longer required.			

Instructions for Responsible Manager

Review the PER Screening Tab and Senior Manager Review for requested data. Complete the task in E-STARS in accordance with TFC-ESHQ-Q_C-C-01, and TFC-ESHQ-Q_ADM-C-12 Apparent Cause Analysis & Corrective Action Planning.

Senior Management	Sr Mgmt ID	Sr Mgmt Phone	Sr Mgmt Review Date
Owen, Annette	H0054042	(509) 372-0533	03/19/2009

CAUSE ANALYSIS

Description of Occurrence

It was reported in DOE-ORP Operational Awareness Report #5914 dated 3/12/2009 that on 3/5/2009, that: Contamination controls were not maintained to prevent the inadvertent transfer of removable contamination to location outside of radiological areas." Specific items identified include:
1) An NCO was observed reaching across a CA/RBA line and bringing potentially contaminated item into the RBA;
2) The same NCO was then observed incorrectly performing a hand/foot frisk; and,
3) Three personnel were observed incorrectly wearing PCs (i.e., sweatshirt hoods outside of the coveralls coller).

Extent of Condition

A simple search of the PER database utilizing "Radiological Conduct of Operations" indicates this is a recurring problem that has been noted in several assessments over the past 5 years. As these occurrences have been tank farm wide, the checklist developed under remedial action #2 was provided to other ALARA committees for consideration.

Safety Significance

Although this specific observation may not have been safety significant in itself, the poor radiological practices observed could lead to contamination spreads, personnel contaminations, or personnel uptakes. These would all be safety significant in the wrong circumstance.

Generic Implications

Remedial Corrective Action

A tailgate presentation was conducted to remind personnel of the need for good Conduct of Radiological Operations. Actionee: KW Gray Date completed: 2/2/2009

An ALARA goal was written to have the SST Retrieval and Closure ALARA committee perform quarterly observations of field activities utilizing a checklist. Actionee: KW Gray Date Completed: 11/18/2008

Causal Analysis, Apparent Cause and/or Root Cause Analysis

Reviews of documentation and interviews with management indicate the cause for these issues is a lack of management oversight in enforcing the proper radiological conduct of operations. Numerous tailgate slides over the year and management expections have not eliminated the frequency of occurrence of these issues. The apparent cause is believed to be a lack of management follow up in ensuring expectations are being met. The checklist utilized in remedial action #2 is being used by SSWs in performance of MOPs during the first month of the next few quarters to identify specific areas of weakness in Radiological Conduct of Operations. The SST RC EAPC/ALARA committee will then review the results of those MOPs to determine actions that may need to be taken to correct the deficiencies.

CORRECTIVE ACTIONS

Actionee	Action Due Date	E-STARS Number
Gray, Keith W	08/07/2009	WRPS-PER-2009-0424.1

Action

Evaluate 2 quarters worth of conduct of operations MOPs at the EAPC/ALARA committee and identify weaknesses that may need futher action. Closure documentation would consist of meeting minutes from the EAPC/ALARA meetings in May and July.

Corrective Action Attachments

- Link to PER
- Op Awareness #5914.pdf
- SST CONDUCT OF RADIOLOGICAL OPERATIONS ISSUES.Tailgate Addition.6-1-09.pptx
- SST RETRIEVAL AND CLOSURE Conduct of Rad Ops Checklist.docx
- Tailgate 02-02-09_1.pdf
- WRPS-08-00143.CY2009 ALARA Goals and Tech Basis.pdf
- WRPS-PER-2009-0424-Change Analysis.docx

ATTACHMENTS

Link to PER

Op Awareness #5914.pdf

SST RETRIEVAL AND CLOSURE Conduct of Rad Ops Checklist.docx

Tailgate 02-02-09_1.pdf

WRPS-08-00143.CY2009 ALARA Goals and Tech Basis.pdf		
WRPS-PER-2009-0424-Change Analysis.docx		
AUDIT HISTORY		
Change Date	**Auditor**	**Comments**
03/19/2009 08:08	Owen, Annette	Responsible Manager Task Launched by Owen, Annette
05/06/2009 14:00	Glaman, Linda R	Corrective actions Launched by Glaman, Linda R

-- End of Report --
07/09/2009 10:48 AM

Task# WRPS-PER-2009-0424

E-STARS[R] Report
Task Detail Report
07/09/2009 1048

TASK INFORMATION			
Task#	WRPS-PER-2009-0424		
Subject	RES; DOE-ORP Operational Awareness Report #5914		
Parent Task#		**Status**	Open
Reference		**Due**	08/17/2009
Originator	^PER Coordinator	**Priority**	Medium
Originator Phone		**Category**	PER
Origination Date	03/17/2009 1432	**Generic1**	None
Remote Task#		**Generic2**	None
Deliverable	PER Review	**Generic3**	None
Class	None	**View Permissions**	Global
Instructions	*No Instructions*		

ROUTING LISTS

1	Corrective actions Routing Lis	Active
	To launch Corrective actions.	
	• ^PER CAs - Assign - Awaiting Response - Due Date - 08/17/2009 0000 *Instructions:*	
2	Responsible Manager	Inactive
	Perform a technical content review of the resolution.	
	• Smith, Donald (Kent) - Assign - Completed with comments - 04/10/2009 0846 *Instructions:*	
	• Smith, Donald (Kent) - Assign - Completed - 04/10/2009 0846 *Instructions:* Did you contact the originator about the PER? Document your contact in the response window.	
	• Smith, Donald (Kent) - Assign - Completed with comments - 04/20/2009 1245 *Instructions:* Discussed with Keith Gray and Donald (Kent) Smith. Recommend corrective actions be assigned to complete the discussed checklist reviews by the ALARA Committee be assigned for at least two quarters. Bob Brown ↳ *Routing List:* gray - Inactive *Instructions:* • Gray, Keith W - Assign - Completed with comments - 04/20/2009 0918	
	• ^Independent Assessment Review(Brown, Robert L) - Review - Concur with comments - 04/20/2009 1414 *Instructions:*	
3	Review Initial PER	Inactive
	Review New PER	
	• ^SO(Johnson, Brian A) - Review - Concur - 03/17/2009 2135 *Instructions:*	
	• ^PER Screening(Brown, Nancy L) - Review - Concur - 03/18/2009 1333 *Instructions:*	

Task# WRPS-PER-2009-0424

	• ^Mgr Review(Owen, Annette) - Review - Concur - 03/19/2009 0808 *Instructions:*

ATTACHMENTS

Attachments	1. Link to PER 2. Op Awareness #5914.pdf 3. SST RETRIEVAL AND CLOSURE Conduct of Rad Ops Checklist.docx 4. Tailgate 02-02-09_1.pdf 5. WRPS-08-00143.CY2009 ALARA Goals and Tech Basis.pdf 6. WRPS-PER-2009-0424-Change Analysis.docx

COMMENTS

Poster	Smith, Donald (Kent) (Rensink, Gail L) - 04/10/2009 0846
	Completed
	Change analsyis performed. Corrective actions complete. Documentation attached. All actions complete.
Poster	Gray, Keith W - 04/20/2009 0918
	Completed
	Reviews of documentation and interviews with management indicate the cause for these issues is a lack of management oversight in enforcing the proper radiological conduct of operations. Numerous tailgate slides over the year and management expections have not eliminated the frequency of occurrence of these issues. The apparent cause is believed to be a lack of management follow up in ensuring expectations are being met. The checklist utilized in remedial action #2 is being used by SSWs in performance of MOPs during the first month of the next few quarters to identify specific areas of weakness in Radiological Conduct of Operations. The SST RC EAPC/ALARA committee will then review the results of those MOPs to determine actions that may need to be taken to correct the deficiencies.
Poster	Smith, Donald (Kent) (Rensink, Gail L) - 04/20/2009 1245
	Completed
	All actions are complete and no further action is required.
Poster	^Independent Assessment Review (Brown, Robert L) - 04/20/2009 1414
	Concur
	Concur Bob Brown

TASK DUE DATE HISTORY

Modified	05/06/2009 1400 - ^PER Coordinator	**New Due Date**	08/17/2009 0000
Modified	03/19/2009 0808 - ^PER Coordinator	**New Due Date**	05/01/2009 1630
Modified	03/19/2009 0808 - ^PER Coordinator	**New Due Date**	05/01/2009 1630
Modified	03/17/2009 1432 - ^PER Coordinator	**New Due Date**	03/19/2009 1630

SUB TASK HISTORY

Subtask#	WRPS-PER-2009-0424.1				
Subject	WRPS-PER-2009-0424; RES; Evaluate 2 quarters worth of conduct of operations MOPs at the EAPC/ALARA committee and identify weaknesses that may need fut				
Originator	^PER CAs				
	Routing List	Corrective Action			
		Assignee	Gray, Keith W	**Response**	

Task# WRPS-PER-2009-0424					
		Assignee	Smith, Donald (Kent)	**Response**	

-- end of report --

Department of Energy
Operational Awareness

OpAware: Project/Issue Detail

Tank Farms

Richard Jansons		**Cross**	
Rpt #:	Date Entered:	Date Observed:	Hours in Field:
5914	03/12/2009	03/05/2009	3 hours

Entry Type: Routine Oversight

Include in CIR: No

Title:

Field Walk down of C Farm facilities

Summary:

On March 5, 2009, I conducted a field surveillance at the C Farm. The following Finding was noted.

Finding 1: Contamination controls were not maintained to prevent the inadvertent transfer of removable contamination to locations outside of radiological areas.

Requirement:

10 CFR 835.1102(a): "Appropriate controls shall be maintained and verified which prevent the inadvertent transfer of removable contamination to locations outside of radiological areas under normal operating conditions."

Discussion:

On March 5, 2009, contamination control deficiencies were noted in the C Farm Change Trailer and in C Farm.

1. An NCO reached across CA/RBA line outside the trailer, brought a potentially contaminated item into the RBA section of the trailer for surveying. The NCO then incorrectly performed a hand-and-foot survey. The survey speed was well in excess of 2"/second, did not survey the entire bottom of the shoes or palms of the hands, and was completed (both alpha and beta-gamma surveys combined) in approximately 10 seconds.

2. Three personnel were observed wearing anti-contamination clothing inside the farm, a posted Contamination Area. Two of the three personnel were observed to have the hoods of a sweatshirt protruding over the collar of the anti-contamination coveralls and onto the back of the anti-Cs. This is a repeat issue communicated to WRPS management on November 19, 2008.

3. There is a broom located in the posted Contamination Area at the C-Farm change trailer. Sweeping inside of a Contamination Area is an extremely poor radiological control practice, and can cause unexpected levels of airborne radioactivity as well as inadvertently spreading contamination beyond CA boundaries.

These issues were communicated to WRPS management for action.

SST RETRIEVAL AND CLOSURE
CONDUCT OF RADIOLOGICAL OPERATIONS CHECKLIST

Work Document Number:_____ **Job Title:**_____ **RWP #:**_____ * S=Sat U=Unsat NO=Not Observed

INDIVIDUAL WORK PRACTICES OBSERVATION	S/U/NO *	COMMENTS
Work activities are as discussed in pre-job briefing. No unplanned work is taking place.		
Work is not impacting other workers or other tasks except as pre-planned.		
Radiological barriers and postings are clearly visible from all approaches.		
Access points to radiological areas are posted with up to date and correct information.		
RWP requirements and radiological hold points (if any) are being complied with.		
Individuals are wearing protective clothing properly. (PPE hoods closed if worn, velcro seals are closed, clothing is not ripped, etc.)		
Personnel are wearing modesty clothing properly. (Sweatshirt or coat hoods being worn on head or tucked into PPE)		
Individuals wear respirators properly. No one is in an airborne area without a respirator, or removes their respirator in an airborne area.		
Contamination is controlled. (Containment's, drapes, glove bags, keeping surfaces moist, bagging, sleeves, are being used as required by the AMW.)		
Radiological workers are proactive in observing and correcting problems (if any).		
Personnel are checking self-reading dosimetry and aware of their radiation exposure.		

Turn completed forms into Keith Gray, 2704HV/C- 213, S7-83

Low Dose Stand-by Areas were designated (for Radiation Areas, High Radiation Areas and Very High Radiation Areas)		
Personnel are minimizing the time they spend in higher dose rate and contamination areas.		
Personnel are handling contaminated items carefully, and change their gloves as appropriate.		
Personnel are trying to minimize the generation of radioactive waste.		
Personnel are following good house keeping practices. Trash and waste materials are being bagged as generated and not left in the area.		
Step off pad area is clean, in good repair. Excessive materials are not piled near step off pads or area boundaries. No materials are part in and part out of contaminated areas.		
Personnel undress in accordance with posted guidelines.		
There are no loose signs in the area.		
No one is eating, drinking or chewing in the area.		
There are no leaking valves, overflowing drains full trash receptacles, etc. in the area.		
The lighting in the work area is sufficient for doing the job. There is not an excessive number of burnt out lights.		
Personnel are working with the correct tools.		
Are communication of radiological levels clear and are the correct units being utilized?		
Was there evidence of workers looking out for one another? Properly communicating cautions, critical tasks, etc.?		
Post Job ALARA review? Were Lessons Learned identified? Were actions taken to communicate Lessons Learned to others?		

_____ Date: _____

(Print and sign name)

Turn completed forms into Keith Gray, 2704HV/C- 213, S7-83

Tailgate

February 2, 2009

washington **river** **protection** solutions

Injuries through January 25, 2009

- No New Injuries
- Employee received contusion to finger when closing lift gate of truck and caught finger in latch.
- Employee was unloading SCBA from van and strained shoulder.
- While hooking up trailer, employee slipped on ice and received strain to back and pain to knee and elbow.

As of January 25, 2009, Tank Operations Contract has worked 1,338,301 hours or 179 days without a Lost Time Workday Injury and 326,937 hours or 53 days without a Recordable Injury.

Congratulations to Tami Bowman – winner of the WRPS safety slogan contest – winning entry Safety – Our way of life!

What is ISMS Phase I and II Verification?

- **Phase I Verification** primarily validates environment, safety, and health requirements identified in contract attachment J.2 are flowed down into implementing documents

- **Phase II Verification** primarily validates the above requirements are effectively implemented in the field.

Key Milestones

- 1/22/09 Requirements reviewed and procedure changes identified
- 2/9/09 Safety basis document changes identified
- 2/16-2/20 Independent assessment of Phase I activities
- 2/18/09 Complete Phase I ESRB presentations
- 2/27/09 Procedure changes completed
- 3/31/09 Phase I declaration of readiness to DOE
- 3/31/09 Submittal of revised safety basis documents
- 4/1-6/15 WRPS Phase II assessments
- 6/1-7/7 ESRB Presentations
- 6/15 Independent assessment of Phase II activities
- 7/15 Phase II declaration of readiness
- 7/17-8/17 DOE Phase I/II assessment

Current Status of Phase I Verification

- 77% complete on Phase I actions
- ESRB presentations are on schedule and going well
- Procedure revisions are progressing
- Review of safety basis documents is main activity remaining for Phase I
- Excellent support from all organizations

New Respiratory Equipment Failure Questionnaire

- When respiratory protection equipment fails, there are specific notifications that must be made and documentation that must be completed.
- A PER must be completed that describes the event of the equipment failure.
- A Respiratory Equipment Failure Questionnaire must be attached to the PER.
  - Improvements have recently been made to the Respiratory Equipment Failure Questionnaire to make it more suitable for all types of respiratory protection equipment.
  - This questionnaire is no longer an attachment to the procedure, but can be found as a link in the procedure to Site Form A-6004-504.
  - The new questionnaire can be completed electronically and printed, or a printed blank copy can completed by hand.

Partial Example of the New Respiratory Equipment Failure Questionnaire

RESPIRATORY EQUIPMENT FAILURE QUESTIONNAIRE

Location of Event: _____ Job/Work Package: _____

Craft: _____ Manager: _____ Date/Time: _____

Name of User: _____ Phone Number: _____

Name of Safety Rep. Notified: _____

Ambient Air Temp.: _____ Atmospheric Data: (check all that apply) Snowing ☐ Fog ☐ Raining ☐ Clear ☐ Windy

TYPE OF RESPIRATORY EQUIPMENT FAILURE

Facepiece: (Full or Half Face) _____
(Make, model, and size)

Cartridge/Filter: _____
(Make, part number, and type)

PAPR: _____
(Make, model, ID number, battery number, facepiece or hood, and filter type)

Check one: SCBA SKA-PAK Cami-Air Bottle Cart

Type/Size of Mask: _____ Hose Length: _____

ID #: _____ Harness Type (Check one): ◯ Old Model ◯ New Model

Cylinder Serial #: _____ Cylinder Type (Check one): ◯ 60 min. ◯ 30 min. ◯ 5 min.

Equipment calibration/expiration date (if applicable): _____

Description of Event: Be as specific as possible to symptoms exhibited, location of leaks, unusual noises, alarm malfunction, air flow (continuous air flow, no air flow, erratic air flow), location where failure occurred, the task being performed, and the location at the time of failure.

_____

Radiological Conduct of Operations

Background

As a result of several issues identified over the past year, a series of topics will be presented over the next few months in an effort to reinforce the attributes necessary to achieve good overall Radiological Conduct of Operations.

Radiological Conduct of Operations Priorities

- Assurance of adequate radiological safety should not be compromised to achieve production, remediation, or research objectives
- WRPS has the same priorities for all work, including radiological work implemented in the following order
  - Safety
  - Compliance
  - Quality
  - Production
- Do work safely, through effective implementation of the Integrated Safety Management Core Functions and Guiding Principles

Conduct of Radiological Operations Key Attributes

- Conduct of Radiological Operations has familiar key attributes
  - Personal Accountability
  - Procedure Compliance
  - Questioning Attitude
  - Stop In the Face of Uncertainty
- If during the use of a procedure a written requirement cannot be responsibly followed, or if unexpected or unplanned conditions or hazards are encountered, work should be stopped and guidance obtained
- Personnel should be familiar with area radiological conditions and be aware of the possibility that changes may occur due to unforeseen reasons.

What Can You Do to Improve Radiological Conduct of Operations?

- Personal Accountability
  - As WRPS radiological workers, we are accountable to do work safely, comply with the standards, and maintain exposures ALARA
- Follow procedures
  - Observe posting and RWP requirements, including any special dosimetry, coverage, or protective clothing requirements
  - Notify your supervisor of any problems with procedures or work steps
- Maintain a questioning attitude
  - Take advantage of the work planning, and pre-job briefings to plan and discuss what can go wrong, and how to deal with it (hazard identification and control, feedback and continuous improvement)
  - Be alert to abnormal or unexpected conditions or indications. Notify your field work supervisor of any abnormal or unexpected conditions or indications

What Can You Do to Improve Radiological Conduct of Operations?

- Don't proceed in the face of uncertainty
  - If during the use of a procedure a written requirement cannot be responsibly followed, or if unexpected or unplanned conditions or hazards are encountered, work should be stopped and guidance obtained.
- Clearly define and understand the work scope
  - Do not perform work outside the approved scope
- Analyze the Hazards
  - Plan for the risks associated with the hazards of the defined work scope
  - Use multi-disciplinary teams if appropriate

What Can You Do to Improve Radiological Conduct of Operations?

- Establish Hazard Controls
  - Engineering
  - Administrative
  - PPE
- Perform Work Within the Controls
  - Confirm readiness, obtain appropriate work authorization, and do work safely in accordance with procedures within the defined controls
- Feedback and Continuous Improvement
  - Take advantage of opportunities to communicate problems, solutions, and experience
  - Utilize Problem Evaluation Requests, post-job reviews, and lessons learned to further improve conduct of radiological operations
  - Use the buddy system when appropriate, watching out for your co-workers and helping them when needed

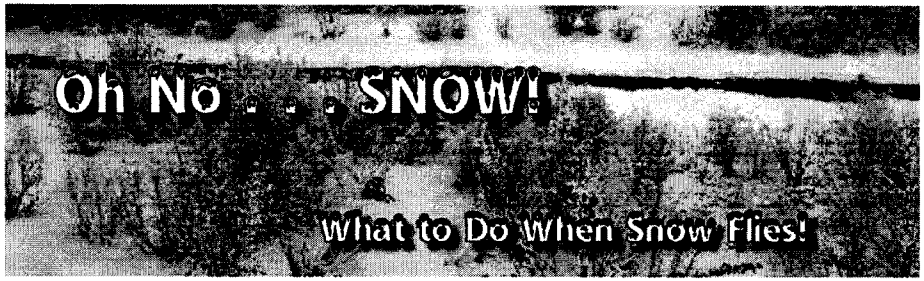

Report any unsafe condition to the Building Administrator and/or Facility Management ASAP:

2440 Stevens	Lou Ann Trovillo / 308-2132
2750-E	Harry Spangler / 373-5458
2752E	Ray Meredith / 521-2459
2704 HV	Ray Meredith / 521-2459
WRPS Parking Areas and Sidewalks	Bill Kelly / 430-4619
Analytical Technical Services (24 hours)	373-2435
Base Operations Shift Office (24 hours)	373-2689

Additional Information for Employees:

- If you notice a building main entrance needs to be cleared of snow or ice, and you're physically able to safely perform the task, clear the main entrance and sprinkle with sand or appropriate anti-slip agent.
- If you feel driving conditions during inclement weather are unsafe, contact your immediate manager to discuss your options.
- For additional information on winterization or cold weather protection, visit: TFC-PLN-45, Snow Removal Plan or contact Washington River Protection Solutions' Safety at 376-HELP.

Tune in for Local Weather and Road Conditions:

Hanford Road Conditions Notification	376-9999/Toll Free 1-800-664-0771 Enter 376-9999, when prompted
Weather Conditions/ Hanford Site Closures	KONA Radio Station 610 AM/105.3 FM Hanford Radio Station 530 AM Yakima Radio KMWX 1460 AM/ KFFM 107.3 FM/KIT 1280 AM 698-4636
Hanford Site Weather Information	373-2875
Hanford Site Meteorologist	373-2716
Inclement Weather HOT LINE (PNNL)	375-2124
DOT Pass Information	1-800-695-7623 / WSDOT Traveler Info 511 www.wsdot.wa.gov/traffic/passes/

WRPS0810-1

Time Card Reporting

- Daily Recording
  - Your time should be entered into TIS as you leave work for the day, or first thing the next morning. If TIS is not filled out you manager and you will receive a system generated TIS review
- Work Charge Authorizations
  - Management should have provided a work charge authorization to you, the authorizations need to be kept by your computer at all times
- Advanced Recording
  - Recording Time in Advance is only allowed if
    - Taking PTB, or other planned absences
    - Attending offsite training, with no access to HLAN
    - Last day of the work week by 9:00 a.m.
    - Anytime that payroll directs you to record early
- Timely Submittal and Approval
  - Employees will have timecards submitted, and managers will approve timecards by 9:00 am on the last day of the work week
    - If employees work over the weekend then timecards are to be approved by 9:00 a.m. Monday morning.
- NO EXCEPTIONS!!!

washington river protection solutions

INTEROFFICE MEMORANDUM

Date: November 19, 2008 WRPS-0800143

To: O. D. Berglund, S7-83

From: K. W. Gray, ALARA Chairman
SST Retrieval and Closure

Subject: SST RETRIEVAL AND CLOSURE CALENDAR YEAR 2009 AS LOW AS REASONABLY ACHIEVABLE GOALS AND TECHNICAL BASIS

Reference: Procedure TFC-ESHQ-RP_ADM-C-13, "ALARA Administration," Revision C-2, dated October 22, 2008.

In accordance with the above referenced procedure, SST Retrieval and Closure is transmitting the "SST Retrieval and Closure Calendar Year 2009 As Low As Reasonably Achievable Goals and Technical Basis," (Enclosure). This interoffice memorandum establishes the SST Retrieval and Closure ALARA goals and the technical basis utilized in determining the whole body and extremity dose goals for CY 2009.

If you have any questions or need additional information, please contact me at 373-4286.

KWG:MYR

Enclosure

cc:	E. J. Adams	S7-83	S. H. Livesey	S7-15
	P. A. Carlson	S7-75	M. J. Powers	S7-75
	J. E. Cato	S7-83	C. R. Reichmuth	S7-15
	W. L. Duffy	S7-83	W. E. Ross	S7-75
	M. T. Hughey	S7-75	S. A. Saunders	S7-83
	T. A. Kenworthy	S7-75	D. K. Smith	S7-83
	D. A. Klug	S7-75	Project Files:	R1-29
	K. D. Lawing	S7-15	SST Retrieval &	
	K. J. Lawing	S7-15	Closure	
	M. A. Lindholm	S7-83	KWG File/LB	

WRPS-0800143

Enclosure

SST RETRIEVAL AND CLOSURE
CALENDAR YEAR 2009 AS LOW AS REASONABLY ACHIEVABLE
GOALS AND TECHNICAL BASIS

Consisting of 4 pages, including coversheet

SST RETRIEVAL AND CLOSURE
CALENDAR YEAR 2009 AS LOW AS REASONABLY ACHIEVABLE GOALS AND TECHNICAL BASIS

1. WHOLE BODY COLLECTIVE DOSE

Maintain the calendar year (CY) 2009 annual occupational radiological whole-body dose to radiological workers assigned to SST Retrieval and Closure to levels ≤ 2.5 person-rem.

Basis: This goal is based on completion of the following activities to be performed by SST Retrieval and Closure. Dose estimates are based on previous similar activities performed by SST Retrieval and Closure in the past several years.

- 241-C-110 Retrieval System Construction Activities (0.3 Rem).*
- 241-C-104 Retrieval System Construction Activiites (0.7 Rem).*
- 241-C-110 Retrieval (0.3 Rem).
- 241-C-104 Retrieval (0.7 Rem).
- Vadose Support Activities (0.5 Rem).

Goal reporting will include:

a) Average dose to a radiological worker.
b) Maximum dose to a radiological worker.
c) Number of dose assessments for lost/damaged dosimeters.

2. EXTREMITY COLLECTIVE DOSE

Maintain the CY 2009 annual occupational radiological extremity dose to radiological workers assigned to SST Retrieval and Closure to levels ≤ 9.0 person-rem.

Basis: This goal is based upon extremity exposure being approximately four times higher than whole body exposure during previous similar work activities. This exposure estimate was then reduced by 10 percent to drive application of the as low as reasonably achievable (ALARA) measures within the organization.

Goal reporting will include:

a) Average extremity dose to radiological workers.
b) Maximum extremity dose to a radiological worker.
c) Number of dose assessments for lost/damaged extremity dosimeters.

3. EXPOSURE INFORMATION

The SST Retrieval and Closure ALARA Program will provide facility management with periodic exposure reports of anomalous exposures within their work groups (using report REXER11 provided by Pacific Northwest National Laboratory).

*Construction forces support work (only accounts for dose received by Washington River Protection Solutions support personnel).

4. CONTAMINATION CONTROL

Maintain the number of skin and/or clothing contaminations above the U. S. Department of Energy (DOE) reportable levels at SST Retrieval and Closure at zero.

Number of contaminated wounds.
Number of facial contaminations.

5. EXPOSURE CONTROL

Maintain the number of personnel intakes of radioactive materials above the DOE reportable levels at SST Retrieval and Closure at zero.

6. ALARA COMMUNICATION - INTERNAL

SST Retrieval and Closure will provide a minimum of one employee to assist in the development of a booth representing Tank Operations Contractor (TOC) ALARA Program for the CY 2009 Health and Safety EXPO, as appropriate.

Estimated Start Date: January 2009.
Estimated Completion Date: May 31, 2009.

7. TANK OPERATIONS CONTRACTOR ALARA COMMITTEE SUPPORT

Maintain 100 percent attendance, of each SST Retrieval and Closure duty area assigned as members of the TOC ALARA Committee, at scheduled TOC ALARA Committee meetings.

8. ALARA AWARENESS

SST Retrieval and Closure will provide a minimum of one representative on the TOC ALARA Awareness Subcommittee to develop a minimum of two ALARA Awareness Campaigns with a focus on improving the overall ALARA performance or awareness.

Estimated Start Date: January 2009.
Estimated Completion Date: June 30, 2009.

9. RADIOLOGICAL CONTROL IMPROVEMENTS

Members of the SST Retrieval and Closure ALARA Committee will conduct a minimum of one review each quarter of the performance of radiological work activities with a focus on improving conduct of radiological operations.

WRPS-PER-2009-0424

EVENT	NON-EVENT	DIFFERENCE/ CHANGE	EFFECT
It was reported in DOE-ORP Operational Awareness Report #5914 dated 3/12/2009 that on 3/5/2009, that: Contamination controls were not maintained to prevent the inadvertent transfer of removable contamination to location outside of radiological areas." Specific items identified include: 1) An NCO was observed reaching across a CA/RBA line and bringing potentially contaminated item into the RBA; 2) The same NCO was then observed incorrectly performing a hand/foot frisk; and, 3) Three personnel were observed incorrectly wearing PCs (i.e., sweatshirt hoods outside of the coveralls collar).	Personnel would perform good radiological work practices without prompting.	Management has not performed adequate overview of work activities to ensure proper radiological work practices are being performed in accordance with management expectations.	There was no adverse affects as no contamination spread or personnel contamination occurred as a result of this deficiency.

A3B2C04 – Previous success in use of rule reinforced continued use of rule.

A4B1C04 – Management follow-up or monitoring of activities did not identify problem.

Task# WRPS-PER-2009-0424.1

E-STARS[R] Report
Task Detail Report
07/09/2009 1050

TASK INFORMATION			
Task#	WRPS-PER-2009-0424.1		
Subject	WRPS-PER-2009-0424; RES; Evaluate 2 quarters worth of conduct of operations MOPs at the EAPC/ALARA committee and identify weaknesses that may need fut		
Parent Task#	WRPS-PER-2009-0424	**Status**	Open
Reference	WRPS-PER-2009-0424	**Due**	08/13/2009
Originator	^PER CAs	**Priority**	Medium
Originator Phone		**Category**	PER
Origination Date	05/06/2009 1400	**Generic1**	None
Remote Task#		**Generic2**	None
Deliverable	PER Review	**Generic3**	None
Class	None	**View Permissions**	Global
Instructions	*No Instructions*		

ROUTING LISTS

1	Corrective Action	Active
	Evaluate 2 quarters worth of conduct of operations MOPs at the EAPC/ALARA committee and identify weaknesses that may need futher action. Closure documentation would consist of meeting minutes from the EAPC/ALARA meetings in May and July. RESPONSIBLE MANAGER: When this corrective action is complete, enter a closure statement in E-STARS and close the E-STARS subtask. Refer to the Problem Evaluation Request procedure TFC-ESHQ-Q-C-C-01, Section 4.4 for closure documentation requirements	
	• Gray, Keith W - Assign - Awaiting Response - Due Date - 08/07/2009 0000 *Instructions:*	
	• Smith, Donald (Kent) - Review - Awaiting Response - Due Date - 08/11/2009 0000 *Instructions:*	

ATTACHMENTS

Attachments	1. Link to PER 2. Op Awareness #5914.pdf 3. SST CONDUCT OF RADIOLOGICAL OPERATIONS ISSUES.Tailgate Addition.6-1-09.pptx 4. SST RETRIEVAL AND CLOSURE Conduct of Rad Ops Checklist.docx 5. Tailgate 02-02-09_1.pdf 6. WRPS-08-00143.CY2009 ALARA Goals and Tech Basis.pdf 7. WRPS-PER-2009-0424-Change Analysis.docx

COMMENTS

No Comments

TASK DUE DATE HISTORY

Modified	05/06/2009 1400 - ^PER CAs	**New Due Date**	08/13/2009 0000
Modified	05/06/2009 1400 - ^PER CAs	**New Due Date**	08/17/2009 0000

SUB TASK HISTORY

No Subtasks

-- end of report --

SST CONDUCT OF RADIOLOGICAL OPERATIONS ISSUES

- During the past month several Radiological Conduct of Operations issues were identified at SST Retrieval and Closure during Management Observations.
  - In two cases hoods were identified outside of protective clothing and in one case hair was outside the clothing. In each of the cases of these cases co-workers corrected the situation. Although this is a good thing, it would have been better if the co-workers had identified these issues prior to entry into the CA. Please continue to work on improving our Conduct of Radiological Operations and assist your fellow worker in identifying dress issues prior to entry into the farm.
  - In one other case a cell phone was not being properly used inside the CA.

Save

Problem Evaluation Request (PER)

WRPS-PER-2009-0425
Closed 03/19/2009 08:15

PER No	Date of Discovery	Time of Discovery (24:00)	Project
WRPS-PER-2009-0425	03/17/2009	14:40	C Farm-RC

Location

C Farm

How Was Problem Discovered

DOE-ORP

Description of Concern or Problem

It was reported in DOE-ORP Operational Awareness Report #5922 dated 3/12/2009 that on 3/112009,

Finding: Airflow is not controlled from areas of lesser to greater removable contamination in the C Farm Egress Tent."

Specifically, a propane heater with two exhaust trunks was found in the C Farm Egress Tent with one exhaust hose in the RBA and the other in the CA.

Requirement Not Satisfied	Source Document Number

Equipment Identification Number	System Identification

Immediate actions Taken or Planned

The situation was reported to WRPS management and the hose was relocated to the proper location to prevent spread of contamination.

This PER was generated to document the event.

Recommended Corrective actions

Assign this PER to C/R RadCon as Trend Only as the corrective action are already completed.

Originator Contact

Please let me know if you have specific questions.

Originators Name	Originators ID	Originators Phone	Date Initiated
Bickel, Eric E	H3764153	(509) 372-1470	03/17/2009

SHIFT OPERATIONS REVIEW

Title

DOE-ORP Operational Awareness Report #5922

How Discovered	Agency
FACREP Surveillance	

Reportability	SSC Operability	Operability Review	Comp Measures Req
Non-Reportable	N/A	N/A	

Describe actions Taken or Recommended

Forward PER to Facilities Management. No additional Base Ops Shift Office actions required at this time.

SO Reviewer Name	SO Reviewer ID	SO Reviewer Phone	SO Review Date
Johnson, Brian A	H0003531	(509) 373-2696	03/17/2009

SCREENING

PER Significance Level	
Trend Only	

Independent Assessment Review	Occurrence Report Number	Externally Identified	
No		Yes	

Assigned Responsible Manager	Facilities Rep / SSO	Safety Management Rep	
Adams, Ed J			
Program		**Safety Management Program**	
• N/A		• Radiological Control	
PER Screening Comments			
Hose was relocated. (Nancy Brown 03/18/09)			
Causal Code			
MGT/Comm/Train	**Human Performance**	**GEMS**	**Equip/Eng/Other**
Failed Barrier	**ORPS Code**	**Functional Area**	**Work Process**
	Not Applicable	Radiation Protection	• Radiological Contamination Control
ISMS	**Consequence Code**		
Perform work within the controls	• Contam - Conduct of Ops - Conduct of radiological operations issues identified that resulted in or could potentially result in failure to adequately control contamination		
PER Screening Chair	**PER Screening Chair ID**	**PER Screening Chair Phone**	**PER Screening Date**
Brown, Nancy L	H0088797	(509) 373-0992	03/18/2009
PAAA REVIEW			
PAAA Screening	**PAAA Codes**	**Function Codes**	
PAAA, Non-NTS Reportable	• 10 CFR 835.1102 (a)	• RadCon Inadequate Contamination Control	
NTS Report Number	**NTS Report Date**		
Repetitive / Recurrent	**Programmatic**	**Intentional Violation / Misrepresentation**	
No	No	No	
PAAA Screening Comments			
PAAA Reviewer Name	**PAAA Review Date**		
Anderson, Craig E	03/18/2009		
PAAA Approver Name	**PAAA Approve Date**		
Anderson, Craig E	03/19/2009		
SENIOR MANAGEMENT REVIEW/CONCURRENCE			
TF Operations Morning Leadership Call			
TF Operations Morning Leadership Call is no longer required.			
Instructions for Responsible Manager			
Senior Management	**Sr Mgmt ID**	**Sr Mgmt Phone**	**Sr Mgmt Review Date**
Owen, Annette	H0054042	(509) 372-0533	03/19/2009
ATTACHMENTS			
Link to PER			

OP Awareness #5922.pdf		
AUDIT HISTORY		
Change Date	**Auditor**	**Comments**
03/18/2009 11:59	Brown, Nancy L	'Description of Concern or Problem' was changed -- added : "Finding" with the concurrenance of the PER originator.

-- End of Report --
03/19/2009 08:15 AM

Task# WRPS-PER-2009-0425			
E-STARS[R] Report Task Detail Report 03/19/2009 0815			
TASK INFORMATION			
Task#	WRPS-PER-2009-0425		
Subject	Trend; DOE-ORP Operational Awareness Report #5922		
Parent Task#		Status	CLOSED 03/19/2009
Reference		Due	03/19/2009
Originator	^PER Coordinator	Priority	Medium
Originator Phone		Category	PER
Origination Date	03/17/2009 1440	Generic1	None
Remote Task#		Generic2	None
Deliverable	PER Review	Generic3	None
Class	None	View Permissions	Global
Instructions	*No Instructions*		
ROUTING LISTS			
1	Review Initial PER		Inactive
	Review New PER		
	• ^SO(Johnson, Brian A) - Review - Concur - 03/17/2009 2134 *Instructions:*		
	• ^PER Screening(Brown, Nancy L) - Review - Concur - 03/18/2009 1334 *Instructions:*		
	• ^Mgr Review(Owen, Annette) - Review - Concur - 03/19/2009 0808 *Instructions:*		
ATTACHMENTS			
Attachments	1. Link to PER 2. OP Awareness #5922.pdf		
COMMENTS			
No Comments			
TASK DUE DATE HISTORY			
Modified	03/17/2009 1440 - ^PER Coordinator	New Due Date	03/19/2009 1630
SUB TASK HISTORY			

Task# WRPS-PER-2009-0425
No Subtasks
-- end of report --

Department of Energy
Operational Awareness

OpAware: Project/Issue Detail

Tank Farms

Richard Jansons		Cross	
Rpt #:	Date Entered:	Date Observed:	Hours in Field:
5922	03/12/2009	03/11/2009	6 hours

Entry Type: Routine Oversight

Include in CIR: No

Title:

RadCon walkdown of Tank Farm facilities

Summary:

On March 11, 2009, I conducted a field walk down of radiological conditions at various Tank Farms and noted the following:

Finding: Radiological survey maps are not maintained as required at C Farm Change trailer.

Requirements:

TFRCM Article 551.10: "Results of current surveys or survey maps should be conspicuously posted to inform personnel of the radiological conditions."

TFC-ESHQ-RP_MON-P-10, "Required Radiological Surveillances," Rev. D-8, Section 4.3 step 2:
"Ensure status maps are maintained current and contain sufficient information to allow non-facility emergency responders to evaluate the radiological hazards in the facility."

TFC-ESHQ-RP_MON-P-10, "Required Radiological Surveillances," Rev. D-8, Section 4.3 step 6:
"Update the survey map with the following information, as applicable: (7.1.1.d)
- General area dose rates.
- High and very high radiation areas.
- Hot spot dose rates.
- Contamination levels.
- High contamination areas.
- Airborne radioactivity areas.
- Date of last survey and surveyor's name(s) is be included.
- A legend to interpret symbols or data presented."

Discussion:

The following issues were noted with the radiological status map at the C Farm Change trailer:
- The radiological status map at the C Farm Change trailer was found to have no notation of any High Radiation Areas, although a dose rate of 100 mrem/hr was noted on the map.
- No contamination levels were provided on the survey map, although the entire C Farm area is posted at least as a Contamination Area, with some smaller areas posted as a High Contamination Area.
- The legend on the map is covered by tape containing the name and date of the last survey. It appears from the legend that any markings made in blue (there were none present on the map) indicate contamination levels; markings made in red are dose rates at a distance of 30 cm.
- It is unclear from the map whether dose rates are at 30 cm or contact. There are two "red" numbers present in pairs on the maps, with no indication from the legend or other source if one is meant to be a contact dose rate.
- No area boundaries or indications of the extent of radiological postings are present on the map. There is an indication that one area of C Farm is posted "ARA" but no boundary of the ARA is provided on the status map. Only the letters "ARA" are written on the map.
- No hot spots were identified on the map.

Finding: Airflow is not controlled from areas of lesser to greater removable contamination in the C Farm Egress Tent.

Requirement:

TFRCM Article 337.3: "Control and direct airflow from areas of lesser to greater removable contamination."

Discussion:

On March 11, 2009, a propane heater with two exhaust trunks was found in the C Farm Egress Tent, with one exhaust hose in the Radiological Buffer Area (RBA) for Contamination Control, and the other exhaust hose in the Contamination Area/RBA Boundary. Both exhaust hoses could have been located in the radiologically clean area of the egress tent.

Finding: Radiological Buffer Area signs at 241-B and 241-BY are not correctly posted.

Discussion:

Two Radiological Buffer Areas for contamination control were not completely posted with RBA signs indicating "exit survey required." The west vehicle gate at 241-B Farm is a RBA for contamination control. Only 1 of 3 RBA signs indicated "exit survey required." The RBA for contamination control on the east side of 241-BY contains 3 of 4 RBA signs indicating "exit survey required."

Two other observed issues:

1. The WIDS Site 200-W-54 located on the East side of S Farm Complex is a large posted Contamination Area. Approximately 50 feet of the rope and Contamination Area signs on the south side of the WIDS site was not in place. I immediately notified the Base Operations Radiological Control Manager for corrective action.

2. At MO-296 north of the S Farm Complex, a large amount of tumbleweeds had blown into a posted Contamination Area. I immediately notified the Base Operations Radiological Control Manager for corrective action.

All of these issues were communicated to WRPS Radiological Control management for review and action.

Save

Problem Evaluation Request (PER)

WRPS-PER-2009-0432
In Process/Work

PER No	Date of Discovery	Time of Discovery (24:00)	Project
WRPS-PER-2009-0432	03/18/2009	16:00	Business Ops

Location

All Tank Farms

How Was Problem Discovered

General Observation

Description of Concern or Problem

High radiation areas that are created in the farm are often fenced with temporary chain link fence. For double shell tank farms this type fence in present in 241-AW around the old primary exhausters, 241-AP inside the shielded HEPA filter housing, 241-SY around the SY-101 Portable Pump pit, around SY01A SY02A pits.
It is unclear whether the proper engineering analysis was completed to ensure these modification of the farms are sound.

Requirement Not Satisfied	Source Document Number

Equipment Identification Number	System Identification
	Ventilation Tank Primary

Immediate actions Taken or Planned

This PER was generated

Recommended Corrective actions

Engineering to determine is the current installation of fencing around high radiation areas in tank farms meets the installation requirements our nuclear and safety requirements and allows continued operation of tank farm system.

Originator Contact

No

Originators Name	Originators ID	Originators Phone	Date Initiated
Brooks, Rocky L	H0095655	(509) 373-9424	03/18/2009

SHIFT OPERATIONS REVIEW

Title

High radiation areas that are created in farms

How Discovered	Agency
self-ID prior to event	

Reportability	SSC Operability	Operability Review	Comp Measures Req
Non-Reportable	N/A	N/A	

Describe actions Taken or Recommended

Assign PER to engineering for evaluation, no additional Base Ops Shift Office actions required at this time.

SO Reviewer Name	SO Reviewer ID	SO Reviewer Phone	SO Review Date
Johnson, Brian A	H0003531	(509) 373-2696	03/18/2009

SCREENING

PER Significance Level	
PIE/CIM	

Independent Assessment Review	Occurrence Report Number	Externally Identified	
No		No	

Assigned Responsible Manager	Facilities Rep / SSO	Safety Management Rep	
Knight, Mark A			

Program	Safety Management Program

• N/A	• Engineering Configuration Management • Industrial Safety

PER Screening Comments

Contact PER Originator. Determine if temporary fencing is structurally adequate to withstand Hanford weather conditions and nearby work activities. If fencing should fall, determine the potential impact on Safety Significant equipment and personnel.
cc: Tom Mackey, Mark Roberts, Bill Gaydosh
(Nancy Brown 03/19/09)

Causal Code

MGT/Comm/Train	**Human Performance**	**GEMS**	**Equip/Eng/Other**
Failed Barrier	**ORPS Code**	**Functional Area**	**Work Process**
	Not Applicable	Operations	• Engineering Evaluation • Safety Inspections
ISMS	**Consequence Code**		
Identify and analyze hazards	• Safety Concerns - Safety concerns, suggestions, and potential safety issues		
PER Screening Chair	**PER Screening Chair ID**	**PER Screening Chair Phone**	**PER Screening Date**
Brown, Nancy L	H0088797	(509) 373-0992	03/19/2009

PAAA REVIEW

PAAA Screening	**PAAA Codes**	**Function Codes**	
PAAA, Non-NTS Reportable	• 10 CFR 835.1002 (d)	• RadCon Entry Control	
NTS Report Number	**NTS Report Date**		
Repetitive / Recurrent	**Programmatic**	**Intentional Violation / Misrepresentation**	
No	No	No	

PAAA Screening Comments

PAAA Reviewer Name	**PAAA Review Date**	
Anderson, Craig E	03/19/2009	
PAAA Approver Name	**PAAA Approve Date**	
Anderson, Craig E	03/31/2009	

SENIOR MANAGEMENT REVIEW/CONCURRENCE

TF Operations Morning Leadership Call

TF Operations Morning Leadership Call is no longer required.

Instructions for Responsible Manager

Evaluate suggestion, enter comments and required actions on PIE/CIM tab of the PER. Disposition in accordance with TFC-ESHQ-Q_C-C-01, Problem Evaluation Request.

Senior Management	**Sr Mgmt ID**	**Sr Mgmt Phone**	**Sr Mgmt Review Date**
Owen, Annette	H0054042	(509) 372-0533	03/23/2009

CAUSE ANALYSIS

Description of Occurrence

Extent of Condition

Safety Significance

Generic Implications

Remedial Corrective Action

Causal Analysis, Apparent Cause and/or Root Cause Analysis

CORRECTIVE ACTIONS

Actionee	Action Due Date	E-STARS Number
Haq, Mian A	07/15/2009	WRPS-PER-2009-0432.1

Action

Evaluate temporary chain-link fencing inside the double-shell tank farms to determine what are the applicable nuclear and safety requirements and if the fencing meets those requirements.

Deliverable: Engineering evaluation or documentation for the acceptability of all temporary chain-link fencing inside the double-shell tank farms. Include e-mail correspondance to Operations as a deliverable for any temporary chain-link fence that is deemed unacceptable.

Corrective Action Attachments

PIE/CIM

Evaluation of PIE/CIM Initiative

Engineering has reviewed this issue and will launch one corrective action to evaluate temporary chain-link fencing inside the double-shell tank farms to determine the applicable nuclear and safety requirements and if the fencing meets those requirements.

ATTACHMENTS

Link to PER

AUDIT HISTORY

Change Date	Auditor	Comments
03/23/2009 08:06	Owen, Annette	Responsible Manager Task Launched by Owen, Annette
05/12/2009 09:30	Glaman, Linda R	Corrective actions Launched by Glaman, Linda R

-- End of Report --
07/09/2009 10:54 AM

Task# WRPS-PER-2009-0432

E-STARS[R] Report
Task Detail Report
07/09/2009 1054

TASK INFORMATION			
Task#	WRPS-PER-2009-0432		
Subject	PIE; High radiation areas that are created in farms		
Parent Task#		**Status**	Open
Reference		**Due**	08/02/2009
Originator	^PER Coordinator	**Priority**	Medium
Originator Phone		**Category**	PER
Origination Date	03/18/2009 1635	**Generic1**	None
Remote Task#		**Generic2**	None
Deliverable	PER Review	**Generic3**	None
Class	None	**View Permissions**	Global
Instructions	*No Instructions*		

ROUTING LISTS

1	Corrective actions Routing Lis	Active
	To launch Corrective actions.	
	• ^PER CAs - Assign - Awaiting Response - Due Date - 07/29/2009 0000 *Instructions:*	
2	Responsible Manager	Inactive
	Evaluate suggestion, enter comments and required actions on PIE/CIM tab of the PER. Disposition in accordance with TFC-ESHQ-Q_C-C-01, Problem Evaluation Request.	
	• Knight, Mark A - Assign - Completed with comments - 05/12/2009 0730 *Instructions:* ↳ *Routing List:* Route List - Inactive *Instructions:* • Haq, Mian A - Assign - Completed with comments - 05/11/2009 1352	
3	Review Initial PER	Inactive
	Review New PER	
	• ^SO(Johnson, Brian A) - Review - Concur - 03/18/2009 1847 *Instructions:*	
	• ^PER Screening(Brown, Nancy L) - Review - Concur - 03/19/2009 1428 *Instructions:*	
	• ^Mgr Review(Owen, Annette) - Review - Concur - 03/23/2009 0806 *Instructions:*	

ATTACHMENTS

Attachments	1. Link to PER

COMMENTS

Poster	Haq, Mian A (Bragg, David A) - 05/11/2009 1352
	Completed
	Engineering has reviewed the issue identified in this PER and will launch one corrective action

Task# WRPS-PER-2009-0432

	to evaluate temporary chain-link fencing inside the double-shell tank farms to ensure it is properly installed and meets all applicable nuclear and safety requirements for continued use in the farms. The PER originator declined notification in the resolution of WRPS-PER-2009-0432.
Poster	Knight, Mark A (Bragg, David A) - 05/12/2009 0730
	Completed
	Engineering has reviewed this issue and will launch one corrective action to evaluate temporary chain-link fencing inside the double-shell tank farms to determine the applicable nuclear and safety requirements and if the fencing meets those requirements. The PER originator declined involvement in the disposition of WRPS-PER-2009-0432.

TASK DUE DATE HISTORY

Modified	05/12/2009 0930 - ^PER Coordinator	**New Due Date**	08/02/2009 0000
Modified	05/12/2009 0930 - ^PER Coordinator	**New Due Date**	07/29/2009 0000
Modified	03/23/2009 0806 - ^PER Coordinator	**New Due Date**	05/17/2009 1630
Modified	03/18/2009 1635 - ^PER Coordinator	**New Due Date**	03/20/2009 1630

SUB TASK HISTORY

Subtask#	WRPS-PER-2009-0432.1				
Subject	WRPS-PER-2009-0432; PIE; Evaluate temporary chain-link fencing inside the double-shell tank farms to determine what are the applicable nuclear and saf				
Originator	^PER CAs				
	Routing List	Corrective Action			
		Assignee	Haq, Mian A	**Response**	
		Assignee	Knight, Mark A	**Response**	

-- end of report --

Task# WRPS-PER-2009-0432.1

E-STARS[R] Report
Task Detail Report
07/09/2009 1054

TASK INFORMATION			
Task#	WRPS-PER-2009-0432.1		
Subject	WRPS-PER-2009-0432; PIE; Evaluate temporary chain-link fencing inside the double-shell tank farms to determine what are the applicable nuclear and saf		
Parent Task#	WRPS-PER-2009-0432	**Status**	Open
Reference	WRPS-PER-2009-0432	**Due**	07/25/2009
Originator	^PER CAs	**Priority**	Medium
Originator Phone		**Category**	PER
Origination Date	05/12/2009 0930	**Generic1**	None
Remote Task#		**Generic2**	None
Deliverable	PER Review	**Generic3**	None
Class	None	**View Permissions**	Global
Instructions	*No Instructions*		

ROUTING LISTS		
1	Corrective Action	Active
	Evaluate temporary chain-link fencing inside the double-shell tank farms to determine what are the applicable nuclear and safety requirements and if the fencing meets those requirements. Deliverable: Engineering evaluation or documentation for the acceptability of all temporary chain-link fencing inside the double-shell tank farms. Include e-mail correspondance to Operations as a deliverable for any temporary chain-link fence that is deemed unacceptable. RESPONSIBLE MANAGER: When this corrective action is complete, enter a closure statement in E-STARS and close the E-STARS subtask. Refer to the Problem Evaluation Request procedure TFC-ESHQ-Q-C-C-01, Section 4.4 for closure documentation requirements	
	• Haq, Mian A - Assign - Awaiting Response - Due Date - 07/15/2009 0000 *Instructions:*	
	• Knight, Mark A - Review - Awaiting Response - Due Date - 07/19/2009 0000 *Instructions:*	

ATTACHMENTS	
Attachments	1. Link to PER

COMMENTS
No Comments

TASK DUE DATE HISTORY			
Modified	05/12/2009 0930 - ^PER CAs	**New Due Date**	07/25/2009 0000
Modified	05/12/2009 0930 - ^PER CAs	**New Due Date**	07/29/2009 0000

SUB TASK HISTORY
No Subtasks

-- end of report --

Save

Problem Evaluation Request (PER)

WRPS-PER-2009-0437
In Process/Work

PER No	Date of Discovery	Time of Discovery (24:00)	Project
WRPS-PER-2009-0437	03/18/2009	09:00	Base Ops

Location

All Tank Farms

How Was Problem Discovered

EPA

Description of Concern or Problem

On 3/0/08, the EPA issued a Notice of Violation to DOE, ORP, of violations of the RCRA as implemented through the WAC 173-303, based on inspections it conducted September 24 and 25, 2008. The NOV identified failure to properly label universal waste lamps as required by WAC 173-303-573(21)(d), provide the universal waste lamps date of generation documentation as required by WAC 173-303-573 (22)(c), properly label universal waste batteries required by WAC 173-303-573(21)(a) and provide the universal waste batteries date of generation documentation required by WAC 173-303-573 (22)(c). The WRPS Base Operations Shift manager received a copy of the NOV on 3/18/09. As a result the event was categorized 9(2)SC4 and reported by WRPS on behalf of ORP.

The WRPS employees at the 616 Facility were working to HNF-EP-0863 which is an interpretation of the recycle process from the WA State Department of Ecology. Per this document, recyclable materials are not declared waste until they are received at the Hanford Centralized Consolidation/Recycling Center.

Requirement Not Satisfied	Source Document Number
WAC 173-303-573	
Equipment Identification Number	**System Identification**
NA	

Immediate actions Taken or Planned

Evaluated the basis for the EPA NOV and met with DOE ORP, DOE RL and other Hanford Contractors as all use the Hanford Centralized Consolidation/Recycling Center. DOE ORP is sending a response to the EPA letter requesting a 30-day extension and requesting further explanation of the Notice of Violation.

Recommended Corrective actions

1.) Evaluate the recycle process to determine if changes are required.
2.) No further action should be taken until direction is received from ORP and a clarification is received from EPA

Originator Contact

I would like to help define the problem

Originators Name	Originators ID	Originators Phone	Date Initiated
Nielsen, Judith A	H0046919	(509) 373-6732	03/19/2009

SHIFT OPERATIONS REVIEW

Title

EPA issued a Notice of Violation to DOE, ORP

How Discovered	Agency
Externally Identified	

Reportability	SSC Operability	Operability Review	Comp Measures Req
SC-4	N/A	N/A	

Describe actions Taken or Recommended

Base Ops Shift Office categorized event as a group 9(2) SC-4 occurrence, and completed proper notifications. No further actions required.

SO Reviewer Name	SO Reviewer ID	SO Reviewer Phone	SO Review Date

Strasser, David W	H0075556	(509) 373-2689	03/19/2009
SCREENING			
PER Significance Level			
PER with Resolution			
Independent Assessment Review	**Occurrence Report Number**	**Externally Identified**	
Yes	EM-RP--WRPS-TANKFARM-2009-0004	Yes	
Assigned Responsible Manager	**Facilities Rep / SSO**	**Safety Management Rep**	
Nielsen, Judith A		Day, Paul T (inactive)	
Program		**Safety Management Program**	
• N/A		• Environmental Management	
PER Screening Comments			
PER w/ Res with Formal Apparent Cause Analysis -- non-compliance with regulatory requirements. (Nancy Brown 03/23/09)			
Causal Code			
MGT/Comm/Train	**Human Performance**	**GEMS**	**Equip/Eng/Other**
Failed Barrier	**ORPS Code**	**Functional Area**	**Work Process**
	written notification noncompliancy/outside agency	Environmental Protection	• Environmental Management
ISMS	**Consequence Code**		
Perform work within the controls	• Environmental Enforcement Action - A notice of environmental enforcement action or non-compliance		
PER Screening Chair	**PER Screening Chair ID**	**PER Screening Chair Phone**	**PER Screening Date**
Brown, Nancy L	H0088797	(509) 373-0992	03/23/2009
PAAA REVIEW			
PAAA Screening	**PAAA Codes**	**Function Codes**	
Not subject to PAAA			
NTS Report Number	**NTS Report Date**		
Repetitive / Recurrent	**Programmatic**	**Intentional Violation / Misrepresentation**	
No	No	No	
PAAA Screening Comments			
PAAA Reviewer Name	**PAAA Review Date**		
Anderson, Craig E	04/01/2009		
PAAA Approver Name	**PAAA Approve Date**		
Anderson, Craig E	04/01/2009		
SENIOR MANAGEMENT REVIEW/CONCURRENCE			
TF Operations Morning Leadership Call			
TF Operations Morning Leadership Call is no longer required.			
Instructions for Responsible Manager			
Review the PER Screening Tab and Senior Manager Review for requested data. Complete the task in E-STARS in accordance with TFC-ESHQ-Q_C-C-01, and TFC-ESHQ-Q_ADM-C-12 Apparent Cause Analysis & Corrective Action Planning.			
Senior Management	**Sr Mgmt ID**	**Sr Mgmt Phone**	**Sr Mgmt Review Date**

Owen, Annette	H0054042	(509) 372-0533	03/24/2009

CAUSE ANALYSIS

Description of Occurrence

During an EPA inspection it was identified that the recycle containers at 616 were not labled and managed per the Universal Waste Standards in WAC 173-303-573. Recycle materials were not being identified as Universal Waste at the point of generation, but were being identified as waste once they were received at the CCRC.

Extent of Condition

The Hanford Site is working to the Fluor HNF-EP-0863, "Management Plan for Recycable Materials", Administered by Hanford's Centralized Consolidation/Recycling Center, this problem exists across the Tank Farms organization and across the Hanford Site.
All contractors and DOE offices have met to discuss the solution and make a consolidated agreement on the response to the EPA NOV.

Safety Significance

None - the material being collected for recycle is being managed safely.

Generic Implications

Remedial Corrective Action

WRPS in conjunction with a team from the CCRC, other Hanford Contractors and the DOE offices is reviewing the process and providing a joint response to EPA.

Causal Analysis, Apparent Cause and/or Root Cause Analysis

Causal Analysis - Why Analysis (HNF-EP-0863 which includes referenced letters is attached)
Problem Statement - EPA Identified Universal Waste in 616 that was not properly labeled.
Why - The Waste Operations Organization was working to the HNF-EP-0863, "Management Plan for Recycable Materials",
Why - This is the site recycle document and all recycle materials are managed to this document
Why - In 2001, a letter was issued to the DOE approving use of this document/process
Why - The HNF-EP-0863 was developed based on a regulatory interpretation by the WA Dept. of Ecology

ATTACHMENTS

Draft Letter from Lori Huffman e-mail.doc

EM-RP--WRPS-TANKFARM-2009-0004.htm

EPA NOV 3-3-09.pdf

HNF-EP-0863.pdf

Link to PER

AUDIT HISTORY

Change Date	Auditor	Comments
03/24/2009 07:57	Owen, Annette	Responsible Manager Task Launched by Owen, Annette
03/26/2009 14:05	Brown, Nancy L	'How Discovered' was changed.
04/01/2009 10:36	Anderson, Craig E	PAAA Screening Changed PAAA Codes Changed PAAA Function Codes Changed

-- End of Report --
07/09/2009 10:55 AM

Task# WRPS-PER-2009-0437

E-STARS[R] Report
Task Detail Report
07/09/2009 1055

TASK INFORMATION			
Task#	WRPS-PER-2009-0437		
Subject	RES; EPA issued a Notice of Violation to DOE, ORP		
Parent Task#		**Status**	Open
Reference		**Due**	05/11/2009
Originator	^PER Coordinator	**Priority**	Medium
Originator Phone		**Category**	PER
Origination Date	03/19/2009 1138	**Generic1**	None
Remote Task#		**Generic2**	None
Deliverable	PER Review	**Generic3**	None
Class	None	**View Permissions**	Global
Instructions	*No Instructions*		

ROUTING LISTS

1	Responsible Manager	Active
	Review the PER Screening Tab and Senior Manager Review for requested data. Complete the task in E-STARS in accordance with TFC-ESHQ-Q_C-C-01, and TFC-ESHQ-Q_ADM-C-12 Apparent Cause Analysis & Corrective Action Planning.	
	• Nielsen, Judith A - Assign - Completed with comments - 04/30/2009 1637 *Instructions:*	
	• Nielsen, Judith A - Assign - Completed with comments - 05/04/2009 1430 *Instructions:* Did you contact the originator about the PER? Document your contact in the response window.	
	• ^Independent Assessment Review(Brown, Robert L) - Review - Concur with comments - 05/28/2009 1548 *Instructions:* Independent Assessor Review	
	• Day, Paul T - Review - Concur - 05/28/2009 1637 *Instructions:* Safety Management Representative Review	
2	Review Initial PER	Inactive
	Review New PER	
	• ^SO(Strasser, David W) - Review - Concur - 03/19/2009 1249 *Instructions:*	
	• ^PER Screening(Brown, Nancy L) - Review - Concur - 03/23/2009 1342 *Instructions:*	
	• ^Mgr Review(Owen, Annette) - Review - Concur - 03/24/2009 0757 *Instructions:*	

ATTACHMENTS

Attachments	1. Draft Letter from Lori Huffman e-mail.doc 2. EM-RP--WRPS-TANKFARM-2009-0004.htm 3. EPA NOV 3-3-09.pdf 4. HNF-EP-0863.pdf 5. Link to PER

COMMENTS

Task# WRPS-PER-2009-0437

Poster	Nielsen, Judith A - 04/30/2009 1636
	WRPS-PER-200900437 - submitted for closure 4/30/09. No further actions required for this closure. J. Nielsen
Poster	Nielsen, Judith A - 04/30/2009 1637
	Completed
	WRPS-PER-2009-0437 - closure document submitted 4/30/09 - no further actions necessary.
Poster	Nielsen, Judith A - 05/04/2009 1430
	Completed
	WRPS-PER-2009-0437 - I am the originator of this PER and am confortable with the closure. I have been working with all interested parties to deteremine the actions. All actions are completed. J. Nielsen
Poster	^Independent Assessment Review (Brown, Robert L) - 05/28/2009 1548
	Concur
	Discussed with Judith Nielsen. The fundamental issue lies with ORP and the EPA. WRPS can take no unilateral actions until direction is provided by ORP. Should additional actions be required they will be based on ORP direction. No further action is required at this point. Concur with closure. Bob Brown

TASK DUE DATE HISTORY

Modified	03/24/2009 0757 - ^PER Coordinator	**New Due Date**	05/03/2009 1630
Modified	03/24/2009 0757 - ^PER Coordinator	**New Due Date**	05/11/2009 1630
Modified	03/19/2009 1138 - ^PER Coordinator	**New Due Date**	03/21/2009 1630

SUB TASK HISTORY

No Subtasks

-- end of report --

Draft Letter from Lori Huffman e-mail dated 4/30/09
****

Here is the letter I have in concurrence on the 616 NOV. I believe it captures our discussion and the commitments from our meeting.

Thanks, Lori

Mr. Jack Boller (OCE-127)
U.S. Environmental Protection Agency
1200 Sixth Avenue, Suite 900
Seattle, Washington 98101

Dear Mr. Boller:

NOTICE OF VIOLATION (NOV) REGARDING UNIVERSAL WASTE PRACTICES

References:
1. EPA letter from E. J. Kowalski to S. J. Olinger, ORP, "**Notice of Violation** United States Department of Energy EPA/Ecology ID Number WA7890008967," dated March 3, 2009.

2. ORP letter from S. J. Olinger to J. Boller, EPA, "Request for Additional Clarification of the Notice of Violation (NOV) U.S. Environmental Protection Agency (EPA)/Washington State Department of Ecology (Ecology) ID Number WA7890008967, Dated March 3, 2009 (OCE-127)," 09-ESQ-094, dated March 24, 2009.

This letter provides proposed corrective actions to Reference 1. The approach to resolve the NOV was developed in a meeting held on April 15, 2009, with the support of both the U.S. Environmental Protection Agency (EPA) and the Washington State Department of Ecology (Ecology). We appreciate your assistance in clarifying your expectations and developing a path forward for the resolution.

To resolve the NOV, a draft revision to the Management Plan for Recycle Materials Administered by Hanford's Centralized Consolidation/Recycling Center (CCRC) (HNF-EP-0863) will be prepared for EPA concurrence by October 12, 2009. The draft revision will address the concerns identified in the NOV regarding labeling and dating of universal waste. In addition, the draft will be accompanied by a proposal for implementing the changes identified in the revision, once agreed to by EPA and Ecology. A working group has been formed comprised of personnel from the U.S. Department of Energy (DOE), Office of River Protection, DOE Richland Operations Office, EPA, Ecology, and Hanford contractors to develop the draft revision to the management plan.

As you are aware, the recycling management plan is implemented on a sitewide basis. As discussed at the meeting on April 15, 2009, Hanford contractors are continuing to comply with

the existing management plan until a revision is in effect and implemented. DOE therefore requests that EPA exercise its enforcement discretion regarding recycling practices until the corrective actions are agreed to and implemented at Hanford.

At the meeting on April 15, 2009, inventory sheets were provided to you from the containers identified in the September 2008 EPA inspection at the Hanford 616 Facility. The inventory sheets identify the dates the materials were delivered to the 616 Facility and added to the containers. In addition, the inventory sheets identify the originating facility and weights for each item added to the container that was being managed for recycle through the Hanford CCRC.

If you have any questions, please contact Lori A. Huffman, Director, ORP's Environmental Compliance Division, (509) 376-0104, or Stephen R. Weil, Director, RL's Environmental Management Division, (509) 372-0879.

Shirley J. Olinger, Manager
Office of River Protection

David A. Brockman, Manager
Richland Operations Office

ESQ:LAH
cc: C. D. McCurley, BNI
R. Ollero, BNI
A. E. Cawrse, CHPRC
R. R. Skinnarland, Ecology
S. A. Szendre, Ecology
E. J. Van Mason, Ecology
C. E. Marple, FH
J. K. Perry, FH
H. T. Tilden, PNL
E. L. Grohs, PNL
J. K. Erickson, PNSO
C. E. Clark, RL
T. W. Ferns, RL
A. C. McKarns, RL
S. R. Weil, RL
K. A. Hadley, WCH
R. T. Hynes, WCH
R. J. Landon, WCH
R. C. Robinson, WCH
P. T. Day, WRPS
J. A. Nielsen, WRPS
J. A. Voogd, WRPS
Administrative Record
BNI Correspondence
Environmental Portal, LMSI
WRPS Correspondence

Thanks, Lori

Lori Huffman, Director
Environmental Compliance Division
Office of River Protection
Office: (509)376-0104
Cell: (509) 619-3177
Fax: (509) 376-3661

mailto:Lori_A_Huffman@orp.doe.gov

EM-RP--WRPS-TANKFARM-2009-0004 NOTIFICATION/FINAL

Occurrence Report
After 2003 Redesign

Tank Farms

(Name of Facility)

Nuclear Waste Operations/Disposal

(Facility Function)

Hanford Site — Washington River Protection Solutions, LLC

(Site) (Contractor)

Name: Nielsen, Judith A
Title: Manager, Site Services & Tank Sampling **Telephone No.:** (509) 373-6732

(Facility Manager/Designee)

Name: WATERS, SHAUN F
Title: OPERATIONS SPECIALIST **Telephone No.:** (509) 373-3457

(Originator/Transmitter)

Name: **Date:**

(Authorized Classifier (AC))

1. Occurrence Report Number: EM-RP--WRPS-TANKFARM-2009-0004

Environmental Protection Agency Issues Notice of Violation for Universal Waste Generation Date Documentation and Labeling Violations

2. Report Type and Date: NOTIFICATION/FINAL

	Date	Time
Notification:	03/19/2009	17:50 (ETZ)
Initial Update:	03/19/2009	17:50 (ETZ)
Latest Update:	03/19/2009	17:50 (ETZ)
Final:	03/19/2009	17:50 (ETZ)

3. Significance Category: 4

4. Division or Project: Washington River Protection Solutions, LLC (WRPS)

5. Secretarial Office: EM - Environmental Management

6. System, Bldg., or Equipment: 616 Building

7. UCNI?: No

8. Plant Area: 600 Area

9. Date and Time Discovered: 03/18/2009 09:30 (PTZ)

10. Date and Time Categorized: 03/18/2009 10:30 (PTZ)

11. DOE HQ OC Notification:

Date	Time	Person Notified	Organization
NA	NA	NA	NA

12. Other Notifications:

Date	Time	Person Notified	Organization
03/18/2009	10:52 (PTZ)	Ciola, R. J.	DOE-ORP
03/18/2009	10:52 (PTZ)	Crary, N. L. Jr.	ONC
03/18/2009	10:52 (PTZ)	Ross, W. E.	WRPS
03/18/2009	10:30 (PTZ)	Owen, P. L.	WRPS

13. Subject or Title of Occurrence:

Environmental Protection Agency Issues Notice of Violation for Universal Waste Generation Date Documentation and Labeling Violations

---

14. Reporting Criteria:

9(2) - Any written notification from an outside regulatory agency that a site/facility is considered to be in noncompliance with a schedule or requirement (e.g., Notice of Violation, Notice of Intent to Sue, Notice of Noncompliance, Warning Letter, Finding of Violation, Finding of Alleged Violation, Administrative Order, or a similar type of notification or enforcement action).

---

15. Description of Occurrence:

On 03/09/2008, the United State Environmental Protection Agency (EPA) issued a Notice of Violation (NOC) to the United States Department of Energy, Office of River Protection (ORP), of violations of the Resource Conservation and Recovery Act as implemented through the Washington Administrative Code (WAC) 173-303 based on inspections of the previous Tank Farm Contractor it conducted September 24 and 25, 2008.

The NOV identified failure to properly label universal waste lamps required by WAC 173-303-573(21)(d), provide the universal waste lamps date of generation documentation required by WAC 173-303-573(22)(c), properly label universal waste battery(ies) required by WAC 173-303-573(21)(a) and provide the universal waste battery(ies) date of generation documentation required by WAC 173-303-573(22)(c).

The Washington River Protection Solutions LLC (WRPS) Base Operations Shift Manager received a copy of

the NOV 03/18/2008. As a result, this event was categorized 9(2) SC4 and reported by WRPS on behalf of ORP.

---

16. Is Subcontractor Involved? No

---

17. Operating Conditions of Facility at Time of Occurrence:

Does not apply.

---

18. Activity Category:

10 - Inspection/Monitoring

---

19. Immediate Actions Taken and Results:

Completed required notifications.

---

20. ISM:

4) Perform Work Within Controls

---

21. Cause Code(s):

---

22. Description of Cause:

---

23. Evaluation (by Facility Manager/Designee):

---

24. Is Further Evaluation Required?: No

---

25. Corrective Actions
Local Tracking System Name: Problem Evaluation Request

---

26. Lessons Learned:

---

27. Similar Occurrence Report Numbers:

---

28. User-defined Field #1:

29. User-defined Field #2:

Problem Evaluation Request WRPS-PER-2009-0437

---

30. HQ Keyword(s):

---

31. HQ Summary:

---

32. DOE Facility Representative Input:

---

33. DOE Program Manager Input:

UNITED STATES ENVIRONMENTAL PROTECTION AGENCY
REGION 10
1200 Sixth Avenue, Suite 900
Seattle, WA 98101-3140

MAR 3 - 2009

OFFICE OF
COMPLIANCE AND ENFORCEMENT

Reply to: OCE-127

CERTIFIED MAIL NUMBER 7008 1830 0004 3067 6241
RETURN RECEIPT REQUESTED

Shirley J. Olinger, Manager
Office of River Protection
United States Department of Energy
P. O. Box 450, MSIN H6-60
Richland, Washington 99352

Re: **NOTICE OF VIOLATION**
United States Department of Energy
EPA/Ecology ID Number WA7 89000 8967

Dear Ms. Olinger:

This Notice of Violation (NOV) is to inform the United States Department of Energy (DOE) of violations of the Resource Conservation and Recovery Act, as amended (RCRA), as implemented through the Washington State federally authorized hazardous waste program found in the Washington Administrative Code (WAC) 173-303. Based on inspections conducted on September 24 & 25, 2008, EPA has identified the following violations:

Violation Number 1 – Failure to Properly Label Universal Waste Lamps

For lamps that are managed as universal waste the regulations at WAC 173-303-573(21)(d) require that each individual lamp or a container in which the lamps are accumulated, must be labeled or clearly marked with any one of the following phrases: "Universal Waste Lamp(s)," or "Waste Lamp(s)," or "Used Lamp(s)."

At the time of the inspection, EPA inspectors observed at the 616 building several boxes containing used lamps. According to facility personnel, these lamps were awaiting shipment to Hanford's central recycling center where they would be accumulated and sent offsite as universal waste lamps. The boxes were labeled with the words "held for recycling" and did not have any of the labels required under the universal waste rules.

DOE failed to provide labeling as required by WAC 173-303-573(21)(d).

RECEIVED
MAR 09 2009
DOE-ORP/ORPCC

Violation Number 2 – Failure to Properly Date Universal Waste Lamps

For lamps that are managed as universal waste the regulations at WAC 173-303-573(22)(c) require that a universal waste handler must be able to demonstrate the length of time that each universal waste has been accumulated from the day it becomes a waste.

At the time of the inspection, EPA inspectors observed at the 616 building several boxes containing used lamps. According to facility personnel, these lamps were awaiting shipment to Hanford's central recycling center where they would be accumulated and sent offsite as universal waste lamps. There were no dates on any of the boxes and there was no documentation provided that established the date the oldest lamp became a waste.

DOE failed to provide the date of generation documentation as required by WAC 173-303-573(22)(c).

Violation Number 3 – Failure to Properly Label Universal Waste Batteries

For batteries that are managed as universal waste, the regulations at WAC 173-303-573(21)(a) require that each individual battery or a container in which the batteries are accumulated, must be labeled or clearly marked with any one of the following phrases: "Universal Waste Battery(ies)," or "Waste Battery(ies)," or "Used Battery(ies)."

At the time of the inspection, EPA inspectors observed at the 616 building several containers of used batteries. According to facility personnel, these batteries were awaiting shipment to Hanford's central recycling center where they would be accumulated and sent offsite as universal waste batteries. The containers were labeled with the words "held for recycling" and did not have any of the labels required under the universal waste rules.

Since used batteries are clearly waste and are destined to be managed as universal waste they are required to have the proper universal waste labeling at the time they are removed from service. DOE failed to provide labeling as required by WAC 173-303-573(21)(a).

Violation Number 4 – Failure to Properly Date Universal Waste Batteries

For batteries that are managed as universal waste the regulations at WAC 173-303-573(22)(c) require that a universal waste handler must be able to demonstrate the length of time that each universal waste has been accumulated from the day it becomes a waste.

At the time of the inspection, EPA inspectors observed at the 616 building several containers of used batteries. According to facility personnel, these batteries were awaiting shipment to Hanford's central recycling center where they would be accumulated and sent offsite as universal waste batteries. There were no dates on any of the containers and there was no documentation provided that established the date the oldest battery became a waste.

DOE failed to provide the required date of generation documentation as required by WAC 173-303-573(22)(c).

Required Action

The above violations may subject DOE to enforcement action under Section 3008 of RCRA, 42 U.S.C. 6928, including assessment of civil penalties. Within fifteen (15) days of receipt of this NOV, EPA requests that DOE submit a written response that identifies all actions that DOE has taken or will take to correct the violation and the time frame for completing such action.

Please send all material submitted in response to this NOV to:

Jack Boller (OCE-127)
U. S. Environmental Protection Agency
1200 Sixth Avenue, Suite 900
Seattle, Washington 98101

EPA Reservation of Rights

Notwithstanding this NOV or DOE's response, EPA reserves the right to take any action pursuant to RCRA or any other applicable legal authority, including without limitation, the right to seek injunctive relief, implementation or response actions or corrective measures, cost recovery, monetary penalties, and punitive damages. DOE's response to this NOV does not constitute compliance with RCRA.

Nothing in this NOV or DOE's response shall affect DOE's duties, obligations, or responsibilities with respect to the facility under local, state, or federal law or regulation.

Thank you for your prompt attention to this important matter. If you have any questions regarding this matter, please contact Jack Boller of my staff at (206) 553-2953.

Sincerely,

Edward J. Kowalski, Director
Office of Compliance and Enforcement

cc: Jane Hedges, Ecology

RELEASE INSTRUCTIONS (RI) NO RETURN RECEIPT	Document No.: HNF-EP-0863 Page 1 of 1
To:	Title: MANAGEMENT PLAN FOR RECYCLABLE MATERIALS ADMINISTERED BY HANFORD'S CENTRALIZED CONSOLIDATION/RECYCLING CENTER Release No.: 2 Date Prepared: 10/15/2002
When document is no longer needed, refer to the Instruction on the Document Management Controlled Coversheet in front of your document.	If you have any questions about this release contact: BJ DIXON Phone: 376-7053 For Missing Releases call 376-6831

CONTROLLED COPY INSTRUCTIONS

1. Remove and/or insert indicated sections into document as shown below.
2. Update the release record at the front of the document.

Section No. and Title(s)	Remove			Insert		
	Pages	Rev	Date	Pages	Rev	Date
REPLACED IN ITS ENTIRETY	ALL	1	04/12/2001	ALL	2	10/09/2002

IMPLEMENTATION NOTICE

Date Received for Clearance Process (MM/YY/DD) 10/9/02

INFORMATION CLEARANCE FORM

A. Information Category

- ☐ Abstract
- ☐ Summary
- ☐ Visual Aid
- ☐ Full Paper
- ☐ Journal Article
- ☐ Internet
- ☐ Software
- ☐ Report
- ☒ Other Management Plan

B. Document Number HNF-EP-0863, Revision 2

C. Title
Management Plan for Recyclable Materials Administered by Hanford's Centralized Consolidation/Recycling Center

D. Internet Address

E. Required Information

1. Is document potentially Classified? ☒ No ☐ Yes (MANDATORY)
   See below for signature
   Manager's Signature Required
   If Yes _____ ☐ No ☐ Yes Classified
   ADC Signature Required
2. References in the Information are Applied Technology ☑ No ☐ Yes
   Export Controlled Information ☑ No ☐ Yes

3. Does Information Contain the Following: (MANDATORY)

a. New or Novel (Patentable) Subject Matter? ☒ No ☐ Yes
   If "Yes", Disclosure No.: _____
b. Information Received in Confidence, Such as Proprietary and/or Inventions?
   ☒ No ☐ Yes If "Yes", Affix Appropriate Legends/Notices.
c. Copyrights? ☒ No ☐ Yes If "Yes", Attach Permission.
d. Trademarks? ☒ No ☐ Yes If "Yes", Identify in Document.

4. Is Information requiring submission to OSTI? ☒ No ☐ Yes
5. Release Level? ☒ Public ☐ Limited HPCM0211

F. Complete for a Journal Article

1. Title of Journal

G. Complete for a Presentation

1. Title for Conference or Meeting _____
2. Group Sponsoring _____
3. Date of Conference _____
4. City/State _____
5. Will Information be Published in Proceedings? ☐ No ☐ Yes
6. Will Material be Handed Out? ☐ No ☐ Yes

H. Author/Requestor
B. J. Dixon (Print and Sign)

Responsible Manager
B. J. Dixon (Print and Sign)

I. Reviewers

	Yes	Print	Signature	Public Y/N (If N, complete J)
General Counsel	☐			Y / N
Office of External Affairs	☐			Y / N
DOE-RL	☐			Y / N
Other LMIT	☒	C. Willingham	Chris Willingham	(Y) / N
Other	☐			Y / N

J. If Information Includes Sensitive Information and is not to be released to the Public indicate category below.

- ☐ Applied Technology
- ☐ Personal/Private
- ☐ Proprietary
- ☐ Business-Sensitive
- ☐ Predecisional
- ☐ UCNI
- ☐ Protected CRADA
- ☐ Export Controlled
- ☐ Procurement-Sensitive
- ☐ Patentable
- ☐ Other (Specify) _____

Information Clearance Approval

APPROVED FOR RELEASE — OFFICIAL DOCUMENT — CW — Date 10/9/02

K. If Additional Comments, Please Attach Separate Sheet

A-6001-401 (12/00)

HNF-EP-0863
Revision 2
Copy No. __

Management Plan for Recyclable Materials Administered by Hanford's Centralized Consolidation/Recycling Center

Prepared for the U.S. Department of Energy
Assistant Secretary for Environmental Management
Project Hanford Management Contractor for the
U.S. Department of Energy under Contract DE-AC06-96RL13200

Fluor Hanford
P.O. Box 1000
Richland, Washington

Approved for public release; further dissemination unlimited

HNF-EP-0863
Revision 2

Copy No. __

Management Plan for Recyclable Materials Administered by Hanford's Centralized Consolidation/Recycling Center

B.J. Dixon
Fluor Hanford, Inc.

Date Published
October 2002

Prepared for the U.S. Department of Energy
Assistant Secretary for Environmental Management

Project Hanford Management Contractor for the
U.S. Department of Energy under Contract DE-AC06-96RL13200

Fluor Hanford
P.O. Box 1000
Richland, Washington

Chris Willingham 10/9/02
Release Approval Date

Approved for public release; further dissemination unlimited

LEGAL DISCLAIMER

This report was prepared as an account of work sponsored by an agency of the United States Government. Neither the United States Government nor any agency thereof, nor any of their employees, nor any of their contractors, subcontractors or their employees, makes any warranty, express or implied, or assumes any legal liability or responsibility for the accuracy, completeness, or any third party's use or the results of such use of any information, apparatus, product, or process disclosed, or represents that its use would not infringe privately owned rights. Reference herein to any specific commercial product, process, or service by trade name, trademark, manufacturer, or otherwise, does not necessarily constitute or imply its endorsement, recommendation, or favoring by the United States Government or any agency thereof or its contractors or subcontractors. The views and opinions of authors expressed herein do not necessarily state or reflect those of the United States Government or any agency thereof.

This report has been reproduced from the best available copy.

Printed in the United States of America

Table of Contents

1. Introduction 1

2. Scope 2

3. Standards for Management of Recyclable Materials at Facilities Prior to Consolidation at CCRC 3
   - 3.1. Recyclable Materials Accepted at CCRC 3
   - 3.2. Standards for Accumulation 3
   - 3.3. Acceptance Criteria for Receipt at the CCRC 4
   - 3.4. Transportation Standards 4

4. Standards for Management of Recyclable Materials at CCRC 4
   - 4.1. Aerosol Products 4
   - 4.2. Mercury and Mercury-Containing Equipment 5
   - 4.3. Lamps and Batteries 5
   - 4.4. Crushed Fluorescent Lamps 5
   - 4.5. Lead-acid Batteries 5
   - 4.6. Electrical Ballasts or Capacitors 5

5. Standards for Management of Other Recyclable Materials 6
   - 5.1. Shop Towels 6
   - 5.2. Used Oil 6
   - 5.3. Spent Antifreeze 7

Appendix A

MANAGEMENT PLAN FOR RECYCLABLE MATERIALS ADMINISTERED BY HANFORD'S CENTRALIZED CONSOLIDATION/ RECYCLING CENTER

1. INTRODUCTION

In January 1995, a proposal for alternative management of aerosol products, batteries, and light ballasts with dioctyl phthalate (DOP) capacitors was transmitted to the State of Washington Department of Ecology (Ecology) for approval. The proposal's intent was to encourage recycling by consolidating these materials at a central location in order to make recycling economically feasible. The central location under this plan was called the Centralized Consolidation/Recycling Center (CCRC).

In order for the concept to satisfy regulatory requirements, the CCRC was considered the point of generation where the waste initially accumulated. Under this approach, recyclable material would not be considered to be solid waste until after it was received at the CCRC and the determination had been made concerning the material's disposition. Since this interpretation differed from the current site practice, Ecology was asked to provide concurrence for the proposal. The proposal described how recyclable material would be managed at facilities and at the CCRC to ensure the protection of human health and the environment. Ecology's concurrence with the proposal was received in April 1995. The letter providing the concurrence noted that the proposal was, "in the spirit of resource conservation and recovery," and encouraged an expanding effort for waste reduction and recycling of commonly generated "nuisance" hazardous waste at the Hanford Site. The letter further noted that regulatory pathways for recycling of commonly generated hazardous wastes could be determined.

The CCRC was established in the 400 Area of the Hanford Site shortly after obtaining Ecology's concurrence. After demonstrating that the three initial waste streams could be successfully recycled, Ecology was asked to approve additional waste streams. Concurrence to add sodium vapor, mercury vapor, and incandescent lamps was received in October 1996. Concurrence to add mercury and mercury-containing equipment was obtained in January 1998. Several of these recyclable materials are included in the provisions for "universal waste" that were adopted subsequent to receiving Ecology concurrence for the CCRC approach. This Management Plan updates the original proposal by incorporating universal waste and other regulatory standards and by including information about the approach for managing additional recyclable materials. Upon Ecology concurrence of this Management Plan, it supersedes the following documents:

- WHC-EP-0863, *Centralized Consolidation/Recycling Center.* This document was sent to Ecology in January 1995. It contained the initial proposal for management of aerosol products, batteries, and DOP ballasts as recyclable materials. The proposal was implemented in May 1995 after receiving Ecology concurrence.

- Letter, David L. Lundstrom, State of Washington Department of Ecology (Ecology), to James Rasmussen, RL, et al., "Comments to January 1995, Proposed Centralized Consolidation/Recycling Center on the Hanford Site," dated April 18, 1995. This letter conveys Ecology's concurrence with the United States Department of Energy, Richland Operations Office (RL) January 1995 proposal.

- Letter, Michael Wilson, Ecology, to James E. Rasmussen, RL, "Additional Waste Streams Proposed for Management at the Consolidation Center," dated October 21, 1996. This letter confirmed Ecology's concurrence with the addition of mercury, sodium, and incandescent light bulbs for management at the CCRC.

- Letter, Michael A. Wilson, Ecology, to James E. Rasmussen, RL, "Re: 97-EAP-779," dated January 30, 1998. This letter confirmed Ecology's concurrence for the addition of mercury and mercury containing equipment for management at the CCRC.

This Management Plan represents one aspect of the overall Hanford Pollution Prevention and Waste Minimization Program. Other aspects of the overall program include non-hazardous material recycling, project-specific activities, and the Excess Chemical Program. Additional recyclable materials will be evaluated for inclusion to this plan based on evidence of the material's recyclability (a market for the material and a recycler with demonstrated ability to recycle the material). For management practices requiring a regulatory determination, revisions to this plan will be submitted to Ecology for concurrence. It should be noted that other materials may be managed by the CCRC provided that such activity is in accordance with applicable regulatory requirements.

At a site as large as Hanford, some adaptation is necessary to encourage maximum participation in recycling programs. As with earlier proposals, Ecology concurrence is required for the interpretation that the recyclable materials addressed in this plan are not solid wastes until the decision to discard them is made at the CCRC. This regulatory interpretation is valid only as long as the materials are managed in accordance with the protocols established in this plan. (Note: this provision only applies to recyclable materials that are aggregated at CCRC prior to shipment to an offsite recycler.)

2. SCOPE

The following recyclable materials are within the scope of this Management Plan:

- Aerosol Products.
- Mercury and Mercury Containing Equipment.
- Universal Waste Lamps and Batteries.
- Crushed Fluorescent Lamps.
- Lead-acid Batteries.
- Electric Ballasts or Capacitors.
- Used Shop Towels.
- Used Oil.
- Spent Antifreeze.

3. STANDARDS FOR MANAGEMENT OF RECYCLABLE MATERIALS AT FACILITIES PRIOR TO CONSOLIDATION AT CCRC

3.1 Recyclable materials accepted at the CCRC include the following:

- Aerosol products, with the exception of jumbo cans (greater than 3 inches in diameter) and those containing expanding foam sealant. Aerosol product cans must have caps on them when shipped to the CCRC.
- Mercury and mercury-containing equipment with readily recoverable mercury. (Facility personnel should consult with CCRC personnel to confirm whether equipment contains readily recoverable mercury.)
- Universal waste lamps and batteries
- Intact or unintentionally broken universal waste lamps as defined in WAC 173-303-040, including, but not limited to, neon, fluorescent, incandescent, mercury (high and low-pressure), and sodium (high and low-pressure) lamps. Lamps must be segregated and packaged per Department of Transportation (DOT) rules by lamp type.
- Batteries, including but not limited to alkaline, carbon zinc/zinc-chloride, nickel cadmium, mercury/mercury oxide, lithium, magnesium, zinc silver, and Polaroid polapulse. Prior to shipment to CCRC, batteries must be segregated and packaged per DOT rules by battery type. Glass-cased or leaking or cracked batteries containing liquid electrolytic solution, oil filled batteries, missile, aluminum, or absolyte batteries will not be accepted at the CCRC.
- Crushed fluorescent lamps.
- Lead-acid batteries. Glass-cased or leaking or cracked batteries containing liquid electrolytic solution and oil filled batteries will not be accepted at CCRC.
- Electrical ballasts or capacitors that do not contain PCBs or designate as a dangerous waste. Electrical ballasts or capacitors that contain batteries shall be segregated and packaged in separate containers from other electrical ballasts or capacitors.

Facilities that generate these recyclable materials must manage them in accordance with the following standards to qualify for coverage under this plan. The standards identify practices that will help ensure that these materials are managed in a safe and environmentally protective manner.

3.2 Standards for Accumulation

- Personnel who set up, maintain, or dismantle accumulation areas shall receive a briefing on the accumulation standards for generators for each type of recyclable material managed under their purview.
- Accumulation containers shall be marked with "Recycle Accumulation Area for (insert the name of the material, e.g., Aerosol Products, Fluorescent Lamps, Mercury-Containing Equipment)." The mark shall be obtained from or approved by CCRC personnel.
- Recyclable materials shall be accumulated in a manner and location that maintains container integrity.
- Flammables shall be stored in accordance with standards established by Hanford Site contractor procedures.
- Recyclable materials shall be accumulated in a manner that prevents releases or spills.
- Recyclable materials shall be accumulated in a manner that avoids reaction of incompatible materials.
- Only non-radioactive recyclable materials shall be accumulated under this plan.

(Note: Materials containing metal that will be recycled will be subject to Hanford Site requirements for unrestricted release of metal for recycling.)

- When accumulating mercury-containing equipment, measures shall be taken, as practicable, to minimize breakage that would result in the release of mercury.
- When accumulating batteries, the battery contacts shall be protected with tape or packaged to avoid being short-circuited. It is recommended that batteries be accumulated by battery type. All liquid-filled batteries shall have caps, plugs, or covers over the opening to prevent spills or releases.
- When accumulating lamps, each lamp type should be collected separately to avoid repackaging. Measures should be taken, as practicable, to minimize breakage of intact lamps.

3.3 Acceptance Criteria for Receipt at the CCRC

- A completed CCRC Form for the recyclable material being accumulated shall accompany the shipment.
- A completed Radiological Release Certification Form shall accompany the shipment.
- Applicable standards identified in 3.1 and 3.2 must have been met.

3.4 Transportation Standards

- Recyclable materials that meet the definition of a DOT Hazardous Material shall be shipped to the CCRC in compliance with DOT's Hazardous Materials Regulations (49 CFR 171-180).

4. STANDARDS FOR MANAGEMENT OF RECYCLABLE MATERIAL AT CCRC

Upon receipt at CCRC, the recyclable material is evaluated under WAC 173-303-016 and WAC 173-303-017 to determine if it is a solid waste and to determine the disposition pathway for the material. Based on the disposition strategy for the material, it is managed in accordance with applicable regulatory requirements. The following information is provided as an overview of the process for each type of material received at the CCRC.

4.1 Aerosol Products

- Aerosol product cans are sorted into usable and non-usable categories.
- Usable aerosol products are inventoried into the CCRC hazardous material inventory database and stored according to compatibility group.
- Aerosol products that have not been re-deployed to other Hanford Site users within one year of being placed in inventory will be excessed, punctured, or otherwise dispositioned on an annual basis.
- Non-usable aerosol products are punctured and the contents are drained into satellite accumulation area drums containing other compatible materials. These waste liquids are managed according to the requirements of WAC-173-303 with final disposition at a permitted Treatment, Storage, and Disposal (TSD) Facility.
- Empty aerosol product cans will be recycled as scrap metal if practical, according to requirements of WAC 173-303-120(2).

4.2 Mercury and Mercury-Containing Equipment

- Upon receipt at CCRC, mercury and mercury-containing equipment is placed in satellite accumulation containers and is subsequently managed in accordance with WAC 173-303-200 with the CCRC identified as the point of generation.
- Final disposition involves recycling at a permitted TSD Facility where mercury is recovered for re-use.

4.3 Universal Waste Lamps (other than crushed) and Batteries (other than lead-acid)

- Lamps and batteries are managed as universal waste upon receipt at the CCRC in accordance with the large quantity handler provisions contained in WAC 173-303-573.
- The accumulation start date will be marked on the container and will be assigned based on the date the shipment of universal waste is received at the CCRC.
- Universal waste will be shipped from the CCRC within one year of the accumulation start date unless a longer period is necessary to facilitate proper recovery, treatment, or disposal per WAC 173-303-573(22).
- Universal wastes are shipped off-site to a destination facility in accordance with WAC 173-303-573(25).

4.4 Crushed Fluorescent Lamps

- Crushed fluorescent lamps will be managed as non-dangerous or dangerous waste at the CCRC.
- The CCRC will maintain documentation based on process knowledge and/or analytical data when the crushed lamps do not designate as dangerous waste.
- Crushed fluorescent lamps will be sent off-site for recycling.

4.5 Lead-acid Batteries

- Lead-acid batteries consolidated at the CCRC will be managed in accordance with WAC 173-303-520, "Special Requirements for Reclaiming Spent Lead-Acid Battery Waste."
- All lead-acid batteries will be shipped to a battery reclaiming facility when sufficient quantity has aggregated for a cost effective shipment.
- A one time Land Disposal Restriction (LDR) notification is made to the vendor for CCRC managed lead acid batteries.

4.6 Electrical Ballasts or Capacitors

- Electrical ballasts or capacitors will be managed as non-dangerous waste at the CCRC.
- Electrical ballasts or capacitors are accumulated at the CCRC until it is cost-effective to ship them off-site to a recycler.
- The CCRC will maintain documentation based on process and/or analytical data that the electrical ballasts or capacitors do not designate as dangerous waste. (Ballasts or capacitors designated as dangerous waste will not be managed at the CCRC.)
- Electrical ballasts or capacitors that contain batteries will be managed in accordance with Section 4.3 of this plan.

5. STANDARDS FOR MANAGEMENT OF OTHER RECYCLABLE MATERIALS

5.1 Used Shop Towels

In July 1992, the Washington State Department of Ecology issued a Focus sheet with guidance to generators of shop towels. The management of used shop towels will be conducted in accordance with the best management practices identified within this Focus sheet. However, there is one exception to these best management practices regarding the marking of containers as "contaminated shop towels." Hanford workers often associate the term "contaminated" with radioactive contamination. To avoid confusion, the term "used shop towels" will be used at Hanford. The following standards apply for management of used shop towels:

- Recycle containers shall be marked with the words "Recycle Accumulation Area for Used Shop Towels."
- Containers for used shop towels contaminated with hazardous substances must be compatible with the substances present and must be closed except when adding or removing shop towels.
- Accumulation/storage areas for used shop towels that are contaminated with flammable materials must be managed according to Hanford Site contractor procedures. "No Smoking" signs shall be legible and placed at all accumulation areas.
- Used shop towels may NOT be accumulated for longer than 180 days before being recycled. (Currently, the vendor providing laundering services collects used shop towels on a monthly basis.)
- The amount of hazardous substance on used shop towels should be minimized. All free liquids must be removed before placing used shop towels into the accumulation container. Liquids must not be poured into containers of used shop towels. Free liquids must be reused or evaluated for designation and management as dangerous waste.
- No radioactive or PCB contaminated shop towels shall be returned to the commercial laundry service provider.
- The CCRC will manage the Used Shop Towel program for the Hanford Site. This includes establishing contracts or payment methods, reconciling inventories, maintaining a list of participating facilities, and assuring that the off-site recycling facility is meeting local sewer discharge limits and other applicable environmental regulations.

5.2 Used Oil

Used oil recycling services will be available through the CCRC for Hanford Site projects and contractors. The CCRC will manage this contract for generators of "on-specification" or "off-specification" used oil destined for recycling provided that the used oil is not required to be managed as a dangerous waste. It is Hanford's intent that used oil be managed in accordance with all applicable provisions of WAC 173-303-515. The following sections are provided to assist generators and are not intended to be a comprehensive list of regulatory requirements:

- Recycle containers and above ground tanks shall be labeled or marked with the words "Used Oil."
- Storage of used oil in underground storage tanks will be in accordance with WAC 173-360 as applicable.
- Storage of used oil in locations and quantities subject 40 CFR Part 112 shall be in accordance with Spill Prevention, Control and Countermeasures Plan requirements.
- Containers and above ground tanks used to store used oil at generator facilities will be in good condition with no visible leaks.

- Response to a release of used oil to the environment will be in accordance with 40 CFR 279.22.
- Containers will be closed except when adding or removing used oil. Containers and tanks will not be opened, handled, managed, or stored in a manner that may cause the container or tank to leak or rupture.
- The pick up of used oil by an authorized used oil transporter will be performed as needed. The CCRC will coordinate such shipments.
- A completed Radiological Release Certification Form (e.g., HNF-EP-0063 or equivalent) shall accompany each shipment.
- A used oil recycling contract will be managed by the CCRC for Hanford Site projects. This includes establishing contracts or payment methods, reconciling inventories, maintaining a list of participating facilities, and assuring that the off-site recycling facility is meeting all applicable environmental regulations.
- The CCRC will maintain disposal records for three years.
- Used oil will be recycled by an authorized used oil processor or re-refiner.

5.3 Spent Antifreeze

A spent antifreeze recycling contract will be managed by the CCRC for Hanford Site projects and contractors. It is Hanford's intent that spent antifreeze be managed in accordance with all applicable provisions of WAC 173-303-522. The following sections are provided to assist generators and are not intended to be a comprehensive list of regulatory requirements:

- Recycle containers shall be labeled "Spent Antifreeze."
- During accumulation, spent antifreeze will be stored in a manner to prevent releases to the environment. This includes, but is not limited to, storing wastes in compatible containers, on impermeable surfaces, or in secondary containment structures.
- The pick up of spent antifreeze will be performed as needed. The CCRC will coordinate such shipments.
- A completed Radiological Release Certification Form (e.g., HNF-EP-0063 or equivalent) shall accompany each shipment.
- A spent antifreeze recycling contract will be managed by the CCRC for Hanford Site projects. This includes establishing contracts or payment methods, reconciling inventories, maintaining a list of participating facilities, and assuring that the off-site recycling facility is meeting all applicable environmental regulations.
- Proof of reclamation/recycling will be maintained by the CCRC for at least five years from the date of reclamation/recycling.
- Spent antifreeze will be sent to an off-site reclamation/recycling facility.

Appendix A

STATE OF WASHINGTON
DEPARTMENT OF ECOLOGY
1315 W. 4th Avenue • Kennewick, Washington 99336-6018 • (509) 735-7581

September 20, 2002

Mr. Joel Hebdon
Regulatory Compliance and Analysis Division
United States Department of Energy
P.O. Box 550, MSIN A5-15
Richland, Washington 99336

Dear Mr. Hebdon:

Re: Page Revision to HNF-EP-0863, the Management Plan for Recyclable Materials Administered by the Hanford Centralized Consolidation/Recycling Center (CCRC)

The Washington State Department of Ecology (Ecology) has received and reviewed the United States Department of Energy-Richland Operations Office (USDOE) request for a revision of the "Management Plan for Recyclable Materials Administrated by Hanford's Centralized Consolidation/Recycling Center" (Management Plan) regarding crushed fluorescents tubes. Ecology concurs with the change proposed. Please proceed with Revision 2 of the Management Plan (HNF-EP-0863).

In regards to Ecology's "Interim Enforcement Policy, Conditional Exclusion for Cathode Ray Tubes and Related Electronic Wastes", Hanford is subject to follow requirements by generators; requirements for generators, including accumulating wastes for no more than one hundred eighty (180) days on site.

Ecology encourages USDOE and Hanford Site contractors to continue reducing environmental risks and applauds your on-going pollution prevention practices and policies.

If you have any questions, please contact Michelle Anderson-Moore at (509) 736-5714.

Sincerely,

Michael A. Wilson, Manager
Nuclear Waste Program

cc: D.K. Duvon, BHI
J.T. Quigley, CHG
B.J. Dixon, FHI ✓
R.H. Gurske, FHI
A.G. Misko, FHI
E. Grohs, PNNL
K. Niles, OOE
Administrative Record

RECEIVED
SEP 26 2002

One of the initiatives discussed in meetings with Ecology staff was to procure lamps with low

STATE OF WASHINGTON
DEPARTMENT OF ECOLOGY
P.O. Box 47600 • Olympia, Washington 98504-7600
(360) 407-6000 • TDD Only (Hearing Impaired) (360) 407-6006

April 2, 2001

Mr. Joel Hebdon, Director
Regulatory Compliance and Analysis
United States Department of Energy
Richland Operations Office
P.O. Box 550, MSIN: A5-58
Richland, Washington 99352

Re: Management Plan for Recyclable Material Administered by the Hanford Centralized Consolidation/Recycling Center (CCRC)

Dear Mr. Hebdon:

The Washington State Department of Ecology received a letter from Mr. Steven H. Wisness on January 16, 2001, requesting concurrence of the referenced Management Plan for Recyclable Material Administered by the Hanford CCRC. It is Ecology's understanding that the United States Department of Energy (USDOE) intends to continue the successful practices for recycling the waste streams as described in the management plan. These activities have been conducted since 1995 as a pilot program with the concurrence of Ecology.

As with the pilot program, Ecology continues to be committed to support the recycling efforts within this program. We find that, based on the demonstrated successful management practices since 1995, there is continued basis for application of enforcement discretion and/or specific regulatory interpretations, which support the activities.

The referenced letter specifically describes the need to delay identification of specific recyclable materials as solid wastes prior to determining their waste status at the CCRC. Contingent on materials being managed within the requirements of the management plan, Ecology continues to support this interpretation. Ecology must stress that this interpretation is applicable only to the waste streams described in the agreed to management plan.

An additional requirement discussed during development of the management plan was the need to ensure adequate training of individuals who generate or manage the recyclable wastes, specifically those which would be classified as "Universal Wastes" described in Washington Administrative Code (WAC) 173-303-573. As you know, Hanford employees are trained in many hazardous waste management requirements. In addition to the requirements of the

RECEIVED
APR 0 6 2001
DOE RL/CCC

Hanford Site-Wide Permit and Unit Specific Training Plans, management of Universal Waste adds new training requirements. Ecology discussed these training requirements with USDOE with the conclusion that existing training programs, along with briefings for familiarization with the elements of the management plan, would exceed, or be equivalent to, the Universal Waste training requirements in WAC 173-303-573 (12). Therefore, no specific additional training programs would be necessary in the management plan. This is called to your attention primarily to ensure that USDOE and its contractors understand that maintaining this equivalency is necessary for maintaining Ecology's concurrence with the management plan.

It is Ecology's understanding that upon receipt of this concurrence letter, USDOE will finalize the management plan and it will replace the existing pilot project management documents for the described waste streams. Subsequent updates to the document will be administered using USDOE's document control processes and will require Ecology concurrence. Ecology believes this will provide an adequate process for future maintenance of the management plan.

If you have any questions regarding this letter, please contact Steve Moore in Ecology's Kennewick Office at (509) 736-3023.

Sincerely,

Michael A. Wilson
Program Manager
Nuclear Waste Program

MW:SM

cc: Anna Beard, USDOE-RL
Brian J. Dixon, Dyncorp
Candice Marple, Dyncorp
Roger Bowman, FH
Mary Lou Blazek, OOE
Administrative Record: CCRC

Distribution List – To:

M. Anderson-Moore, B5-18 (H)
B. P. Atencio, P7-68 (H)
L. E. Borneman, T6-16 (H)
H. C. Boynton, T4-52 (H)
R. C. Bowman, A1-14 (H)
B. J. Dixon, R3-32 (H)
W. T. Dixon, R1-51 (H)
D. K. Duvon, H0-02 (H)
E. L. Grohs, K3-75 (H)
R. H. Gurske, H8-73 (H)
K. A. Hadley, T5-57 (H)
O. M. Holgado, A2-15 (H)
K. P. Hooper, R3-32 (H)
J. E. Hyatt, N1-24 (H)
D. B. Jensen (RCRA File), G1-27 (H)
R. A. Kaldor, H8-67 (H)
C. A. Kooiker, N2-57 (H)
R. J. Landon, H0-02 (H)
G. J. LeBarron, S4-49 (H)
C. E. Marple, N1-21 (H)
P. W. Martin, T3-04 (H)
S. M. McInturff, H1-51 (H)
P. C. Miller, R1-51 (H)
A. G. Miskho, N1-26 (H)
T. W. Moon, P8-45 (H)
S. Mortensen, T6-20 (H)
G. M. Neath, H6-60 (H)
J. Nielsen, T3-05 (H)
J. K. Perry, L1-04 (H)
D. E. Rasmussen, L1-04 (H)
Y. M. Shehadeh, R1-51 (H)
G. T. Thornton, P7-70 (H)
H. T. Tilden, K3-75 (H)
D. J. Watson, X3-79 (H)
G. O. Willingham, R1-51 (H)

Distribution List – cc:

M. D. Aichele, T4-04
S. E. Albin, B4-41
D. J. Alexander, T5-51
B. G. Andersen, _8-45
L. S. Angerman, G5-52
J. M. Atwood, H0-18
W. J. Bachmann, P7-57
D. F. Baker, T5-56
D. B. Beagles, T6-03
M. W. Benecke, L0-33
R. H. Bidstrup, T2-05
J. O. Bilskis, S8-03
J. M. Bishop, L0-33
G. O. Boness, G1-10
R. W. Brown, R3-32
M. E. Burnside, H1-11
F. J. Carvo, L6-55
R. L. Clawson, H1-11
S. T. Cloninger, T5-56
J. Coenenberg, A2-34
L. L. Cole, T3-05
N. R. Dahl, N2-57
R. A. Del Mar, R3-32
L. M. Dittner, H0-02
M. E. Eby, N2-57
J. J. Ehlis, X9-10
M. D. Ellefson, T3-05
D. P. Ellingson, T1-27
W. J. Evans, S8-03
A. E. Fisher, R3-32
D. L. Flyckt, S6-71
B. G. Gana, L6-06
K. George, R1-51
D. A. Gilles, S7-02
P. Gonzalez, R3-32
T. A. Grabner, T7-05
R. E. Gregory, T5-46
M. G. Hall, K3-59
T. L. Hanford, S5-11
E. M. Harding, X9-11
J. W. Hasson, R4-02
I. Henderson, T4-20
A. E. Hill, N2-57
J. R. Hillard, T7-05
N. O. Hinojosa, X3-74
A. C. Hobbs, T6-50
J. G. Hogan, H1-11
P. K. Huff, S3-25
K. B. Hulse, H1-11
R. T. Hynes, T3-04
S. L. Icayan, G1-14
R. M. Jochen, X3-74
J. A. Johnston, S7-03
R. A. Jones, P7-78
M. E. Kenfield, H0-18
J. M. Kisielnicki, L1-02
D. L. Klages, L5-66
E. L. Lamm, N1-91
C. M. Lee, T3-04
K. M. Leonard, T4-05
L. S. Lauren, P7-28
M. L. Martin, P8-34
S. Martinez, L6-54
J. E. Maxwell, G1-14
D. L. McCall, H1-11
J. P. McGrogan, R1-51
J. L. Mejia, R3-56
D. S. Mengelos, T3-05
A. Montelongo, L1-04
S. E. Myers, P8-10
P. K. Newman, X9-10
R. R. Nielson, X9-08
R. P. Ollero, H0-18
P. A. Pechin, X3-78
M. G. Peloquin, T6-05
C. D. Porter, S3-28
J. H. Portsmouth, H1-11
R. J. Praznik, S7-03
J. T. Quigley, R1-51
T. K. Ravencraft, S4-46
J. J. Rohner, S7-07
M. A. Sams, T3-05
M. C. Schilperoot, H1-11
B. W. Scott, L6-37
S. K. Shirley, T6-50
K. R. Smith, L1-07
W. N. Smith, T4-04
D. M. Southwick, L1-08
R. B. Spivey, S5-50
D. A. St. John, H9-03
R. A. Steffler, H1-11
D. E. Stocker, X5-50
M. L. Sumsion, S5-03
S. C. Sutton, S5-03
S. B. Swoboda, H1-11
W. S. Thompson, H9-03
L. D. Upton, T5-56
C. E. Upchurch, S7-75
M. W. Vermillion, R4-02
J. M. Waddoups, B4-54
S. C. Williams, R4-02
R. Weissenfels, S6-51
N. L. Weston, T3-05
N. P. Norman, T4-52
K. J. Young, H1-11
J. H. Zimmerman, X3-74
Central Files, B1-07

Save

Problem Evaluation Request (PER)

WRPS-PER-2009-0453
Closed 03/26/2009 10:00

PER No	Date of Discovery	Time of Discovery (24:00)	Project
WRPS-PER-2009-0453	03/23/2009	12:00	RadCon-RC

Location

2704HV

How Was Problem Discovered

Maintenance Activity

Description of Concern or Problem

RC RadCon was notified by Base Operations Maintenance that air sampler serial number 8995 was found out of tolerance (OOT) during calibration in accordance with 6-RM-719. The tolerance requirement is +/- 10% of the Conventionally True Value (CTV). The as-found M&TE reading (CTV) was outside the allowable tolerance at indicated flow rates of 1, 2, 3, and 4 CFM. Calibration was performed and documented in accordance with Work Order CLO-WO-09-0361.

Requirement Not Satisfied	Source Document Number

Equipment Identification Number	System Identification
Serial Number 8995	Radiation Monitoring

Immediate actions Taken or Planned

1) Notified RC RadCon Management
2) Initiated PER in accordance with TFC-ESHQ-RP_INS-P-05
3) Performed evaluation of the out-of-tolerance (OOT) condition in accordance with TFC-ESHQ-RP_INS-P-05.

RC RadCon performed an evaluation of the out of tolerance condition in accordance with TFC-ESHQ-RP_INS-P-05. Upon review of calibration documentation of work order CLO-WO-09-0361, it was determined that the subject unit the unit was within the +/- 15% tolerance required by Article 555.5 of HNF-5183 (Tank Farm Radiological Control Manual) on all data points.

Upon review of the subject out-of-tolerance report, RC Radiological Control determined that for the out-of-tolerance flow rate, the conventionally true or true flow rate was greater than 15 percent more than the indicated flow rate. Therefore, the true volume (flow rate times sample time) of air sampled with this air sampler would have been greater than the volume calculated from this air sampler's indicated flow rate.

Air sample volume is used to determine the concentration of airborne radioactivity in the air by dividing an air sample's measured activity by the sample volume. Since the true volume of air would have been larger than the calculated volume of air, based on the out of tolerance condition, the calculated concentration would have been greater than the true concentration. This is true for any field use of this air sampler because the concentration is inversely proportional to the sample volume. This conservative bias ensures that decisions regarding airborne radioactivity area posting, respiratory protection requirements, or general air quality would have been protective in nature.

Based on the air sampler's out-of-tolerance condition producing conservative results in the field, no additional actions are necessary.

Recommended Corrective actions

Recommend screening as Trend Only.

Originator Contact

No

Originators Name	Originators ID	Originators Phone	Date Initiated
Duffy, Bill L	H7812206	(509) 373-3133	03/24/2009

SHIFT OPERATIONS REVIEW

Title

Air sampler serial number 8995 was found out of tolerance (OOT) during calibration in accordance with 6-RM-719

How Discovered	Agency
self-ID prior to event	

Reportability	SSC Operability	Operability Review	Comp Measures Req

Non-Reportable	N/A	N/A	
Describe actions Taken or Recommended			
No additional actions taken or recommended by Base Ops SO			
SO Reviewer Name	**SO Reviewer ID**	**SO Reviewer Phone**	**SO Review Date**
Strasser, David W	H0075556	(509) 373-2689	03/24/2009
SCREENING			
PER Significance Level			
Trend Only			
Independent Assessment Review	**Occurrence Report Number**	**Externally Identified**	
No		No	
Assigned Responsible Manager	**Facilities Rep / SSO**	**Safety Management Rep**	
Adams, Ed J			
Program		**Safety Management Program**	
• N/A		• Radiological Control	
PER Screening Comments			
No comments (Nancy Brown 03/25/09)			
Causal Code			
MGT/Comm/Train	**Human Performance**	**GEMS**	**Equip/Eng/Other**
Failed Barrier	**ORPS Code**	**Functional Area**	**Work Process**
	Not Applicable	Radiation Protection	• Radiological Instrumentation
ISMS	**Consequence Code**		
Perform work within the controls	• Rad Inst - Calibration - Out of tolerances, pass due calibrations, traceability issues, training, problems with procedural processes		
PER Screening Chair	**PER Screening Chair ID**	**PER Screening Chair Phone**	**PER Screening Date**
Brown, Nancy L	H0088797	(509) 373-0992	03/25/2009
PAAA REVIEW			
PAAA Screening	**PAAA Codes**	**Function Codes**	
PAAA, Non-NTS Reportable	• 10 CFR 830.122 (e)(4)	• RadCon Monitoring	
NTS Report Number	**NTS Report Date**		
Repetitive / Recurrent	**Programmatic**	**Intentional Violation / Misrepresentation**	
No	No	No	
PAAA Screening Comments			
PAAA Reviewer Name	**PAAA Review Date**		
Waters, Shaun F	03/25/2009		
PAAA Approver Name	**PAAA Approve Date**		
Waters, Shaun F	03/26/2009		
SENIOR MANAGEMENT REVIEW/CONCURRENCE			

TF Operations Morning Leadership Call			
N/A			
Instructions for Responsible Manager			
Senior Management	**Sr Mgmt ID**	**Sr Mgmt Phone**	**Sr Mgmt Review Date**
Brown, Nancy L	H0088797	(509) 373-0992	03/26/2009
ATTACHMENTS			
Link to PER			
AUDIT HISTORY			
Change Date	**Auditor**	**Comments**	
03/25/2009 13:57	Waters, Shaun F	PAAA Function Codes Changed	

-- End of Report --
03/26/2009 10:15 AM

Task# WRPS-PER-2009-0453			
E-STARS[R] Report Task Detail Report 03/26/2009 1015			
TASK INFORMATION			
Task#	WRPS-PER-2009-0453		
Subject	TREND; Air sampler serial number 8995 was found out of tolerance (OOT) during calibration in accordance with 6-RM-719		
Parent Task#		Status	CLOSED 03/26/2009
Reference		Due	03/26/2009
Originator	^PER Coordinator	Priority	Medium
Originator Phone		Category	PER
Origination Date	03/24/2009 0836	Generic1	None
Remote Task#		Generic2	None
Deliverable	PER Review	Generic3	None
Class	None	View Permissions	Global
Instructions	*No Instructions*		
ROUTING LISTS			
1	Review Initial PER		Inactive
	Review New PER		
	• ^SO(Strasser, David W) - Review - Concur - 03/24/2009 0853 *Instructions:*		
	• ^PER Screening(Brown, Nancy L) - Review - Concur - 03/25/2009 1423 *Instructions:*		
	• ^Mgr Review(Brown, Nancy L) - Review - Concur - 03/26/2009 0944 *Instructions:*		
ATTACHMENTS			
Attachments	1. Link to PER		
COMMENTS			
No Comments			
TASK DUE DATE HISTORY			
Modified	03/24/2009 0836 - ^PER Coordinator	New Due Date	03/26/2009 1630
SUB TASK HISTORY			

Task# WRPS-PER-2009-0453
No Subtasks
-- end of report --

Save

Problem Evaluation Request (PER)

WRPS-PER-2009-0454
Closed 03/26/2009 10:00

PER No	Date of Discovery	Time of Discovery (24:00)	Project
WRPS-PER-2009-0454	03/23/2009	12:00	RadCon-RC

Location

2704HV

How Was Problem Discovered

Maintenance Activity

Description of Concern or Problem

RC Radiological Control was notified by Base Operations Maintenence that air sampler serial number 8999 was found out of tolerance (greater than +/- 10% of Conventionally True Value) during calibration in accordance with 6-RM-719. Calibration was performed and documented in accordance with Work Order CLO-WO-09-0359.

Requirement Not Satisfied	Source Document Number

Equipment Identification Number	System Identification

Immediate actions Taken or Planned

Notified RC RadCon management.
Initiated PER in accordance with TFC-ESHQ-RP_INS-P-05.

RC RadCon performed an evaluation of the out of tolerance condition in accordance with TFC-ESHQ-RP_INS-P-05. Upon review of calibration documentation of work order CLO-WO-09-0359, it was determined that while the subject unit was outside the acceptable tolerance of 6-RM-719, the unit was within the +/- 15% tolerance required by Article 555.5 of HNF-5183 (Tank Farm Radiological Control Manual).

No further action or analysis is necessary for closure of this PER.

Recommended Corrective actions

Recommend screening as Trend Only.

Originator Contact

No

Originators Name	Originators ID	Originators Phone	Date Initiated
Duffy, Bill L	H7812206	(509) 373-3133	03/24/2009

SHIFT OPERATIONS REVIEW

Title

Air sampler serial number 8999 was found out of tolerance during calibration in accordance with 6-RM-719

How Discovered	Agency
self-ID prior to event	

Reportability	SSC Operability	Operability Review	Comp Measures Req
Non-Reportable	N/A	N/A	

Describe actions Taken or Recommended

No additional actions taken or recommended by Base Ops SO

SO Reviewer Name	SO Reviewer ID	SO Reviewer Phone	SO Review Date
Strasser, David W	H0075556	(509) 373-2689	03/24/2009

SCREENING

PER Significance Level	
Trend Only	

Independent Assessment Review	Occurrence Report Number	Externally Identified	
No		No	
Assigned	**Facilities Rep / SSO**	**Safety Management Rep**	

Responsible Manager			
Adams, Ed J			
Program		**Safety Management Program**	
• N/A		• Radiological Control	
PER Screening Comments			
No comments (Nancy Brown 03/25/09)			
Causal Code			
MGT/Comm/Train	**Human Performance**	**GEMS**	**Equip/Eng/Other**
Failed Barrier	**ORPS Code**	**Functional Area**	**Work Process**
	Not Applicable	Radiation Protection	• Radiological Instrumentation
ISMS	**Consequence Code**		
Perform work within the controls	• Rad Inst - Calibration - Out of tolerances, pass due calibrations, traceability issues, training, problems with procedural processes		
PER Screening Chair	**PER Screening Chair ID**	**PER Screening Chair Phone**	**PER Screening Date**
Brown, Nancy L	H0088797	(509) 373-0992	03/25/2009
PAAA REVIEW			
PAAA Screening	**PAAA Codes**	**Function Codes**	
PAAA, Non-NTS Reportable	• 10 CFR 830.122 (e)(4)	• RadCon Monitoring	
NTS Report Number	**NTS Report Date**		
Repetitive / Recurrent	**Programmatic**	**Intentional Violation / Misrepresentation**	
No	No	No	
PAAA Screening Comments			
PAAA Reviewer Name	**PAAA Review Date**		
Waters, Shaun F	03/25/2009		
PAAA Approver Name	**PAAA Approve Date**		
Waters, Shaun F	03/26/2009		
SENIOR MANAGEMENT REVIEW/CONCURRENCE			
TF Operations Morning Leadership Call			
N/A			
Instructions for Responsible Manager			
Senior Management	**Sr Mgmt ID**	**Sr Mgmt Phone**	**Sr Mgmt Review Date**
Brown, Nancy L	H0088797	(509) 373-0992	03/26/2009
ATTACHMENTS			
Link to PER			
AUDIT HISTORY			
Change Date	**Auditor**	**Comments**	

03/25/2009 13:58	Waters, Shaun F	PAAA Function Codes Changed

-- End of Report --
03/26/2009 10:15 AM

Task# WRPS-PER-2009-0454			
E-STARS[R] Report Task Detail Report 03/26/2009 1015			
TASK INFORMATION			
Task#	WRPS-PER-2009-0454		
Subject	TREND; Air sampler serial number 8999 was found out of tolerance during calibration in accordance with 6-RM-719		
Parent Task#		Status	CLOSED 03/26/2009
Reference		Due	03/26/2009
Originator	^PER Coordinator	Priority	Medium
Originator Phone		Category	PER
Origination Date	03/24/2009 0840	Generic1	None
Remote Task#		Generic2	None
Deliverable	PER Review	Generic3	None
Class	None	View Permissions	Global
Instructions	*No Instructions*		
ROUTING LISTS			
1	Review Initial PER		Inactive
	Review New PER		
	• ^SO(Strasser, David W) - Review - Concur - 03/24/2009 0858 *Instructions:*		
	• ^PER Screening(Brown, Nancy L) - Review - Concur - 03/25/2009 1424 *Instructions:*		
	• ^Mgr Review(Brown, Nancy L) - Review - Concur - 03/26/2009 0945 *Instructions:*		
ATTACHMENTS			
Attachments	1. Link to PER		
COMMENTS			
No Comments			
TASK DUE DATE HISTORY			
Modified	03/24/2009 0840 - ^PER Coordinator	New Due Date	03/26/2009 1630
SUB TASK HISTORY			

Task# WRPS-PER-2009-0454
No Subtasks
-- end of report --

Save

Problem Evaluation Request (PER)

WRPS-PER-2009-0455
Closed 03/26/2009 10:00

PER No	Date of Discovery	Time of Discovery (24:00)	Project
WRPS-PER-2009-0455	03/23/2009	12:00	RadCon-RC

Location

2704HV

How Was Problem Discovered

Maintenance Activity

Description of Concern or Problem

RC RadCon was notified by Base Operations Maintenance that air sampler serial number 10315 was found out of tolerance (OOT) during calibration in accordance with 6-RM-719. The tolerance requirement is +/- 10% of the Conventionally True Value (CTV). The as-found M&TE reading (CTV) was outside the allowable tolerance at indicated flow rates of 1, 2, 3, 4, and 5.5 CFM. Calibration was performed and documented in accordance with Work Order CLO-WO-09-0358.

Requirement Not Satisfied	Source Document Number

Equipment Identification Number	System Identification
SN 10315	Radiation Monitoring

Immediate actions Taken or Planned

1) Notified RC RadCon Management
2) Initiated PER in accordance with TFC-ESHQ-RP_INS-P-05
3) Performed evaluation of the out-of-tolerance (OOT) condition in accordance with TFC-ESHQ-RP_INS-P-05.

WRPS RadCon requires air flow meters to be calibrated to +10% while we are required to meet the flow tolerance provided in ANSI N42.17B indicates that air flow meters, differential pressure indicators, and other devices used to determine volumetric flow rates of air samplers and monitors should be calibrated to within ±15% of the true reading. This requirement can be found in the TANK FARMS RADIOLOGICAL CONTROL MANUAL (TFRCM) HNF-5183, Rev. 1 Chapter 5, Article 555.5. We hold Base Operations Maintenance to a higher tolerance because air sampler calibrations are not always calibrated in a controlled laboratory environment.

Upon review of the subject calibration report out of tolerance condition, RC RadCon determined that the air sampler was actually within the +15% acceptable tolerance for every test point evaluated during the calibration.

Based on the air sampler as found condition being within the required +15%, no additional actions are necessary.

Recommended Corrective actions

Recommend screening as Trend Only.

Originator Contact

No

Originators Name	Originators ID	Originators Phone	Date Initiated
Duffy, Bill L	H7812206	(509) 373-3133	03/24/2009

SHIFT OPERATIONS REVIEW

Title

Air sampler serial number 10315 was found out of tolerance (OOT) during calibration in accordance with 6-RM-719

How Discovered	Agency
self-ID prior to event	

Reportability	SSC Operability	Operability Review	Comp Measures Req
Non-Reportable	N/A	N/A	

Describe actions Taken or Recommended

No additional actions take or recommended by Base Ops SO

SO Reviewer Name	SO Reviewer ID	SO Reviewer Phone	SO Review Date
Strasser, David W	H0075556	(509) 373-2689	03/24/2009

SCREENING			
PER Significance Level			
Trend Only			
Independent Assessment Review	**Occurrence Report Number**	**Externally Identified**	
No		No	
Assigned Responsible Manager	**Facilities Rep / SSO**	**Safety Management Rep**	
Adams, Ed J			
Program		**Safety Management Program**	
• N/A		• Radiological Control	
PER Screening Comments			
No comments (Nancy Brown 03/25/09)			
Causal Code			
MGT/Comm/Train	**Human Performance**	**GEMS**	**Equip/Eng/Other**
Failed Barrier	**ORPS Code**	**Functional Area**	**Work Process**
	Not Applicable	Radiation Protection	• Radiological Instrumentation
ISMS	**Consequence Code**		
Perform work within the controls	• Rad Inst - Calibration - Out of tolerances, pass due calibrations, traceability issues, training, problems with procedural processes		
PER Screening Chair	**PER Screening Chair ID**	**PER Screening Chair Phone**	**PER Screening Date**
Brown, Nancy L	H0088797	(509) 373-0992	03/25/2009
PAAA REVIEW			
PAAA Screening	**PAAA Codes**	**Function Codes**	
PAAA, Non-NTS Reportable	• 10 CFR 830.122 (e)(4)	• RadCon Monitoring	
NTS Report Number	**NTS Report Date**		
Repetitive / Recurrent	**Programmatic**	**Intentional Violation / Misrepresentation**	
No	No	No	
PAAA Screening Comments			
PAAA Reviewer Name	**PAAA Review Date**		
Waters, Shaun F	03/25/2009		
PAAA Approver Name	**PAAA Approve Date**		
Waters, Shaun F	03/26/2009		
SENIOR MANAGEMENT REVIEW/CONCURRENCE			
TF Operations Morning Leadership Call			
N/A			
Instructions for Responsible Manager			
Senior Management	**Sr Mgmt ID**	**Sr Mgmt Phone**	**Sr Mgmt Review Date**

Brown, Nancy L	H0088797	(509) 373-0992	03/26/2009
ATTACHMENTS			
Link to PER			
AUDIT HISTORY			
Change Date	**Auditor**	**Comments**	
03/25/2009 13:58	Waters, Shaun F	PAAA Function Codes Changed	

-- End of Report --
03/26/2009 10:15 AM

Task# WRPS-PER-2009-0455			
E-STARS[R] Report Task Detail Report 03/26/2009 1015			
TASK INFORMATION			
Task#	WRPS-PER-2009-0455		
Subject	TREND; Air sampler serial number 10315 was found out of tolerance (OOT) during calibration in accordance with 6-RM-719		
Parent Task#		Status	CLOSED 03/26/2009
Reference		Due	03/26/2009
Originator	^PER Coordinator	Priority	Medium
Originator Phone		Category	PER
Origination Date	03/24/2009 0846	Generic1	None
Remote Task#		Generic2	None
Deliverable	PER Review	Generic3	None
Class	None	View Permissions	Global
Instructions	*No Instructions*		
ROUTING LISTS			
1	Review Initial PER		Inactive
	Review New PER		
	• ^SO(Strasser, David W) - Review - Concur - 03/24/2009 0905 *Instructions:*		
	• ^PER Screening(Brown, Nancy L) - Review - Concur - 03/25/2009 1426 *Instructions:*		
	• ^Mgr Review(Brown, Nancy L) - Review - Concur - 03/26/2009 0945 *Instructions:*		
ATTACHMENTS			
Attachments	1. Link to PER		
COMMENTS			
No Comments			
TASK DUE DATE HISTORY			
Modified	03/24/2009 0846 - ^PER Coordinator	New Due Date	03/26/2009 1630
SUB TASK HISTORY			

Task# WRPS-PER-2009-0455
No Subtasks
-- end of report --

Save

Problem Evaluation Request (PER)

WRPS-PER-2009-0456
Closed 03/26/2009 10:00

PER No	Date of Discovery	Time of Discovery (24:00)	Project
WRPS-PER-2009-0456	03/23/2009	12:00	RadCon-RC

Location

2704HV

How Was Problem Discovered

Maintenance Activity

Description of Concern or Problem

RC RadCon was notified by Base Operations Maintenance that air sampler serial number 10321 was found out of tolerance (OOT) during calibration in accordance with 6-RM-719. The tolerance requirement is +/- 10% of the Conventionally True Value (CTV). The as-found M&TE reading (CTV) was outside the allowable tolerance at indicated flow rates of 2, 3, and 4 CFM. Calibration was performed and documented in accordance with Work Order CLO-WO-09-0943.

Requirement Not Satisfied	Source Document Number

Equipment Identification Number	System Identification
SN 10321	Radiation Monitoring

Immediate actions Taken or Planned

1) Notified RC RadCon Management
2) Initiated PER in accordance with TFC-ESHQ-RP_INS-P-05
3) Performed evaluation of the out-of-tolerance (OOT) condition in accordance with TFC-ESHQ-RP_INS-P-05.

RC RadCon performed an evaluation of the out of tolerance condition in accordance with TFC-ESHQ-RP_INS-P-05. Upon review of calibration documentation of work order CLO-WO-09-0943, it was determined that the subject unit the unit was outside the +/- 15% tolerance required by Article 555.5 of HNF-5183 (Tank Farm Radiological Control Manual) on all OOT data points.

Upon review of the subject out-of-tolerance report, RC Radiological Control determined that for the out-of-tolerance flow rate, the conventionally true or true flow rate was greater than 15 percent more than the indicated flow rate. Therefore, the true volume (flow rate times sample time) of air sampled with this air sampler would have been greater than the volume calculated from this air sampler's indicated flow rate.

Air sample volume is used to determine the concentration of airborne radioactivity in the air by dividing an air sample's measured activity by the sample volume. Since the true volume of air would have been larger than the calculated volume of air, based on the out of tolerance condition, the calculated concentration would have been greater than the true concentration. This is true for any field use of this air sampler because the concentration is inversely proportional to the sample volume. This conservative bias ensures that decisions regarding airborne radioactivity area posting, respiratory protection requirements, or general air quality would have been protective in nature.

Based on the air sampler's out-of-tolerance condition producing conservative results in the field, no additional actions are necessary.

Recommended Corrective actions

Recommend screening as Trend Only.

Originator Contact

No

Originators Name	Originators ID	Originators Phone	Date Initiated
Duffy, Bill L	H7812206	(509) 373-3133	03/24/2009

SHIFT OPERATIONS REVIEW

Title

Air sampler serial number 10321 was found out of tolerance (OOT) during calibration in accordance with 6-RM-719

How Discovered	Agency
self-ID prior to event	

Reportability	SSC Operability	Operability Review	Comp Measures Req
Non-Reportable	N/A	N/A	

Describe actions Taken or Recommended			
No additonal actions taken or recommended by Base Ops SO			
SO Reviewer Name	**SO Reviewer ID**	**SO Reviewer Phone**	**SO Review Date**
Strasser, David W	H0075556	(509) 373-2689	03/24/2009
SCREENING			
PER Significance Level			
Trend Only			
Independent Assessment Review	**Occurrence Report Number**	**Externally Identified**	
No		No	
Assigned Responsible Manager	**Facilities Rep / SSO**	**Safety Management Rep**	
Adams, Ed J			
Program		**Safety Management Program**	
• N/A		• Radiological Control	
PER Screening Comments			
No comments (Nancy Brown 03/25/09)			
Causal Code			
MGT/Comm/Train	**Human Performance**	**GEMS**	**Equip/Eng/Other**
Failed Barrier	**ORPS Code**	**Functional Area**	**Work Process**
	Not Applicable	Radiation Protection	• Radiological Instrumentation
ISMS	**Consequence Code**		
Perform work within the controls	• Rad Inst - Calibration - Out of tolerances, pass due calibrations, traceability issues, training, problems with procedural processes		
PER Screening Chair	**PER Screening Chair ID**	**PER Screening Chair Phone**	**PER Screening Date**
Brown, Nancy L	H0088797	(509) 373-0992	03/25/2009
PAAA REVIEW			
PAAA Screening	**PAAA Codes**	**Function Codes**	
PAAA, Non-NTS Reportable	• 10 CFR 830.122 (e)(4)	• RadCon Monitoring	
NTS Report Number	**NTS Report Date**		
Repetitive / Recurrent	**Programmatic**	**Intentional Violation / Misrepresentation**	
No	No	No	
PAAA Screening Comments			
PAAA Reviewer Name	**PAAA Review Date**		
Waters, Shaun F	03/25/2009		
PAAA Approver Name	**PAAA Approve Date**		
Waters, Shaun F	03/26/2009		
SENIOR MANAGEMENT REVIEW/CONCURRENCE			
TF Operations Morning Leadership Call			

N/A			
Instructions for Responsible Manager			
Senior Management	**Sr Mgmt ID**	**Sr Mgmt Phone**	**Sr Mgmt Review Date**
Brown, Nancy L	H0088797	(509) 373-0992	03/26/2009
ATTACHMENTS			
Link to PER			
AUDIT HISTORY			
Change Date	**Auditor**	**Comments**	
03/25/2009 13:59	Waters, Shaun F	PAAA Function Codes Changed	

-- End of Report --
03/26/2009 10:15 AM

Task# WRPS-PER-2009-0456			
E-STARS[R] Report Task Detail Report 03/26/2009 1015			
TASK INFORMATION			
Task#	WRPS-PER-2009-0456		
Subject	TREND; Air sampler serial number 10321 was found out of tolerance (OOT) during calibration in accordance with 6-RM-719		
Parent Task#		Status	CLOSED 03/26/2009
Reference		Due	03/26/2009
Originator	^PER Coordinator	Priority	Medium
Originator Phone		Category	PER
Origination Date	03/24/2009 0851	Generic1	None
Remote Task#		Generic2	None
Deliverable	PER Review	Generic3	None
Class	None	View Permissions	Global
Instructions	*No Instructions*		
ROUTING LISTS			
1	Review Initial PER		Inactive
	Review New PER		
	• ^SO(Strasser, David W) - Review - Concur - 03/24/2009 0907 *Instructions:*		
	• ^PER Screening(Brown, Nancy L) - Review - Concur - 03/25/2009 1427 *Instructions:*		
	• ^Mgr Review(Brown, Nancy L) - Review - Concur - 03/26/2009 0946 *Instructions:*		
ATTACHMENTS			
Attachments	1. Link to PER		
COMMENTS			
No Comments			
TASK DUE DATE HISTORY			
Modified	03/24/2009 0851 - ^PER Coordinator	New Due Date	03/26/2009 1630
SUB TASK HISTORY			

Task# WRPS-PER-2009-0456
No Subtasks
-- end of report --

Save

Problem Evaluation Request (PER)

WRPS-PER-2009-0457
Closed 03/26/2009 10:00

PER No	Date of Discovery	Time of Discovery (24:00)	Project
WRPS-PER-2009-0457	03/23/2009	12:00	RadCon-RC

Location

2704HV

How Was Problem Discovered

Maintenance Activity

Description of Concern or Problem

RC RadCon was notified by Base Operations Maintenance that air sampler serial number 8502 was found out of tolerance (OOT) during calibration in accordance with 6-RM-719. The tolerance requirement is +/- 10% of the Conventionally True Value (CTV). The as-found M&TE reading (CTV) was outside the allowable tolerance at indicated flow rates of 3 and 4 CFM. Calibration was performed and documented in accordance with Work Order CLO-WO-09-0835.

Requirement Not Satisfied	Source Document Number

Equipment Identification Number	System Identification
SN 8502	Radiation Monitoring

Immediate actions Taken or Planned

1) Notified RC RadCon Management
2) Initiated PER in accordance with TFC-ESHQ-RP_INS-P-05
3) Performed evaluation of the out-of-tolerance (OOT) condition in accordance with TFC-ESHQ-RP_INS-P-05.

RC RadCon performed an evaluation of the out of tolerance condition in accordance with TFC-ESHQ-RP_INS-P-05. Upon review of calibration documentation of work order CLO-WO-09-0835, it was determined that the subject unit the unit was outside the +/- 15% tolerance required by Article 555.5 of HNF-5183 (Tank Farm Radiological Control Manual) at only the 4 CFM data point.

Upon review of the subject out-of-tolerance report, RC Radiological Control determined that for the out-of-tolerance flow rate, the conventionally true or true flow rate was greater than 15 percent more than the indicated flow rate. Therefore, the true volume (flow rate times sample time) of air sampled with this air sampler would have been greater than the volume calculated from this air sampler's indicated flow rate.

Air sample volume is used to determine the concentration of airborne radioactivity in the air by dividing an air sample's measured activity by the sample volume. Since the true volume of air would have been larger than the calculated volume of air, based on the out of tolerance condition, the calculated concentration would have been greater than the true concentration. This is true for any field use of this air sampler because the concentration is inversely proportional to the sample volume. This conservative bias ensures that decisions regarding airborne radioactivity area posting, respiratory protection requirements, or general air quality would have been protective in nature.

Based on the air sampler's out-of-tolerance condition producing conservative results in the field, no additional actions are necessary.

Recommended Corrective actions

Recommend screening as Trend Only.

Originator Contact

No

Originators Name	Originators ID	Originators Phone	Date Initiated
Duffy, Bill L	H7812206	(509) 373-3133	03/24/2009

SHIFT OPERATIONS REVIEW

Title

air sampler serial number 8502 was found out of tolerance (OOT) during calibration in accordance with 6-RM-719

How Discovered	Agency
self-ID prior to event	

Reportability	SSC Operability	Operability Review	Comp Measures Req
Non-Reportable	N/A	N/A	

Describe actions Taken or Recommended			
No additional actions taken or recommended by Base Ops SO			
SO Reviewer Name	**SO Reviewer ID**	**SO Reviewer Phone**	**SO Review Date**
Strasser, David W	H0075556	(509) 373-2689	03/24/2009
SCREENING			
PER Significance Level			
Trend Only			
Independent Assessment Review	**Occurrence Report Number**	**Externally Identified**	
No		No	
Assigned Responsible Manager	**Facilities Rep / SSO**	**Safety Management Rep**	
Adams, Ed J			
Program		**Safety Management Program**	
• N/A		• Radiological Control	
PER Screening Comments			
No comments (Nancy Brown 03/25/09)			
Causal Code			
MGT/Comm/Train	**Human Performance**	**GEMS**	**Equip/Eng/Other**
Failed Barrier	**ORPS Code**	**Functional Area**	**Work Process**
	Not Applicable	Radiation Protection	• Radiological Instrumentation
ISMS	**Consequence Code**		
Perform work within the controls	• Rad Inst - Calibration - Out of tolerances, pass due calibrations, traceability issues, training, problems with procedural processes		
PER Screening Chair	**PER Screening Chair ID**	**PER Screening Chair Phone**	**PER Screening Date**
Brown, Nancy L	H0088797	(509) 373-0992	03/25/2009
PAAA REVIEW			
PAAA Screening	**PAAA Codes**	**Function Codes**	
PAAA, Non-NTS Reportable	• 10 CFR 830.122 (e)(4)	• RadCon Monitoring	
NTS Report Number	**NTS Report Date**		
Repetitive / Recurrent	**Programmatic**	**Intentional Violation / Misrepresentation**	
No	No	No	
PAAA Screening Comments			
PAAA Reviewer Name	**PAAA Review Date**		
Waters, Shaun F	03/25/2009		
PAAA Approver Name	**PAAA Approve Date**		
Waters, Shaun F	03/26/2009		
SENIOR MANAGEMENT REVIEW/CONCURRENCE			
TF Operations Morning Leadership Call			

N/A			
Instructions for Responsible Manager			
Senior Management	**Sr Mgmt ID**	**Sr Mgmt Phone**	**Sr Mgmt Review Date**
Brown, Nancy L	H0088797	(509) 373-0992	03/26/2009
ATTACHMENTS			
Link to PER			
AUDIT HISTORY			
Change Date	**Auditor**	**Comments**	
03/25/2009 13:59	Waters, Shaun F	PAAA Function Codes Changed	

-- End of Report --
03/26/2009 10:15 AM

Task# WRPS-PER-2009-0457			
E-STARS[R] Report Task Detail Report 03/26/2009 1015			
TASK INFORMATION			
Task#	WRPS-PER-2009-0457		
Subject	TREND; air sampler serial number 8502 was found out of tolerance (OOT) during calibration in accordance with 6-RM-719		
Parent Task#		Status	CLOSED 03/26/2009
Reference		Due	03/26/2009
Originator	^PER Coordinator	Priority	Medium
Originator Phone		Category	PER
Origination Date	03/24/2009 0855	Generic1	None
Remote Task#		Generic2	None
Deliverable	PER Review	Generic3	None
Class	None	View Permissions	Global
Instructions	*No Instructions*		
ROUTING LISTS			
1	Review Initial PER		Inactive
	Review New PER		
	• ^SO(Strasser, David W) - Review - Concur - 03/24/2009 0919 *Instructions:*		
	• ^PER Screening(Brown, Nancy L) - Review - Concur - 03/25/2009 1429 *Instructions:*		
	• ^Mgr Review(Brown, Nancy L) - Review - Concur - 03/26/2009 0946 *Instructions:*		
ATTACHMENTS			
Attachments	1. Link to PER		
COMMENTS			
No Comments			
TASK DUE DATE HISTORY			
Modified	03/24/2009 0855 - ^PER Coordinator	New Due Date	03/26/2009 1630
SUB TASK HISTORY			

Task# WRPS-PER-2009-0457
No Subtasks
-- end of report --

Save

Problem Evaluation Request (PER)

WRPS-PER-2009-0458
Closed 03/26/2009 10:00

PER No	Date of Discovery	Time of Discovery (24:00)	Project
WRPS-PER-2009-0458	03/23/2009	12:00	RadCon-RC

Location

2704HV

How Was Problem Discovered

Maintenance Activity

Description of Concern or Problem

RC RadCon was notified by Base Operations Maintenance that air sampler serial number 8496 was found out of tolerance (OOT) during calibration in accordance with 6-RM-719. The tolerance requirement is +/- 10% of the Conventionally True Value (CTV). The as-found M&TE reading (CTV) was outside the allowable tolerance at indicated flow rates of 1, 2, 3, 4, and 5 CFM. Calibration was performed and documented in accordance with Work Order CLO-WO-09-0830.

Requirement Not Satisfied	Source Document Number

Equipment Identification Number	System Identification
SN 8496	Radiation Monitoring

Immediate actions Taken or Planned

1) Notified RC RadCon Management
2) Initiated PER in accordance with TFC-ESHQ-RP_INS-P-05
3) Performed evaluation of the out-of-tolerance (OOT) condition in accordance with TFC-ESHQ-RP_INS-P-05.

RC RadCon performed an evaluation of the out of tolerance condition in accordance with TFC-ESHQ-RP_INS-P-05. Upon review of calibration documentation of work order CLO-WO-09-0830, it was determined that the subject unit the unit was outside the +/- 15% tolerance required by Article 555.5 of HNF-5183 (Tank Farm Radiological Control Manual) on all data points.

Upon review of the subject out-of-tolerance report, RC Radiological Control determined that for the out-of-tolerance flow rate, the conventionally true or true flow rate was greater than 15 percent more than the indicated flow rate. Therefore, the true volume (flow rate times sample time) of air sampled with this air sampler would have been greater than the volume calculated from this air sampler's indicated flow rate.

Air sample volume is used to determine the concentration of airborne radioactivity in the air by dividing an air sample's measured activity by the sample volume. Since the true volume of air would have been larger than the calculated volume of air, based on the out of tolerance condition, the calculated concentration would have been greater than the true concentration. This is true for any field use of this air sampler because the concentration is inversely proportional to the sample volume. This conservative bias ensures that decisions regarding airborne radioactivity area posting, respiratory protection requirements, or general air quality would have been protective in nature.

Based on the air sampler's out-of-tolerance condition producing conservative results in the field, no additional actions are necessary.

Recommended Corrective actions

Recommend screening as Trend Only.

Originator Contact

No

Originators Name	Originators ID	Originators Phone	Date Initiated
Duffy, Bill L	H7812206	(509) 373-3133	03/24/2009

SHIFT OPERATIONS REVIEW

Title

Air sampler serial number 8496 was found out of tolerance (OOT) during calibration in accordance with 6-RM-719

How Discovered	Agency
self-ID prior to event	

Reportability	SSC Operability	Operability Review	Comp Measures Req
Non-Reportable	N/A	N/A	

Describe actions Taken or Recommended			
No additional actions taken or recommended by Base Ops SO			
SO Reviewer Name	**SO Reviewer ID**	**SO Reviewer Phone**	**SO Review Date**
Strasser, David W	H0075556	(509) 373-2689	03/24/2009
SCREENING			
PER Significance Level			
Trend Only			
Independent Assessment Review	**Occurrence Report Number**	**Externally Identified**	
No		No	
Assigned Responsible Manager	**Facilities Rep / SSO**	**Safety Management Rep**	
Adams, Ed J			
Program		**Safety Management Program**	
• N/A		• Radiological Control	
PER Screening Comments			
No comments (Nancy Brown 03/25/09)			
Causal Code			
MGT/Comm/Train	**Human Performance**	**GEMS**	**Equip/Eng/Other**
Failed Barrier	**ORPS Code**	**Functional Area**	**Work Process**
	Not Applicable	Radiation Protection	• Radiological Instrumentation
ISMS	**Consequence Code**		
Perform work within the controls	• Rad Inst - Calibration - Out of tolerances, pass due calibrations, traceability issues, training, problems with procedural processes		
PER Screening Chair	**PER Screening Chair ID**	**PER Screening Chair Phone**	**PER Screening Date**
Brown, Nancy L	H0088797	(509) 373-0992	03/25/2009
PAAA REVIEW			
PAAA Screening	**PAAA Codes**	**Function Codes**	
PAAA, Non-NTS Reportable	• 10 CFR 830.122 (e)(4)	• RadCon Monitoring	
NTS Report Number	**NTS Report Date**		
Repetitive / Recurrent	**Programmatic**	**Intentional Violation / Misrepresentation**	
No	No	No	
PAAA Screening Comments			
PAAA Reviewer Name	**PAAA Review Date**		
Waters, Shaun F	03/25/2009		
PAAA Approver Name	**PAAA Approve Date**		
Waters, Shaun F	03/26/2009		
SENIOR MANAGEMENT REVIEW/CONCURRENCE			
TF Operations Morning Leadership Call			

N/A			
Instructions for Responsible Manager			
Senior Management	**Sr Mgmt ID**	**Sr Mgmt Phone**	**Sr Mgmt Review Date**
Brown, Nancy L	H0088797	(509) 373-0992	03/26/2009
ATTACHMENTS			
Link to PER			
AUDIT HISTORY			
Change Date	**Auditor**	**Comments**	
03/25/2009 14:00	Waters, Shaun F	PAAA Function Codes Changed	

-- End of Report --
03/26/2009 10:15 AM

Task# WRPS-PER-2009-0458			
E-STARS[R] Report Task Detail Report 03/26/2009 1015			
TASK INFORMATION			
Task#	WRPS-PER-2009-0458		
Subject	TREND; Air sampler serial number 8496 was found out of tolerance (OOT) during calibration in accordance with 6-RM-719		
Parent Task#		Status	CLOSED 03/26/2009
Reference		Due	03/26/2009
Originator	^PER Coordinator	Priority	Medium
Originator Phone		Category	PER
Origination Date	03/24/2009 0901	Generic1	None
Remote Task#		Generic2	None
Deliverable	PER Review	Generic3	None
Class	None	View Permissions	Global
Instructions	*No Instructions*		
ROUTING LISTS			
1	Review Initial PER		Inactive
	Review New PER		
	• ^SO(Strasser, David W) - Review - Concur - 03/24/2009 0921 *Instructions:*		
	• ^PER Screening(Brown, Nancy L) - Review - Concur - 03/25/2009 1430 *Instructions:*		
	• ^Mgr Review(Brown, Nancy L) - Review - Concur - 03/26/2009 0947 *Instructions:*		
ATTACHMENTS			
Attachments	1. Link to PER		
COMMENTS			
No Comments			
TASK DUE DATE HISTORY			
Modified	03/24/2009 0901 - ^PER Coordinator	New Due Date	03/26/2009 1630
SUB TASK HISTORY			

Task# WRPS-PER-2009-0458
No Subtasks
-- end of report --

Save

Problem Evaluation Request (PER)

WRPS-PER-2009-0459
Closed 03/26/2009 10:00

PER No	Date of Discovery	Time of Discovery (24:00)	Project
WRPS-PER-2009-0459	03/23/2009	12:00	RadCon-RC

Location

2704HV

How Was Problem Discovered

Maintenance Activity

Description of Concern or Problem

RC RadCon was notified by Base Operations Maintenance that Lapel Air Sampler Rotameter 07-007 was found out of tolerance (OOT) during calibration in accordance with 6-FCD-720. The tolerance requirement is +/- 10% of the Conventionally True Value (CTV). The as-found M&TE reading (CTV) was outside the allowable tolerance at indicated flow rates of 1 LPM. Calibration was performed and documented in accordance with Work Order CLO-WO-09-0328.

Requirement Not Satisfied	Source Document Number

Equipment Identification Number	System Identification
	Not Applicable

Immediate actions Taken or Planned

1) Notified RC RadCon Management
2) Initiated PER in accordance with TFC-ESHQ-RP_INS-P-05
3) Performed evaluation of the out-of-tolerance (OOT) condition in accordance with TFC-ESHQ-RP_INS-P-05.

RC RadCon performed an evaluation of the out of tolerance condition in accordance with TFC-ESHQ-RP_INS-P-05. Upon review of calibration documentation of work order CLO-WO-09-0328, it was determined that the subject unit the unit was outside the +/- 15% tolerance required by Article 555.5 of HNF-5183 (Tank Farm Radiological Control Manual) on the 1 LPM data point.

Procedure direction in TFC-ESHQ-RP_DOS-P-11, Derived Air Concentration (DAC) - Hour Assessment, sets lapel air samplers at 4 LPM using the external rotameter. Because the only use of the lapel rotameter is at 4 LPM, the OOT condition at 1 LPM is of no consequence and no additional actions are required.

Recommended Corrective actions

Recommend screening as Trend Only.

Originator Contact

No

Originators Name	Originators ID	Originators Phone	Date Initiated
Duffy, Bill L	H7812206	(509) 373-3133	03/24/2009

SHIFT OPERATIONS REVIEW

Title

Lapel Air Sampler Rotameter 07-007 was found out of tolerance (OOT) during calibration in accordance with 6-FCD-720

How Discovered	Agency
self-ID prior to event	

Reportability	SSC Operability	Operability Review	Comp Measures Req
Non-Reportable	N/A	N/A	

Describe actions Taken or Recommended

No additional actions taken or recommended by Base Ops SO

SO Reviewer Name	SO Reviewer ID	SO Reviewer Phone	SO Review Date
Strasser, David W	H0075556	(509) 373-2689	03/24/2009

SCREENING

PER Significance Level	
Trend Only	

Independent Assessment Review	Occurrence Report Number	Externally Identified	
No		No	
Assigned Responsible Manager	**Facilities Rep / SSO**	**Safety Management Rep**	
Adams, Ed J			
Program		**Safety Management Program**	
• N/A		• Radiological Control	
PER Screening Comments			
No comments (Nancy Brown 03/25/09)			
Causal Code			
MGT/Comm/Train	**Human Performance**	**GEMS**	**Equip/Eng/Other**
Failed Barrier	**ORPS Code**	**Functional Area**	**Work Process**
	Not Applicable	Radiation Protection	• Radiological Instrumentation
ISMS	**Consequence Code**		
Perform work within the controls	• Rad Inst - Calibration - Out of tolerances, pass due calibrations, traceability issues, training, problems with procedural processes		
PER Screening Chair	**PER Screening Chair ID**	**PER Screening Chair Phone**	**PER Screening Date**
Brown, Nancy L	H0088797	(509) 373-0992	03/25/2009
PAAA REVIEW			
PAAA Screening	**PAAA Codes**	**Function Codes**	
PAAA, Non-NTS Reportable	• 10 CFR 830.122 (e)(4)	• RadCon Monitoring	
NTS Report Number	**NTS Report Date**		
Repetitive / Recurrent	**Programmatic**	**Intentional Violation / Misrepresentation**	
No	No	No	
PAAA Screening Comments			
PAAA Reviewer Name	**PAAA Review Date**		
Waters, Shaun F	03/25/2009		
PAAA Approver Name	**PAAA Approve Date**		
Waters, Shaun F	03/26/2009		
SENIOR MANAGEMENT REVIEW/CONCURRENCE			
TF Operations Morning Leadership Call			
N/A			
Instructions for Responsible Manager			
Senior Management	**Sr Mgmt ID**	**Sr Mgmt Phone**	**Sr Mgmt Review Date**
Brown, Nancy L	H0088797	(509) 373-0992	03/26/2009
ATTACHMENTS			
Link to PER			

AUDIT HISTORY		
Change Date	**Auditor**	**Comments**
03/25/2009 14:00	Waters, Shaun F	PAAA Function Codes Changed

-- End of Report --
03/26/2009 10:15 AM

Task# WRPS-PER-2009-0459			
E-STARS[R] Report Task Detail Report 03/26/2009 1015			
TASK INFORMATION			
Task#	WRPS-PER-2009-0459		
Subject	TREND; Lapel Air Sampler Rotameter 07-007 was found out of tolerance (OOT) during calibration in accordance with 6-FCD-720		
Parent Task#		Status	CLOSED 03/26/2009
Reference		Due	03/26/2009
Originator	^PER Coordinator	Priority	Medium
Originator Phone		Category	PER
Origination Date	03/24/2009 0916	Generic1	None
Remote Task#		Generic2	None
Deliverable	PER Review	Generic3	None
Class	None	View Permissions	Global
Instructions	*No Instructions*		
ROUTING LISTS			
1	Review Initial PER		Inactive
	Review New PER		
	• ^SO(Strasser, David W) - Review - Concur - 03/24/2009 0929 *Instructions:*		
	• ^PER Screening(Brown, Nancy L) - Review - Concur - 03/25/2009 1431 *Instructions:*		
	• ^Mgr Review(Brown, Nancy L) - Review - Concur - 03/26/2009 0947 *Instructions:*		
ATTACHMENTS			
Attachments	1. Link to PER		
COMMENTS			
No Comments			
TASK DUE DATE HISTORY			
Modified	03/24/2009 0916 - ^PER Coordinator	New Due Date	03/26/2009 1630
SUB TASK HISTORY			

Task# WRPS-PER-2009-0459
No Subtasks
-- end of report --

Save

Problem Evaluation Request (PER)

WRPS-PER-2009-0460
Closed 03/30/2009 08:30

PER No	Date of Discovery	Time of Discovery (24:00)	Project
WRPS-PER-2009-0460	03/24/2009	10:00	Maintenance

Location

All Tank Farms

How Was Problem Discovered

Maintenance Activity

Description of Concern or Problem

While attempting to repair Radeco Air sampler 272AS019, contamination (4,000 dpm/100 cm2 beta/gamma <20 dpm/100cm2) was discovered on the inner housing and motor.

Requirement Not Satisfied	Source Document Number

Equipment Identification Number	System Identification

Immediate actions Taken or Planned

Notified the Instrument Technician First Line
Notified HPT First Line
Operator was dispatched to the location to assist in clean up

Recommended Corrective actions

None
Information Only

Originator Contact

No

Originators Name	Originators ID	Originators Phone	Date Initiated
Toon, Jon M	H0027658	(509) 373-1654	03/24/2009

SHIFT OPERATIONS REVIEW

Title

Radeco Air sampler 272AS019, contamination

How Discovered	Agency
self-ID prior to event	

Reportability	SSC Operability	Operability Review	Comp Measures Req
Non-Reportable	N/A	N/A	

Describe actions Taken or Recommended

No additional Base Operations Shift Office actions required at this time.

SO Reviewer Name	SO Reviewer ID	SO Reviewer Phone	SO Review Date
Johnson, Brian A	H0003531	(509) 373-2696	03/25/2009

SCREENING

PER Significance Level	
Trend Only	

Independent Assessment Review	Occurrence Report Number	Externally Identified	
No		No	

Assigned Responsible Manager	Facilities Rep / SSO	Safety Management Rep	
Brannan, Patrick			

(Brad)			
Program		**Safety Management Program**	
• N/A		• Radiological Control	

PER Screening Comments

PER on hold to verify that air sampler was labeled or tagged prior to sending for repair and that it was repaired in a radiologically controlled area
(Nancy Brown 03/26/09)

"The contaminated air sampler was labeled in accordance with 10CFR835.605 and radiologically controlled by the HPT who exercised the posting exception as allowed by 10CFR835.604(a)."
(Shaun Waters, PAAA Reviewer 03/27/09)
No further actions required.
(Nancy Brown 03/27/09)

Causal Code

MGT/Comm/Train	**Human Performance**	**GEMS**	**Equip/Eng/Other**
Failed Barrier	**ORPS Code**	**Functional Area**	**Work Process**
	Not Applicable	Radiation Protection	• Radiological Contamination Control
ISMS	**Consequence Code**		
Identify and analyze hazards	• Contam - Outside Posted Area - Discovery of contamination above table 2-2 levels outside of areas,established for control of contamination. (e.g. outside RBA)		
PER Screening Chair	**PER Screening Chair ID**	**PER Screening Chair Phone**	**PER Screening Date**
Brown, Nancy L	H0088797	(509) 373-0992	03/27/2009

PAAA REVIEW

PAAA Screening	**PAAA Codes**	**Function Codes**	
Not subject to PAAA			
NTS Report Number	**NTS Report Date**		
Repetitive / Recurrent	**Programmatic**	**Intentional Violation / Misrepresentation**	
No	No	No	

PAAA Screening Comments

PAAA Reviewer Name	**PAAA Review Date**	
Waters, Shaun F	03/27/2009	
PAAA Approver Name	**PAAA Approve Date**	
Waters, Shaun F	03/30/2009	

SENIOR MANAGEMENT REVIEW/CONCURRENCE

TF Operations Morning Leadership Call

N/A

Instructions for Responsible Manager

Senior Management	**Sr Mgmt ID**	**Sr Mgmt Phone**	**Sr Mgmt Review Date**
Brown, Nancy L	H0088797	(509) 373-0992	03/30/2009

ATTACHMENTS
Link to PER

-- End of Report --
03/30/2009 08:45 AM

Task# WRPS-PER-2009-0460

E-STARS[R] Report
Task Detail Report
03/30/2009 0845

TASK INFORMATION			
Task#	WRPS-PER-2009-0460		
Subject	TREND; Radeco Air sampler 272AS019, contamination		
Parent Task#		Status	CLOSED 03/30/2009
Reference		Due	03/26/2009
Originator	^PER Coordinator	Priority	Medium
Originator Phone		Category	PER
Origination Date	03/24/2009 1233	Generic1	None
Remote Task#		Generic2	None
Deliverable	PER Review	Generic3	None
Class	None	View Permissions	Global
Instructions	*No Instructions*		

ROUTING LISTS		
1	Review Initial PER	Inactive
	Review New PER	
	• ^SO(Johnson, Brian A) - Review - Concur - 03/25/2009 1259 *Instructions:*	
	• ^PER Screening(Brown, Nancy L) - Review - Concur - 03/27/2009 1235 *Instructions:*	
	• ^Mgr Review(Brown, Nancy L) - Review - Concur - 03/30/2009 0812 *Instructions:*	

ATTACHMENTS	
Attachments	1. Link to PER

COMMENTS

No Comments

TASK DUE DATE HISTORY			
Modified	03/24/2009 1233 - ^PER Coordinator	New Due Date	03/26/2009 1630

SUB TASK HISTORY

No Subtasks

-- end of report --

Save

Problem Evaluation Request (PER)

WRPS-PER-2009-0463
Closed 03/27/2009 09:15

PER No	Date of Discovery	Time of Discovery (24:00)	Project
WRPS-PER-2009-0463	03/24/2009	18:30	Base Ops

Location

S Farm

How Was Problem Discovered

Radiological Surveys

Description of Concern or Problem

During performance of Scheduled Task COF-W007 rabbit droppings (old) were identified near the S-112 Control Trailer fenceline exceeding action levels of 10,000 dpm beta-gamma. Droppings were reading 800,000 dpm beta-gamma. Dose rate readings were <.5 mRem/hr and 9 mRad/hr. No alpha detected. Droppings lifted with "sticky pads". See Radiation Survey Report #COF-010285 for further information.

Requirement Not Satisfied	Source Document Number

Equipment Identification Number	System Identification

Immediate actions Taken or Planned

Disposed of in radwaste container. Notified shift office. Issued PER.

Recommended Corrective actions

N/A

Originator Contact

No

Originators Name	Originators ID	Originators Phone	Date Initiated
Davis, Marieca L	H0084256	(509) 373-7354	03/24/2009

SHIFT OPERATIONS REVIEW

Title

Rabbit droppings identified near the S-112 Control Trailer

How Discovered	Agency
self-ID prior to event	

Reportability	SSC Operability	Operability Review	Comp Measures Req
Non-Reportable	N/A	N/A	

Describe actions Taken or Recommended

Confirmed with HPT that droppings were inside farm (posted CA). Droppings picked up and disposed of properly. No additional Base Ops Shift Office actions required at this time.

SO Reviewer Name	SO Reviewer ID	SO Reviewer Phone	SO Review Date
Johnson, Brian A	H0003531	(509) 373-2696	03/25/2009

SCREENING

PER Significance Level	
Trend Only	

Independent Assessment Review	Occurrence Report Number	Externally Identified	
No		No	

Assigned Responsible Manager	Facilities Rep / SSO	Safety Management Rep	
Ficklin, Jim			

Program		Safety Management Program	
• N/A		• Radiological Control	
PER Screening Comments			
cc: Brad Brannan (Nancy Brown 03/26/09)			
Causal Code			
MGT/Comm/Train	**Human Performance**	**GEMS**	**Equip/Eng/Other**
Failed Barrier	**ORPS Code**	**Functional Area**	**Work Process**
	Not Applicable	Radiation Protection	• Radiological Contamination Control
ISMS	**Consequence Code**		
Identify and analyze hazards	• Contam - Legacy - Discovery of contamination from past practices or spills in soil, animal, or vegetation		
PER Screening Chair	**PER Screening Chair ID**	**PER Screening Chair Phone**	**PER Screening Date**
Brown, Nancy L	H0088797	(509) 373-0992	03/26/2009
PAAA REVIEW			
PAAA Screening	**PAAA Codes**	**Function Codes**	
Not subject to PAAA			
NTS Report Number	**NTS Report Date**		
Repetitive / Recurrent	**Programmatic**	**Intentional Violation / Misrepresentation**	
No	No	No	
PAAA Screening Comments			
PAAA Reviewer Name	**PAAA Review Date**		
Waters, Shaun F	03/26/2009		
PAAA Approver Name	**PAAA Approve Date**		
Waters, Shaun F	03/27/2009		
SENIOR MANAGEMENT REVIEW/CONCURRENCE			
TF Operations Morning Leadership Call			
N/A			
Instructions for Responsible Manager			
Senior Management	**Sr Mgmt ID**	**Sr Mgmt Phone**	**Sr Mgmt Review Date**
Brown, Nancy L	H0088797	(509) 373-0992	03/27/2009
ATTACHMENTS			
Link to PER			

-- End of Report --
03/27/2009 09:15 AM

Task# WRPS-PER-2009-0463

E-STARS[R] Report
Task Detail Report
03/27/2009 0915

TASK INFORMATION			
Task#	WRPS-PER-2009-0463		
Subject	TREND; Rabbit droppings identified near the S-112 Control Trailer		
Parent Task#		Status	CLOSED 03/27/2009
Reference		Due	03/26/2009
Originator	^PER Coordinator	Priority	Medium
Originator Phone		Category	PER
Origination Date	03/24/2009 2333	Generic1	None
Remote Task#		Generic2	None
Deliverable	PER Review	Generic3	None
Class	None	View Permissions	Global
Instructions	*No Instructions*		

ROUTING LISTS		
1	Review Initial PER	Inactive
	Review New PER	
	• ^SO(Johnson, Brian A) - Review - Concur - 03/25/2009 1240 *Instructions:*	
	• ^PER Screening(Brown, Nancy L) - Review - Concur - 03/26/2009 1255 *Instructions:*	
	• ^Mgr Review(Brown, Nancy L) - Review - Concur - 03/27/2009 0900 *Instructions:*	

ATTACHMENTS	
Attachments	1. Link to PER

COMMENTS

No Comments

TASK DUE DATE HISTORY			
Modified	03/24/2009 2333 - ^PER Coordinator	New Due Date	03/26/2009 1630

SUB TASK HISTORY

No Subtasks

-- end of report --

Save

Problem Evaluation Request (PER)

WRPS-PER-2009-0466
In Process/Work

PER No	Date of Discovery	Time of Discovery (24:00)	Project
WRPS-PER-2009-0466	03/25/2009	09:30	Base Ops

Location

AN Farm

How Was Problem Discovered

Radiological Surveys

Description of Concern or Problem

WHILE DOING THE THE AN-FARM WEEKLY SURVEY,H P S COULD NOT FIND ANY WALK-WAY ACCROSS THE TRENCHES AROUND AN-104. THEN THE H P S ASK THE CONSTRUCTION PIC IF THERE ANY CROSSING POINTS INTO THE AN-104 TANK? HE FOUND NO PLACE TO ENTER, WITH OUT JSA AND PRE-JOB.

Requirement Not Satisfied	Source Document Number
HNF-5183, 552 & 554	SURVEY WT0-013654
Equipment Identification Number	**System Identification**
AN-104	Radiation Monitoring

Immediate actions Taken or Planned

SUPERVISOR NOTIFIED, UNABLE TO SURVEY REQUIRED WEEKLY DATA POINTS TO FINNISH THE WEEKLY SURVEY. STARTED PER IN SYSTEM....

Recommended Corrective actions

JOB 08-0839 BOTH PIC SHOULD NOT THINK THAT THEY HAVE THE ONLY JOB IN THE AN FARM.
THEY SHOULD READ THEIR JSA. PLUS HAVE A JSA SIGN IN SHEET AT THE WORK SITE FOR OTHER PERSONNEL WORKING IN AN-FARM

Originator Contact

I would like to review the the corrective actions at closure to ensure they were effective

Originators Name	Originators ID	Originators Phone	Date Initiated
Arave, Doug H	H0042732	(509) 373-2526	03/25/2009

SHIFT OPERATIONS REVIEW

Title

HPT surveys in AN Farm

How Discovered	Agency
self-ID prior to event	

Reportability	SSC Operability	Operability Review	Comp Measures Req
Non-Reportable	N/A	N/A	

Describe actions Taken or Recommended

Assign to RadCon management to resolve. No additional Base Operations Shift Office actions required at this time.

SO Reviewer Name	SO Reviewer ID	SO Reviewer Phone	SO Review Date
Johnson, Brian A	H0003531	(509) 373-2696	03/25/2009

SCREENING

PER Significance Level			
PIE/CIM			
Independent Assessment Review	**Occurrence Report Number**	**Externally Identified**	
No		No	
Assigned Responsible Manager	**Facilities Rep / SSO**	**Safety Management Rep**	
Hopkins, Gary P			
Program		**Safety Management Program**	

• N/A		• Conduct of Operations	
PER Screening Comments			
See "Recommended Corrective Actions" cc: Rocky Brooks, Brad Brannan (Nancy Brown 03/26/09)			
Causal Code			
MGT/Comm/Train	**Human Performance**	**GEMS**	**Equip/Eng/Other**
Failed Barrier	**ORPS Code**	**Functional Area**	**Work Process**
	Not Applicable	Construction Management	• Access Control - control room or tank farm radiological area access • JHA/JSA • Radiological Surveillance
ISMS	**Consequence Code**		
Provide feedback and continuous improvement	• Communications - Inadequate communications, roles, responsibilities • Rad Surveillance - Missed Routine - Routine task was missed without previous management knowledge (unplanned)		
PER Screening Chair	**PER Screening Chair ID**	**PER Screening Chair Phone**	**PER Screening Date**
Brown, Nancy L	H0088797	(509) 373-0992	03/26/2009
PAAA REVIEW			
PAAA Screening	**PAAA Codes**	**Function Codes**	
Not subject to PAAA			
NTS Report Number	**NTS Report Date**		
Repetitive / Recurrent	**Programmatic**	**Intentional Violation / Misrepresentation**	
No	No	No	
PAAA Screening Comments			
PAAA Reviewer Name	**PAAA Review Date**		
Waters, Shaun F	03/26/2009		
PAAA Approver Name	**PAAA Approve Date**		
Anderson, Craig E	04/01/2009		
SENIOR MANAGEMENT REVIEW/CONCURRENCE			
TF Operations Morning Leadership Call			
N/A			
Instructions for Responsible Manager			
Evaluate suggestion, enter comments and required actions on PIE/CIM tab of the PER. Disposition in accordance with TFC-ESHQ-Q_C-C-01, Problem Evaluation Request.			
Senior Management	**Sr Mgmt ID**	**Sr Mgmt Phone**	**Sr Mgmt Review Date**
Brown, Nancy L	H0088797	(509) 373-0992	03/27/2009
CAUSE ANALYSIS			
Description of Occurrence			

Extent of Condition
Safety Significance
Generic Implications
Remedial Corrective Action
Causal Analysis, Apparent Cause and/or Root Cause Analysis
PIE/CIM
Evaluation of PIE/CIM Initiative
Work platform was installed o 03/25/2009. No further action is required.
ATTACHMENTS
Link to PER
WRPS-PER-2009-0466 Originator Feedback.pdf

AUDIT HISTORY

Change Date	Auditor	Comments
03/27/2009 09:01	Brown, Nancy L	Responsible Manager Task Launched by Brown, Nancy L
05/04/2009 07:50	Brown, Nancy L	'Selected Work Processes' have changed.

-- End of Report --
07/09/2009 11:02 AM

Task# WRPS-PER-2009-0466

E-STARS[R] Report
Task Detail Report
07/09/2009 1103

TASK INFORMATION			
Task#	WRPS-PER-2009-0466		
Subject	PIE; HPT surveys in AN Farm		
Parent Task#		**Status**	Open
Reference		**Due**	05/24/2009
Originator	^PER Coordinator	**Priority**	Medium
Originator Phone		**Category**	PER
Origination Date	03/25/2009 1344	**Generic1**	None
Remote Task#		**Generic2**	None
Deliverable	PER Review	**Generic3**	None
Class	None	**View Permissions**	Global
Instructions	*No Instructions*		

ROUTING LISTS

1	Responsible Manager	Active
	Evaluate suggestion, enter comments and required actions on PIE/CIM tab of the PER. Disposition in accordance with TFC-ESHQ-Q_C-C-01, Problem Evaluation Request.	
	• Hopkins, Gary P - Assign - Completed with comments - 05/28/2009 0902 *Instructions:*	
	• Hopkins, Gary P - Assign - Completed with comments - 05/28/2009 0903 *Instructions:* Did you contact the originator about the PER? Document your contact in the response window.	
2	Review Initial PER	Inactive
	Review New PER	
	• ^SO(Johnson, Brian A) - Review - Concur - 03/25/2009 1416 *Instructions:*	
	• ^PER Screening(Brown, Nancy L) - Review - Concur - 03/26/2009 1328 *Instructions:*	
	• ^Mgr Review - Review - Cancelled - 03/27/2009 0901 *Instructions:*	

ATTACHMENTS

Attachments	1. Link to PER 2. WRPS-PER-2009-0466 Originator Feedback.pdf

COMMENTS

Poster	Hopkins, Gary P (Jones, Terry) - 05/28/2009 0902
	Completed
	Statement entered on PIE/CIM tab of PER. No further action is required. This action completes this task and PER.
Poster	Hopkins, Gary P (Jones, Terry) - 05/28/2009 0903
	Completed

Task# WRPS-PER-2009-0466

	PER originator contacted. Attached file, WRPS-PER-2009-0466 Originator Feedback.pdf, is electronic documentation of feedback to PER originator.		
TASK DUE DATE HISTORY			
Modified	03/27/2009 0901 - ^PER Coordinator	**New Due Date**	05/24/2009 1630
Modified	03/27/2009 0901 - ^PER Coordinator	**New Due Date**	05/24/2009 1630
Modified	03/25/2009 1344 - ^PER Coordinator	**New Due Date**	03/27/2009 1630
SUB TASK HISTORY			
No Subtasks			

-- end of report --

Jones, Teresa E (Terry)

From: Jones, Teresa E (Terry)
Sent: Thursday, May 28, 2009 9:00 AM
To: Arave, Douglas H
Cc: Jones, Teresa E (Terry)
Subject: Feedback on WRPS-PER-2009-0466
Attachments: WRPS-PER-2009-0466.htm

Doug,

Feedback on the above PER as you requested.

Terry

Save

Problem Evaluation Request (PER)

WRPS-PER-2009-0471
In Process/Work

PER No	Date of Discovery	Time of Discovery (24:00)	Project
WRPS-PER-2009-0471	03/25/2009	11:30	Base Ops

Location

242A

How Was Problem Discovered

DOE-ORP

Description of Concern or Problem

On 3/24/09 while performing procedure TO-630-001 to obtain evaporator slurry samples troubleshooting was performed outside of the bounds of the procedure without a troubleshooting plan. When the SM recognized that they were performing work outside the bounds of the procedure the work was stopped, a work package was obtained to change the filter in the water system and slurry sampling was scheduled for the next day. On 3/25/09 while performing TO-630-001 work steps in the procedure were performed out of sequence.

The Facility Representative (Brandon Williamson) notice the operation of a valve in section 5.3 that should have been performed in section 5.1. Facility Representative notified the SSW and work was stopped.

Requirements:
DOE Order 5480.19, Chapter 2, "Shift Routines And Operating Practices", as implemented by TFC-PLN-05 (Conduct of Operations Matrix) by TFC-OPS-OPER-C-08, "Shift Routines And Operating Practices"

Requirement Not Satisfied	Source Document Number
Conduct of Operation/Procedure Compliance	
Equipment Identification Number	**System Identification**

Immediate actions Taken or Planned

Fact Finding was held on 3/25/09 at approximately 1530.

Recommended Corrective actions

Originator Contact

No

Originators Name	Originators ID	Originators Phone	Date Initiated
Badden, Jim J	H0078847	(509) 373-1655	03/27/2009

SHIFT OPERATIONS REVIEW

Title

Less than Adequate Conduct of Operations at 242-A

How Discovered	Agency
self-ID prior to event	

Reportability	SSC Operability	Operability Review	Comp Measures Req
SC-4	N/A	N/A	

Describe actions Taken or Recommended

Red Arrow logbook entry on 03/26/09 @ 1331, "Do not Remove Admin Locks from AW-102 Feed Pump and PB-2 pump until Authorized to Restart by Scott Sax. On 03/27/09 @ 1635 categorized Occurrence, 10 (C) SC-4, Management Concern.

SO Reviewer Name	SO Reviewer ID	SO Reviewer Phone	SO Review Date
Higham, Dale B	H0078950	(509) 373-2689	03/28/2009

SCREENING

PER Significance Level	
PER with Resolution	

Independent Assessment Review	Occurrence Report Number	Externally Identified	
Yes	EM-RP--WRPS-TANKFARM-2009-0005	Yes	
Assigned Responsible Manager	**Facilities Rep / SSO**	**Safety Management Rep**	
Raven, Rebecca P	Williamson, Brandon I	Owen, Peter	
Program		**Safety Management Program**	
• N/A		• Conduct of Operations	

PER Screening Comments

PER w/ Res with formal Apparent Cause Analysis. Procedure non-compliance. Occurence Report number and Fac Rep name will be added when available.
Please attach completed Fact Finding to the PER.
(Nancy Brown 03/30/09)

Occurrence Report Number added to PER -- EM-RP--WRPS-TANKFARM-2009-0005. Fac Rep name added (Brandon Williamson).
(Nancy Brown 03/31/09)

Causal Code

A2B4C07	Equipment/Material Problem Material Control Marking/labeling
A3B1C03	Human Performance LTA Skill Based Error Incorrect performance due to mental lapse
A3B2C04	Human Performance LTA Rule Based Error Previous success in use of rule reinforced continued use of rule
A3B2C01	Human Performance LTA Rule Based Error Strong rule incorrectly chosen over other rules
A3B2C02	Human Performance LTA Rule Based Error Signs to stop were ignored and step performed incorrectly
A3B2C03	Human Performance LTA Rule Based Error Too much activity was occurring and error made in problem solving
A3B3C03	Human Performance LTA Knowledge Based Error Individual justified action by focusing on biased evidence
A3B3C05	Human Performance LTA Knowledge Based Error Incorrect assumption that a correlation existed between two or more facts
A4B1C04	Management Problem Management Methods LTA Management follow-up or monitoring of activities did not identify problems
A6B3C04	Training Deficiency Training Material LTA Performance standards

MGT/Comm/Train	Human Performance	GEMS	Equip/Eng/Other
Failed Barrier	**ORPS Code**	**Functional Area**	**Work Process**
	Potential Concerns/Issues	Operations	• Control of Equipment and System Status • Event Investigation
ISMS	**Consequence Code**		
	• Procedure - Technical - Procedure ambiguous,		

Perform work within the controls	in error, could not be worked, was not used • Stop Work Authority - Employee "Stop Work Authority" used because of actual or potential unsafe conditions.		
PER Screening Chair	**PER Screening Chair ID**	**PER Screening Chair Phone**	**PER Screening Date**
Brown, Nancy L	H0088797	(509) 373-0992	03/30/2009

PAAA REVIEW

PAAA Screening	**PAAA Codes**	**Function Codes**	
PAAA, Non-NTS Reportable	• 10 CFR 830.122 (e)(1) • 10 CFR 830.122 (e)(2)	• Conduct of Operations (including Drills and Exercises) • Configuration Management	
NTS Report Number	**NTS Report Date**		
Repetitive / Recurrent	**Programmatic**	**Intentional Violation / Misrepresentation**	
No	No	No	

PAAA Screening Comments

PAAA Reviewer Name	**PAAA Review Date**	
Waters, Shaun F	03/30/2009	
PAAA Approver Name	**PAAA Approve Date**	
Anderson, Craig E	04/01/2009	

CAUSE ANALYSIS

Description of Occurrence

On 3/24/09 while performing procedure TO-630-001 to obtain evaporator slurry samples troubleshooting was performed outside of the bounds of the procedure without a troubleshooting plan. When the SM recognized that they were performing work outside the bounds of the procedure the work was stopped, a work package was obtained to change the filter in the water system and slurry sampling was scheduled for the next day. On 3/25/09 while performing TO-630-001 work steps in the procedure were performed out of sequence.

The Facility Representative (Brandon Williamson) notice the operation of a valve in section 5.3 that should have been performed in section 5.1. Facility Representative notified the SSW and work was stopped.

Requirements:
DOE Order 5480.19, Chapter 2, "Shift Routines And Operating Practices", as implemented by TFC-PLN-05 (Conduct of Operations Matrix) by TFC-OPS-OPER-C-08, "Shift Routines And Operating Practices"

Extent of Condition

None, although some overarching issues may emerge as a part of the Common Cause Analysis being prepared as a part of this effort.

Safety Significance

Anytime a procedure is violated, ththe potential exists for being outside the nuclear and industrial safety envelope. This was not the case in this event.

Generic Implications

Remedial Corrective Action

See attached CAP. Outstanding CAs are being assigned below. Engineering issues with respect to the SEL are being tracked as a part of an Engineering CAP and are not repeated here for assignment.

Additionally, a Common Cause Analysis for similar events including 244-CR, C-109 and S-102 with the focus on Conduct of Operations related causes and corrective actions was performed (NJ Milliken/see attached). The CCA resulted in the generation of one additional corrective action focused on improving conduct of operations.

Causal Analysis, Apparent Cause and/or Root Cause Analysis

See attached Aparrent Cause Analysis with Causal Codes and Why Analysis.

CORRECTIVE ACTIONS

Actionee	Action Due Date	E-STARS Number
Reynolds, Tammy R	09/30/2009	WRPS-PER-2009-0471.1

Action

Develop initial Conduct of Operations Improvement Plan designed to implement improvement initiatives identified in Common Cause Analysis for ConOPS focus areas.

Deliverable: Approved Conduct of Operations Improvement Plan and schedule

Corrective Action Attachments

- 242A Apparent Cause Analysis 040109.docx
- CCA WRPS-PER-2009-0471.pdf
- EIR-2009-007
- EM-RP--WRPS-TANKFARM-2009-0005.htm
- Link to PER
- PER EXTENSION REQUEST.msg
- PER-2009-0471 CAP with April 4 2009 Input.docx
- RE_ WRPS-PER-2009-0471_ Returned for Rework - Complete Apparent Cause process and documentation.msg
- RE_.msg
- TOD Weekly for the Week of 3-23-09.doc
- Why Analysis for PER-2009-0471.pdf

Actionee	Action Due Date	E-STARS Number
Brosee, Neil	08/31/2009	WRPS-PER-2009-0471.2

Action

Conduct follow-on Conduct of Operations Briefings for additional WRPS management, including first line management in field activities such as Radiological control, Operations, Engineering, Industrial Hygiene and Maintenance.

Deliverable: Copy of Briefing and Attendance Rosters

Corrective Action Attachments

- 242A Apparent Cause Analysis 040109.docx
- CCA WRPS-PER-2009-0471.pdf
- EIR-2009-007
- EM-RP--WRPS-TANKFARM-2009-0005.htm
- Link to PER
- PER extension.msg
- PER-2009-0471 CAP with April 4 2009 Input.docx
- RE_ PER extension.msg
- RE_ WRPS-PER-2009-0471_ Returned for Rework - Complete Apparent Cause process and documentation.msg
- RE_ WRPS-PER-2009-0471_2 CA Extension.msg
- RE_.msg
- TOD Weekly for the Week of 3-23-09.doc
- Why Analysis for PER-2009-0471.pdf

Actionee	Action Due Date	E-STARS Number
Wagner, Vikki	08/30/2009	WRPS-PER-2009-0471.3

Action

Prepare Campaign 09-01/09-02 lessons learned.

deliverable: Lessons Learned Report

Corrective Action Attachments

- 242A Apparent Cause Analysis 040109.docx
- CCA WRPS-PER-2009-0471.pdf
- EIR-2009-007
- EM-RP--WRPS-TANKFARM-2009-0005.htm
- Link to PER
- PER-2009-0471 CAP with April 4 2009 Input.docx
- RE_ WRPS-PER-2009-0471_ Returned for Rework - Complete Apparent Cause process and documentation.msg
- TOD Weekly for the Week of 3-23-09.doc
- Why Analysis for PER-2009-0471.pdf

Actionee	Action Due Date	E-STARS Number
Raven, Rebecca P	09/30/2009	WRPS-PER-2009-0471.4

Action

Complete Extent of Conditions Reviews for less-frequently used 242-A Evaporator procedures.

Deliverable: List of procedures evaluated, review results and actions taken.

Corrective Action Attachments

- 242A Apparent Cause Analysis 040109.docx
- CCA WRPS-PER-2009-0471.pdf
- EIR-2009-007
- EM-RP--WRPS-TANKFARM-2009-0005.htm
- Link to PER
- PER-2009-0471 CAP with April 4 2009 Input.docx
- RE_ WRPS-PER-2009-0471_ Returned for Rework - Complete Apparent Cause process and documentation.msg
- TOD Weekly for the Week of 3-23-09.doc
- Why Analysis for PER-2009-0471.pdf

Actionee	Action Due Date	E-STARS Number
Cuneo, Joseph R	09/30/2009	WRPS-PER-2009-0471.5

Action

Incorporate Campaign 09-01/09-02 lessons learned into 242-A training curriculum, including class room training, and qualification/OJT cards for 242-A NCO and Shift Managers. The input will be the LL from VL Wagner.

Deliverable: Written sumary of review results, and actions taken. Revised training materials.

Corrective Action Attachments

- 242A Apparent Cause Analysis 040109.docx
- CCA WRPS-PER-2009-0471.pdf
- EIR-2009-007
- EM-RP--WRPS-TANKFARM-2009-0005.htm
- Link to PER
- PER-2009-0471 CAP with April 4 2009 Input.docx
- RE_ WRPS-PER-2009-0471_ Returned for Rework - Complete Apparent Cause process and documentation.msg
- TOD Weekly for the Week of 3-23-09.doc
- Why Analysis for PER-2009-0471.pdf

Actionee	Action Due Date	E-STARS Number
Raven, Rebecca P	09/30/2009	WRPS-PER-2009-0471.6

Action

Evaluate 242-A Operating procedures and prepare plan for restructuring based on this event and lessons learned derived from other corrective actions.

Deliverable: Approved 242-A Procedure Improvement Plan and schedule

Corrective Action Attachments

- 242A Apparent Cause Analysis 040109.docx
- CCA WRPS-PER-2009-0471.pdf
- EIR-2009-007
- EM-RP--WRPS-TANKFARM-2009-0005.htm
- Link to PER
- PER-2009-0471 CAP with April 4 2009 Input.docx
- RE_ WRPS-PER-2009-0471_ Returned for Rework - Complete Apparent Cause process and documentation.msg
- TOD Weekly for the Week of 3-23-09.doc
- Why Analysis for PER-2009-0471.pdf

Actionee	Action Due Date	E-STARS Number
Winkelman, Wayne D	09/30/2009	WRPS-PER-2009-0471.7

Action

Remove legacy alarms from 242-A MCS

Deliverable: Work completed ECNs

Corrective Action Attachments

- 242A Apparent Cause Analysis 040109.docx
- CCA WRPS-PER-2009-0471.pdf
- EIR-2009-007
- EM-RP--WRPS-TANKFARM-2009-0005.htm
- Link to PER
- PER-2009-0471 CAP with April 4 2009 Input.docx
- RE_ WRPS-PER-2009-0471_ Returned for Rework - Complete Apparent Cause process and documentation.msg

- TOD Weekly for the Week of 3-23-09.doc
- Why Analysis for PER-2009-0471.pdf

Actionee	Action Due Date	E-STARS Number
Raven, Rebecca P	09/30/2009	WRPS-PER-2009-0471.8

Action

Evaluate human factors elements of the "at controls" area. Lighting, ergonomic stations, and noise levels need to be addressed as a minimum.

Deliverable: Written summary of evaluation results, and recommended actions. Tracking mechanism for recommendations.

Corrective Action Attachments

- 242A Apparent Cause Analysis 040109.docx
- CCA WRPS-PER-2009-0471.pdf
- EIR-2009-007
- EM-RP--WRPS-TANKFARM-2009-0005.htm
- Link to PER
- PER-2009-0471 CAP with April 4 2009 Input.docx
- RE_ WRPS-PER-2009-0471_ Returned for Rework - Complete Apparent Cause process and documentation.msg
- TOD Weekly for the Week of 3-23-09.doc
- Why Analysis for PER-2009-0471.pdf

Actionee	Action Due Date	E-STARS Number
Roberts, Mark A	09/30/2009	WRPS-PER-2009-0471.9

Action

Revise format requirements for Technical Evaluations to explicitly identify enabling assumptions.

Deliverable: Revise TFC-ENG-FACSUP-C-02, Operability/Technical Evaluations

Corrective Action Attachments

- 242A Apparent Cause Analysis 040109.docx
- CCA WRPS-PER-2009-0471.pdf
- EIR-2009-007
- EM-RP--WRPS-TANKFARM-2009-0005.htm
- Link to PER
- PER-2009-0471 CAP with April 4 2009 Input.docx
- RE_ WRPS-PER-2009-0471_ Returned for Rework - Complete Apparent Cause process and documentation.msg
- TOD Weekly for the Week of 3-23-09.doc
- Why Analysis for PER-2009-0471.pdf

Actionee	Action Due Date	E-STARS Number
Gregory, Rob	08/31/2009	WRPS-PER-2009-0471.10

Action

Common Cause Analysis identified corrective action CA-01:

Assemble a worker-level team to evaluate the active human errors (event "triggers") associated with the events described in CCA report for LTA Conduct of Operations at 242-A. Include an evaluation of "last-line-of-defense" tools/techniques used to prevent active human errors. Provide recommendations to the Conduct of Operations Council on tools, techniques, etc. that, if strengthened or implemented, will aid in the prevention of future similar events.

The team should include a cross-organizational representation of Bargaining Unit personnel, First Line Managers, and Operations Engineers.

Deliverable: Summary of suggestions/discussion topics. Evidence of transmittal to Conduct of Operations council.

Corrective Action Attachments

- 242A Apparent Cause Analysis 040109.docx
- CCA WRPS-PER-2009-0471.pdf
- EIR-2009-007
- EM-RP--WRPS-TANKFARM-2009-0005.htm
- FW_ Corrective Action Extension.msg
- Link to PER
- PER extensions.msg
- PER-2009-0471 CAP with April 4 2009 Input.docx
- RE_ PER extensions.msg
- RE_ WRPS-PER-2009-0471_ Returned for Rework - Complete Apparent Cause process and documentation.msg
- RE_.msg
- TOD Weekly for the Week of 3-23-09.doc
- Why Analysis for PER-2009-0471.pdf

ATTACHMENTS
242A Apparent Cause Analysis 040109.docx
CCA WRPS-PER-2009-0471.pdf
EIR-2009-007
EM-RP--WRPS-TANKFARM-2009-0005.htm
Link to PER
PER-2009-0471 CAP with April 4 2009 Input.docx
RE_ WRPS-PER-2009-0471_ Returned for Rework - Complete Apparent Cause process and documentation.msg
TOD Weekly for the Week of 3-23-09.doc
Why Analysis for PER-2009-0471.pdf

AUDIT HISTORY

Change Date	Auditor	Comments
03/30/2009 16:09	Brown, Nancy L	'Facilities Representative' was changed.
03/31/2009 08:18	Brown, Nancy L	Responsible Manager Task Launched by Brown, Nancy L
03/31/2009 10:47	Brown, Nancy L	'PER Screening Comments' was changed. 'Occurrence Report' was changed.
04/07/2009 15:51	Brown, Nancy L	'Description of Concern or Problem' was changed at the request of Greg Hanson
05/26/2009 07:25	Owen, Annette	'Safety Significance' was changed. 'Remedial Corrective Action' was changed.
06/16/2009 09:42	Raven, Rebecca P	'Safety Significance' was changed. 'Causal Analysis' was changed.
06/18/2009 08:32	Mata, Beth L	Change to Cause Analysis screen/Corrective Action plan.
06/18/2009 08:37	Mata, Beth L	Change to Cause Analysis screen/Corrective Action plan.
06/18/2009 11:01	Glaman, Linda R	Change to Cause Analysis screen/Corrective Action plan.
06/23/2009 14:25	Glaman, Linda R	Corrective actions Launched by Glaman, Linda R
07/07/2009 08:07	Glaman, Linda R	Change to Cause Analysis screen/Corrective Action plan.
07/07/2009 08:08	Glaman, Linda R	extend CA .2 to 7-17-09 per attached email request. LBG 7-7-09 Extend to: 7/17/09 Justification: In response to the ISMS Phase II Readiness assessment results, it is requested this briefing be postponed to allow inclusion of additional topics identified during ISMS Phase II review. The briefing material/subjects will be combined to allow facilitation of one briefing rather than two separate briefings. (Action is assigned to MN Brosee) B Mata for MN Borsee, approvedd R Raven 7-2-09
07/15/2009 14:18	Owen, Annette	Change to Cause Analysis screen/Corrective Action plan.
07/15/2009 14:19	Owen, Annette	Extend CA 10 per request. : A Facilitator has been contracted to lead the worker-level team. The team is scheduled to meet on 7/23 and the results will be documented in a report the following week. Extend to 7/30 to allow team meeting and results compilation.B Mata for R Raven
07/15/2009 14:41	Owen, Annette	Change to Cause Analysis screen/Corrective Action plan.
07/15/2009 14:41	Owen, Annette	Corrective Action item - modification to synchronize with E-STARS.'Action Due Date' was changed.
07/16/2009 07:32	Owen, Annette	Change to Cause Analysis screen/Corrective Action plan.
07/16/2009 07:34	Owen, Annette	Extend CA 2 to 7/31/09. Additional time is required to complete the subject briefings. Additional time will allow disbursement to

		rotating shifts. (blm for mnb)/FacRep B Williamson concurs
07/23/2009 11:01	Glaman, Linda R	Change to Cause Analysis screen/Corrective Action plan.
07/31/2009 08:54	Owen, Annette	Change to Cause Analysis screen/Corrective Action plan.
07/31/2009 11:20	Owen, Annette	Change to Cause Analysis screen/Corrective Action plan.
07/31/2009 11:21	Owen, Annette	Extend CA .10 to 8/31/09. Higher priority issues have overtaken completion of this action. A Owen for R Raven
07/31/2009 11:22	Owen, Annette	Extend CA .2 to 8/31/09. Higher priority issues have overtaken completion of this action. A Owen for R Raven
07/31/2009 11:23	Owen, Annette	Extend CA .1 to 9/30/09. Higher priority issues have overtaken completion of this action. FacRep concurs w/extending. A Owen for R Raven

-- End of Report --
08/06/2009 10:09 AM

Task# WRPS-PER-2009-0471

E-STARS[R] Report
Task Detail Report
08/06/2009 1016

TASK INFORMATION			
Task#	WRPS-PER-2009-0471		
Subject	RES; Less than Adequate Conduct of Operations at 242-A		
Parent Task#		**Status**	Open
Reference		**Due**	11/02/2009
Originator	^PER Coordinator	**Priority**	Medium
Originator Phone		**Category**	PER
Origination Date	03/27/2009 0651	**Generic1**	None
Remote Task#		**Generic2**	None
Deliverable	PER Review	**Generic3**	None
Class	None	**View Permissions**	Global
Instructions	*No Instructions*		

ROUTING LISTS

1	Corrective actions Routing Lis	Active
	To launch Corrective actions.	
	• ^PER CAs - Assign - Awaiting Response - Due Date - 10/15/2009 0000 *Instructions:*	
	• Owen, Peter - Review - Withdrawn - 06/23/2009 1431 *Instructions:*	
	• Reynolds, Tammy R - Review - Awaiting Response - Due Date - 10/19/2009 0000 *Instructions:*	
	• Williamson, Brandon I - Review - Awaiting Response - Due Date - 11/02/2009 0000 *Instructions:*	
2	Responsible Manager	Inactive

Returned for Rework: Complete Apparent Cause process and documentation

The screening team determined a formal apparent cause analysis needs to be performed for the resolution of this PER. The attachment "242A Apparent Cause Analysis 040109.docx" provides a detailed time line of the incidents leading to the initiation of the PER, but does not satisfy the formal apparent cause analysis requirement.
**Document the evaluation of this via a formal apparent cause analysis method and provide the resulting analysis either as an attachment or additional entry into the apparent cause analysis field.
**Upon completion of the formal Apparent Cause Analysis, enter the identified cause codes into the Causal Code field on the PER.
**A summary of the identified cause(s), linking them to the cause codes and corrective actions needs to be entered into the Causal Analysis,Apparent Cause and/or Root Cause Analysis field of the PER.

The current Safety Significance states that there are no TSR violations, however does not address the actual or potential impacts of the event to employee safety, the environment or equipment.
**Provide the actual or potential impacts of the event to employee safety, the environment or equipment.

The Remedial Corrective Action entry references the attached CAP and states unfinished actions assigned below. It also states that Engineering issues are being tracked as part of an

Task# WRPS-PER-2009-0471

	Engineering CAP. **Document the completed actions, who completed the action and when the action was completed and attach evidence of completion for each action that was finished during PER resolution. **If the Engineering CAP is being documented via another PER, provide the additional PER's number. **If the Engineering CAP is not being documented via another PER, and the actions are in response to this ORP identified issue; these actions need to be documented in this PER. The completed ones should be entered as Remedial Actions the same as the completed actions for the currently addressed CAP and the uncompleted actions need to be added as corrective actions. Notes on Corrective Actions: -The first action to Nancy Milliken to perform a Common Cause Analysis: Any corrective actions identified as a result of this Analysis needs to be either tracked as additional corrective actions to this PER or tracked as new PERs. -The first action to Vikki Wagner to develop a lessons learned: Should include instructions to issue the lessons learned and require a listing of the recipients of the lessons learned. -The action to Rebecca Raven to evaluate human factors: The tracking mechanism for recommendations need to be tracked and documented so it is retrievable with this PER.	
	• Raven, Rebecca P - Assign - Completed with comments - 05/11/2009 1506 *Instructions:*	
	• ^Independent Assessment Review(Penick, Lee R) - Review - Concur - 05/12/2009 1534 *Instructions:* Independent Assessor Review	
	• Owen, Peter - Review - Concur with comments - 05/13/2009 1054 *Instructions:* Safety Management Representative Review	
	• Raven, Rebecca P - Assign - Completed with comments - 06/16/2009 0945 *Instructions:*	
3	Review Initial PER	Inactive
	Review New PER	
	• ^SO(Higham, Dale B) - Review - Concur - 03/28/2009 0234 *Instructions:*	
	• ^PER Screening(Brown, Nancy L) - Review - Concur - 03/30/2009 1350 *Instructions:*	
	• ^Mgr Review - Review - Cancelled - 03/31/2009 0818 *Instructions:*	

ATTACHMENTS

Attachments	1. 242A Apparent Cause Analysis 040109.docx 2. CCA WRPS-PER-2009-0471.pdf 3. EIR-2009-007 4. EM-RP--WRPS-TANKFARM-2009-0005.htm 5. Link to PER 6. PER-2009-0471 CAP with April 4 2009 Input.docx 7. RE_ WRPS-PER-2009-0471_ Returned for Rework - Complete Apparent Cause process and documentation.msg 8. TOD Weekly for the Week of 3-23-09.doc 9. Why Analysis for PER-2009-0471.pdf

COMMENTS

Poster	Raven, Rebecca P - 05/11/2009 1506
	Completed
	Please launch corrective actions.
Poster	Owen, Peter - 05/13/2009 1054
	Owen, Pete -- Concur

Task# WRPS-PER-2009-0471	
	I concur with the evaluation and documentation submitted for closure of this activity. Pete Owen Manager, Shift Operations
Poster	^PER Coordinator (Glaman, Linda R) - 05/18/2009 1455
	Returned for Rework
	Returned for Rework: Complete Apparent Cause process and documentation The screening team determined a formal apparent cause analysis needs to be performed for the resolution of this PER. The attachment "242A Apparent Cause Analysis 040109.docx" provides a detailed time line of the incidents leading to the initiation of the PER, but does not satisfy the formal apparent cause analysis requirement. **Document the evaluation of this via a formal apparent cause analysis method and provide the resulting analysis either as an attachment or additional entry into the apparent cause analysis field. **Upon completion of the formal Apparent Cause Analysis, enter the identified cause codes into the Causal Code field on the PER. **A summary of the identified cause(s), linking them to the cause codes and corrective actions needs to be entered into the Causal Analysis,Apparent Cause and/or Root Cause Analysis field of the PER. The current Safety Significance states that there are no TSR violations, however does not address the actual or potential impacts of the event to employee safety, the environment or equipment. **Provide the actual or potential impacts of the event to employee safety, the environment or equipment. The Remedial Corrective Action entry references the attached CAP and states unfinished actions assigned below. It also states that Engineering issues are being tracked as part of an Engineering CAP. **Document the completed actions, who completed the action and when the action was completed and attach evidence of completion for each action that was finished during PER resolution. **If the Engineering CAP is being documented via another PER, provide the additional PER's number. **If the Engineering CAP is not being documented via another PER, and the actions are in response to this ORP identified issue; these actions need to be documented in this PER. The completed ones should be entered as Remedial Actions the same as the completed actions for the currently addressed CAP and the uncompleted actions need to be added as corrective actions. Notes on Corrective Actions: -The first action to Nancy Milliken to perform a Common Cause Analysis: Any corrective actions identified as a result of this Analysis needs to be either tracked as additional corrective actions to this PER or tracked as new PERs. -The first action to Vikki Wagner to develop a lessons learned: Should include instructions to issue the lessons learned and require a listing of the recipients of the lessons learned. -The action to Rebecca Raven to evaluate human factors: The tracking mechanism for recommendations need to be tracked and documented so it is retrievable with this PER. L Glaman
Poster	Raven, Rebecca P - 06/16/2009 0934
	Apparent cause analysis attached.
	Attached as a .pdf.
Poster	Raven, Rebecca P - 06/16/2009 0935
	Causal Codes Populated.
	The causal codes from the ACA have been poulated in the PER field.
Poster	Raven, Rebecca P - 06/16/2009 0936
	Safety Significance Field Updated.

Task# WRPS-PER-2009-0471	
	New verbiage added to clarify Safety Significance.
Poster	Raven, Rebecca P - 06/16/2009 0938
	Engineering Actions Tracking Issues
	As discussed in the attached CAP, the Engineering issues are being tracked separately. Commercial Grade Item Dedication: In addition, WRPS has arranged for Sequoia Consulting group to review our Commercial Grade Item Dedication (CGD) procedure and process to suggest modifications and establish a training course for WRPS staff. Additional actions are identified in the Corrective Action Plan (CAP) for the CGD process. This CAP is currently being revised to implement additional actions in response to ORP surveillance report 09-ESQ-114 and the actions are being tracked separately. Safety Equipment List (SEL): Interoffice memorandums WRPS-0900387, "Review of SS Components Installed After January 18, 2009" and WRPS-0900485, "Update - Review of SS Components Installed After January 18, 2009" detail the review of SS components installed since the Justification for Continued Operation. The CGI documentation generated meets the requirements of TFC-ENG-DESIGN-C-15 and TFC-MD-062. Additional actions include correction of the CHAMPS database as identified in the Corrective Action Plan for Maintenance Programs being developed in response to ORP assessment A-09-AMENS-TANKFARM-001, and implementation of the DOE STD 3009 CN-3 and CGD upgrade processes which will include revising the SEL and reconciling the CHAMPS database to the SEL. These actions will be tracked separately.
Poster	Raven, Rebecca P - 06/16/2009 0939
	Response to Notes on Corrective Actions
	Thanks.
Poster	Raven, Rebecca P - 06/16/2009 0945
	Completed
	Please launch corrective actions. I have made added a comment for each issue on the rework requested. The ACA and CAP have been previously submitted and accepted by ORP and no changes are possible. If there is a problem with the closure of this PER and the launch of the corrective actions I expect to be given the courtesy of a phone call so these issues can be discussed personally rather than just trashing the work without understanding it. I can be reached at 438-2821 24/7 every hour of every day...
Poster	^PER Coordinator (Glaman, Linda R) - 06/18/2009 1214
	Resolution Accepted As-Is and Corrective Actions launched. LBG 6-18-09
	As directed by the Corrective Action Management manager (See attached email RE: WRPS-PER-2009-0471...), the PER resolution was accepted as written with the following note: I performed my standard review against the PER and ACA procedure and process requirements and expectations. The resolution still does not meet these requirements and expectations. The results of the re-review are as follows... The formal apparent cause analysis provided now is a two-step Why with no summary tying it to the 10 cause codes identified or 10 corrective actions initiated. The safety significance still only addresses the "nuclear and industrial safety envelope" not the impact of the problem on employee safety and health, the environment or equipment as required by the procedure. The Remedial Corrective Action entry still states that "Engineering issues with respect to the SEL are being tracked as part of an engineering CAP..." there is still no reference to how and/or where these actions are being tracked, what the actions are or who is doing them - None of which is a Remedial Action. All this information should be entered with the Apparent

Task# WRPS-PER-2009-0471

	Cause Analysis summary. L Glaman				
TASK DUE DATE HISTORY					
Modified	06/23/2009 1425 - ^PER Coordinator			**New Due Date**	11/02/2009 0000
Modified	03/31/2009 0818 - ^PER Coordinator			**New Due Date**	05/11/2009 1630
Modified	03/31/2009 0818 - ^PER Coordinator			**New Due Date**	05/19/2009 1630
Modified	03/27/2009 0651 - ^PER Coordinator			**New Due Date**	03/29/2009 1630
SUB TASK HISTORY					
Subtask#	WRPS-PER-2009-0471.1				
Subject	WRPS-PER-2009-0471; RES; Develop initial Conduct of Operations Improvement Plan designed to impleme				
Originator	^PER CAs				
	Routing List	Corrective Action			
		Assignee	Reynolds, Tammy R	**Response**	
		Assignee	Raven, Rebecca P	**Response**	
		Assignee	^Independent Assessment Review	**Response**	
Subtask#	WRPS-PER-2009-0471.2				
Subject	WRPS-PER-2009-0471; RES; Conduct follow-on Conduct of Operations Briefings for additional WRPS manag				
Originator	^PER CAs				
	Routing List	Corrective Action			
		Assignee	Brosee, Neil	**Response**	
		Assignee	Raven, Rebecca P	**Response**	
		Assignee	^Independent Assessment Review	**Response**	
Subtask#	WRPS-PER-2009-0471.3				
Subject	WRPS-PER-2009-0471; RES; Prepare Campaign 09-01/09-02 lessons learned. deliverable: Lessons Learned Report				
Originator	^PER CAs				
	Routing List	Corrective Action			
		Assignee	Wagner, Vikki	**Response**	
		Assignee	Raven, Rebecca P	**Response**	
		Assignee	^Independent Assessment Review	**Response**	
Subtask#	WRPS-PER-2009-0471.4				
Subject	WRPS-PER-2009-0471; RES; Complete Extent of Conditions Reviews for less-frequently used 242-A Evaporator procedures. Deliverable: List of procedur				
Originator	^PER CAs				
	Routing List	Corrective Action			
		Assignee	Raven, Rebecca P	**Response**	

Task# WRPS-PER-2009-0471					
		Assignee	^Independent Assessment Review	**Response**	
Subtask#	WRPS-PER-2009-0471.5				
Subject	WRPS-PER-2009-0471; RES; Incorporate Campaign 09-01/09-02 lessons learned into 242-A training curriculum, including class room training, and qualifica				
Originator	^PER CAs				
	Routing List	Corrective Action			
		Assignee	Cuneo, Joseph R	**Response**	
		Assignee	Raven, Rebecca P	**Response**	
		Assignee	^Independent Assessment Review	**Response**	
Subtask#	WRPS-PER-2009-0471.6				
Subject	WRPS-PER-2009-0471; RES; Evaluate 242-A Operating procedures and prepare plan for restructuring based on this event and lessons learned derived from o				
Originator	^PER CAs				
	Routing List	Corrective Action			
		Assignee	Raven, Rebecca P	**Response**	
		Assignee	^Independent Assessment Review	**Response**	
Subtask#	WRPS-PER-2009-0471.7				
Subject	WRPS-PER-2009-0471; RES; Remove legacy alarms from 242-A MCS Deliverable: Work completed ECNs				
Originator	^PER CAs				
	Routing List	Corrective Action			
		Assignee	Winkelman, Wayne D	**Response**	
		Assignee	Raven, Rebecca P	**Response**	
		Assignee	^Independent Assessment Review	**Response**	
Subtask#	WRPS-PER-2009-0471.8				
Subject	WRPS-PER-2009-0471; RES; Evaluate human factors elements of the "at controls" area. Lighting, ergonomic stations, and noise levels need to be				
Originator	^PER CAs				
	Routing List	Corrective Action			
		Assignee	Raven, Rebecca P	**Response**	
		Assignee	^Independent Assessment Review	**Response**	
Subtask#	WRPS-PER-2009-0471.9				
Subject	WRPS-PER-2009-0471; RES; Revise format requirements for Technical Evaluations to explicitly identify enabling assumptions. Deliverable: Revise TFC				
Originator	^PER CAs				
	Routing List	Corrective Action			
		Assignee	Roberts, Mark A	**Response**	

Task# WRPS-PER-2009-0471					
		Assignee	Raven, Rebecca P	**Response**	
		Assignee	^Independent Assessment Review	**Response**	
Subtask#	WRPS-PER-2009-0471.10				
Subject	WRPS-PER-2009-0471; RES; Common Cause Analysis identified corrective action CA-01: Assemble a w				
Originator	^PER CAs				
	Routing List	Corrective Action			
		Assignee	Gregory, Rob	**Response**	
		Assignee	Raven, Rebecca P	**Response**	
		Assignee	^Independent Assessment Review	**Response**	

-- end of report --

242-A Procedure Violation of TO-630-001
Apparent Cause Analysis

On 03/24/09 the 242-A Evaporator was in OPERATION mode at the beginning of Campaigns 09-01/09-02. The C-A-1 vessel contained approximately 24,500 gallons of concentrated radioactive tank waste and was in recirculation with vacuum. Processing of tank waste for the campaigns had begun but was suspended at the time due to a failed leak detector in AW Farm. Although processing for the campaign was suspended, the specific gravity (SpG) of the C-A-1 vessel waste was at target SpG for the campaign and samples of the concentrated tank waste (slurry samples) were scheduled to be obtained.

On Tuesday, 03/24/09, a work crew was scheduled to obtain slurry samples from the recirculation loop at the 242-A Evaporator using Plant Operating Procedure TO-630-001, revision L-7, "Obtain Feed and Slurry Samples at 242-A." This is considered a high risk activity involving several plant personnel including a Senior Supervisor Watch (SSW), two Field Work Supervisors (FWS), a Radiological Control (RADCON) First Line Supervisor (FLS), several Nuclear Chemical Operators (NCOs) and several Health Physics Technicians (HPTs). One FWS (FWS1) and a portion of the work crew enter the Feed and Slurry Sampler Room while one FWS (FWS2) and the rest of the crew remain in the Aqueous Make-up Unit (AMU). The Sampler Room is posted as an Airborne Radiation Area (ARA) while sampling activities are performed. The AMU Room is a clean area.

After a pre-job meeting, the work crew proceeded to begin obtaining slurry samples per TO-630-001. At 1304 hours the FWS1 crew initiated entry to the Sampler Room. At 1340 hours the FWS1 radioed the FWS2 that they were not getting raw water to the slurry sampler; the presence of water was expected. The FWS2 crew began investigating the raw water valve line-up in the AMU Room.

The on-duty 242-A Shift Manager (SM1) and another 242-A Shift Manager-qualified employee who did not have the watch (SM2) reported to the AMU Room to provide assistance. The raw water valve line-up was visually checked and visually verified to be correct per procedure TO-630-001. While investigating the valve line-up, it was noted that the water pressure on the inlet side of raw water filter F-RW-3 in the AMU Room was reading ~80 psi on PI-F-H-4 and the outlet side was reading ~20 psi on PI-F-H-3. This indicated possible plugging of F-RW-3. SM2 requested permission from SM1 to open F-RW-3 bypass valve RWV-6 to check for plugging of F-RW-3. SM1 authorized opening of RWV-6, RWV-6 was opened and raw water flow was obtained to the slurry sampler. The FWS1 verified slurry sampler raw water flow to the FWS2. The FWS2 asked the FWS1 if they wanted to continue and the FWS1 stated they were going to continue with slurry sampling. SM1 then informed the FWS2 that the procedure did not allow sampling to continue with F-RW-3 bypassed and directed SM2 to shut bypass valve RWV-6 and

directed the FWS2 to shut down the job. Valve RWV-6 was closed and the FWS2 notified the FWS1 and slurry sampling was terminated at 1355 hours.

Pipefitters were called to check F-RW-3 for plugging. Pipefitters found the filters in F-RW-3 were almost completely plugged. Pipefitters changed the filters in F-RW-3 at 1452 hours on 03/24/09. Prior to opening F-RW-3 outlet valve RWV-3 to check for leaks, SM1 contacted the FWS1 to verify the as-left raw water valving at the slurry sampler. The FWS1 stated raw water valves at the slurry sampler were closed and it was safe to valve in raw water at F-RW-3. F-RW-3 inlet valves RWV-2 and outlet valve RWV-3 were opened to check for leaks in F-RW-3. No leaks were found but flow was observed on a raw water totalizer FQI-F-H-1. Since it was reported that the slurry sampler was isolated and no raw water flow should be occurring SM1 directed that F-RW-3 be isolated. The cause of the raw water flow was unknown and SM1 suspected that even though the FWS1 stated that slurry sampler raw water valves were closed there was a possibility that one was left open.

Slurry sampling was again scheduled for 03/25/09. While the FWS2 crew was performing raw water valving in the AMU Room, a NCO requested SM1 report to AMU. This NCO was present for the F-RW-3 filter change on the previous day and was aware that raw water flow occurred when F-RW-3 was valved in. The NCO explained to SM1 that while performing the raw water valve line-up per section 5.1.9 of T0-630-001 if all valves were opened that raw water flow would occur. The NCO stated it was possible that raw water was flowing into the slurry sampler and he was concerned that there could be raw water flow into the sampler while the crew was entering the Sampler Room. The NCO stated that members of the work crew had discussed it and wanted to wait until the work crew entered the Sampler Room before opening valve RWV-11, the final raw water valve in the AMU Room before raw water is supplied to the Sampler Room. This way the FWS1 crew could immediately notify the FWS2 crew if raw water flow was unexpectedly discovered in the Sampler Room or in the slurry sampler. SM1 concurred and valve RWV-11 was left closed at that time. Procedure execution then continued into Section 5.3, Obtain Slurry Sample with several steps being performed prior to opening valve RWV-11, which was required in Section 5.1.9.

The FWS1 crew entered the Sampler Room at 0950 hours. At 1010 hours the FWS1 requested valve RWV-11 be opened to allow raw water to the slurry sampler. The slurry sampler received raw water but raw water flow was observed on raw water totalizer FQI-F-H-1 and flow was detected by pipe vibration with slurry sampler raw water valves closed. Several 242-A personnel began investigating the cause of raw water flow including SM1, SM2, another 242-A SM-qualified employee and Engineering. Drawings were reviewed and it was determined that it was possible for raw water to flow through slurry sampler valves HV-F2-2 and HV-F2-5. The FWS1 crew visually verified that valves HV-F2-2 and HV-F2-5 were closed using the painted markings. At 1022 hours SM1 directed the NCO to shut valve RWV-11 to stop raw water flow. At 1030 hours SM1 directed that the slurry sampling job be terminated. At 1046 hours an

Engineer detected a slight level rise in the C-A-1 vessel corresponding with the time raw water flow was observed.

Figures 1 and 2 show the System Flow Diagram for the sampler.

Analysis :

- On 03/24/09 the act of opening F-RW-3 bypass valve RWV-6 to check for plugging was a sound troubleshooting decision but was not authorized by procedure TO-630-001. When no raw water flow was observed at the slurry sampler, work should have been stopped, the workplace placed in a safe configuration and work should not have continued until the cause was determined.

  Causal Codes:

  - A3B1C03 - Incorrect performance due to mental lapse. Any employee on the job could have stopped the work if the realization had been made that the troubleshooting steps were outside the procedure.
  - A3B2C04 - Previous successes in use of rule reinforced continued use of rule. There is circumstantial evidence that this type of work-around may have been used in the past.
  - A3B2C01 - Strong rule incorrectly chosen over other rules. Past successes in this high risk activity may have motivated employees to press on, violating the procedure.
  - A3B3C03 - Individual justified action by focusing on biased evidence. Past experience with the equipment by the more experienced employees working the evolution may have biased their decision-making.
  - A4B1C04 - Management follow-up or monitoring of activities did not identify problems. Facility Management oversight was inadequate.
  - A6B3C04 - Performance standards LTA. This was a "Continuous Use," step-by-step procedure.

- On 03/25/09, the decision not to open valve RWV-11 while performing step 5.1.9 was made out of concern for the safety of the FWS1 crew entering the Sample Room. Not opening valve RWV-11 was a decision based on operational experience but was not authorized by the procedure as written. In TO-630-001, Section 5.0., Obtain Feed and Slurry Samples at 242-A," there is a note that reads: "Section 5.1 must be performed before Section 5.2 (Obtain Feed Sample) or 5.3 (Obtain Slurry Sample). Sections 5.2, 5.3, 5.4 and 5.5 may be performed in any order at the discretion of the Shift Manager". The valving in step 5.1.9 was the last step in Section 5.1, Prepare to Obtain Sample on 03/25/09. The next section to be performed was Section 5.3, Obtain Slurry Sample, when the FWS1 crew enters the Sample Room. TO-630-001 requires valve RWV-11 be opened before the FWS1 crew starts Section 5.3. Steps in 5.3 were performed before RWV-11 was opened which resulted in a procedure violation. When it was determined to leave valve RWV-11 closed because of a safety concern, the work activity should have been stopped, the workplace placed in a safe configuration and the procedure changed before work was allowed to continue.

Causal Codes:

- A3B1C03 - Incorrect performance due to mental lapse. Any employee on the job could have stopped the work if the realization had been made that the troubleshooting steps were outside of the procedure.
- A3B2C04 - Previous successes in use of rule reinforced continued use of rule. There is circumstantial evidence that this type of work-around may have been used in the past.
- A3B2C01 - Strong rule incorrectly chosen over other rules. Past successes in this high risk activity may have motivated employees to press on, violating the procedure.
- A3B2C02 - Signs to stop were ignored and steps performed incorrectly. Water flow being identified when valve positions should have secured it was not seriously considered.
- A3B3C03 - Individual justified action by focusing on biased evidence. Past experience with the equipment by the more experienced employees working the evolution may have biased their decision-making.
- A3B3C05 - Incorrect assumption that a correlation existed between two or more facts. There was no correlation between the filter pluggage and HV-F2-5 being open, but the change out of the filters was assumed to fix the problem, even though there were clear indications that this was not so.
- A4B1C04 - Management follow-up or monitoring of activities did not identify problems. Facility management oversight was inadequate.
- A4B5C05 - System interactions not considered. The consideration that the "low-risk" raw water line was connected to a recirculation loop full of tank waste did not apparently enter the thought process of the personnel performing the work.
- A6B3C04 - Performance standards LTA. This was a "Continuous Use," step-by-step procedure.

- On 03/28/09, an entry was made into the Sampler Room to determine the position of HV-F2-2 and HV-F2-5. HV-F2-2 was found potentially "frozen" in the "closed" position, while HV-F2-5 was found partially open, even though the valve indicator was turned to the "Closed" position. It was determined that the actual closed condition of the valve was another 60 degrees to the counterclockwise direction.

  The valves were closed, the actual position marked and changes to the engineering documents initiated.

  Causal Code:

  - A2B4C07 – Marking / labeling LTA. The "Closed" indication for HV-F2-5 was incorrect and led to the valve being approximately 60% open.

Contributing Factors:

- The 242-A is an operational facility and all personnel are aware that procedure compliance is mandatory. However, there is an underlying thought process in the operating culture that it is extremely difficult to account for all possible problem scenarios and contingencies to address each scenario in all operating procedures. This

leads to the idea that the 242-A Shift manager has some "flexibility" in procedure usage when operating the facility. This is not a justification or authorization for procedure noncompliance but it must be acknowledged that this culture exists and it must be addressed. Personnel are more inclined to "keep the job going" and "do what it takes" to get the work done. Even though personnel act with good intentions and make decisions in the interest of personnel safety neither of these is a substitute for procedure compliance.

Causal Code:

- A3B2C04 - Previous successes in use of rule reinforced continued use of rule. There is circumstantial evidence that this type of work-around may have been used in the past.
- A3B2C01 - Strong rule incorrectly chosen over other rules. Past successes in this high risk activity may have motivated employees to press on, violating the procedure.

- On 03/24/09 and 03/25/09 the slurry sampling activity was one of several activities that SM1 was monitoring. SM1 was not able to devote his full attention to the slurry sampling activity and got involved only when abnormal conditions arose.

Causal Code:

- A3B2C03 - Too much activity was occurring and error made in problem solving. Lapse in command and control

Figure 1: Water and Air Supply for Sampler System Flow Diagram

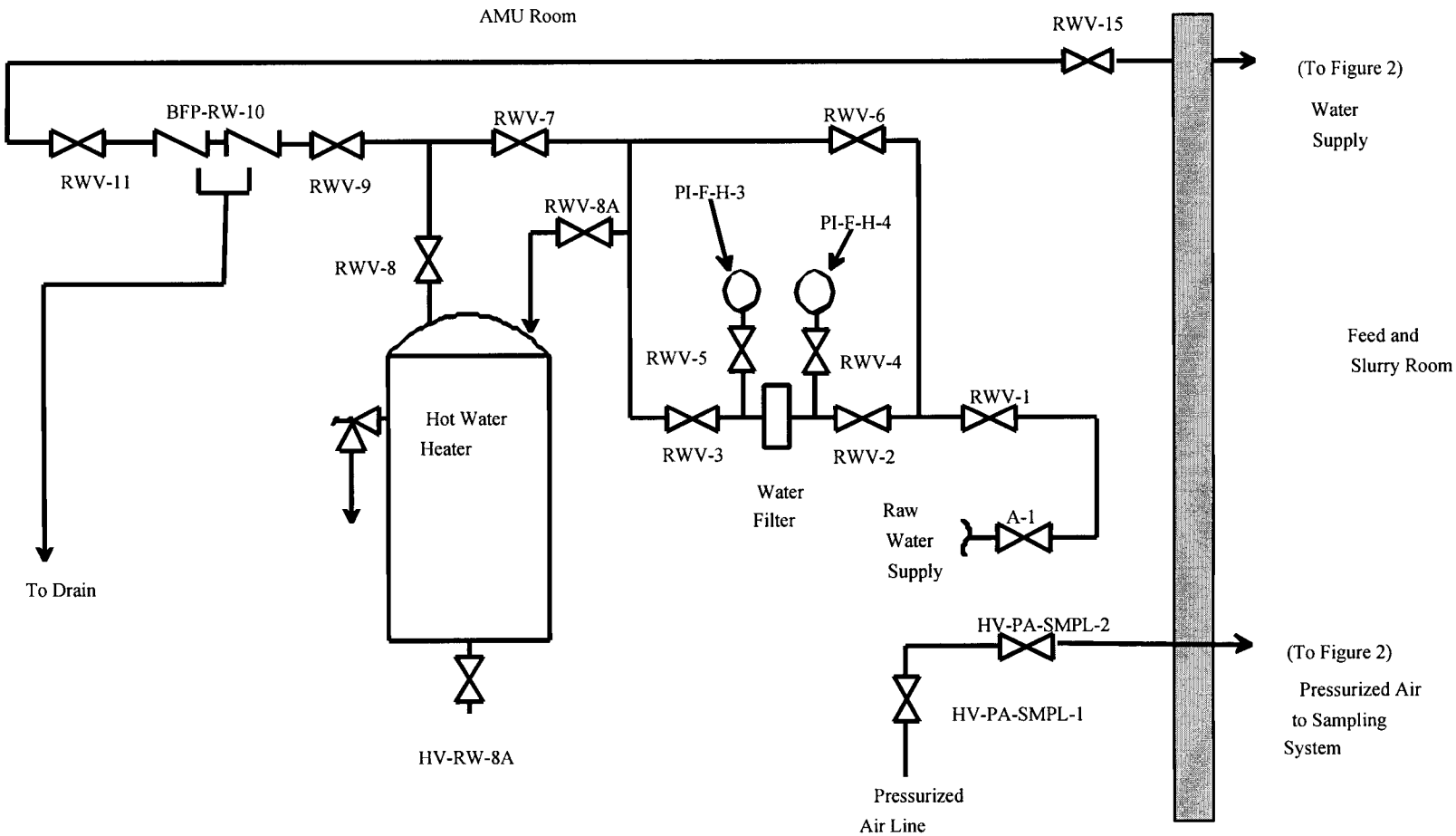

Figure 2: Slurry Sampler System Flow Diagram

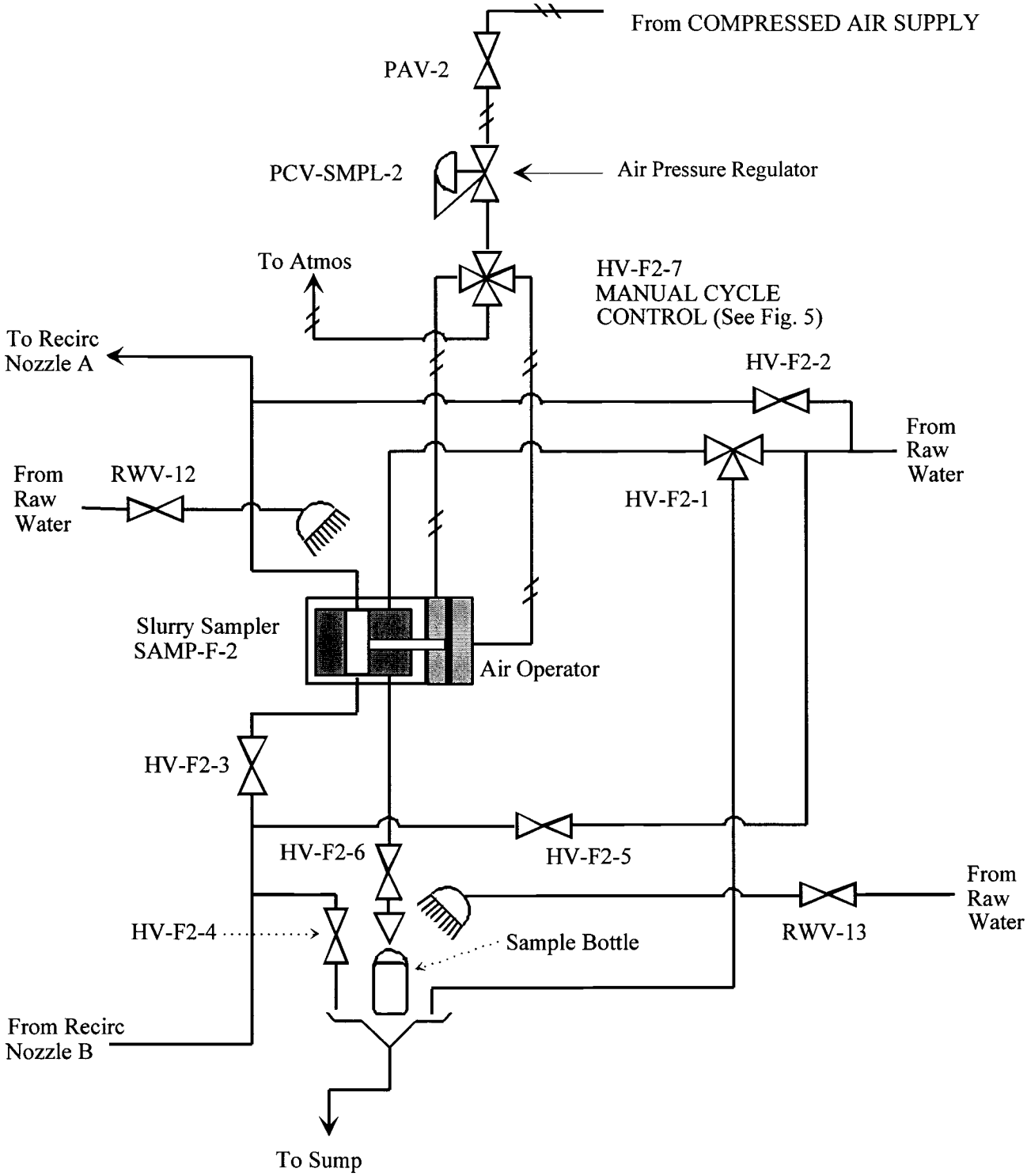

WASHINGTON RIVER PROTECTION SOLUTIONS LLC

COMMON CAUSE ANALYSIS

WRPS-PER-2009-0471

LESS THAN ADEQUATE CONDUCT OF OPERATIONS AT 242-A

Dated June 15, 2009

COMMON CAUSE ANALYSIS FOR SIMILAR EVENTS

Team Lead: _____ Date: 6/16/09

Responsible Manager: _____ Date: 06/16/09

PER Responsible Manager: _____ Date: 6/16/09

EXECUTIVE SUMMARY

This report provides the results of the common cause analysis (CCA) that was performed for similar events to those reported in WRPS-PER-2009-0471, "Less Than Adequate Conduct of Operations at 242-A," focusing on Conduct of Operations related issues. A CCA was conducted utilizing event decomposition, historical review of events contained within the Problem Evaluation Request (PER) database, review of event investigation reports and historical performance metrics, and personnel interviews.

The analysis identified the following primary common cause "Management Problem, Management Methods Less Than Adequate (LTA), Management Policy guidance/Expectations not well-defined, understood, or enforced."

One corrective action was identified as a result of this CCA to strengthen the actions already taken and will improve consistency in operations.

Problem Statement

A team was chartered to perform a CCA for similar events, focusing on Conduct of Operations related issues. The team was directed to consider for inclusion as similar events at the 244-CR Waste Disposal Vault, Tank 241-C-109, and Tank 241-S-102.

Data reviews resulted in the identification of the following four (4) similar events that occurred over a five year period and, as determined by management, required further analysis.

High Level Summary of Events Analyzed

March 24, 2009 - While performing procedure TO-630-001, "Obtain 242-A Feed and Slurry Samples," to obtain evaporator slurry samples, troubleshooting was performed outside of the bounds of the procedure without a troubleshooting plan. When the Shift Manager recognized that personnel were performing work outside the bounds of the procedure the work was stopped, a work package was obtained to change the filter in the water system, and slurry sampling was scheduled for the next day. On March 25, 2009 while performing TO-630-001, work steps in the procedure were performed out of sequence. **[WRPS-PER-2009-0471**, "Less Than Adequate Conduct of Operations at 242-A"]

May 24, 2008 - During start up of the water supply skid (a support system) for the C-109 retrieval system, the pressure relief valves actuated releasing approximately 20 gallons of water to the ground outside of C Farm adjacent to the control trailer area. The water system was being returned to service from standby condition. It was discovered that the valve that isolates the pressure transmitter was closed, thus the pressure transmitter did not send a signal to shutdown the pumps. The valving was not expected to be in the configuration that it was in: it was expected to be in the system standby condition. **[CH2M-PER-2008-1088**, "Pressure Relief Valve Actuated Releasing Approximately 20 Gallons of Water"]

July 27, 2007 - While preparing to perform S-102 to SY-102 transfer shutdown surveys, a Health Physics Technician (HPT) identified unexpected radiation levels when approaching the S-102 transfer pump. Radiation levels of 200-250 mr/hr at 8 to 15 feet from the transfer pump were identified. Subsequent

investigations discovered that there had been a spill of S-102 waste around the S-102 pump. **[CH2M-PER-2007-1327**, "S-102 Transfer Pump Leak Results in Waste Spill Near S-102 Pump Pit"]

July 22, 2004 - While pulling a thermocouple from the 244-CR Pit CR-002, a Nuclear Chemical Operator (NCO) exceeded their extremity/skin administrative control level of 15 Rem. [**PER-2004-4057**, "Extremity Controls Exceeded at 244-CR Pit CR-002"]

A CCA was performed on these events comparing Location (organization), Work Type (Program/Functional Area and Work Process), Conduct of Operations Chapter attributes, and U.S. Department of Energy (DOE) Causal Codes. Particular attention was paid to Conduct of Operations Chapters Operations Organization and Administration (Command and Control), Shift Routines and Operating Practices (procedure compliance), and Control of Equipment and System Status.

Background

In accordance with the requirements of TFC-ESHQ-Q_ADM-C-11, "Root and Common Cause Analysis and Corrective Action Planning," a CCA was performed. CCA is a root cause analysis technique that characterizes the symptoms of organizational and programmatic issues and human errors.

The CCA team was: Nancy Milliken, Beth Mata, Greg Hanson, and technical points of contact Ron Tucker, Rebecca Raven, and Dave Saueressig.

Common Cause Analysis Summary

The CCA identified four common causes associated with the events. These common causes were determined based on the results of event decomposition and were then evaluated against corrective action plans and compensatory measures to determine their adequacy and note any additional improvement opportunities.

In accordance with TFC-ESHQ-Q_ADM-C-11, the following provides a summary of the events by dimension.

Event	Organization (current)	Program/ Functional Area	Work Process	External Factor Influencing Act	Internal Factor Influencing Act	Human Error Type
Event – 242-A	Base Operations	Operations	Operation	Management	Human Performance	A3B1C03
Event – C-109	SST Retrieval and Closure	Operations	Operation	Management	Human Performance	A3B1C01
Event – S-102	SST Retrieval and Closure	Operations	Operation	Management	Equipment/Design	None
Event – CR Vault	Base Operations	Operations	Operation	Management	Management Methods	None

To facilitate discussion, this CCA utilizes the five core functions of Integrated Safety Management (ISM) to summarize its results and demonstrate the completeness and interrelationship between the common events.

The five core functions of an Integrated Safety Management (ISMS) are:

- Define the Scope of Work. Missions are translated into work, expectations are set, tasks are identified and prioritized, and resources are allocated.
- Identify the Hazards. Hazards associated with the work are identified, analyzed, and categorized.
- Develop and Implement Hazard Controls. Applicable standards and requirements are identified and agreed-upon, controls to prevent/mitigate hazards are identified, the safety envelope [authorization basis] is established, and controls are implemented.
- Perform Work Within Controls. Readiness is confirmed and work is performed safely.
- Provide Feedback and Continuous Improvement. Feedback information on the adequacy of controls is gathered, opportunities for improving the definition and planning of work are identified and implemented, line and independent oversight is conducted, and, if necessary, regulatory enforcement actions occur.

Define Scope of Work

In defining the scope of work, the first core function of ISMS is implemented. The detail and rigor by which the work is defined influences the ability to perform the subsequent steps of hazard identification, hazard control, and the performance of work. In all cases, the work to be performed was clear to those involved.

Hazard Identification

The category of Hazard Identification is the hazard itself, including the magnitude of the hazard, if not adequately identified, subsequent hazard control processes cannot be effectively implemented to mitigate the hazard.

Two attributes were evaluated for this category, hazard encountered not evaluated and task not analyzed. For each of the four events, a hazard was present that was not being adequately controlled.

Hazard Control

The category of Hazard Control evaluated the linkage between the hazard identification process and the development of controls and the adequacy of the controls established.

In the two events that demonstrated human performance errors there was a demonstration of a breakdown between the hazard identification and control implementation processes. The identified control became inadequate because the importance of the control was not understood, since one hazard was substituted for another.

Perform Work

The Perform Work category evaluated the activities themselves. A review of the Conduct of Operations attributes resulted in the identification of Chapter 1, "Operations Organization and Administration," issues relating to Command and Control, the identification of Chapter 2, "Shift Routines and Operating Practices," issues with procedure compliance, and Chapter 4, "Communications," practices less than adequate.

Also, failures in management methods demonstrate weaknesses in line management oversight and the presence of a management problem/error causal factor [A4B1C01].

Feedback

The Feedback category analyzed the adequacy of corrective actions associated with the events.

Management problems were demonstrated by a failure to reinforce management expectations regarding procedure compliance, command and control, and communication.

Generic Implications

The results of the Problem Evaluation Request (PER) system review were used to validate the transportability of these internal and external influencing factors to other similar conditions. The outcome of this analysis showed weaknesses in Human Performance, Management Problems, and Communications.

The top seven causal factor nodes are displayed below. From this chart it is clear that the A3, "*Human Performance,*" and A4, "*Management Problem,*" fields contain the bulk of the coding.

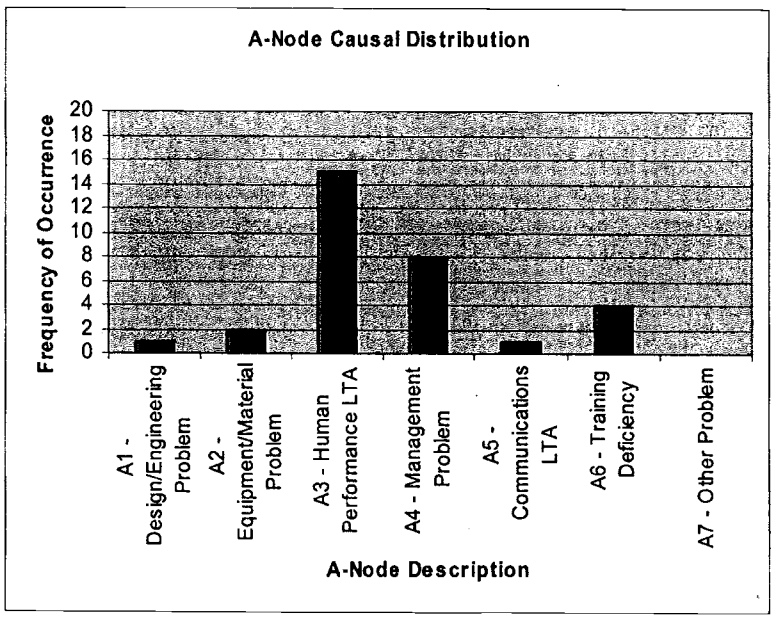

A review of secondary cause codes in the A3, "*Human Performance LTA,*" reveals that "R*ule Based Error*" mode is the largest contributor. (>50%)

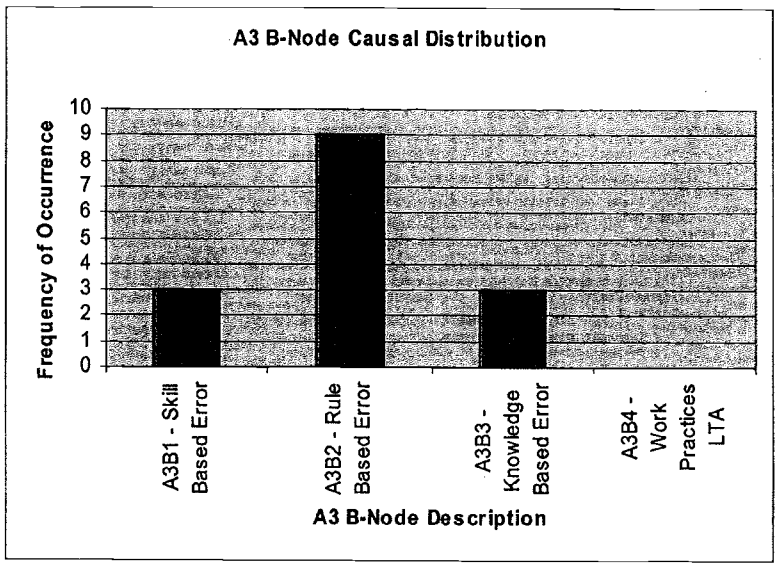

Further drilldown analysis of A3B2 indicated the two major contributors within "*Human Performance LTA, Rule Based Error*" are "*Strong Rule Incorrectly Chosen Over Other Rules*" and "*Previous Success in Use of Rule Reinforced Continued Use of Rule.*"

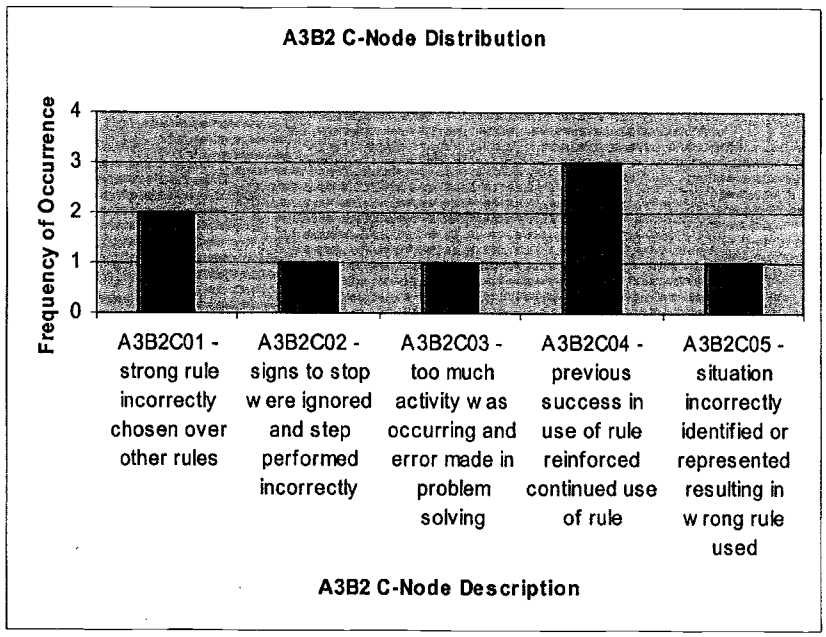

Review of secondary cause codes indicate that for the A4, "*Management Problem*" grouping the largest contributor is "*Management Methods LTA*." (>50%)

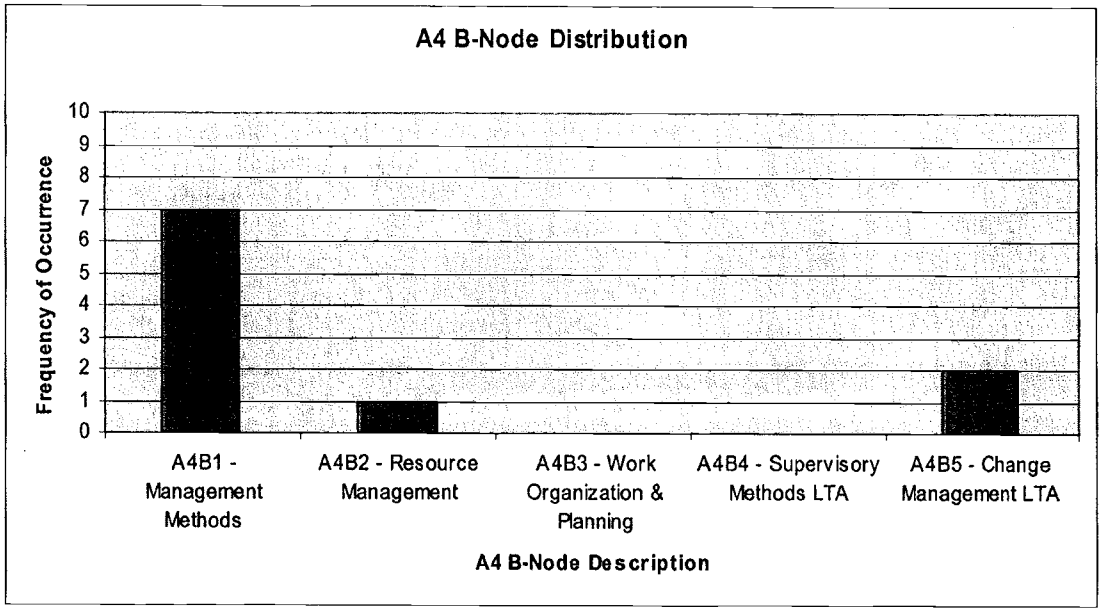

Further drill down of the cause codes to the third level provided only single data points and do not demonstrate a grouping or trend.

Sampling error and events for inclusion in the evaluation were evaluated based on reviews of the following:

- Problem Evaluation Requests (PERs) with a significance level of "Significant"
- PERs coded to the Safety Management Program "Conduct of Operations"
- Washington River Protection Solutions, LLC (WRPS) Performance Indicators, especially those related to Technical Safety Requirement Violations and Conduct of Operations Events and Occurrences ConOps Index, and the applicable source data
- Event Investigation Reports (2004 to present).

No additional events were found to add to the data set being reviewed, therefore the sampling error was determined to be minimal.

Document reviews and interviews were used to compile the following Conduct of Operations attributes table (Table 1). The results of the Conduct of Operations attributes resulted in the identification of the following three (3) common themes between the events:

1. Chapter 1, Operations Organization and Administration – Command and Control Issues
2. Chapter 2, Shift Routines and Operating Practices – Procedure Compliance Issues
3. Chapter 4, Communications – Communications Less Than Adequate.

TABLE 1
EVENT COMPARISON - CONDUCT OF OPERATIONS ATTRIBUTES

CONDUCT OF OPERATIONS CHAPTER	EVENT 1 – 242-A Less Than Adequate Conduct of Operations at 242-A	EVENT 2 – C-109 Pressure Relief Valve Actuated Releasing Approximately 20 Gallons of Water	EVENT 3 – S-102 S-102 Transfer Pump Leak Results in Waste Spill Near S-102 Pump Pit	EVENT 4 – CR VAULT Extremity Controls Exceeded at 244-CR Pit CR-002
Chapter 1[1] Operations Organization and Administration This chapter establishes the framework and guidelines for conducting operations in a safe, professionally compliant manner to ensure the safety and welfare of employees, the public, the environment and facilities and equipment.	Command and Control - Issue with chain of command. The Shift Manager (SM) authorized work outside of the sequence of the procedure for troubleshooting and work performance. Organization and administration of operations within Tank Farm Contractor facilities and projects shall ensure that a high level of operating performance is achieved through effective implementation and control of activities.	Command and Control – Issue with chain of command. Considered a contributing cause to the event. The system was restarted by the Operating Engineer (OE) without full knowledge of system status. Organization and administration of operations within Tank Farm Contractor facilities and projects shall ensure that a high level of operating performance is achieved through effective implementation and control of activities.	None	Command and Control - Issue with chain of command. The Field Work Supervisor (FWS) was not aware of all of the information needed to make the right decisions and a second FWS who was not in charge made decisions for him. Organization and administration of operations within Tank Farm Contractor facilities and projects shall ensure that a high level of operating performance is achieved through effective implementation and control of activities.
Chapter 2[2] Shift Routines and Operating Practices This chapter establishes the guidelines for shift routines and operating practices to ensure operational performance meets the expectations of DOE and TFC management.	Procedure Compliance - Operations shall be performed in strict adherence with approved procedures.	None	Procedure Compliance - Shift Manager did not call 911 as required.	None

[1] Blue = Common Theme Between Events

TABLE 1 EVENT COMPARISON - CONDUCT OF OPERATIONS ATTRIBUTES				
CONDUCT OF OPERATIONS CHAPTER	**EVENT 1 – 242-A** Less Than Adequate Conduct of Operations at 242-A	**EVENT 2 – C-109** Pressure Relief Valve Actuated Releasing Approximately 20 Gallons of Water	**EVENT 3 – S-102** S-102 Transfer Pump Leak Results in Waste Spill Near S-102 Pump Pit	**EVENT 4 – CR VAULT** Extremity Controls Exceeded at 244-CR Pit CR-002
Chapter 3 Control Area Activities This chapter establishes the guidelines to support safe and efficient facility operation when control areas are established.	None	None	None	None
Chapter 4[3] Communications This chapter established the guidelines for highly effective, reliable, and accurate transmission of information.	None	Communications was less than adequate. Communications between maintenance and operations on valve status. Communication between the Retrieval Operations Operating Engineer (OE) and Base Operations Senior Shift Manager (SSM) was lacking when the OE attempted a restart of the water system spilling additional water to the ground.	Communications was less than adequate. Environmental representative did not report the correct information to the National Response Center. Missed communication between NCO in field and the OE supervisor on the odor smelled being unusual.	Communications less than adequate. FWS was unaware of the magnitude of the dose rate. Issue with 3 way communications.
Chapter 5 Control of On-Shift Training This chapter establishes the guidelines for the control of trainee training.	None	None	None	None

[2] Blue = Common Theme Between Events
[3] Blue = Common Theme Between Events

TABLE 1 EVENT COMPARISON - CONDUCT OF OPERATIONS ATTRIBUTES				
CONDUCT OF OPERATIONS CHAPTER	**EVENT 1 – 242-A** Less Than Adequate Conduct of Operations at 242-A	**EVENT 2 – C-109** Pressure Relief Valve Actuated Releasing Approximately 20 Gallons of Water	**EVENT 3 – S-102** S-102 Transfer Pump Leak Results in Waste Spill Near S-102 Pump Pit	**EVENT 4 – CR VAULT** Extremity Controls Exceeded at 244-CR Pit CR-002
Chapter 6 Investigation of Abnormal Events This chapter establishes the guidelines for a uniform program to investigate events and for documenting feedback and lessons-learned from events or activities that went particularly well.	None	None	None	None
Chapter 7 Notifications This chapter establishes the guidelines for notifying the U.S. Department of Energy (DOE) and other appropriate agencies of events or conditions that have or may have safety, health, quality assurance, security, public, or environmental concerns.	None	None	Environmental representative did not report the correct information to the National Response Center.	None
Chapter 8 Control of Equipment and System Status This chapter establishes the guidelines for the control of system/equipment status and operational boundaries which provides a clear understanding of work hazards and the consequences of improper operation.	None	System Status was a contributing cause to the water release incident. The status of the valve configuration was not known. Maintenance activities had changed the configuration and operations did not know the current configuration.	None	None

TABLE 1 EVENT COMPARISON - CONDUCT OF OPERATIONS ATTRIBUTES				
CONDUCT OF OPERATIONS CHAPTER	**EVENT 1 – 242-A** Less Than Adequate Conduct of Operations at 242-A	**EVENT 2 – C-109** Pressure Relief Valve Actuated Releasing Approximately 20 Gallons of Water	**EVENT 3 – S-102** S-102 Transfer Pump Leak Results in Waste Spill Near S-102 Pump Pit	**EVENT 4 – CR VAULT** Extremity Controls Exceeded at 244-CR Pit CR-002
Chapter 9 Lockouts and Tagouts This chapter establishes the guidelines for lockout/tagout control of recognized and potential hazardous energy sources when performing repair, maintenance or other service work.	None	None	Isolation method of "controlling the cord" technique was incorrectly used when rotating the pump, should have been an AWL or Controlling Organization Lockout/Tagout.	None
Chapter 10 Independent Verification This chapter establishes the guidelines of independent verification of the correct positioning of components that are critical to the safe operation of processes, systems or facilities, and establishes error reduction self checking techniques.	None	None	None	None
Chapter 11 Logkeeping This chapter establishes the guidelines for establishing and maintaining operating logs to record the data necessary to provide an accurate history of facility operations.	None	None	None There was no log kept at the S-102 control room. This was not a violation of any requirement at the time, but was an action adopted after the event investigation. This had no bearing on the event itself.	None

TABLE 1 EVENT COMPARISON - CONDUCT OF OPERATIONS ATTRIBUTES				
CONDUCT OF OPERATIONS CHAPTER	**EVENT 1 – 242-A** Less Than Adequate Conduct of Operations at 242-A	**EVENT 2 – C-109** Pressure Relief Valve Actuated Releasing Approximately 20 Gallons of Water	**EVENT 3 – S-102** S-102 Transfer Pump Leak Results in Waste Spill Near S-102 Pump Pit	**EVENT 4 – CR VAULT** Extremity Controls Exceeded at 244-CR Pit CR-002
Chapter 12 Operations Turnover This chapter establishes the guidelines for operations turnover to ensure oncoming personnel are provided pertinent information about the overall status of the operation.	None	None	None	None
Chapter 13 Operations Aspects of Facility Chemistry and Unique Processes This chapter establishes the guidelines necessary to ensure that the parameters for chemistry or unique processes are properly maintained.	Chapter Not Applicable to Tank Farm Operations	Chapter Not Applicable to Tank Farm Operations	Chapter Not Applicable to Tank Farm Operations	Chapter Not Applicable to Tank Farm Operations
Chapter 14 Required Reading This chapter establishes the guidelines for a uniform, formal required reading program ensuring personnel are made aware of information related to their assigned tasks.	None	None	None	None
Chapter 15 Timely Orders to Operators This chapter establishes the guidelines for dissemination of essential short-term information and	None	None	None	None

TABLE 1 EVENT COMPARISON - CONDUCT OF OPERATIONS ATTRIBUTES				
CONDUCT OF OPERATIONS CHAPTER	**EVENT 1 – 242-A** Less Than Adequate Conduct of Operations at 242-A	**EVENT 2 – C-109** Pressure Relief Valve Actuated Releasing Approximately 20 Gallons of Water	**EVENT 3 – S-102** S-102 Transfer Pump Leak Results in Waste Spill Near S-102 Pump Pit	**EVENT 4 – CR VAULT** Extremity Controls Exceeded at 244-CR Pit CR-002
administrative instructions to operations personnel.				
Chapter 16 Operations Procedures This chapter establishes the guidelines for preparation, approval, control, and use of operations procedures.	None	None	There were a number of recommendations made for improving operating procedures as result of review of the event.	None
Chapter 17 Operator Aid Postings This chapter establishes the guidelines for controlling and auditing operator aids.	None	None	None	None
Chapter 18 Equipment and Piping Labeling This chapter establishes the guidelines for equipment and piping labeling to ensure personnel are able to positively identify systems and equipment.	None	None	None	None

Recommended Corrective Actions

The common cause "Management Problem, Management Methods Less Than Adequate (LTA), Management Policy guidance/Expectations not well-defined, understood, or enforced" [A4B1C01] can be addressed by the following corrective action.

CA-01: Assemble a worker-level team to evaluate the active human errors (event "triggers") associated with the events described in CCA report for LTA Conduct of Operations at 242-A. Include an evaluation of "last-line-of-defense" tools/techniques used to prevent active human errors. Provide recommendations to the Conduct of Operations Council on tools, techniques, etc. that, if strengthened or implemented, will aid in the prevention of future similar events.

The team should include a cross-organizational representation of Bargaining Unit personnel, First Line Managers, and Operations Engineers.

> Actionee: R. E. Gregory
> Due Date: July 20, 2009
> Objective Evidence: Summary of suggestions/discussion topics. Evidence of transmittal to Conduct of Operations Council.

CA-02: Develop a Conduct of Operations Improvement Plan to address weaknesses in Chapters 1, 2, and4. The Conduct of Operation Improvement should include a means to reduce human error, increase management oversight and communications, and reinforcement of the questioning attitude.

> Actionee: Conduct of Operations Council Chairperson
> Due Date: July 31, 2009
> Objective Evidence: Issued Improvement Plan.

This corrective action can be reinforced by on-going actions being taken to address WRPS-PER-2009-0385, "Results of DOE Surveillance of WRPS Response to Abnormal Events."

WRPS-PER-2009-0385.7, "CC-07 Re-emphasize an aggressive Management Observation Program (MOP) to continually perform management oversight and encourage routine feedback. Focus areas should include Conduct of Operations, Radiological Control Operations, alarm response and table-top drills."

> Actionee: M. N. Brosee
> Due Date: April 24, 2009 (COMPLETE)
> Deliverable: Issued memo of expectations to MOP designated personnel.

WRPS-PER-2009-0385.9, "CATPR-01-02 Ensure shift managers are briefed on the importance of 3-way communication including complete directions, repeat back, and acknowledgement."

> Actionee: T. R. Reynolds
> Due Date: May 24, 2009
> Deliverable: Copy of briefing material and course completion rosters.

WRPS-PER-2009-0385.3, "CC-03 Provide face-to-face briefings to reiterate the expectations for Tank Farm, 222-S, and SST Retrieval and Closure personnel for timely identification and evaluation of conditions adverse to quality, safety, health, operability, and the environment (as required by TFC-ESHQ-

Q_C-C-01, "Problem Evaluation Request.") Also include expectations on the importance of a questioning attitude, conservative decision making, procedure compliance, and formal communications."

Actionee: M. N. Brosee
Due Date: May 27, 2009 (COMPLETE)
Deliverable: Summary of briefing material and course completion rosters.

Conclusion

The set of actions taken, or planned, associated with the events address only event specific issues and may or may not prevent recurrence. The corrective actions identified by the team will strengthen the actions already taken and will improve consistency in operations.

Attachment
Attachment A – Interview Listing and References/Bibliography

Attachment A
Interview Listing and References/Bibliography

Interviewed

Ron Tucker, Manager Base Operations West Maintenance
Rebecca Raven, Manager Evaporator Operations (242-A Facility Manager)
Dave Saueressig, Manager SST Retrieval and Closure Technical and Systems Planning Operations.

References/Bibliography

Problem Evaluation Requests

1. WRPS-PER-2009-0471, Less Than Adequate Conduct of Operations at 242-A
2. CH2M-PER-2008-1088, Pressure Relief Valve Actuated Releasing Approximately 20 Gallons of Water
3. CH2M-PER-2007-1327, S-102 Transfer Pump Leak Results in Waste Spill Near S-102 Pump Pit
4. PER-2004-4057, Extremity Controls Exceeded at 244-CR Pit CR-002.

Procedures

1. TFC-ESHQ-Q_ADM-C-11, Root and Common Cause Analysis and Corrective Action Planning
2. TFC-ESHQ-PAAA-C-01, Price-Anderson Amendments Act Evaluation and Reporting
3. TFC-OPS-OPER-C-24, Occurrence Reporting and Processing of Operations Information.

Manuals

1. DOE O 5480.19, Conduct of Operations Requirements for DOE Facilities.

Plans

1. TFC-PLN-05, Conduct of Operations Implementation Plan.

Event Investigation Reports

1. EIR-2009-007, 242-A Feed and Slurry Sample Procedural Deviation
2. EIR-2008-011, C-109 Water Skid Relief Valve Lifting
3. EIR-2007-013, Event Investigation Team Report, Radioactive Waste Leak at S-102
4. EIR-2004-018, 244-CR Vault Thermocouple Removal: Extremity Administrative Control Level Exceeded.

Other Type Documents

1. EM-RP--WRPS-TANKFARM-2009-0005, Violation of Procedure TO-630-001 During Slurry Sampling at 242A Evaporator
2. 242-A Procedure Violation of TO-630-0001 Apparent Cause Analysis
3. Management Observation Checklist, James C. Dupaquier, 3/25/09
4. EM-RP--CHG-TANKFARM-2007-0009, Tank 241-S-102 Waste Spill

5. Root Cause Analysis Report CH2M-PER_2007-1327, Radioactive Waste Spill at Tank 241-S-102 on July 27, 2007
6. RP—CHG-TANKFARM-2004-0037, Nuclear Chemical Operator Extremity Administrative Control Level Exceeded
7. Causal Analysis Report, 244-CR Vault Thermocouple Removal: Extremity Administrative Control Level Exceeded
8. End Point Management Assessment of Problem Evaluation Report 2004-4057, 244-CR Vault Thermocouple Removal: Extremity Administrative Control Level Exceeded.

INTEROFFICE MEMORANDUM

washington river protection solutions

WRPS-0900634

Date: April 30, 2009

To: Rebecca P. Raven
Evaporator Operations

From: Nanci L. Peters, Fact-Finding Lead,
Security & Emergency Services/Events Investigations and PAAA

Subject: FACT FINDING EVENT INVESTIGATION REPORT EIR-2009-007, 242-A FEED AND SLURRY SAMPLE PROCEDURAL DEVIATION.

Submitted for your information and use is the Fact-Finding report EIR-2009-007, *242-A Feed and Slurry Sample Procedural Deviation.* Enclosed is the initial timeline obtained during the investigation.

As the responsible manager, resolution of problem evaluation request WRPS-PER-2009-0471 should include consideration of this report along with identification of the cause(s) of the event and the development and implementation of the corrective actions.

Should you have any questions or need additional information regarding this report, please contact me at 373-2331.

NLP:NLP

Enclosure – Report

cc:	A Ardamica	S5-15	GJ Johnson	H6-18
	HS Berman	R2-58	WJ Johnson, III	H6-63
	F Beranek	R2-50	EE Kennedy	H6-63
	JE Borrowman	S5-03	JA Mitchell	S5-14
	MN Brosee	R2-50	PL Owen	S5-15
	C Burrows	H6-03	C. Peoples	S7-20
	LM Calderon	S7-70	NL Peters	R1-51
	RJ Ciola	H6-60	R Quirk	H6-60
	G. Doss	S5-03	KA Roueche	S5-12
	J. Dupaquier	S7-05	DJ Sansotta	H6-17
	D Gilles	S5-14	SM Sax	H6-63
	RE Gregory	R1-01	EA Tackett	R1-51
	D Harrison	S5-15	BR Thomas	R1-51
	JN Holloway	H6-04	SF Waters	S5-23
	PJ Hurson	S5-15	B. Williamson	H6-60
	CE Anderson	R2-50	V. Mehrer	S7-68

RECEIVED
APR 30 2009
WRPS
CORRESPONDENCE CONTROL

WRPS-0900634

Enclosure

FACT-FINDING EVENT INVESTIGATION REPORT
EIR-2009-007

242-A FEED AND SLURRY SAMPLE PROCEDURAL DEVIATION

Consisting of 3 pages
Including cover sheet

FACT-FINDING REPORT

242-A FEED AND SLURRY SAMPLE PROCEDURAL DEVIATION

Event Investigation Report No. EIR-2009-007

Nanci L. Peters — Date 4/30/2009

Rebecca P. (Bexa) Raven — Date 4/30/2009

PER No. WRPS-PER-2009-0471

242-A FEED AND SLURRY SAMPLE PROCEDURAL DEVIATION

Investigation Summary

On 3/24/09 while performing Procedure TO-630-001 to obtain evaporator slurry samples troubleshooting was performed which was outside the bounds of the procedure. The Shift Manager recognized that they were performing work outside the bounds of the procedure and work was stopped. A work package was obtained to change the filter in the water system (part of the initial troubleshooting) and slurry sampling was scheduled for the following day. On 3/25/09, once again, work steps in Procedure TO-630-001 were performed out of sequence. The Facility Representative noticed the operation of a valve in Section 5.3 that should have been performed in Section 5.1. The Facility Representative notified the Senior Supervisor Watch (SSW) and work was stopped.

Event Timeline

Note: Entries and associated times listed below are from the fact finding meeting and logbook entries completed by the 242-A Shift Manager (SM) and (A1) Operator.

3/24/2009

0906 Pre-job for slurry sampling complete (SM)
1220 Slurry sampling team preparing to dress for entry into the pump storage room (A1)
1300 Entering high radiation area (A1)
1304 Slurry crew initiating entry for slurry samples (SM)
1307 Process memo required obtaining samples during transfer to AP-104 (SM)
Transfer had not been initiated, however, SPG was within range and engineering approved obtaining sample prior to transfer (SM)
1309 Load out room curtain being closed (A1)
1351 Slurry sampling crew not getting raw water to sampler. SM authorized opening water filter F-RW-3 bypass valve RWV-6 to determine if water filter is plugged. (SM)
1352 Redirection of SM to suspend activity at this time in order to clean the possibly plugged water filter F-RW-3 (A1)
1355 Raw water flow to slurry sample was obtained with bypass valve RWV-6 open indicating water filter F-RW-3 is plugged. Sampling suspended pending filter replacement. (SM)
1423 All personnel out of HCR and high rad service door secure (A1)
1452 Water filter F-RW-3 filter is changed (SM)

3/25/2009

0745 Slurry sample pre-job at M0511 (A1)
0837 Completed pre-job for slurry sampling (SM)
0850 Crew arriving for slurry sampling (A1)
0947 Entering HRA for slurry sampling (A1)
0950 Slurry sampling crew entering loadout room (SM)
1010 When raw water valve RWV-11 was opened flow was detected on flowmeter FQI-F-H-1 and by pipe vibration slurry sample crew not getting flow to slurry sampler (SM)
1028 Still not getting water to slurry sampler, raw water flow still evident on FQI-F-H-1 instructed A2 operator to close valve RWV-11 at 1022 hours (SM)
1030 Per shift manager slurry sampling job terminated – trouble obtaining water flow to slurry cabinet. (A1)
1046 Engineering detected slight liquid level rise in C-A-1 at times corresponding with water flow through RWV-11. (SM)

1058 Late Entry – Approximately 1030 hours directed slurry sampling field work supervisor to shut down job and pull crew out until raw water issue can be resolved. (SM)

1100 All out of area, door locked and secured (A1)

1235 HPT checked BFP-RW-10 and associated piping for elevated dose rates, all readings normal. (SM)

1410 Due to potential for waste back-feed from recirculation loop to raw water system on the AMU mezzanine the following actions were initiated: Valves RWV-11 and RWV-15 to have lock and tag installed. (Completed at 1515 hours) Temporary HPT rounds to perform dose rates of AMU mezzanine raw water line to RWV-9 to all penetrations downstream of RWV-15 every four hours (initiated at 1437) (SM)

Potential Causes

Potential causes are being investigated by Evaporator Operations Management. Apparent cause analysis will be documented as part of the resolution of WRPS-PER-2009-0471.

EM-RP--WRPS-TANKFARM-2009-0005 NOTIFICATION/FINAL

Occurrence Report

After 2003 Redesign

Tank Farms

(Name of Facility)

Nuclear Waste Operations/Disposal

(Facility Function)

Hanford Site — Washington River Protection Solutions, LLC

(Site) (Contractor)

Name: Raven, Rebecca P
Title: Manager, Evaporator Operations **Telephone No.:** (509) 373-6016

(Facility Manager/Designee)

Name: WATERS, SHAUN F
Title: OPERATIONS SPECIALIST **Telephone No.:** (509) 373-3457

(Originator/Transmitter)

Name: **Date:**

(Authorized Classifier (AC))

1. Occurrence Report Number: EM-RP--WRPS-TANKFARM-2009-0005

Violation of Procedure TO-630-001 During Slurry Sampling at 242A Evaporator

2. Report Type and Date: NOTIFICATION/FINAL

	Date	Time
Notification:	03/31/2009	15:44 (ETZ)
Initial Update:	03/31/2009	15:44 (ETZ)
Latest Update:	03/31/2009	15:44 (ETZ)
Final:	03/31/2009	15:44 (ETZ)

3. Significance Category: 4

4. Division or Project: Washington River Protection Solutions, LLC (WRPS)

5. Secretarial Office: EM - Environmental Management

6. System, Bldg., or Equipment: Slurry Sample/242-A Evaporator

7. UCNI?: No

8. Plant Area: 200 East

9. Date and Time Discovered: 03/27/2009 16:25 (PTZ)

10. Date and Time Categorized: 03/27/2009 16:35 (PTZ)

11. DOE HQ OC Notification:

Date	Time	Person Notified	Organization
NA	NA	NA	NA

12. Other Notifications:

Date	Time	Person Notified	Organization
03/27/2009	16:35 (PTZ)	Owen, P. L.	WRPS
03/27/2009	16:38 (PTZ)	Brosee, M. N.	WRPS
03/27/2009	16:42 (PTZ)	Wright, D. L.	DOE-ORP
03/27/2009	16:47 (PTZ)	Crary, N. L. Jr.	ONC

13. Subject or Title of Occurrence:

Violation of Procedure TO-630-001 During Slurry Sampling at 242A Evaporator

---

14. Reporting Criteria:

10(2) - An event, condition, or series of events that does not meet any of the other reporting criteria, but is determined by the Facility Manager or line management to be of safety significance or of concern to other facilities or activities in the DOE complex. One of the four significance categories should be assigned to the occurrence, based on an evaluation of the potential risks and the corrective actions taken. (1 of 4 criteria - This is a SC 4 occurrence)

---

15. Description of Occurrence:

On March 24, 2009, while employees of the Washington River Protection Solutions (WRPS) were performing procedure TO-630-001, "Obtain 242-A Feed and Slurry Samples" at the 242-A Evaporator facility, troubleshooting of an unexpected system response was initiated outside of the bounds of the procedure without a troubleshooting plan. When the 242-A Shift Manager recognized that they were performing work outside the bounds of the procedure the work was stopped.

The suspected cause of the unexpected system response was a plugged filter in the water line; a work package was developed to change the filter and the filter was changed out later that day.

On the following day, March 25, 2009, during performance of the same procedure, TO-630-001, the Office of River Protection (ORP) Facility Representative (FR) observed the operation of a valve in Section 5.3 of the

procedure that should have been performed in Section 5.1. The Facility Representative notified the WRPS Senior Supervisory Watchstander and work was stopped.

On March 27, 2009, upon further review, WRPS management determined this event should be reported as a Group 10, Management Concerns/Issues, (2) SC(4).

---

16. Is Subcontractor Involved? No

---

17. Operating Conditions of Facility at Time of Occurrence:

In Operations Mode.

---

18. Activity Category:

03 - Normal Operations (other than Activities specifically listed in this Category)

---

19. Immediate Actions Taken and Results:

On 3/25/2009, work was stopped and plant placed in safe configuration.

On 3/26/2009, a Red Arrow logbook entry made stating, "Do not Remove Admin Locks from AW-102 Feed Pump and PB-2 pump until Authorized to Restart by Scott Sax [Manager, Project Operations]."

---

20. ISM:

4) Perform Work Within Controls

---

21. Cause Code(s):

---

22. Description of Cause:

---

23. Evaluation (by Facility Manager/Designee):

---

24. Is Further Evaluation Required?: No

---

25. Corrective Actions
Local Tracking System Name: Problem Evaluation Request

---

26. Lessons Learned:

27. Similar Occurrence Report Numbers:

28. User-defined Field #1:

29. User-defined Field #2:

Problem Evaluation Request WRPS-PER-2009-0471

30. HQ Keyword(s):

31. HQ Summary:

32. DOE Facility Representative Input:

33. DOE Program Manager Input:

EM-RP--WRPS-TANKFARM-2009-0005 NOTIFICATION/FINAL

Occurrence Report

After 2003 Redesign

Tank Farms

(Name of Facility)

Nuclear Waste Operations/Disposal

(Facility Function)

Hanford Site — Washington River Protection Solutions, LLC

(Site) (Contractor)

Name: Raven, Rebecca P
Title: Manager, Evaporator Operations **Telephone No.:** (509) 373-6016

(Facility Manager/Designee)

Name: WATERS, SHAUN F
Title: OPERATIONS SPECIALIST **Telephone No.:** (509) 373-3457

(Originator/Transmitter)

Name: **Date:**

(Authorized Classifier (AC))

1. Occurrence Report Number: EM-RP--WRPS-TANKFARM-2009-0005

Violation of Procedure TO-630-001 During Slurry Sampling at 242A Evaporator

2. Report Type and Date: NOTIFICATION/FINAL

	Date	Time
Notification:	03/31/2009	15:44 (ETZ)
Initial Update:	03/31/2009	15:44 (ETZ)
Latest Update:	03/31/2009	15:44 (ETZ)
Final:	03/31/2009	15:44 (ETZ)

3. Significance Category: 4

4. Division or Project: Washington River Protection Solutions, LLC (WRPS)

5. Secretarial Office: EM - Environmental Management

6. System, Bldg., or Equipment: Slurry Sample/242-A Evaporator

7. UCNI?: No

8. Plant Area: 200 East

9. Date and Time Discovered: 03/27/2009 16:25 (PTZ)

10. Date and Time Categorized: 03/27/2009 16:35 (PTZ)

11. DOE HQ OC Notification:

Date	Time	Person Notified	Organization
NA	NA	NA	NA

12. Other Notifications:

Date	Time	Person Notified	Organization
03/27/2009	16:35 (PTZ)	Owen, P. L.	WRPS
03/27/2009	16:38 (PTZ)	Brosee, M. N.	WRPS
03/27/2009	16:42 (PTZ)	Wright, D. L.	DOE-ORP
03/27/2009	16:47 (PTZ)	Crary, N. L. Jr.	ONC

13. Subject or Title of Occurrence:

Violation of Procedure TO-630-001 During Slurry Sampling at 242A Evaporator

---

14. Reporting Criteria:

10(2) - An event, condition, or series of events that does not meet any of the other reporting criteria, but is determined by the Facility Manager or line management to be of safety significance or of concern to other facilities or activities in the DOE complex. One of the four significance categories should be assigned to the occurrence, based on an evaluation of the potential risks and the corrective actions taken. (1 of 4 criteria - This is a SC 4 occurrence)

---

15. Description of Occurrence:

On March 24, 2009, while employees of the Washington River Protection Solutions (WRPS) were performing procedure TO-630-001, "Obtain 242-A Feed and Slurry Samples" at the 242-A Evaporator facility, troubleshooting of an unexpected system response was initiated outside of the bounds of the procedure without a troubleshooting plan. When the 242-A Shift Manager recognized that they were performing work outside the bounds of the procedure the work was stopped.

The suspected cause of the unexpected system response was a plugged filter in the water line; a work package was developed to change the filter and the filter was changed out later that day.

On the following day, March 25, 2009, during performance of the same procedure, TO-630-001, the Office of River Protection (ORP) Facility Representative (FR) observed the operation of a valve in Section 5.3 of the

procedure that should have been performed in Section 5.1. The Facility Representative notified the WRPS Senior Supervisory Watchstander and work was stopped.

On March 27, 2009, upon further review, WRPS management determined this event should be reported as a Group 10, Management Concerns/Issues, (2) SC(4).

---

16. Is Subcontractor Involved? No

---

17. Operating Conditions of Facility at Time of Occurrence:

In Operations Mode.

---

18. Activity Category:

03 - Normal Operations (other than Activities specifically listed in this Category)

---

19. Immediate Actions Taken and Results:

On 3/25/2009, work was stopped and plant placed in safe configuration.

On 3/26/2009, a Red Arrow logbook entry made stating, "Do not Remove Admin Locks from AW-102 Feed Pump and PB-2 pump until Authorized to Restart by Scott Sax [Manager, Project Operations]."

---

20. ISM:

4) Perform Work Within Controls

---

21. Cause Code(s):

---

22. Description of Cause:

---

23. Evaluation (by Facility Manager/Designee):

---

24. Is Further Evaluation Required?: No

---

25. Corrective Actions
Local Tracking System Name: Problem Evaluation Request

---

26. Lessons Learned:

27. Similar Occurrence Report Numbers:

28. User-defined Field #1:

29. User-defined Field #2:

Problem Evaluation Request WRPS-PER-2009-0471

30. HQ Keyword(s):

31. HQ Summary:

32. DOE Facility Representative Input:

33. DOE Program Manager Input:

242-A CORRECTIVE ACTION PLAN

As a result of

Violation of Procedure TO-630-001 during Slurry Sampling at 242A Evaporator

March 24 and 25, 2009

Prepared by:

RP Raven, 242-A Facility Operations Manager

Washington River Protection Solutions LLC

April 6, 2009

INTRODUCTION

Ten issues of concerns were discussed between the Office of River Protection and the Washington River Protection Solutions (WRPS) management team as a result of a procedure violation while performing slurry sampling at 242-A Evaporator on March 24 and 25, 2009.

These ten issues of concern were:

1) Violation of TO-630-001, Obtain Feed and Slurry Samples at 242-A
2) Supervisors directing work outside of procedures
3) Configuration management of valve positions and post-maintenance testing
4) TO-630-001 "Obtain Feed and Slurry" procedure did not mention the HV-F2-2 valve
5) Technical Evaluation TE-08-039 described the HV-F2-2 and HV-F2-5 valves as being under "administrative lock."
6) Chain of Command issues between 242-A Facility Management personnel and Shift Operations personnel
7) Safety Equipment List (SEL)
8) Commercial Dedication Item Process
9) The work force's understanding of confinement boundaries
10) Notifications to management of the procedure violation were not timely

WRPS management has grouped these Concerns into three bins:

I. <u>Conduct of Operations Issues</u>

1) TO-630-001, Obtain Feed and Slurry Samples at 242-A
Procedure usage is governed by TFC-OPS-OPER-C-13, "Technical Procedure Control and Use" and is under the purview of Chapter 16 of DOE O 5480.19, "Conduct of Operations Requirements for DOE Facilities."

2) Supervisors directing work outside of procedures
This is also under Chapter 16 of DOE O 5480.19

3) Configuration management of valve positions and post-maintenance testing
This is covered under Chapter 2, "Shift Routines and Operations Practices" and Chapter 8, "Control of Equipment and System Status" of DOE O 5480.19.

6) Chain of Command issues between 242-A Evaporator facility management personnel and Shift Operations personnel

The description of the chain of command is described in "PLN-05, Conduct of Operations Implementation Plan."

9) The understanding of the work force of confinement boundaries
This was determined to be directly related to procedure compliance and performance of operations' procedures.

10) Notifications to management of the procedure violation which involved an unexpected system response and some of the precursor events were not timely
This issue was deemed related to Chapter 7, "Notifications" and performance expectations from management implemented in internal procedures such as TFC-OPS-OPER-CD-01, "Event Notification" and TFC-ESHQ-Q_C-C-01, "Problem Evaluation Request."

II. Engineering Issues

5) Management of Technical Evaluations and specifically TE-08-039 that described the HV-F2-2 and HV-F2-5 valves as being under "administrative Lock" instead of under "administrative control."
This process is governed by TFC-ENG-FACSUP-C-02, "Operability/Technical Evaluations."

7) Management of the Safety Equipment List (SEL)
The Configuration Management of the SEL is governed by Engineering through the ECN process.

8) The impact of the Commercial Dedication Process
This process is under the control of TFC-ENG-C-15, "Commercial Grade Item Upgrade Dedication."

III. Procedures

4) TO-630-001 "Obtain Feed and Slurry" did not mention HV-F2-2 valve
The owner of this procedure is the 242-A Facility Operations Manager

CORRECTIVE ACTION PLAN

I. Conduct of Operations Issues

Immediate Corrective Actions Taken:

- Shift personnel were briefed on the expectations of procedure usage by the Base Operations management. Discussion included
  - Procedure and work package adherence is a requirement to maintain compliance with DSA, plant configuration and the assumptions of the procedure such as confinement boundaries, identified hazards, and step sequence. (Issues 1, 2, 3 and 9)
  - Work activities require approval from the on-duty shift manager, such as procedures and/or work documents (also Issue 3)
  - The requirement to raise a concern to immediate management when system response is encountered during work or surveillance activities (Issue 6 and 10)

- Four Senior Supervisory Watchstanders (SSWs) overseeing the activities have been assigned to eight- hour rotating shifts to ensure strong focus is maintained on Conduct of Operations oversight and improvements is maintained through the 242-A Campaign. Eight hour shifts of SSWs do not coincide with the 12-hour 242-A Operation's shift schedule assuring that the SSWs will observe the performance of every shift.

- A red arrow was entered in the Base Operations Shift log to restrict removal of administrative locks on the feed and slurry pumps unless authorized by Scott Sax.

- The on-duty Shift Manager during the event was disqualified. As a part of his Personal Improvement Plan, he developed a "Lessons Learned" which he is currently presenting to his peers. Other personnel actions are pending.

- The role of 242-A Evaporator facility management staff was rolled down from the PLN-05, Conduct of Operations Implementation Plan into the Memorandum of Understanding (MOU) between 242-A and Tank Farms. The Conduct of Operations briefing addresses it and the Prejob Briefing form (A-6002-893) also covers discussion of the "Controlling Authority." The revision of the MOU will be issued on April 6, 2009.

II. Engineering Issues

Technical Evaluations in Support of 242-A Campaign:

Section 5.19 of RPP-39139, "242-A Evaporator Startup Report: Campaign 2009-01/2009-02 (AP105/AP-101 Feed/AP-104 Slurry)," identifies the Technical Evaluations (TEs) associated with this evaporator campaign. Recommended actions from these TEs were verified to be complete or were identified as not required prior to the operation of the 242-A facility. This includes the recommendation from TE-08-039 "Technical Evaluation of All Potential Waste Transfer Paths During Hot and Cold Run Operations from 242-A Evaporator System Including P-B-1 and P-B-2 Pumps, Recirculation Loop, and C-A-1 Vessel to the Tank Farms Transfer System" to remove the raw water tie-in to the slurry sampling line at valve HV-F2-2 and HV-F2-5, which was determined not to be required prior to operation of the 242-A facility.

Technical evaluation TE-08-039 was revised to remove the terminology of "administratively locked." The evaluation assumes that one or both of the valves would be inadvertently left in the open position resulting in backflow of slurry into the Raw Water line and does not credit the valve position for mitigation of the proposed accident. In addition, a review of other assumed operational conditions was conducted to ensure the validity of those assumptions. This review and the resulting changes are reflected in revision 3 of the technical evaluation.

Regarding the terminology of "administratively locked," the remaining technical evaluation recommendations were evaluated for similar generic terminology asserting an assumption that needed to be protected. For example, TE-08-050 "Technical Evaluation for Required Safety-Significant Waste Transfer Primary Piping System Pressure Relieving Devices to Protect DST Waste Transfer Safety SSCs" discusses the use of "Red locking ties" to ensure a valve is in the open

position. This is consistent with the operational configuration of the valve. The technical evaluations as a whole, take credit for safety management programs, radiological monitoring plans, or specific procedures (e.g. flushing activities).

Extent of Condition review will be performed on applicable 242-A TEs to ensure there are no additional assumptions made in the technical evaluation that need to be actively protected. TE's review are scheduled to be completed by April 9, 2009.

Additional actions include modifying the format of the technical evaluation to explicitly identify enabling assumptions used to draw conclusions.

Commercial Grade Item Dedication:

The following management directives have been issued and will remain in effect until the applicable procedures are revised to incorporate these requirements.

- TFC-MD-062, "Interim Direction with Revised Requirements for Procurement of Safety Significant SSCs and Commercial Grade Item Dedication"
- TFC-MD-063, "Procurement of Full, Enhanced or Commercial Quality Items Designated Safety Significant Not Procured From an Evaluated Supplier - Additional Signatures"
- TFC-MD-064, "NQA-1 Commercial Grade Item Definition"
- TFC-MD-065, "Point of Use Control of Safety Significant Items and Materials"

In addition, WRPS has arranged for Sequoia Consulting group to review our Commercial Grade Item Dedication (CGD) procedure and process to suggest modifications and establish a training course for WRPS staff.

Additional actions are identified in the Corrective Action Plan (CAP) for the CGD process. This CAP is currently being revised to implement additional actions in response to ORP surveillance report 09-ESQ-114 and the actions are being tracked separately.

Safety Equipment List (SEL):

When CHAMPS was first populated with the safety classification from the Safety Equipment List (SEL) implementation database in 2006, the safety classification of all equipment was set to General Service (GS), the SEL was then uploaded into CHAMPS updating the Safety Classification field for Safety Significant (SS) equipment and a one-for-one correlation review was performed. However, it is known that this has since degraded. Engineering is aware of the degradation and Bills of Material for replacement of equipment in the field are reviewed for the correct safety classification based on RPP-8792. Changes to RPP-8792 are controlled in accordance with TFC-ENG-DESIGN-C-06, "Engineering Change Control." It should be noted that procedure TFC-ENG-DESIGN-C-15, "Commercial Grade Item Upgrade Dedication," requires the use of RPP-8792 "Subsystem and Component Level Safety Equipment List For Tank Farm Safety Systems" to obtain the safety classification of a component, so the degradation of the CHAMPS database should not affect the upgrading process.

Currently, the identified errors have manifested themselves in one of two ways.

1. The database has not been updated when equipment has been removed from service or is no longer required to perform a safety function (e.g. the old transfer leak detection system) resulting in GS equipment being incorrectly identified as SS, or
2. During the 2006 population of the SEL in CHAMPS, some W-314 equipment (including portions of the transfer leak detection system and the AN and AW Primary Tank Ventilation systems) was set to GS since it was in project status and not yet officially part of the SEL. This error was not identified during turnover activities performed in 2008.

Interoffice memorandums WRPS-0900387, "Review of SS Components Installed After January 18, 2009" and WRPS-0900485, "Update – Review of SS Components Installed After January 18, 2009" detail the review of SS components installed since the Justification for Continued Operation. The CGI documentation generated meets the requirements of TFC-ENG-DESIGN-C-15 and TFC-MD-062.

Additional actions include correction of the CHAMPS database as identified in the Corrective Action Plan for Maintenance Programs being developed in response to ORP assessment A-09-AMENS-TANKFARM-001, and implementation of the DOE STD 3009 CN-3 and CGD upgrade processes which will include revising the SEL and reconciling the CHAMPS database to the SEL. These actions will be tracked separately.

III. Procedures

Immediate Corrective Actions Taken:

- TO-630-001, "Obtain Feed and Slurry Samples at 242-A" was inactivated on March 30, 2009. It will remain in "inactive" status until the revision is issued to April 6, 2009.
- Confirmed TO-600-010 "242-A Evaporator Initial Valving Verification" required valves HV-F2-2 and HV-F2-5 to be verified in the closed position.
- An extent of condition was completed on the following procedures; no technical errors were noted.
  - TO-600-030 Start Up 242-A Evaporator System
  - TO-600-040 Monitor 242-A Evaporator Operation
  - TO-600-055 Start Up and Shut Down 242-A Steam System
  - TO-600-060 Shut Down 242-A Evaporator System
  - TO-600-101 Perform Tank Farm Material Balance During Evaporator Operations

- TO-230-225 Evaporator Campaign Monitoring for 241-AW to 241-AP Transfer and Jetting Evaporator Pump Room Sump

- A review was completed by Facility Management of the observations written by Senior Supervisory Watchstanders for additional procedure non-compliances or findings that would prevent safe and compliant operations of 242-A. No technical issues were noted.

- A review was completed by Facility Management of the PERs generated since changing MODE on March 17, 2009 for additional procedure non-compliances or findings that would prevent safe and compliant operations of 242-A. No technical issues were noted.

- An investigation was performed to determine the necessary changes to TO-630-001

  - The configuration of the HV-F2-2 and HV-F2-5 was successfully determined by a planned entry in the Sampler Room on March 28, 2009 (work package TFC-WO-09-1191) and the valves were closed.

  - Caution tags (242-A-CT-09-07, Tag 1 and 2) were affixed to the valve handles of HV-F2-2 and HV-F2-5 to described the "as left" configuration from the March 28 entry on April 1.

  - TFC-WO-09-1417 was initiated to reliable the sampler consistent with the results of the March 28 entry (ECN-726299 issued March 31). It is scheduled to work on April 6, 2009.

- An additional configuration change needed was identified when check valves were verified in the raw water line to the sampler cabinet. ECN-726297 was issued (March 31, 2009) to correct the drawing.

Future Corrective Actions

Additional corrective actions have been identified for each Functional Area for future implementation.

I. <u>Conduct of Operations Issues</u>

- Follow-on briefings are planned for WRPS management, including first line management in field activities, such as Radiological Control, Operations Engineers, Industrial Hygiene, and Maintenance.

- Common Cause Analysis will be performed on similar events that include 244-CR, C-109 and S-102 with the focus on Conduct of Operations related causes and corrective actions. The results of this analysis will be evaluated for initial improvements and provided to the Conduct of Operations Council for their usage.

- The Conduct of Operations Council will use the analysis to develop a Conduct of Operations Improvement Plan designed to provide improvement initiatives for identified Con Ops focus areas. This improvement plan will be a living document, updated as necessary to identify new focus areas and initiatives to address those areas.

- **Engineering Issues**

- Actions for the 3009 CN-3 and CGD upgrades include revising the SEL, and then reconciling the CHAMPS database to the revised SEL.

- **Procedures**

  - Continue extent of condition reviews with less-frequently used procedures.
  - Continue timely communication between the SSWs and Facility Management to ensure any issues are readily addressed.
  - Incorporate any necessary changes and "Lessons Learned" into the 242-A training curriculum.
  - Review the 242-A procedures to determine best path forward for restructuring them.
  - Complete and implement an Engineering Change Notice (ECN) that removes legacy alarms from the Monitoring and Control System (MCS).
  - Review the human factors elements of the "At the Controls" area. Lighting, ergonomic stations and noise level need to be addressed.
  - Continue Life Cycle Planning for the facility to meet the mission requirements.

FINAL

Message

From: Maciuca, Constantin
Sent: Thursday, June 18, 2009 10:51 AM
To: Glaman, Linda
Subject: RE: WRPS-PER-2009-0471: Returned for Rework - Complete Apparent Cause process and documentation

Accept as is.

Thank you

Tino Maciuca, Manager
Performance Assurance & CAM
509-373-6334
509-438-9519 (cell)

From: Glaman, Linda
Sent: Thursday, June 18, 2009 10:34 AM
To: Maciuca, Constantin
Cc: Mata, Beth L
Subject: RE: WRPS-PER-2009-0471: Returned for Rework - Complete Apparent Cause process and documentation
Importance: High

Tino
I have received an urgent request to process this PER and launch the CA's from Beth Mata. What is the decision? Accept as is w/justification or request more information?

Thanks...As always, please call if you have questions

Linda RB Glaman
Operations Support Specialist/CAM
Turning 'round-n-'round downtown
539-2771

"The only stupid question is the one that remains unasked"

From: Glaman, Linda
Sent: Wednesday, June 17, 2009 10:50 AM
To: Maciuca, Constantin
Subject: FW: WRPS-PER-2009-0471: Returned for Rework - Complete Apparent Cause process and documentation

I have a problem and need your direction. The referenced PER was returned for rework with the comments in the email forwarded below. The response from the responsible manager was "Posted By: Raven, Rebecca P 06/16/2009 0945

Please launch corrective actions. I have made added a comment for each issue on the rework requested. The ACA and CAP have been previously submitted and accepted by ORP and no changes are possible. If there is a problem with the closure of this PER and the launch of the corrective actions I expect to be given the courtesy of a phone call so these issues can be discussed personally rather than just trashing the work without understanding it. I can be reached at 438-2821 24/7

every hour of every day..."

The results of my re-review are as follows...
The formal apparent cause analysis provided now is a two-step Why with no summary tying it to the 10 cause codes identified or 10 corrective actions initiated.
The safety significance still only addresses the "nuclear and industrial safety envelope" not the impact of the problem on employee safety and health, the environment or equipment as required by the procedure.
The Remedial Corrective Action entry still states that "Engineering issues with respect to the SEL are being tracked as part of an engineering CAP..." there is still no reference to how and/or where these actions are being tracked, what the actions are or who is doing them - None of which is a Remedial Action.
All this information should be entered with the Apparent Cause Analysis summary.

I did not "trash the work without understanding it" I performed my standard review against the PER and ACA procedure and process requirements and expectations and followed the same rework process/notification I use for all PERs I send back (I include the rework comments in an email that I send to the responsible manager and any act-as or delegates indicated on the TDR or in the comments). The resolution still does not meet these requirements and expectations. Here is a link to the PER

http://tfc.rl.gov/per/index.cfm?page=main.cfm&perid=29719&screen=6

Thanks...As always, please call if you have questions

Linda RB Glaman
Operations Support Specialist/CAM
Turning 'round-n-'round downtown
539-2771

"The only stupid question is the one that remains unasked"

From: Glaman, Linda
Sent: Monday, May 18, 2009 2:57 PM
To: Raven, Rebecca P (Bexa)
Subject: WRPS-PER-2009-0471: Returned for Rework - Complete Apparent Cause process and documentation
Importance: High

Returned for Rework: Complete Apparent Cause process and documentation

The screening team determined a formal apparent cause analysis needs to be performed for the resolution of this PER. The attachment "242A Apparent Cause Analysis 040109.docx" provides a detailed time line of the incidents leading to the initiation of the PER, but does not satisfy the formal apparent cause analysis requirement.
**Document the evaluation of this via a formal apparent cause analysis method and provide the resulting analysis either as an attachment or additional entry into the apparent cause analysis field.
**Upon completion of the formal Apparent Cause Analysis, enter the identified cause codes into the Causal Code field on the PER.
**A summary of the identified cause(s), linking them to the cause codes and corrective actions needs to be entered into the Causal Analysis,Apparent Cause and/or Root Cause Analysis field of the PER.

The current Safety Significance states that there are no TSR violations, however does not address the actual or potential impacts of the event to employee safety, the environment or equipment.

**Provide the actual or potential impacts of the event to employee safety, the environment or equipment.

The Remedial Corrective Action entry references the attached CAP and states unfinished actions assigned below. It also states that Engineering issues are being tracked as part of an Engineering CAP.
**Document the completed actions, who completed the action and when the action was completed and attach evidence of completion for each action that was finished during PER resolution.
**If the Engineering CAP is being documented via another PER, provide the additional PER's number.
**If the Engineering CAP is not being documented via another PER, and the actions are in response to this ORP identified issue; these actions need to be documented in this PER. The completed ones should be entered as Remedial Actions the same as the completed actions for the currently addressed CAP and the uncompleted actions need to be added as corrective actions.

Notes on Corrective Actions:
-The first action to Nancy Milliken to perform a Common Cause Analysis: Any corrective actions identified as a result of this Analysis needs to be either tracked as additional corrective actions to this PER or tracked as new PERs.
-The first action to Vikki Wagner to develop a lessons learned: Should include instructions to issue the lessons learned and require a listing of the recipients of the lessons learned.
-The action to Rebecca Raven to evaluate human factors: The tracking mechanism for recommendations need to be tracked and documented so it is retrievable with this PER.

Thanks...As always, please call if you have questions

Linda RB Glaman
Operations Support Specialist/CAM
376-1776/376-6249
2750E/A-208/R2-87
"The only stupid question is the one that remains unasked"

Message

From: Raven, Rebecca P (Bexa)
Sent: Thursday, July 02, 2009 2:26 PM
To: Mata, Beth L; ^WRPS Corrective Action Group
Subject: RE: WRPS-PER-2009-0471.2 CA Extension

Concur. Let's do it once, right!

RP Raven

242A Facilities
509-438-2821

From: Mata, Beth L
Sent: Thursday, July 02, 2009 1:04 PM
To: ^WRPS Corrective Action Group
Cc: Raven, Rebecca P (Bexa)
Subject: CA Extension
Importance: High

Task#	WRPS-PER-2009-0471.2
Subject	WRPS-PER-2009-0471; RES; Conduct follow-on Conduct of Operations Briefings for additional WRPS management, including first line management in field ac

Extend to: 7/17/09

Justification: In response to the ISMS Phase II Readiness assessment results, it is requested this briefing be postponed to allow inclusion of additional topics identified during ISMS Phase II review. The briefing material/subjects will be combined to allow facilitation of one briefing rather than two separate briefings. (Action is assigned to MN Brosee)

TOD Weekly for the Week of 3/23/09

FR Operational Oversight Activities:

- Observed Pre-Job Briefing and Field Work for U-109 HIP Removal
- Observed a Tabletop Exercise for the AP-101 to AW-102 Waste Transfer
- Reviewed DRAFT Tank Farm Emergency Action Levels (EALs)
- Evaluated NCO/OE TSR Level of Knowledge
- Investigated the 242-A sample cabinet valving
- Conducted oversight of 242-A Slurry Sampling
- Met with Engineering to Discuss Double Valve Isolation Testing
- Observed the installation of the corrosion probe in AY-102
- Evaluated Emergency Response to 222-S Building 2704-S Fire Alarm
- Investigated Diesel Spill Notification Actions Performed by Contractor
- Met with C-Farm Project Manager and SST Retrieval and Closure Manager
- Conducted walk down of the 242-A control room and 222-S lab

Items that will be included in the March report:

Strengths:

- Effective pre-job briefing shown in U-Farm Hose in Pipe Transfer Line (HIPTL) Removal Activity. (Sondag, 3/25/09)

- Emergency Response to 222-S Building 2704-S Fire Alarm. (Blanchard, 3/25/09)

Findings:

A "continuous use" procedure was violated two days in a row during slurry sampling at the 242-A Evaporator. (Williamson, 3/25/09)

Observations:

Contamination survey of worker's hands was not performed upon removal from the glove bag gloves. (Sondag, 3/25/09)

FR's on Special Assignments/Training/Leave:

- Ron Ciola is temporarily assigned to support efforts at the Pretreatment Engineering Platform
- Several FR's completed General Technical Base training. This effort is ongoing

TO-630-001 was violated while performing slurry sampling

Why

The Shift Manager did not recognize that the troubleshooting activity being performed was outside the procedure

Why

There is a culture of "fix it now" and troubleshooting on the fly at the facility due to the perceptions of the staff trying to keep the facility operating during process activities.

Why Analysis for PER-2009-0471: Less Than Adequate Conduct of Operations at 242A

Task# WRPS-PER-2009-0471.1

E-STARS[R] Report
Task Detail Report
08/06/2009 1709

TASK INFORMATION			
Task#	WRPS-PER-2009-0471.1		
Subject	WRPS-PER-2009-0471; RES; Develop initial Conduct of Operations Improvement Plan designed to impleme		
Parent Task#	WRPS-PER-2009-0471	**Status**	Open
Reference	WRPS-PER-2009-0471	**Due**	10/12/2009
Originator	^PER CAs	**Priority**	Medium
Originator Phone		**Category**	PER
Origination Date	06/23/2009 1425	**Generic1**	None
Remote Task#		**Generic2**	None
Deliverable	PER Review	**Generic3**	None
Class	None	**View Permissions**	Global
Instructions	*No Instructions*		

ROUTING LISTS		
1	Corrective Action	Active
	Develop initial Conduct of Operations Improvement Plan designed to implement improvement initiatives identified in Common Cause Analysis for ConOPS focus areas. Deliverable: Approved Conduct of Operations Improvement Plan and schedule RESPONSIBLE MANAGER: When this corrective action is complete, enter a closure statement in E-STARS and close the E-STARS subtask. Refer to the Problem Evaluation Request procedure TFC-ESHQ-Q-C-C-01, Section 4.4 for closure documentation requirements	
	• Reynolds, Tammy R - Assign - Awaiting Response - Due Date - 09/30/2009 0000 *Instructions:*	
	• Raven, Rebecca P - Review - Awaiting Response - Due Date - 10/04/2009 0000 *Instructions:*	
	• ^Independent Assessment Review - Review - Awaiting Response - Due Date - 10/09/2009 0000 *Instructions:* Independent Assessor Review	

ATTACHMENTS

Attachments

1. 242A Apparent Cause Analysis 040109.docx
2. CCA WRPS-PER-2009-0471.pdf
3. EIR-2009-007
4. EM-RP--WRPS-TANKFARM-2009-0005.htm
5. Link to PER
6. PER EXTENSION REQUEST.msg
7. PER-2009-0471 CAP with April 4 2009 Input.docx
8. RE_ WRPS-PER-2009-0471_ Returned for Rework - Complete Apparent Cause process and documentation.msg
9. RE_.msg
10. TOD Weekly for the Week of 3-23-09.doc
11. Why Analysis for PER-2009-0471.pdf

COMMENTS

Poster	^PER Coordinator (Owen, Annette) - 07/31/2009 1123
	Due Date Extension

Task# WRPS-PER-2009-0471.1

	Extend CA .1 to 9/30/09. Higher priority issues have overtaken completion of this action. FacRep concurs w/extending. A Owen for R Raven		

TASK DUE DATE HISTORY

Modified	07/31/2009 1124 - ^PER Coordinator	**New Due Date**	09/30/2009 0000
Modified	06/23/2009 1425 - ^PER CAs	**New Due Date**	08/11/2009 0000
Modified	06/23/2009 1425 - ^PER CAs	**New Due Date**	11/02/2009 0000

SUB TASK HISTORY

No Subtasks

-- end of report --

Message

From: Maciuca, Constantin

Sent: Thursday, June 18, 2009 10:51 AM

To: Glaman, Linda

Subject: RE: WRPS-PER-2009-0471: Returned for Rework - Complete Apparent Cause process and documentation

Accept as is.

Thank you

Tino Maciuca, Manager
Performance Assurance & CAM
509-373-6334
509-438-9519 (cell)

From: Glaman, Linda
Sent: Thursday, June 18, 2009 10:34 AM
To: Maciuca, Constantin
Cc: Mata, Beth L
Subject: RE: WRPS-PER-2009-0471: Returned for Rework - Complete Apparent Cause process and documentation
Importance: High

Tino
I have received an urgent request to process this PER and launch the CA's from Beth Mata. What is the decision? Accept as is w/justification or request more information?

Thanks...As always, please call if you have questions

Linda RB Glaman
Operations Support Specialist/CAM
Turning 'round-n-'round downtown
539-2771

"The only stupid question is the one that remains unasked"

From: Glaman, Linda
Sent: Wednesday, June 17, 2009 10:50 AM
To: Maciuca, Constantin
Subject: FW: WRPS-PER-2009-0471: Returned for Rework - Complete Apparent Cause process and documentation

I have a problem and need your direction. The referenced PER was returned for rework with the comments in the email forwarded below. The response from the responsible manager was "Posted By: Raven, Rebecca P 06/16/2009 0945

Please launch corrective actions. I have made added a comment for each issue on the rework requested. The ACA and CAP have been previously submitted and accepted by ORP and no changes are possible. If there is a problem with the closure of this PER and the launch of the corrective actions I expect to be given the courtesy of a phone call so these issues can be discussed personally rather than just trashing the work without understanding it. I can be reached at 438-2821 24/7

every hour of every day..."

The results of my re-review are as follows...
The formal apparent cause analysis provided now is a two-step Why with no summary tying it to the 10 cause codes identified or 10 corrective actions initiated.
The safety significance still only addresses the "nuclear and industrial safety envelope" not the impact of the problem on employee safety and health, the environment or equipment as required by the procedure.
The Remedial Corrective Action entry still states that "Engineering issues with respect to the SEL are being tracked as part of an engineering CAP..." there is still no reference to how and/or where these actions are being tracked, what the actions are or who is doing them - None of which is a Remedial Action.
All this information should be entered with the Apparent Cause Analysis summary.

I did not "trash the work without understanding it" I performed my standard review against the PER and ACA procedure and process requirements and expectations and followed the same rework process/notification I use for all PERs I send back (I include the rework comments in an email that I send to the responsible manager and any act-as or delegates indicated on the TDR or in the comments). The resolution still does not meet these requirements and expectations. Here is a link to the PER

http://tfc.rl.gov/per/index.cfm?page=main.cfm&perid=29719&screen=6

Thanks...As always, please call if you have questions

Linda RB Glaman
Operations Support Specialist/CAM
Turning 'round-n-'round downtown
539-2771

"The only stupid question is the one that remains unasked"

From: Glaman, Linda
Sent: Monday, May 18, 2009 2:57 PM
To: Raven, Rebecca P (Bexa)
Subject: WRPS-PER-2009-0471: Returned for Rework - Complete Apparent Cause process and documentation
Importance: High

Returned for Rework: Complete Apparent Cause process and documentation

The screening team determined a formal apparent cause analysis needs to be performed for the resolution of this PER. The attachment "242A Apparent Cause Analysis 040109.docx" provides a detailed time line of the incidents leading to the initiation of the PER, but does not satisfy the formal apparent cause analysis requirement.
**Document the evaluation of this via a formal apparent cause analysis method and provide the resulting analysis either as an attachment or additional entry into the apparent cause analysis field.
**Upon completion of the formal Apparent Cause Analysis, enter the identified cause codes into the Causal Code field on the PER.
**A summary of the identified cause(s), linking them to the cause codes and corrective actions needs to be entered into the Causal Analysis,Apparent Cause and/or Root Cause Analysis field of the PER.

The current Safety Significance states that there are no TSR violations, however does not address the actual or potential impacts of the event to employee safety, the environment or equipment.

**Provide the actual or potential impacts of the event to employee safety, the environment or equipment.

The Remedial Corrective Action entry references the attached CAP and states unfinished actions assigned below. It also states that Engineering issues are being tracked as part of an Engineering CAP.
**Document the completed actions, who completed the action and when the action was completed and attach evidence of completion for each action that was finished during PER resolution.
**If the Engineering CAP is being documented via another PER, provide the additional PER's number.
**If the Engineering CAP is not being documented via another PER, and the actions are in response to this ORP identified issue; these actions need to be documented in this PER. The completed ones should be entered as Remedial Actions the same as the completed actions for the currently addressed CAP and the uncompleted actions need to be added as corrective actions.

Notes on Corrective Actions:
-The first action to Nancy Milliken to perform a Common Cause Analysis: Any corrective actions identified as a result of this Analysis needs to be either tracked as additional corrective actions to this PER or tracked as new PERs.
-The first action to Vikki Wagner to develop a lessons learned: Should include instructions to issue the lessons learned and require a listing of the recipients of the lessons learned.
-The action to Rebecca Raven to evaluate human factors: The tracking mechanism for recommendations need to be tracked and documented so it is retrievable with this PER.

Thanks...As always, please call if you have questions

Linda RB Glaman
Operations Support Specialist/CAM
376-1776/376-6249
2750E/A-208/R2-87
"The only stupid question is the one that remains unasked"

Message

From: Parnell, William L (Bill)

Sent: Friday, July 31, 2009 8:42 AM

To: ^WRPS Corrective Action Group

Cc: Reynolds, Tammy R

Subject: PER EXTENSION REQUEST

Please extend Per WRPS 2009-0471.1 until 9/30/2009. This item was recently transferred from Pete Owen to Tammy Reynolds and any work that may have been previously performed to resolve this issue was not turned over. Time will be needed to coordinate the resolution of the action with the newly formed Con Ops Improvement Team and then issue the improvement plan.

Message

From: Williamson, Brandon I

Sent: Friday, July 31, 2009 11:29 AM

To: Raven, Rebecca P (Bexa)

Cc: Owen, Annette; Parnell, William L (Bill); Reynolds, Tammy R; Brosee, Neil; Gregory, Robert E (Rob)

Subject: RE:

That is correct. I concur.
I'd rather have it correct than fast.

From: Raven, Rebecca P (Bexa)
Sent: Friday, July 31, 2009 10:51 AM
To: Williamson, Brandon I
Cc: Owen, Annette; Parnell, William L (Bill); Reynolds, Tammy R; Brosee, Neil; Gregory, Robert E (Rob)
Subject:

Brandon:

Per our conversation, I understand I have your concurrence to extend the following actions of WRPS-PER-2009-0471 (242A Slurry Sample Procedure Violation) to August 31.

Thank you.

07/30/09	Gregory, Rob	WRPS-PER-2009-0471.10	WRPS-PER-2009-0471; RES; Common Caus corrective action CA-01: Assemble a w
07/31/09	Brosee, Neil	WRPS-PER-2009-0471.2	WRPS-PER-2009-0471; RES; Conduct follow- Briefings for additional WRPS manag
07/31/09	Reynolds, Tammy R	WRPS-PER-2009-0471.1	WRPS-PER-2009-0471; RES; Develop initial Improvement Plan designed to implement imp identified in Common Ca

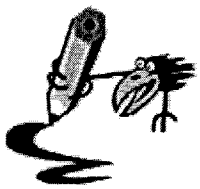

RP Raven
242A Facilities
509-438-2821
Note: I'll be on vacation from 8/6 to 8/24/2009

Task# WRPS-PER-2009-0471.2

E-STARS[R] Report
Task Detail Report
08/06/2009 1715

TASK INFORMATION			
Task#	WRPS-PER-2009-0471.2		
Subject	WRPS-PER-2009-0471; RES; Conduct follow-on Conduct of Operations Briefings for additional WRPS manag		
Parent Task#	WRPS-PER-2009-0471	**Status**	Open
Reference	WRPS-PER-2009-0471	**Due**	09/12/2009
Originator	^PER CAs	**Priority**	Medium
Originator Phone		**Category**	PER
Origination Date	06/23/2009 1425	**Generic1**	None
Remote Task#		**Generic2**	None
Deliverable	PER Review	**Generic3**	None
Class	None	**View Permissions**	Global
Instructions	*No Instructions*		

ROUTING LISTS

1	Corrective Action	Active
	Conduct follow-on Conduct of Operations Briefings for additional WRPS management, including first line management in field activities such as Radiological control, Operations, Engineering, Industrial Hygiene and Maintenance. Deliverable: Copy of Briefing and Attendance Rosters RESPONSIBLE MANAGER: When this corrective action is complete, enter a closure statement in E-STARS and close the E-STARS subtask. Refer to the Problem Evaluation Request procedure TFC-ESHQ-Q-C-C-01, Section 4.4 for closure documentation requirements	
	• Brosee, Neil - Assign - Awaiting Response - Due Date - 08/31/2009 0000 *Instructions:*	
	• Raven, Rebecca P - Review - Awaiting Response - Due Date - 09/04/2009 0000 *Instructions:*	
	• ^Independent Assessment Review - Review - Awaiting Response - Due Date - 09/09/2009 0000 *Instructions:* Independent Assessor Review	

ATTACHMENTS

Attachments

1. 242A Apparent Cause Analysis 040109.docx
2. CCA WRPS-PER-2009-0471.pdf
3. EIR-2009-007
4. EM-RP--WRPS-TANKFARM-2009-0005.htm
5. Link to PER
6. PER extension.msg
7. PER-2009-0471 CAP with April 4 2009 Input.docx
8. RE_ PER extension.msg
9. RE_ WRPS-PER-2009-0471_ Returned for Rework - Complete Apparent Cause process and documentation.msg
10. RE_ WRPS-PER-2009-0471_2 CA Extension.msg
11. RE_.msg
12. TOD Weekly for the Week of 3-23-09.doc
13. Why Analysis for PER-2009-0471.pdf

COMMENTS

Poster	^PER Coordinator (Glaman, Linda R) - 07/07/2009 0808

Task# WRPS-PER-2009-0471.2

	Due Date Extension
	extend CA .2 to 7-17-09 per attached email request. LBG 7-7-09 Extend to: 7/17/09 Justification: In response to the ISMS Phase II Readiness assessment results, it is requested this briefing be postponed to allow inclusion of additional topics identified during ISMS Phase II review. The briefing material/subjects will be combined to allow facilitation of one briefing rather than two separate briefings. (Action is assigned to MN Brosee) B Mata for MN Borsee, approvedd R Raven 7-2-09
Poster	^PER Coordinator (Owen, Annette) - 07/16/2009 0734
	Due Date Extension
	Extend CA 2 to 7/31/09. Additional time is required to complete the subject briefings. Additional time will allow disbursement to rotating shifts. (blm for mnb)/FacRep B Williamson concurs
Poster	^PER Coordinator (Owen, Annette) - 07/31/2009 1122
	Due Date Extension
	Extend CA .2 to 8/31/09. Higher priority issues have overtaken completion of this action. A Owen for R Raven

TASK DUE DATE HISTORY

Modified	07/31/2009 1122 - ^PER Coordinator	**New Due Date**	08/31/2009 0000
Modified	07/16/2009 0734 - ^PER Coordinator	**New Due Date**	07/31/2009 0000
Modified	07/07/2009 0808 - ^PER Coordinator	**New Due Date**	07/17/2009 0000
Modified	06/23/2009 1425 - ^PER CAs	**New Due Date**	07/11/2009 0000
Modified	06/23/2009 1425 - ^PER CAs	**New Due Date**	11/02/2009 0000

SUB TASK HISTORY

No Subtasks

-- end of report --

Message

From: Raven, Rebecca P (Bexa)
Sent: Thursday, July 02, 2009 2:26 PM
To: Mata, Beth L; ^WRPS Corrective Action Group
Subject: RE: WRPS-PER-2009-0471.2 CA Extension

Concur. Let's do it once, right!

RP Raven

242A Facilities
509-438-2821

From: Mata, Beth L
Sent: Thursday, July 02, 2009 1:04 PM
To: ^WRPS Corrective Action Group
Cc: Raven, Rebecca P (Bexa)
Subject: CA Extension
Importance: High

Task#	WRPS-PER-2009-0471.2
Subject	WRPS-PER-2009-0471; RES; Conduct follow-on Conduct of Operations Briefings for additional WRPS management, including first line management in field ac

Extend to: 7/17/09

Justification: In response to the ISMS Phase II Readiness assessment results, it is requested this briefing be postponed to allow inclusion of additional topics identified during ISMS Phase II review. The briefing material/subjects will be combined to allow facilitation of one briefing rather than two separate briefings. (Action is assigned to MN Brosee)

Message

From: Williamson, Brandon I

Sent: Friday, July 31, 2009 11:29 AM

To: Raven, Rebecca P (Bexa)

Cc: Owen, Annette; Parnell, William L (Bill); Reynolds, Tammy R; Brosee, Neil; Gregory, Robert E (Rob)

Subject: RE:

That is correct. I concur.
I'd rather have it correct than fast.

From: Raven, Rebecca P (Bexa)
Sent: Friday, July 31, 2009 10:51 AM
To: Williamson, Brandon I
Cc: Owen, Annette; Parnell, William L (Bill); Reynolds, Tammy R; Brosee, Neil; Gregory, Robert E (Rob)
Subject:

Brandon:

Per our conversation, I understand I have your concurrence to extend the following actions of WRPS-PER-2009-0471 (242A Slurry Sample Procedure Violation) to August 31.

Thank you.

07/30/09	Gregory, Rob	WRPS-PER-2009-0471.10	WRPS-PER-2009-0471; RES; Common Caus corrective action CA-01: Assemble a w
07/31/09	Brosee, Neil	WRPS-PER-2009-0471.2	WRPS-PER-2009-0471; RES; Conduct follow- Briefings for additional WRPS manag
07/31/09	Reynolds, Tammy R	WRPS-PER-2009-0471.1	WRPS-PER-2009-0471; RES; Develop initial Improvement Plan designed to implement imp identified in Common Ca

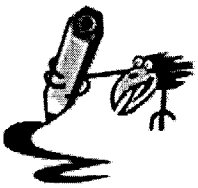

RP Raven
242A Facilities
509-438-2821
Note: I'll be on vacation from 8/6 to 8/24/2009

Message

From: Williamson, Brandon I
Sent: Thursday, July 16, 2009 7:12 AM
To: Mata, Beth L
Cc: Owen, Annette
Subject: RE: PER extension

I concur

From: Mata, Beth L
Sent: Wednesday, July 15, 2009 3:22 PM
To: Williamson, Brandon I
Cc: Owen, Annette
Subject: PER extension

Brandon,

Neil would like to extend WRPS-PER-2009-0471.2 to the end of July (currently due 7/17/09). Neil's plan is to include the results from the ISMS Phase II assessment into the Conduct of Operations Briefing. Please provide your concurrence on extension.

Thanks,
Beth

Task#	WRPS-PER-2009-0471.2
Subject	WRPS-PER-2009-0471; RES; Conduct follow-on Conduct of Operations Briefings for additional WRPS manag

Message

From: Raven, Rebecca P (Bexa)
Sent: Thursday, July 02, 2009 2:26 PM
To: Mata, Beth L; ^WRPS Corrective Action Group
Subject: RE: WRPS-PER-2009-0471.2 CA Extension

Concur. Let's do it once, right!

RP Raven

242A Facilities
509-438-2821

From: Mata, Beth L
Sent: Thursday, July 02, 2009 1:04 PM
To: ^WRPS Corrective Action Group
Cc: Raven, Rebecca P (Bexa)
Subject: CA Extension
Importance: High

Task#	WRPS-PER-2009-0471.2
Subject	WRPS-PER-2009-0471; RES; Conduct follow-on Conduct of Operations Briefings for additional WRPS management, including first line management in field ac

Extend to: 7/17/09

Justification: In response to the ISMS Phase II Readiness assessment results, it is requested this briefing be postponed to allow inclusion of additional topics identified during ISMS Phase II review. The briefing material/subjects will be combined to allow facilitation of one briefing rather than two separate briefings. (Action is assigned to MN Brosee)

Task# WRPS-PER-2009-0471.3

E-STARS[R] Report
Task Detail Report
08/06/2009 1720

TASK INFORMATION

Task#	WRPS-PER-2009-0471.3		
Subject	WRPS-PER-2009-0471; RES; Prepare Campaign 09-01/09-02 lessons learned. deliverable: Lessons Learned Report		
Parent Task#	WRPS-PER-2009-0471	**Status**	Open
Reference	WRPS-PER-2009-0471	**Due**	09/10/2009
Originator	^PER CAs	**Priority**	Medium
Originator Phone		**Category**	PER
Origination Date	06/23/2009 1425	**Generic1**	None
Remote Task#		**Generic2**	None
Deliverable	PER Review	**Generic3**	None
Class	None	**View Permissions**	Global
Instructions	*No Instructions*		

ROUTING LISTS

1	Corrective Action	Active
	Prepare Campaign 09-01/09-02 lessons learned. deliverable: Lessons Learned Report RESPONSIBLE MANAGER: When this corrective action is complete, enter a closure statement in E-STARS and close the E-STARS subtask. Refer to the Problem Evaluation Request procedure TFC-ESHQ-Q-C-C-01, Section 4.4 for closure documentation requirements	
	• Wagner, Vikki - Assign - Awaiting Response - Due Date - 08/30/2009 0000 *Instructions:*	
	• Raven, Rebecca P - Review - Awaiting Response - Due Date - 09/03/2009 0000 *Instructions:*	
	• ^Independent Assessment Review - Review - Awaiting Response - Due Date - 09/08/2009 0000 *Instructions:* Independent Assessor Review	

ATTACHMENTS

Attachments

1. 242A Apparent Cause Analysis 040109.docx
2. CCA WRPS-PER-2009-0471.pdf
3. EIR-2009-007
4. EM-RP--WRPS-TANKFARM-2009-0005.htm
5. Link to PER
6. PER-2009-0471 CAP with April 4 2009 Input.docx
7. RE_ WRPS-PER-2009-0471_ Returned for Rework - Complete Apparent Cause process and documentation.msg
8. TOD Weekly for the Week of 3-23-09.doc
9. Why Analysis for PER-2009-0471.pdf

COMMENTS

No Comments

TASK DUE DATE HISTORY

Modified	06/23/2009 1425 - ^PER CAs	**New Due Date**	09/10/2009 0000
Modified	06/23/2009 1425 - ^PER CAs	**New Due Date**	11/02/2009 0000

Task# WRPS-PER-2009-0471.3

SUB TASK HISTORY

No Subtasks

-- end of report --

Task# WRPS-PER-2009-0471.4

E-STARS[R] Report
Task Detail Report
08/06/2009 1721

TASK INFORMATION

Task#	WRPS-PER-2009-0471.4		
Subject	WRPS-PER-2009-0471; RES; Complete Extent of Conditions Reviews for less-frequently used 242-A Evaporator procedures. Deliverable: List of procedur		
Parent Task#	WRPS-PER-2009-0471	**Status**	Open
Reference	WRPS-PER-2009-0471	**Due**	10/07/2009
Originator	^PER CAs	**Priority**	Medium
Originator Phone		**Category**	PER
Origination Date	06/23/2009 1425	**Generic1**	None
Remote Task#		**Generic2**	None
Deliverable	PER Review	**Generic3**	None
Class	None	**View Permissions**	Global
Instructions	*No Instructions*		

ROUTING LISTS

1	Corrective Action	Active
	Complete Extent of Conditions Reviews for less-frequently used 242-A Evaporator procedures. Deliverable: List of procedures evaluated, review results and actions taken. RESPONSIBLE MANAGER: When this corrective action is complete, enter a closure statement in E-STARS and close the E-STARS subtask. Refer to the Problem Evaluation Request procedure TFC-ESHQ-Q-C-C-01, Section 4.4 for closure documentation requirements • Raven, Rebecca P - Assign - Awaiting Response - Due Date - 09/30/2009 0000 *Instructions:*	
	• ^Independent Assessment Review - Review - Awaiting Response - Due Date - 10/05/2009 0000 *Instructions:* Independent Assessor Review	

ATTACHMENTS

Attachments

1. 242A Apparent Cause Analysis 040109.docx
2. CCA WRPS-PER-2009-0471.pdf
3. EIR-2009-007
4. EM-RP--WRPS-TANKFARM-2009-0005.htm
5. Link to PER
6. PER-2009-0471 CAP with April 4 2009 Input.docx
7. RE_ WRPS-PER-2009-0471_ Returned for Rework - Complete Apparent Cause process and documentation.msg
8. TOD Weekly for the Week of 3-23-09.doc
9. Why Analysis for PER-2009-0471.pdf

COMMENTS

No Comments

TASK DUE DATE HISTORY

Modified	06/23/2009 1425 - ^PER CAs	**New Due Date**	10/07/2009 0000
Modified	06/23/2009 1425 - ^PER CAs	**New Due Date**	11/02/2009 0000

SUB TASK HISTORY

No Subtasks

-- end of report --

Task# WRPS-PER-2009-0471.6

E-STARS[R] Report
Task Detail Report
08/06/2009 1721

TASK INFORMATION

Task#	WRPS-PER-2009-0471.6		
Subject	WRPS-PER-2009-0471; RES; Evaluate 242-A Operating procedures and prepare plan for restructuring based on this event and lessons learned derived from o		
Parent Task#	WRPS-PER-2009-0471	**Status**	Open
Reference	WRPS-PER-2009-0471	**Due**	10/07/2009
Originator	^PER CAs	**Priority**	Medium
Originator Phone		**Category**	PER
Origination Date	06/23/2009 1425	**Generic1**	None
Remote Task#		**Generic2**	None
Deliverable	PER Review	**Generic3**	None
Class	None	**View Permissions**	Global
Instructions	*No Instructions*		

ROUTING LISTS

1	Corrective Action	Active
	Evaluate 242-A Operating procedures and prepare plan for restructuring based on this event and lessons learned derived from other corrective actions. Deliverable: Approved 242-A Procedure Improvement Plan and schedule RESPONSIBLE MANAGER: When this corrective action is complete, enter a closure statement in E-STARS and close the E-STARS subtask. Refer to the Problem Evaluation Request procedure TFC-ESHQ-Q-C-C-01, Section 4.4 for closure documentation requirements	
	• Raven, Rebecca P - Assign - Awaiting Response - Due Date - 09/30/2009 0000 *Instructions:*	
	• ^Independent Assessment Review - Review - Awaiting Response - Due Date - 10/05/2009 0000 *Instructions:* Independent Assessor Review	

ATTACHMENTS

Attachments

1. 242A Apparent Cause Analysis 040109.docx
2. CCA WRPS-PER-2009-0471.pdf
3. EIR-2009-007
4. EM-RP--WRPS-TANKFARM-2009-0005.htm
5. Link to PER
6. PER-2009-0471 CAP with April 4 2009 Input.docx
7. RE_ WRPS-PER-2009-0471_ Returned for Rework - Complete Apparent Cause process and documentation.msg
8. TOD Weekly for the Week of 3-23-09.doc
9. Why Analysis for PER-2009-0471.pdf

COMMENTS

No Comments

TASK DUE DATE HISTORY

Modified	06/23/2009 1425 - ^PER CAs	**New Due Date**	10/07/2009 0000
Modified	06/23/2009 1425 - ^PER CAs	**New Due Date**	11/02/2009 0000

SUB TASK HISTORY

No Subtasks

-- end of report --

Task# WRPS-PER-2009-0471.7

E-STARS[R] Report
Task Detail Report
08/06/2009 1721

TASK INFORMATION			
Task#	WRPS-PER-2009-0471.7		
Subject	WRPS-PER-2009-0471; RES; Remove legacy alarms from 242-A MCS Deliverable: Work completed ECNs		
Parent Task#	WRPS-PER-2009-0471	**Status**	Open
Reference	WRPS-PER-2009-0471	**Due**	10/11/2009
Originator	^PER CAs	**Priority**	Medium
Originator Phone		**Category**	PER
Origination Date	06/23/2009 1425	**Generic1**	None
Remote Task#		**Generic2**	None
Deliverable	PER Review	**Generic3**	None
Class	None	**View Permissions**	Global
Instructions	*No Instructions*		

ROUTING LISTS

1	Corrective Action	Active
	Remove legacy alarms from 242-A MCS Deliverable: Work completed ECNs RESPONSIBLE MANAGER: When this corrective action is complete, enter a closure statement in E-STARS and close the E-STARS subtask. Refer to the Problem Evaluation Request procedure TFC-ESHQ-Q-C-C-01, Section 4.4 for closure documentation requirements	
	• Winkelman, Wayne D - Assign - Awaiting Response - Due Date - 09/30/2009 0000 *Instructions:*	
	• Raven, Rebecca P - Review - Awaiting Response - Due Date - 10/04/2009 0000 *Instructions:*	
	• ^Independent Assessment Review - Review - Awaiting Response - Due Date - 10/09/2009 0000 *Instructions:* Independent Assessor Review	

ATTACHMENTS

Attachments

1. 242A Apparent Cause Analysis 040109.docx
2. CCA WRPS-PER-2009-0471.pdf
3. EIR-2009-007
4. EM-RP--WRPS-TANKFARM-2009-0005.htm
5. Link to PER
6. PER-2009-0471 CAP with April 4 2009 Input.docx
7. RE_ WRPS-PER-2009-0471_ Returned for Rework - Complete Apparent Cause process and documentation.msg
8. TOD Weekly for the Week of 3-23-09.doc
9. Why Analysis for PER-2009-0471.pdf

COMMENTS

No Comments

TASK DUE DATE HISTORY

Modified	06/23/2009 1425 - ^PER CAs	**New Due Date**	10/11/2009 0000
Modified	06/23/2009 1425 - ^PER CAs	**New Due Date**	11/02/2009 0000

Task# WRPS-PER-2009-0471.7

SUB TASK HISTORY

No Subtasks

-- end of report --

Task# WRPS-PER-2009-0471.8

E-STARS[R] Report
Task Detail Report
08/06/2009 1722

TASK INFORMATION			
Task#	WRPS-PER-2009-0471.8		
Subject	WRPS-PER-2009-0471; RES; Evaluate human factors elements of the "at controls" area. Lighting, ergonomic stations, and noise levels need to be		
Parent Task#	WRPS-PER-2009-0471	**Status**	Open
Reference	WRPS-PER-2009-0471	**Due**	10/07/2009
Originator	^PER CAs	**Priority**	Medium
Originator Phone		**Category**	PER
Origination Date	06/23/2009 1425	**Generic1**	None
Remote Task#		**Generic2**	None
Deliverable	PER Review	**Generic3**	None
Class	None	**View Permissions**	Global
Instructions	*No Instructions*		

ROUTING LISTS

1	Corrective Action	Active
	Evaluate human factors elements of the "at controls" area. Lighting, ergonomic stations, and noise levels need to be addressed as a minimum. Deliverable: Written summary of evaluation results, and recommended actions. Tracking mechanism for recommendations. RESPONSIBLE MANAGER: When this corrective action is complete, enter a closure statement in E-STARS and close the E-STARS subtask. Refer to the Problem Evaluation Request procedure TFC-ESHQ-Q-C-C-01, Section 4.4 for closure documentation requirements	
	• Raven, Rebecca P - Assign - Awaiting Response - Due Date - 09/30/2009 0000 *Instructions:*	
	• ^Independent Assessment Review - Review - Awaiting Response - Due Date - 10/05/2009 0000 *Instructions:* Independent Assessor Review	

ATTACHMENTS

Attachments

1. 242A Apparent Cause Analysis 040109.docx
2. CCA WRPS-PER-2009-0471.pdf
3. EIR-2009-007
4. EM-RP--WRPS-TANKFARM-2009-0005.htm
5. Link to PER
6. PER-2009-0471 CAP with April 4 2009 Input.docx
7. RE_ WRPS-PER-2009-0471_ Returned for Rework - Complete Apparent Cause process and documentation.msg
8. TOD Weekly for the Week of 3-23-09.doc
9. Why Analysis for PER-2009-0471.pdf

COMMENTS

No Comments

TASK DUE DATE HISTORY

Modified	06/23/2009 1425 - ^PER CAs	**New Due Date**	10/07/2009 0000
Modified	06/23/2009 1425 - ^PER CAs	**New Due Date**	11/02/2009 0000

Task# WRPS-PER-2009-0471.8

SUB TASK HISTORY

No Subtasks

-- end of report --

Task# WRPS-PER-2009-0471.9

E-STARS[R] Report
Task Detail Report
08/06/2009 1722

TASK INFORMATION			
Task#	WRPS-PER-2009-0471.9		
Subject	WRPS-PER-2009-0471; RES; Revise format requirements for Technical Evaluations to explicitly identify enabling assumptions. Deliverable: Revise TFC		
Parent Task#	WRPS-PER-2009-0471	**Status**	Open
Reference	WRPS-PER-2009-0471	**Due**	10/11/2009
Originator	^PER CAs	**Priority**	Medium
Originator Phone		**Category**	PER
Origination Date	06/23/2009 1425	**Generic1**	None
Remote Task#		**Generic2**	None
Deliverable	PER Review	**Generic3**	None
Class	None	**View Permissions**	Global
Instructions	*No Instructions*		

ROUTING LISTS

1	Corrective Action	Active
	Revise format requirements for Technical Evaluations to explicitly identify enabling assumptions. Deliverable: Revise TFC-ENG-FACSUP-C-02, Operability/Technical Evaluations RESPONSIBLE MANAGER: When this corrective action is complete, enter a closure statement in E-STARS and close the E-STARS subtask. Refer to the Problem Evaluation Request procedure TFC-ESHQ-Q-C-C-01, Section 4.4 for closure documentation requirements	
	• Roberts, Mark A - Assign - Awaiting Response - Due Date - 09/30/2009 0000 *Instructions:*	
	• Raven, Rebecca P - Review - Awaiting Response - Due Date - 10/04/2009 0000 *Instructions:*	
	• ^Independent Assessment Review - Review - Awaiting Response - Due Date - 10/09/2009 0000 *Instructions:* Independent Assessor Review	

ATTACHMENTS

Attachments

1. 242A Apparent Cause Analysis 040109.docx
2. CCA WRPS-PER-2009-0471.pdf
3. EIR-2009-007
4. EM-RP--WRPS-TANKFARM-2009-0005.htm
5. Link to PER
6. PER-2009-0471 CAP with April 4 2009 Input.docx
7. RE_ WRPS-PER-2009-0471_ Returned for Rework - Complete Apparent Cause process and documentation.msg
8. TOD Weekly for the Week of 3-23-09.doc
9. Why Analysis for PER-2009-0471.pdf

COMMENTS

No Comments

TASK DUE DATE HISTORY

Modified	06/23/2009 1425 - ^PER CAs	**New Due Date**	10/11/2009 0000

Task# WRPS-PER-2009-0471.9

Modified	06/23/2009 1425 - ^PER CAs	**New Due Date**	11/02/2009 0000

SUB TASK HISTORY

No Subtasks

-- end of report --

Task# WRPS-PER-2009-0471.10

E-STARS[R] Report
Task Detail Report
08/06/2009 1722

TASK INFORMATION			
Task#	WRPS-PER-2009-0471.10		
Subject	WRPS-PER-2009-0471; RES; Common Cause Analysis identified corrective action CA-01: Assemble a w		
Parent Task#	WRPS-PER-2009-0471	**Status**	Open
Reference	WRPS-PER-2009-0471	**Due**	09/11/2009
Originator	^PER CAs	**Priority**	Medium
Originator Phone		**Category**	PER
Origination Date	06/23/2009 1425	**Generic1**	None
Remote Task#		**Generic2**	None
Deliverable	PER Review	**Generic3**	None
Class	None	**View Permissions**	Global
Instructions	*No Instructions*		

ROUTING LISTS

1	Corrective Action	Active
	Common Cause Analysis identified corrective action CA-01: Assemble a worker-level team to evaluate the active human errors (event "triggers") associated with the events described in CCA report for LTA Conduct of Operations at 242-A. Include an evaluation of "last-line-of-defense" tools/techniques used to prevent active human errors. Provide recommendations to the Conduct of Operations Council on tools, techniques, etc. that, if strengthened or implemented, will aid in the prevention of future similar events. The team should include a cross-organizational representation of Bargaining Unit personnel, First Line Managers, and Operations Engineers. Deliverable: Summary of suggestions/discussion topics. Evidence of transmittal to Conduct of Operations council. RESPONSIBLE MANAGER: When this corrective action is complete, enter a closure statement in E-STARS and close the E-STARS subtask. Refer to the Problem Evaluation Request procedure TFC-ESHQ-Q-C-C-01, Section 4.4 for closure documentation requirements	
	• Gregory, Rob - Assign - Awaiting Response - Due Date - 08/31/2009 0000 *Instructions:*	
	• Raven, Rebecca P - Review - Awaiting Response - Due Date - 09/04/2009 0000 *Instructions:*	
	• ^Independent Assessment Review - Review - Awaiting Response - Due Date - 09/08/2009 0000 *Instructions:* Independent Assessor Review	

Task# WRPS-PER-2009-0471.10

ATTACHMENTS

Attachments	1. 242A Apparent Cause Analysis 040109.docx 2. CCA WRPS-PER-2009-0471.pdf 3. EIR-2009-007 4. EM-RP--WRPS-TANKFARM-2009-0005.htm 5. FW_ Corrective Action Extension.msg 6. Link to PER 7. PER extensions.msg 8. PER-2009-0471 CAP with April 4 2009 Input.docx 9. RE_ PER extensions.msg 10. RE_ WRPS-PER-2009-0471_ Returned for Rework - Complete Apparent Cause process and documentation.msg 11. RE_.msg 12. TOD Weekly for the Week of 3-23-09.doc 13. Why Analysis for PER-2009-0471.pdf

COMMENTS

Poster	^PER Coordinator (Owen, Annette) - 07/15/2009 1419
	Due Date Extension
	Extend CA 10 per request. : A Facilitator has been contracted to lead the worker-level team. The team is scheduled to meet on 7/23 and the results will be documented in a report the following week. Extend to 7/30 to allow team meeting and results compilation.B Mata for R Raven
Poster	^PER CAs (Glaman, Linda R) - 07/27/2009 1025
	edit ESTARS due date to match PER CA extension. LBG 7-27-09
Poster	^PER Coordinator (Owen, Annette) - 07/31/2009 1121
	Due Date Extension
	Extend CA .10 to 8/31/09. Higher priority issues have overtaken completion of this action. A Owen for R Raven

TASK DUE DATE HISTORY

Modified	07/31/2009 1122 - ^PER Coordinator	**New Due Date**	08/31/2009 0000
Modified	07/27/2009 1023 - ^PER CAs (Glaman, Linda R)	**New Due Date**	08/11/2009 0000
Modified	07/15/2009 1444 - ^PER CAs (Owen, Annette)	**New Due Date**	07/28/2009 0000
Modified	07/15/2009 1419 - ^PER Coordinator	**New Due Date**	07/30/2009 0000
Modified	06/23/2009 1425 - ^PER CAs	**New Due Date**	07/31/2009 0000
Modified	06/23/2009 1425 - ^PER CAs	**New Due Date**	11/02/2009 0000

SUB TASK HISTORY

No Subtasks

-- end of report --

Message

From: Williamson, Brandon I

Sent: Friday, July 31, 2009 11:29 AM

To: Raven, Rebecca P (Bexa)

Cc: Owen, Annette; Parnell, William L (Bill); Reynolds, Tammy R; Brosee, Neil; Gregory, Robert E (Rob)

Subject: RE:

That is correct. I concur.
I'd rather have it correct than fast.

From: Raven, Rebecca P (Bexa)
Sent: Friday, July 31, 2009 10:51 AM
To: Williamson, Brandon I
Cc: Owen, Annette; Parnell, William L (Bill); Reynolds, Tammy R; Brosee, Neil; Gregory, Robert E (Rob)
Subject:

Brandon:

Per our conversation, I understand I have your concurrence to extend the following actions of WRPS-PER-2009-0471 (242A Slurry Sample Procedure Violation) to August 31.

Thank you.

07/30/09	Gregory, Rob	WRPS-PER-2009-0471.10	WRPS-PER-2009-0471; RES; Common Caus corrective action CA-01: Assemble a w
07/31/09	Brosee, Neil	WRPS-PER-2009-0471.2	WRPS-PER-2009-0471; RES; Conduct follow- Briefings for additional WRPS manag
07/31/09	Reynolds, Tammy R	WRPS-PER-2009-0471.1	WRPS-PER-2009-0471; RES; Develop initial Improvement Plan designed to implement imp identified in Common Ca

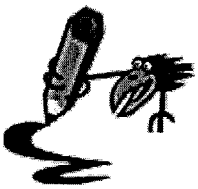

RP Raven
242A Facilities
509-438-2821
Note: I'll be on vacation from 8/6 to 8/24/2009

Message

From: Mata, Beth L

Sent: Tuesday, July 14, 2009 8:42 AM

To: ^WRPS Corrective Action Group

Cc: Gregory, Robert E (Rob); Raven, Rebecca P (Bexa)

Subject: PER extensions

Task#	WRPS-PER-2009-0891
Subject	PIE; WORK EXECUTION LTA (S-EM-62 OP.1 SO-1-1)

Extend to: 8/3/09
Justification: The PER owner is meeting with the Maintenance Manager and Work Control Program owner to discuss path forward for resolving the issues identified in the PER. Extend due date to allow brainstorming session and development of path forward.

Task#	WRPS-PER-2009-0471.10
Subject	WRPS-PER-2009-0471; RES; Common Cause Analysis identified corrective action CA-01: Assemble a worker-level team to evaluate the active human error

Extend to: 7/30/09
Justification: A Facilitator has been contracted to lead the worker-level team. The team is scheduled to meet on 7/23 and the results will be documented in a report the following week. Extend to 7/30 to allow team meeting and results compilation.

Message

From: Williamson, Brandon I
Sent: Thursday, July 16, 2009 8:32 AM
To: Owen, Annette
Subject: RE: PER extensions

I concur

From: Owen, Annette
Sent: Thursday, July 16, 2009 7:40 AM
To: Williamson, Brandon I
Subject: FW: PER extensions
Importance: High

Brandon,
As the FacRep, I need your concurrence to extend this action. If you have questions, please contact Beth Mata.

Thank you,
Annette Owen

From: Mata, Beth L
Sent: Tuesday, July 14, 2009 8:42 AM
To: ^WRPS Corrective Action Group
Cc: Gregory, Robert E (Rob); Raven, Rebecca P (Bexa)
Subject: PER extensions

Task#	WRPS-PER-2009-0471.10
Subject	WRPS-PER-2009-0471; RES; Common Cause Analysis identified corrective action CA-01: Assemble a worker-level team to evaluate the active human error

Extend to: 7/30/09
Justification: A Facilitator has been contracted to lead the worker-level team. The team is scheduled to meet on 7/23 and the results will be documented in a report the following week. Extend to 7/30 to allow team meeting and results compilation.

Message

From: Mata, Beth L

Sent: Thursday, July 23, 2009 10:29 AM

To: ^WRPS Corrective Action Group

Subject: FW: Corrective Action Extension

Please extend the following action. Extension has been communicated to ORP Facility Reps.

From: Gregory, Robert E (Rob)
Sent: Tuesday, July 21, 2009 10:52 AM
To: Williamson, Brandon I; Sorensen, R C (Chris); Ciola, Ronald J
Cc: Mata, Beth L; Harkins, Brian A; Brosee, Neil
Subject: RE: Corrective Action Extension

Brandon, Chris, Ron,

You are obviously more than welcome to attend the Con Op's improvement workshop. The goal of the workshop is to get worker input on how we (WRPS) can improve Con Op's. I am interested in worker input on both what's working and what they would change. The input from the workshop will be provide to the Con Op's Council for review and potential development of improvement actions.

Let me know if one or more of you are interested in attending and I will make sure I get it on your calendar.

Rob

From: Mata, Beth L
Sent: Tuesday, July 21, 2009 10:16 AM
To: Williamson, Brandon I
Cc: Gregory, Robert E (Rob)
Subject: Corrective Action Extension

Brandon,

The following corrective action was generated as part of the Common Cause Analysis performed on the 242-A Slurry Sample event. A Facilitator and multi-disciplined team has been established and is scheduled to meet on Thursday, 7/23/09. We are requesting extension of the action to 7/31/09 to allow documentation and transmittal of the results to the ConOps Council. Please provide your concurrence to extend the action below:

Task#	WRPS-PER-2009-0471.10

Assemble a worker-level team to evaluate the active human errors (event "triggers") associated with the events described in CCA report for LTA Conduct of Operations at 242-A. Include an evaluation of "last-line-of-defense" tools/techniques used to prevent active human errors. Provide recommendations to the Conduct of Operations Council on tools, techniques, etc. that, if strengthened or implemented, will aid in the prevention of future similar events.

The team should include a cross-organizational representation of Bargaining Unit personnel, First Line Managers, and Operations Engineers.

Deliverable: Summary of suggestions/discussion topics. Evidence of transmittal to Conduct of Operations council.

Save

Problem Evaluation Request (PER)

WRPS-PER-2009-0472
In Process/Work

PER No	Date of Discovery	Time of Discovery (24:00)	Project
WRPS-PER-2009-0472	03/27/2009	10:00	Procurement

Location

All Tank Farms

How Was Problem Discovered

Independent Assessment

Description of Concern or Problem

An Independent Assessment of Subcontract Management and Oversight was conducted from February 23 through March 5, 2009. The assessment resulted in six findings and sixteen observations. Details are provided in the attached assessment report.

Finding SO-F1 Programmatic ownership and responsibility for success of the subcontract oversight function have not been established. Guiding Principle 1 of RPP-MP-003, Integrated Environment, Safety, and Health Management System Description for the Tank Farm Operations Contractor, establishes expectations for processes to provide clear roles and responsibilities.

Requirement Not Satisfied	Source Document Number
Guiding Principle 1 of RPP-MP-003	FY2009-WRPS-I-0002
Equipment Identification Number	**System Identification**

Immediate actions Taken or Planned

Discussed the issue with the Manager, ESH&Q.

Recommended Corrective actions

Recommend assignment to F Beranek as a PER/RES.

Originator Contact

No

Originators Name	Originators ID	Originators Phone	Date Initiated
Flasch, Michael P	H5610828	(509) 373-4473	03/27/2009

SHIFT OPERATIONS REVIEW

Title

Independent Assessment of Subcontract Management and Oversight - Finding SO-F1

How Discovered	Agency
self-ID prior to event	

Reportability	SSC Operability	Operability Review	Comp Measures Req
Non-Reportable	N/A	N/A	

Describe actions Taken or Recommended

No additional actions taken or recommended by BO SSM

SO Reviewer Name	SO Reviewer ID	SO Reviewer Phone	SO Review Date
Malhan, Rakesh	H0046812	(509) 373-2689	03/27/2009

SCREENING

PER Significance Level			
PER with Resolution			
Independent Assessment Review	**Occurrence Report Number**	**Externally Identified**	
Yes		No	
Assigned Responsible Manager	**Facilities Rep / SSO**	**Safety Management Rep**	
Beranek, Fred			

Program		Safety Management Program	
• N/A		• ^N/A^	
PER Screening Comments			
PER w/ Res with informal Apparent Cause Analysis. (Nancy Brown 03/30/09)			
Causal Code			
A4B5C06	Management Problem Change Management LTA Personnel/department interactions not considered		
MGT/Comm/Train	**Human Performance**	**GEMS**	**Equip/Eng/Other**
Failed Barrier	**ORPS Code**	**Functional Area**	**Work Process**
	Not Applicable	Contract Management/Supplier Oversight	• Assessments • Subcontract Administration • Subcontractor Oversight
ISMS	**Consequence Code**		
Perform work within the controls	• Communications - Inadequate communications, roles, responsibilities		
PER Screening Chair	**PER Screening Chair ID**	**PER Screening Chair Phone**	**PER Screening Date**
Brown, Nancy L	H0088797	(509) 373-0992	03/30/2009
PAAA REVIEW			
PAAA Screening	**PAAA Codes**	**Function Codes**	
PAAA, Non-NTS Reportable	• 10 CFR 830.122 (a)(1)	• Other Management Program/Process	
NTS Report Number	**NTS Report Date**		
Repetitive / Recurrent	**Programmatic**	**Intentional Violation / Misrepresentation**	
No	No	No	
PAAA Screening Comments			
PAAA Reviewer Name	**PAAA Review Date**		
Waters, Shaun F	03/30/2009		
PAAA Approver Name	**PAAA Approve Date**		
Anderson, Craig E	04/01/2009		
CAUSE ANALYSIS			
Description of Occurrence			
Programmatic ownership and responsibility for success of the subcontract oversight function have not been established.			
Extent of Condition			
This procedure is one that all the ESH&Q disciplines participate in. This is the only procedure within ESHQ where each discipline has an active role in defining their plan for subcontractor oversight. Other procedures are owned by one discipline.			
Safety Significance			
Program ownership was missing and the strength of the program and deviation from expectations from the various ESHQ disciplines was evidenced in the Subcontract Management and Oversight Assessment.			
Generic Implications			
Remedial Corrective Action			
The listing of Administrative Document Owners on the Procedure Web Page was changed to Fred Beranek as Functional Area			

Manager.

Causal Analysis, Apparent Cause and/or Root Cause Analysis

A Why analysis was completed to understand how the Facility Area Manager (FAM) of the Subcontractor Oversight Program had changed from a Level 1 Manager to a Level 3 manager, a manager that had responsibility for only one of the 5 disciplines in this combined procedure. Due to organizational changes, and early release of the Level 1 Manager under the previous contractor and ensure continuity of the procedure the FAM of the procedure owner was listed in the Administrative Document Owners listing. During transition the necessity to change the the FAM was not caught. To ensure this doesn't happen again, not only the listing is changed but the procedure now states that the responsibility for the Subcontractor Oversight Program and the establishing of ownership and clear roles and responsibilities within the ESHQ organization is the the responsibility of the ESHQ Manager.

ATTACHMENTS

Link to PER

RE_ PER2009-472_ 0474_ 0476.msg

RE_ WRPS-PER-2009-0472 Extension Request.msg

Subcontractor Mgt Oversight IA Report.pdf

TFC-ESHQ-S_SAF-C-07, Subcontractor Oversigh06 09 09t.doc

WHY Analysis Sub Oversight.doc

AUDIT HISTORY

Change Date	Auditor	Comments
03/30/2009 08:18	Owen, Annette	'Source Document Number Available' was changed.
03/31/2009 08:19	Brown, Nancy L	Responsible Manager Task Launched by Brown, Nancy L
05/06/2009 13:07	Brown, Nancy L	'SMP Owner' was changed.
05/06/2009 14:03	Glaman, Linda R	'Screening Safety Managemnt Program' was removed - SMP incorrectly identified. L Glaman at the request of M Silvia

-- End of Report --
08/06/2009 05:30 PM

Task# WRPS-PER-2009-0472

E-STARS[R] Report
Task Detail Report
08/06/2009 1730

TASK INFORMATION			
Task#	WRPS-PER-2009-0472		
Subject	RES; Independent Assessment of Subcontract Management and Oversight - Finding SO-F1		
Parent Task#		**Status**	Open
Reference		**Due**	08/25/2009
Originator	^PER Coordinator	**Priority**	Medium
Originator Phone		**Category**	PER
Origination Date	03/27/2009 1038	**Generic1**	None
Remote Task#		**Generic2**	None
Deliverable	PER Review	**Generic3**	None
Class	None	**View Permissions**	Global
Instructions	*No Instructions*		

ROUTING LISTS

1	Responsible Manager	Active
	Review the PER Screening Tab and Senior Manager Review for requested data. Complete the task in E-STARS in accordance with TFC-ESHQ-Q_C-C-01, and TFC-ESHQ-Q_ADM-C-12 Apparent Cause Analysis & Corrective Action Planning.	
	• Beranek, Fred - Assign - Completed with comments - 06/11/2009 1511 *Instructions:*	
	• Beranek, Fred - Assign - Completed with comments - 07/21/2009 0713 *Instructions:* Based on a Subcontractor Oversight Workshop held on 6/30/2009 the response to the PER is no longer accuarate.	
	• ^Independent Assessment Review(Penick, Lee R) - Review - Concur - 07/22/2009 0941 *Instructions:* Independent Assessor Review	
	• Van Meighem, Jeff S - Review - Withdrawn - 05/06/2009 1307 *Instructions:* Safety Management Representative Review	
2	Review Initial PER	Inactive
	Review New PER	
	• ^SO(Malhan, Rakesh) - Review - Concur - 03/27/2009 1537 *Instructions:*	
	• ^PER Screening(Brown, Nancy L) - Review - Concur - 03/30/2009 1355 *Instructions:*	
	• ^Mgr Review - Review - Cancelled - 03/31/2009 0819 *Instructions:*	

ATTACHMENTS

Attachments	1. Link to PER 2. RE_ PER2009-472_ 0474_ 0476.msg 3. RE_ WRPS-PER-2009-0472 Extension Request.msg 4. Subcontractor Mgt Oversight IA Report.pdf 5. TFC-ESHQ-S_SAF-C-07, Subcontractor Oversigh06 09 09t.doc 6. WHY Analysis Sub Oversight.doc

COMMENTS

Task# WRPS-PER-2009-0472

Poster	^PER Coordinator (Glaman, Linda R) - 05/07/2009 1300
	1st Extension Request to 6-15-09 per attached email request. LBG 5-9-09
	The Manager is working the PERs however more time is need to ensure proper assignments and completion of requirements. Further extensions will be based on progress on the assignment of PER to responsible party for actions, completion of the cause analysis, and development of corrective actions by 06/15/2009. T Bowman for F Beranek 5-9-09 The extension is approved please include comment. M Silvia for C Maciuca 5-9-09
Poster	Beranek, Fred (Bowman, Tami A) - 06/11/2009 1511
	Completed
	A Why analysis was completed to understand how the Facility Area Manager (FAM) of the Subcontractor Oversight Program had changed from a Level 1 Manager to a Level 3 manager, a manager that had responsibility for only one of the 5 disciplines in this combined procedure. Due to organizational changes, and early release of the Level 1 Manager under the previous contractor and ensure continuity of the procedure the FAM of the procedure owner was listed in the Administrative Document Owners listing. During transition the necessity to change the the FAM was not caught. To ensure this doesn't happen again, not only the listing is changed but the procedure now states that the responsibility for the Subcontractor Oversight Program and the establishing of ownership and clear roles and responsibilities within the ESHQ organization is the the responsibility of the ESHQ Manager. Action complete Calderon/Bowman 06/11/2009
Poster	^PER Coordinator (Glaman, Linda R) - 07/07/2009 0811
	2nd extension to 8-17-09 per attached email. LBG 7-7-09
	Please extend the above referenced PERs as follows: RM Fred Beranek Due 06/15/2009 Extend 08/17/2009 Resolution is pending based on the outcome of the Subcontract Oversight meetings Tami Bowman for F Beranek 7-2-09 approved B Brown for T Maciuca 7-2-09
Poster	Beranek, Fred (Bowman, Tami A) - 07/21/2009 0713
	Completed
	Action complete, see previous comments. Bowman 07/21/09

TASK DUE DATE HISTORY

Modified	07/07/2009 0810 - ^PER Coordinator (Glaman, Linda R)	**New Due Date**	08/25/2009 1630
Modified	05/07/2009 1258 - ^PER Coordinator (Glaman, Linda R)	**New Due Date**	06/23/2009 1630
Modified	05/07/2009 1257 - ^PER Coordinator (Glaman, Linda R)	**New Due Date**	06/19/2009 1630
Modified	03/31/2009 0819 - ^PER Coordinator	**New Due Date**	05/19/2009 1630
Modified	03/31/2009 0819 - ^PER Coordinator	**New Due Date**	05/11/2009 1630
Modified	03/27/2009 1038 - ^PER Coordinator	**New Due Date**	03/29/2009 1630

SUB TASK HISTORY

Task# WRPS-PER-2009-0472		
Subtask#	WRPS-PER-2009-0472.1	
Subject	RES; Independent Assessment of Subcontract Management and Oversight - Finding SO-F1	
Originator	Beranek, Fred (Bowman, Tami A)	
	Routing List	*No Active Routing List*

-- end of report --

Message

From: Brown, Robert L
Sent: Thursday, July 02, 2009 3:24 PM
To: ^WRPS Corrective Action Group
Subject: RE: PER2009-472, 0474, 0476

We need to extend these.

From: ^WRPS Corrective Action Group
Sent: Thursday, July 02, 2009 2:11 PM
To: ^WRPS Corrective Action Group; Brown, Robert L
Cc: Beranek, Fred; Bowman, Tamara
Subject: RE: PER2009-472, 0474, 0476
Importance: High

All the subject PERs have been completed and returned for rework by the IA reviewer. This would be the 2nd extension, making the PERs 146 days old at resolution completion.

Thanks...As always, please call if you have questions

Linda RB Glaman
Operations Support Specialist/CAM
376-1776/376-6249
2750E/A-208/R2-87

The Lone CAM-mer

From: Bowman, Tamara
Sent: Thursday, July 02, 2009 2:02 PM
To: ^WRPS Corrective Action Group
Cc: Beranek, Fred
Subject: PER2009-472, 0474, 0476

Please extend the above referenced PERs as follows:

RM Fred Beranek

Due 06/15/2009

Extend 08/17/2009

Resolution is pending based on the outcome of the Subcontract Oversight meetings

Tami Bowman

"Safety - Our Way of Life"
W- 509-372-0031
C- 509-438-5268
Fax- 509-373-2715

Message

From: Silvia, Michael J (Mike)
Sent: Thursday, May 07, 2009 11:32 AM
To: ^WRPS Corrective Action Group; Maciuca, Constantin
Cc: Bowman, Tamara; Beranek, Fred
Subject: RE: WRPS-PER-2009-0472 Extension Request

The Manager is working the PERs however more time is need to ensure proper assignments and completion of requirements. Further extensions will be based on progress on the assignment of PER to responsible party for actions, completion of the cause analysis, and development of corrective actions by 06/15/2009.

The extension is approved please include comment.

Mike

From: ^WRPS Corrective Action Group
Sent: Thursday, May 07, 2009 10:26 AM
To: Silvia, Michael J (Mike); Maciuca, Constantin
Subject: FW: PER Extensions
Importance: High

The following PER with Resolution extension requests have been received, see message below...

WRPS-PER-2009-0472: 1st extension; currently due 5-11; no resolution information.
WRPS-PER-2009-0473: 1st extension; currently due 5-11; no resolution information.
WRPS-PER-2009-0474: 1st extension; currently due 5-11; no resolution information.
WRPS-PER-2009-0476: 1st extension; currently due 5-11; no resolution information.
WRPS-PER-2009-0477: 1st extension; currently due 5-11; no resolution information.

Thanks...As always, please call if you have questions

Linda RB Glaman
Operations Support Specialist/CAM
376-1776/376-6249
2750E/A-208/R2-87

"The only stupid question is the one that remains unasked"

From: Bowman, Tamara
Sent: Thursday, May 07, 2009 8:57 AM
To: ^WRPS Corrective Action Group
Cc: Beranek, Fred
Subject: PER Extensions

Please extend the following PERs:

WRPS-PER-2009-0472, 0473, 0474, 0476, and 0477

PER w/Res

RM Fred Beranek

Curr Due 05/11/2009

Extend 06/15/2009

Additional time is needed to complete actions required for resolution.

Thank you.

Tami Bowman

"Safety - Our Way of Life"
W- 509-372-0031
C- 509-438-5268
Fax- 509-373-2715

Washington River Protection Solutions LLC
Independent Assessment
of
Subcontract Management and Oversight

February 23 to March 10, 2009

Final Report Rev. 0
FY2009-WRPS-I-0002

washington **river**
protection solutions

Approved: _____
M. J. Silvia,
Team Lead

Team Members:

R. L. Brown	3-30-09 Date
M. P. Flasch	03/30/09 Date
L. R. Penick	3/30/09 Date

TABLE of CONTENTS

1.0 INTRODUCTION 1
2.0 PURPOSE AND SCOPE 1
3.0 EXECUTIVE SUMMARY 2
4.0 ASSESSMENT RESULTS 7
4.1 Functional Area: Interface Management 7
4.2 Functional Area: Subcontractor Management and Oversight / Objective #1 9
4.3 Functional Area: Subcontractor Management and Oversight / Objective #2 15
4.4 Functional Area: Subcontractor Management and Oversight / Objective #3 17
4.5 Functional Area: Document Control 23
4.6 Functional Area: Records Management 27

ATTACHMENTS

ATTACHMENT A - PERSONNEL CONTACTED 29
ATTACHMENT B - DOCUMENTS REVIEWED 32

ACRONYMS

AIA	Administrative Interface Agreement
BMA	Blanket Master Agreement
BTR	Buyer's Technical Representative
DOE	Department of Energy
EJTA	Employee Job and Task Analysis
ESH&Q	Environmental, Safety, Health, and Quality
ESRB	Executive Safety Review Board
ESL	Evaluated Suppliers List
FY	Fiscal Year
ICWEA	Intercompany Work Exchange Agreements
ISMS	Integrated Safety Management System
MOP	Management Observation Program
MOU	Memorandum of Agreement
PAAA	Price Anderson Amendment Act
PER	Problem Evaluation Request
POC	Point of Contact
QA	Quality Assurance
ROS	Request for On-site Services
RTK	Right to Know
SME	Subject Matter Expert
SOW	Statement of Work
TOC	Tank Operations Contractor
WRPS	Washington River Protection Solutions
WSHP	Worker Safety and Health Plan

1.0 INTRODUCTION

The Washington River Protection Solutions LLC *Quality Assurance Program Description*, TFC-PLN-02, requires that independent assessments be conducted to evaluate the performance of work processes with regard to requirements, customer expectations, and efforts to achieve the mission and goals of the organization. From February 23, 2009 through March 10, 2009, an independent assessment was conducted of the Washington River Protection Solutions management systems that implement the subcontract management and oversight processes. The assessment was led by Mr. Michael J. Silvia, with support from Performance Assurance personnel Robert L. Brown, Michael P. Flasch, and Lee R. Penick. This report documents the assessment details and results of the areas evaluated.

2.0 PURPOSE AND SCOPE

The purpose of this independent assessment was to evaluate the effectiveness of implementation of processes that support subcontract management and oversight. Assessment scope was as follows:

- Interface Management
  - Interfaces are effectively identified, documented, communicated and implemented with other Hanford Site Prime Contractors, as well as with other external contractors and companies.
- Subcontract Management and Oversight
  - Subcontract management and oversight activities are performed by knowledgeable WRPS personnel in accordance with well-defined and documented process expectations.
  - Subcontract management and oversight activities are supported by effective flow-down of requirements to the subcontractors.
  - Subcontract management and oversight activities are supported by periodic interface with responsible subcontractor personnel, including observations of in-progress field work, corrective action management, records management, and notification and reporting.
  - The WRPS Quality Assurance program is employed effectively to support subcontract management and oversight activities.

This assessment was performed in accordance with Washington River Protection Solutions procedure TFC-ESHQ-AP-C-02, *Independent Assessments*.

3.0 EXECUTIVE SUMMARY

The Independent Assessment of subcontract management and oversight was conducted February 23, 2009 through March 10, 2009. Though personnel resources and procedural direction are in place to provide Environment, Safety, Health and & Quality oversight of subcontracts, the subcontract oversight process needs significant improvement in both program content and implementation. The assessment team concluded the following:

a. The mission and organizational structure that supports interface management to ensure identification, documentation, and communication was found to be adequate and effective at present time.
b. Functional leadership for, and knowledge of, personnel performing the subcontractor oversight function, and effective implementation of the subcontractor oversight expectations, are less than adequate.
c. Flow-down of requirements to the subcontractors was found to be adequate and effective.
d. Implementation of periodic interface with responsible subcontractor personnel, including observations of in-progress field work, corrective action management, records management, and notification and reporting was found to be less than adequate.
e. Document control and records management practices were determined to generally be adequate, the exception being maintenance of subcontractor oversight screening documentation as quality records. Several improvement opportunities were identified to increase process efficiency and effectiveness.

This assessment resulted in six findings and sixteen observations, as follows; the details for each are provided in the body of the report.

Findings:

SO-F1 Programmatic ownership and responsibility for success of the subcontract oversight function have not been established. Guiding Principle 1 of RPP-MP-003, *Integrated Environment, Safety, and Health Management System Description for the Tank Farm Operations Contractor*, establishes expectations for processes to provide clear roles and responsibilities. **(WRPS-PER-2009-0472)**

SO-F2 Assessment activities have not been performed over the past several years to ensure that implementation of the subcontractor management and oversight process is achieving its desired objective. Core Function 5 (Provide Feedback and Continuous Improvement) of Integrated Safety Management as described in RPP-MP-003, *Integrated Environment, Safety, and Health Management System Description for the Tank Farm Operations Contractor*, establishes expectations for feedback and continuous process improvement. **(WRPS-PER-2009-0473)**

SO-F3 Subcontractor Oversight Plan (screening) forms (Form A-6003-991) have not been developed, or have been completed incorrectly, for many subcontracts as required in TFC-ESHQ-S_SAF-C-07, *Subcontractor Oversight*. **(WRPS-PER-2009-0474)**

SO-F4 Subcontractor oversight activities are not performed by the Environmental Programs organization as required by RPP-MP-003, *Integrated Environment, Safety, and Health Management System Description for the Tank Operations Contractor*, and TFC-ESHQ-S_SAF-C-07, *Subcontractor Oversight*. **(WRPS-PER-2009-0475)**

SO-F5 Buyer Technical Representatives and Contract Requestors have incorrectly determined in several instances that Subject Matter Expert (SME) approval of relevant Statements of Work (SOW) was not necessary. For example, approval by the Radiological Control organization was not identified for several inspection field work activities to be performed within Tank Farms. Contributing to this issue was incorrect determination by the Buyer Technical Representatives and Contract Requestors as to the need for some of the SMEs to approve the SOWs. This is identified as ineffective implementation of step 4.3.19 (Creating and Approving the Statement of Work) of TFC-BSM-CP_CPR-C-05, *Procurement of Services*, to determine the required SOW approvals. **(WRPS-PER-2009-0476)**

SO-F6 Record retention requirements for Subcontractor Oversight Plan (screening) forms and scheduling requirements for subcontractor oversight activities are not implemented as described in TFC-ESHQ-S_SAF-C-07, *Subcontractor Oversight*. **(WRPS-PER-2009-0477)**

Observations:

SO-O1 As an area for improvement, development and implementation of a qualification card process, would assist in ensuring that personnel assigned to perform the Buyer Technical Representative function possess the requisite training and experience to perform the function effectively. **(WRPS-PER-2009-0478)**

SO-O2 As an area for improvement, development, staffing and implementation of a limited size core group of personnel to perform all Buyer Technical Representative (BTR) functions has potential to increase both efficiency and effectiveness of the BTR role. **(WRPS-PER-2009-0479)**

SO-O3 Training and awareness of Buyer Technical Representatives regarding their functional roles and responsibilities for subcontractor oversight are less than adequate. **(WRPS-PER-2009-0480)**

SO-O4 Personnel performing Buyer Technical Representative (BTR) responsibilities achieve authorization to perform the function, and are listed on the Procurement web site; however, there is no requirement to receive re-authorization if personnel have not recently performed BTR responsibilities. **(WRPS-PER-2009-0481)**

SO-O5 The *Training Implementation Matrix per DOE Order 5480.20A* dated September 2005 needs to be revised to reflect the correct 'Compliance Reference' for 'Subcontractor Personnel Qualification'. Specifically, Table 2 (General Requirements Matrix), Chapter 1 (General Requirements), Section 3 (Subcontractor Personnel Qualification) references the compliance reference document as TFC-BSM-CP_CPR-C-03, *Buyer's Technical Representative Process*; however, this procedure was cancelled in April 2007, with the key elements incorporated into TFC-BSM-CP_CPR-C-05, *Procurement of Services*. **(WRPS-PER-2009-0482)**

SO-O6 A comprehensive assessment of the integration, procedural direction, and implementation of the WRPS procurement processes has not been performed since calendar year 2002. **(WRPS-PER-2009-0483)**

SO-O7 Subcontractor oversight plan documentation was observed indicating that planned oversight would consist of routine functional area surveillance activities already in place, with no specificity as to the relevant contract/release. Consequently, there is no assurance that the planned oversight activities would consider elements of the contract/release that may require oversight scope of a specialized nature, nor is there assurance that the specific subcontracts received necessary oversight. **(WRPS-PER-2009-0484)**

SO-O8 Observation indicated the ATCO shop is presently in use by construction subcontractors, but there is no evidence of a "Formal Turnover" of the facility from WRPS to the subcontractor in accordance with the provisions of the Statement of Work (reference Contract Requisition 00180390, *241-C-110 Waste Retrieval Systems Installation*). **(WRPS-PER-2009-0485)**

SO-O9 As an area for improvement, actions to screen subcontracts to determine the need for subcontractor oversight and to develop subcontractor oversight plans per TFC-ESHQ-S_SAF-C-07, *Subcontractor Oversight*, should be performed as subcontract pre-award activities rather than as post-award activities. Also, there is no timeframe specified to complete the subcontract oversight screening activity or to develop subcontract oversight plans. **(WRPS-PER-2009-0486)**

SO-O10 *Evaluation of Subcontractor Performance* evaluations are not performed for some subcontracts that roll over year-to-year.
(WRPS-PER-2009-0487)

SO-O11 Several areas of improvement were identified for the Subcontractor Oversight Form (Form A-6003-991) to strengthen the determination process for subcontractor oversight. For example:

a. Approval documentation for functional area managers responsible for subcontract oversight activities needs to be strengthened.
b. Subcontract activities involving field work do not receive particular emphasis for oversight activity.

(WRPS-PER-2009-0488)

SO-O12 TFC-ESHQ-S_SAF-C-07, *Subcontractor Oversight* does not provide recommended subcontractor oversight frequency or depth of review.
(WRPS-PER-2009-0489)

SO-O13 Procedures that support the subcontractor oversight function provide several instances of conflicting direction. In particular, the following procedures are not well integrated to ensure that Buyer Technical Representatives, ESH&Q managers, and Contract Requestors can perform their roles and responsibilities effectively and efficiently:

a. TFC-ESHQ-S_SAF-C-07, *Subcontractor Oversight*
b. TFC-BSM-CP_CPR-C-05, *Procurement of Services*
c. TFC-BSM_CP_CPR-P-05, *Subcontract Closeout*

(WRPS-PER-2009-0490)

SO-O14 TFC-BSM-CP_CPR-C-05, *Procurement of Services* is unclear as to whether the following documents identified in the procedure are to be treated as record material:

a. Determination of Required Approval (DRA) forms
b. Workplace Substance Abuse Program (WSAP) form

(WRPS-PER-2009-0491)

SO-O15 TFC-ESHQ-ENV_AP-D-01, *Environmental Oversight of Subcontractors*, was cancelled in June 2006; however, the document is still listed as a company level guidance document in TFC-PLN-73, *Environmental Protection and Compliance Plan*, and should be replaced with TFC-ESHQ-S_SAF-C-07, *Subcontractor Oversight*.
(WRPS-PER-2009-0492)

SO-O16 Passport is not recognized as a document 'record' database. TFC-BSM-IRM_DC-C-02, *Records Management*, recognizes documents maintained as records in approved TFC Records Storage Areas, Document Service Centers, Records Holding Areas, or electronically stored in the Integrated Document Management System, but is silent on the 'record' determination for the Passport database. **(WRPS-PER-2009-0493)**

4.0 ASSESSMENT RESULTS

The purpose and scope of the assessment were presented at the entrance meeting conducted on February 23, 2009. During the performance of the assessment, periodic assessment team meetings were held to apprise responsible personnel of assessment issues and overall progress. Final assessment results were presented at an exit meeting on March 10, 2009.

The approach used during the assessment consisted of interviews and document reviews, with limited field observation due to the nature of the assessment. Attachment A provides a listing of personnel contacted during the assessment; Attachment B provides a listing of documents reviewed in support of the assessment.

4.1 Functional Area: Interface Management

Objective:

Interfaces are effectively identified, documented, communicated and implemented with other Hanford Site Prime Contractors, as well as with other external contractors and companies.

Criteria/Requirements:

1. Formal intercompany work exchange agreements (ICWEA) are in place between Washington River Protection Solutions LLC (WRPS) and affiliate companies to perform work without fee.
2. Work performed under ICWEAs is approved and authorized.
3. Memorandum of Agreement documents are in place to describe the business management agreements between WRPS and other contractors for the performance and payment of services.
4. Interface agreements are in place, as necessary, to support formal commitments with other Hanford Site Prime Contractors. (Physical system interfaces are controlled via an Interface Control Document, while administrative interfaces are controlled via an Administrative Interface Agreement.)
5. Statements of Work are applied, as necessary, to define the scope, safety, quality, and technical requirements for services that are provided for a discrete transfer of funds.
6. The WRPS assessment program is implemented to monitor the effectiveness of the interface management processes and implementation of safety, environmental, radiological, and quality requirements stated in interface documents.

RESULTS

Conclusion Statement:

The mission and organizational structure that supports interface management to ensure identification, documentation, and communication was found to be adequate and effective at present time. A management assessment is scheduled to review the status of interface documents and validate previous gap analysis to ensure contractual commitments and interfaces are being addressed. There are no Findings or Observations for this objective.

Discussion:

Project Integration consists of five organizations with each having a unique function and responsibility. New to tank farms under the prime contract is Interface Management. The function of this organization is to develop documents that assist with the integration of Hanford Site requirements either shared or provided by new and existing prime contractors under the Department of Energy offices.

Intercompany work exchange agreements (ICWEA) are a subset of the documents that are used to describe services and material request between affiliates, prime contractors, and subcontractors performing work for Washington River Protection Solutions LLC (WRPS). Interface Management will manage the program that communicates, establishes policy and assist in the development of documents for prime contract interfaces points established by each of the respective prime contracts. These documents consist of Memorandum of Agreements (MOA), Interface Control Documents (ICDs), and Administrative Interface Agreements (AIA), while ICWEA documents (blanket master agreement (BMA), request for on-site services (ROS), statement of work (SOW), etc) are controlled and issued by the Procurement Services and Prime Contract.

The processes established under company policies, plans, and procedures require approvals and authorization of ICWEA prior to work commencing. TFC-PLN-102, *TOC Interface Management Plan* outlines the requirements in the Contract related to the Interface Management function and defines the execution/portfolio management strategy the TOC will apply to meet these requirements and support the line management projects. The implementing document for interface management is TFC-BSM-CP_CPR-C-17, *Interface Management.* Interface Management has recently completed the development and updates of prime contract MOAs. The process of developing other interface management documentation to implement formal commitment related to the cooperative transfer of material, energy, or data across company boundaries is on going and tracked by Interface Management.

The Interface Management plan and procedure outline the basic roles, responsibilities and process for the program and development of required documentation. As the program and process progress over the next six to twelve months, focus on areas such as program ownership, field implementation responsibilities, and contractor oversight will need to be

integrated. The roles listed in the plan for interface owner and associated point of contact (POC) will need to flow-down to the procedure level and may need expanding. Assessments, meetings, and issue tracking and resolution will provide feedback on where improvements could be needed in the future.

4.2 Functional Area: Subcontractor Management and Oversight / Objective #1

Objective:

Subcontract management and oversight activities are performed by knowledgeable WRPS personnel in accordance with well-defined and documented process expectations.

Criteria/Requirements:

1. Buyer Technical Representatives (BTRs) and Contract Requestors understand their subcontractor oversight roles and responsibilities, as follows:

    a. BTRs have completed the necessary training and qualification.
    b. BTRs provide technical direction/clarification to the subcontractor to ensure performance of all elements in accordance with the statement of work without placing emphasis on schedule or cost to the detriment of quality, safety, or the environment.
    c. BTRs provide internal coordination of, and interface with, the subcontractor regarding various technical requirements, such as the following:

        i. quality assurance
        ii. safety, health
        iii. Security and Emergency Services
        iv. protective forces
        v. environmental
        vi. Price-Anderson Amendments Act, and
        vii. ISMS principles applicable to the performance of the Contract pursuant to Tank Operations Contract implementing procedures.

2. For subcontracts, BTRs and Contract Requestors ensure subcontract personnel have training and qualifications commensurate with the responsibilities.
3. Roles and responsibility for personnel managing and performing the subcontractor oversight function are clearly established and are implemented effectively.

RESULTS

Conclusion Statement:

Functional leadership for, and knowledge of, personnel performing the subcontractor oversight function, and effective implementation of the subcontractor oversight expectations, are less than adequate. There are two Findings and six Observations for this objective.

Discussion:

Programmatic ownership and responsibility for success of the subcontract oversight function have not been established. Guiding Principle 1 of RPP-MP-003, *Integrated Environment, Safety, and Health Management System Description for the Tank Farm Operations Contractor*, establishes expectations for processes to provide clear roles and responsibilities. TFC-BSM-CP_CPR-C-05, *Procurement of Services* and TFC-ESHQ-S_SAF-C-07, *Subcontractor Oversight*, provide applicable roles and responsibilities for the tasks applicable to the procurement process and subcontractor management and oversight; however, the functional area managers for these procedures acknowledge only their specific functional roles and responsibilities in the overall process. This issue is identified as **Finding SO-F1**. In particular:

a. ISMS Guiding Principle 1 mandates that clear and unambiguous lines of authority and responsibility are established and maintained at all organizational levels. Though the relevant ESH&Q functional area managers confirmed ownership responsibility for their respective functional areas, an individual to serve as the collective management sponsor is not evident.
b. Though the Manager – Industrial Safety is the Functional Area Manager for the subcontract oversight procedure (TFC-ESHQ-S_SAF-C-07, *Subcontractor Oversight*) and the Manager – Procurement Services is responsible for the Buyer Technical Representative function to coordinate the development and implementation of subcontractor oversight plans, neither individual feels that they own or are responsible for success of the subcontractor oversight function.
c. 'Functional area manager' and 'document owner' responsibilities for the above procedure transitioned from the Quality Assurance organization to the Industrial Safety organization with revision B-4 in February 2008. An expectation that process ownership accompany the transfer of procedure ownership was not considered in the transition.
d. Though functional area manager responsibility for the above procedure has recently transitioned, the Manager – Quality Assurance Services remains responsible for the Subcontract Oversight form (Form A-6003-991).
e. PER 09-0166, issued January 27, 2009, discussed knowledge deficiencies encountered with several BTRs regarding the expectations for and implementation of subcontract oversight plans. This PER was categorized as PER/RES, and assigned to the Manager – Procurement Services.

Assessment activities have not been performed over the past several years to ensure that implementation of the subcontractor management and oversight process is achieving its desired objective. Core Function 5 (Provide Feedback and Continuous Improvement) of Integrated Safety Management as described in RPP-MP-003, *Integrated Environment, Safety, and Health Management System Description for the Tank Farm Operations Contractor*, establishes expectations for feedback and continuous process improvement. This issue is identified as **Finding SO-F2**. Contributing factors are as follows:

a. Comprehensive assessments of the subcontractor management and oversight process have not been performed in approximately nine years. Assessment activities have focused on identification and resolution of subcontract management and oversight issues in specific organizational areas, without performance of process assessments to identify and resolve the underlying issues.

    1. A series of subcontract management effectiveness assessments were performed in FY2002, but only one has been performed since (ref. FY-2007-SHQ-M-0135, *Subcontractor Oversight Process*, dated March 26, 2007, performed by the Quality Assurance organization). The one assessment report indicated an assessment of shallow scope and depth of the subcontractor oversight process.
    2. An independent Assessment of '*CH2M HILL Corporate Independent Assessment of CHG Hanford Tank Farm Activities* performed in December 2005 identified "There is no articulated strategy to describe how we approach subcontractor activity in the independent assessment program. ... This issue is relevant because of the heightened expectations from the DOE with respect to our responsibility for ensuring adequate performance of our subcontractors." This issue was supported by a recommendation that "The ESRB should determine if the company strategy to ensure adequate subcontractor oversight is adequately articulated and sufficiently comprehensive" (reference PER 06-0084). The closure documentation for this PER did not provide evidence that the recommendation was considered for action by the ESRB.
    3. An Independent Assessment of 'Procurement to Include Subcontractor Oversight' was planned for FY 2006, but was subsequently cancelled. This assessment was initially planned, in part, in response to PER 06-0084 (January 2006) recommending "The ESRB should determine if the company strategy to ensure adequate subcontractor oversight is adequately articulated and sufficiently comprehensive." Insufficient follow-through of this issue indicates a missed opportunity to preclude the current adverse trend.
    4. There are no further assessments planned in the subcontract management and oversight effectiveness topical area in FY2009.
    5. At the time of the assessment, there are no personnel in the Quality Assurance, Safety or Procurement line management teams qualified to lead Management or Specialty Assessment activities, via completion of Course # 350319, *Management Assessment Team Leader Qualification* or

Course # 357319, *Assessment Team Leader Requalification*. Though the Manager – Quality Services was previously qualified to lead assessment teams, the qualification expired on February 12, 2009. It is recognized that another member (non-management) of the Quality Services organization is presently qualified to lead assessment teams.

6. RPP-8411, *Washington River Protection Solutions Procurement Process Description* (co-approved by ORP) states "... ensure that every product or service purchased meets all necessary technical standards and requirements"; however, monitoring and evaluation of the procurement process are not implemented via implementation of self-assessment processes as discussed in the document to promote continuous improvement (reference sections 2.3, *Oversight and Compliance: Self-Assessment*, and 4.7, *Continuous Process Improvement*). In particular, expectations of section 5.6.1, *Managing Subcontractor Performance* to facilitate exemplary subcontract performance through monitoring of subcontractors to ensure ESH&Q program compliance are infrequently performed.
7. MOPs are not performed of the Subcontractor Oversight function as described in TFC-ESHQ-S_SAF-P-06, *Safety Assessments*. Attachment A (Safety and Health Program Functional Elements and Minimum Assessment Periodicity) identifies Subcontractor Oversight as a topic to be considered in development of the annual safety program assessments and MOP topics; however, review of MOP records in IDMS indicates there have been only two MOPs performed in this area over the past four years. The annual (fiscal year) schedule for Safety and Health program MOPS on topics in Attachment A, such as Subcontractor Oversight, has not been developed for FY2009 as described in Step 4.1 of the procedure. The issue of not scheduling safety MOPs to cover Subcontractor Oversight and other S&H areas is similar to the issue described in PER 08-0252.

b. Several Problem Evaluation Requests (approximately ten PERs) have identified ineffective implementation of subcontractor oversight plans, as identified during Management and Specialty Assessments. However, the corrective action plans associated with the relevant PERs have focused on the functional area responsible for the specific subcontract management and oversight plans, without communication to the process owners (e.g., presently, the Industrial Safety organization). Consequently, emergence of an adverse performance trend has not been identified of the subcontractor oversight process to enable focus on process implementation deficiencies.

c. Discussion with a Safety SME indicated they spend much more time reviewing documents in the office, (submittals, work packages, etc.) than performing field surveillances. The SME stated that not all time spent in the field is necessarily documented as a surveillance. Also, discussions with two SME's indicate they expect the BTR to bring a subcontractor oversight plan screening form to them to be signed or request it be developed, but they don't expect to have to initiate the

oversight screening form themselves. One interviewed SME, specifically asked if he was familiar with the new release of the Subcontractor Oversight procedure dated February 11, 2009 and his responsibility to develop the plan as indicated below, stated that he was not aware.

> 3.2 "Safety & Health, Environmental, Quality Assurance, and Radiological Controls personnel are jointly responsible for coordinating subcontractor oversight activities with the buyer's technical representative (BTR) as specified below. When required, they will develop a Subcontractor Oversight plan and provide it to the BTR and Procurement for transmittal to the Subcontractor."

Presently, for several (approximately 30) subcontracts/releases that apply to in-farm and design/build procurements, the assigned BTR is an administrative individual that does not possess technical knowledge and experience necessary to ensure that elements of the subcontract management and oversight process are implemented effectively. As an area for improvement, development and implementation of a qualification card process, especially of a dual qualification level to differentiate between administrative and technical procurements involving field work, would assist in ensuring that personnel assigned to perform the BTR function possess the requisite training and experience to perform the function effectively. This issue is identified as **Observation SO-O1**.

Personnel that perform the BTR function, when interviewed, stated that implementation of the BTR responsibilities frequently impose upon their normal position duties, and BTR responsibilities are not receiving an appropriate level of commitment. Consequently, decisions are made that result in less than adequate attention to BTR responsibilities. Presently, 36 personnel who are embedded in the line organizations perform the BTR function as a collateral duty. Administrative personnel performing the associated BTR functions appear motivated and interested in success of the subcontract management and oversight process, but sometimes do not recognize or provide challenge when process elements are not implemented in an effective manner (such as responsible functional area managers incorrectly concluding that oversight of field work was not needed). Interview results also indicated that the process knowledge and time commitment necessary to effectively perform BTR responsibilities are not receiving an appropriate level of commitment by most BTRs. As an area for improvement, development, staffing and implementation of a limited size core group of personnel to perform all BTR functions has potential to increase both efficiency and effectiveness of the BTR role. This issue is identified as **Observation SO-O2**.

The method and depth of training provided to BTRs is less than adequate to ensure that BTRs are fully trained to assume the functional roles and responsibilities. BTRs frequently cited a desire for additional training. Document reviews and interviews conducted determined training and awareness of Buyer Technical Representatives regarding their functional roles and responsibilities for subcontractor oversight are less than adequate. This issue is identified as **Observation SO-O3**. For example:

a. Several BTRs stated that they were not aware of the BTR role in subcontractor oversight. Previous assessments found additional examples of BTRs stating that they had no knowledge of TFC-ESHQ-S_SAF-C-07, *Subcontractor Oversight* or the use of Form A-6003-991 (Subcontractor Oversight Plan) to determine the need for oversight of subcontractors.
b. Contributing to this knowledge weakness is discontinuation of a continuing training activity for BTRs that was removed in February 2008. Consequently, personnel performing BTR responsibilities are not provided with continuing training opportunities to maintain proficiency as BTRs.
c. Recent revisions to TFC-BSM-CP_CPR-C-05 that impacted BTR roles specified "Training will be provided to BTRs in their quarterly update"; however, as noted above, quarterly updates have not been provided since 2008.
d. When interviewed, presently active BTRs stated that they would welcome the concept of continuing training. Course #350246, *Buyer Technical Representative Upgrade Class* is the training provided to authorized BTRs; 130 current WRPS personnel have completed Course #350246, *Buyer Technical Representative Upgrade Class* since calendar year 2001, of which 72 are authorized to perform BTR responsibilities, of which 36 are actively performing BTR responsibilities.
e. The procedure for subcontractor oversight provides no delineation between the types of subcontracts (e.g., administrative procurement activities, rather than procurement activities involving field work, though staff augmentation procurements are excluded) and provides no guidance for determining or developing the level or type of subcontractor oversight that might be appropriate for a given type of subcontract, i.e. design, construction, etc. Consequently, BTR knowledge and awareness of subcontractor oversight expectations is entirely dependent upon the BTR's technical knowledge and experience.
f. Increased familiarization with Passport was cited by most BTRs as a desired training activity. In addition, several authorized (but inactive) BTRs are not authorized to access Passport; subsequently, their ability to effectively perform the BTR function is significantly minimized should this support be needed.

Personnel performing Buyer Technical Representative (BTR) responsibilities achieve authorization to perform the function, and are listed on the Procurement web site; however, there is no requirement to receive re-authorization if personnel have not recently performed BTR responsibilities. Consequently, personnel performing BTR responsibilities do not maintain proficiency as BTRs, and are not made aware of changes to BTR processes and expectations or to changes in the procurement process. As an area for improvement, re-authorization of personnel performing BTR responsibilities should be considered (e.g., BTR function authorization removed) if they have not actively performed BTR responsibilities within a specified period of time. This issue is identified as **Observation SO-O4**.

The *Training Implementation Matrix per DOE Order 5480.20A* dated September 2005 needs to be revised to reflect the correct 'Compliance Reference' for 'Subcontractor Personnel Qualification'. Specifically, Table 2 (General Requirements Matrix), Chapter 1 (General Requirements), Section 3 (Subcontractor Personnel Qualification) references the compliance reference document as TFC-BSM-CP_CPR-C-03, *Buyer's Technical Representative Process*; however, this procedure was cancelled in April 2007, with the key elements incorporated into TFC-BSM-CP_CPR-C-05, *Procurement of Services*. Discussion with the Training Manager identified that the need for a revision to the Training Implementation Matrix has been identified and is in progress, including removal of the above reference. This issue is identified as **Observation SO-O5**.

A comprehensive assessment of the integration, procedural direction, and implementation of the WRPS procurement processes has not been performed since calendar year 2002. As an improvement opportunity, performance of an assessment in this area should be considered, to include interface management with the prime contractors and affiliates within the assessment scope. This issue is identified as **Observation SO-O6**.

4.3 Functional Area: Subcontractor Management and Oversight / Objective #2

Objective:

Subcontractor management and oversight activities are supported by effective flow-down of requirements to the subcontractors.

Criteria/Requirements:

1. General site and project-specific safety, health, radiological, environmental, and quality requirements are included in contracts and statements of work, including the following as flowed down through the procurement process to subcontractors:

    a. The Tank Operations Contractor (TOC) Health and Safety Plan (HASP) and the Price Anderson Amendment Act reporting responsibility is applicable to subcontractors who may be involved in tank farm work activities such as design, construction, operation, maintenance, decontamination, decommissioning, and environmental restoration activities.
    b. The medical contractor is responsible for scheduling employees and the employees of contractors, and lower-tier subcontractors for medical qualification examinations and medical monitoring based on the data provided through the EJTA. Results of medical examinations and monitoring are reported to employees, employees of contractors and lower-tier subcontractors, and their respective managers or supervisors. The medical contractor is responsible for maintaining medical records in accordance with the applicable OSHA and DOE requirements.

c. The Chemical Management Plan is relevant to subcontractors involved in the management of hazardous materials.
d. Processes are used to communicate hazardous material information to all personnel who work with hazardous materials during any activity in the tank farms.
e. Construction subcontractors are required to implement the TOC worker safety and health plan (WSHP). The scope, technical complexity, and risk of the construction activity determines the applicable state and federal requirements, as well as the TOC safety procedures, work planning process, and field oversight required.
f. As detailed in HNF-MP-5184 (*Washington River Protection Solutions Radiation Protection Program*) requirements contained in 10 CFR Part 835 are invoked to establish radiation protection standards, limits, and program requirements for protecting individuals from ionizing radiation.
g. The *Washington River Protection Solutions (WRPS) On-Site Work Provisions* elements are invoked, to include the following:

    i. Required Notifications
    ii. Investigation Support
    iii. Reporting and Record Keeping
    iv. Site-wide Qualification and Training
    v. Site Deliveries
    vi. Security
    vii. Medical Evaluations
    viii. Radiation Protection
    ix. Emergency Management
    x. Workplace Substance Abuse Programs
    xi. Whistleblower Protection

2. Subcontractor oversight activities consider reporting of non-compliances to 10CFR851 and PAAA.

RESULTS

Conclusion Statement:

The objective and organizational structure that supports effective flow-down of requirements to the subcontractors was found to be adequate and effective. There are no Findings or Observations for this objective.

Discussion:

TFC-BSM-CP_CPR-C-05, *Procurement of Services*, and TFC-BSM-CP_CPR-C-06, *Procurement of Items (Materials)* ensure that the WRPS contract requirements receive

appropriate flow-down to subcontractors. The responsibility to implement requirements flow down lies with the Buyers Technical Representative (BTR) as described in TFC-BSM_CPR-C-05 which identifies the BTR as responsible to ensure deliverables and requirements are clearly defined. BTRs ensure company policies, procedures, and ISMS flow-down, and Safety, Procurement and Quality Assurance requirements are communicated to subcontractors and incorporated into their work efforts. BTRs are the authorized communication link between WRPS technical staff and the subcontractor to clarify questions, procedures, establish priorities, authorize overtime/accelerate progress and processes. BTRs work in concert with procurement specialists to develop new subcontracts and modify existing subcontracts to reflect changing scope and/or field conditions. Specific applications of this responsibility are contained in Section 4.0.

Document reviews and interviews determined that the flow-down of WRPS applicable contract requirements are usually listed in both blanket master agreements and statements of work for subcontractor activities Several minor examples of ineffective requirements flow-down were noted that were judged to have no significant impact. Several assessors evaluated the BMAs and SOWs developed by different contract requestors and BTRs and found no issues. Examples: Review of construction requisition 182095 and SOW; Requisition 00176418, *C-104 Engineering Design Support* and Contract Requisition 00180390; and *241-C-110 Waste Retrieval Systems Installation*. The TOC HASP and PAAA responsibilities are flowed down to the subcontractor as are requirements for a Chemical Management Plan, On-Site Work Provisions, and applicability to 10 CFR 851.

4.4 Functional Area: Subcontractor Management and Oversight / Objective #3

Objective:

Subcontractor management and oversight activities are supported by periodic interface with responsible subcontractor personnel, including observations of in-progress field work, corrective action management, records management, and notification and reporting.

Criteria/Requirements:

1. Subcontractor Oversight Plans are in place for all activities identified on the Subcontractor Oversight Plan screening forms, with the screening form results located in the Buyer Technical Representative (BTR) files.
2. Subcontractor oversight activities are captured on the integrated assessment schedule or project schedule, as appropriate (e.g., progress meeting participation, Management Observation Program (MOP) conduct, periodic monitoring of performance).
3. Oversight files are maintained for each subcontractor to document oversight activities and responses to any findings and issues.
4. Subcontractor Oversight Plans are maintained as quality records.

5. Subcontractor performance evaluation history files are reviewed by BTRs, as necessary, to ensure that opportunities to bid for work are provided to quality performers.
6. Findings and issues resulting from subcontractor oversight activities receive appropriate corrective actions that prevent recurrence.
7. The WRPS assessment process is applied to evaluate oversight of subcontractor performance, including hands-on work and field implementation of administrative and technical procedures and involve workers, supervisors, and managers.
8. Subcontractor oversight activities consider subcontractor knowledge of 10CFR851 requirements (such as worker rights, posting of worker rights, etc,).
9. Subcontractor oversight activities consider the effectiveness of reporting of non-compliances to 10CFR851 and PAAA.

Results

Conclusion Statement:

The objective and organizational structure that supports implementation of periodic interface with responsible subcontractor personnel, including observations of in-progress field work, corrective action management, records management, and notification and reporting was found to be less than adequate. There are three Findings and six Observations for this objective.

Discussion:

As detailed in this section, several issues were identified relating to implementation of subcontract oversight expectations. Contributing to these issues is inconsistent interpretations as to what constitutes a satisfactory subcontractor oversight plan. For example, interview results revealed the following interpretations:

a.) Completion of section II of the Subcontractor Oversight Plan form (Form A-6003-991, *Subcontractor Oversight Plan*) that identifies necessary oversight activities.
b.) Development of specific subcontractor oversight criteria that are to be implemented to support item a., and
c.) Generation of a detailed subcontractor oversight plan that is scheduled and implemented on a pre-determined frequency.

Subcontractor Oversight Plan (screening) forms (Form A-6003-991) have not been developed, or have been completed incorrectly, for many subcontracts as required in TFC-ESHQ-S_SAF-C-07, *Subcontractor Oversight*. Consequently, BTR coordination actions to ensure that subcontractor oversight coordination activities are defined and implemented are frequently not provided. This issue is identified as **Finding SO-F3**. It is recognized that considerable field oversight is performed, particularly in the industrial

safety area; however, there is no assurance that these oversight activities effectively support subcontract management and oversight. The following examples support the finding:

a. Many subcontracts/releases (15 of 34 based upon a sample by the assessment team) have not been screened to determine whether subcontractor oversight plans are necessary.
b. Subcontract oversight screening activities indicate a need for oversight of field activities for only 36 of 55 subcontracts involving field work (65%, as of February 2009), based upon a sample review by the Safety organization. Consequently, subcontract oversight plans and schedules have frequently not been implemented for subcontracts involving field work activities.
c. Feedback received during the assessment indicated that some personnel responsible for BTR activities incorrectly believed that subcontract activities implemented via the WRPS work control system did not require development of Subcontractor Oversight Plans.
d. In one instance, the 'subcontract oversight' function understanding by the responsible BTR was to review contractor invoices for budget and scope impact, rather than ESH&Q oversight of subcontractor activities.
e. Article 2.0 (Integration of Environment, Safety, Health and Quality (ESH&Q) Into Work Planning and Execution), Item 2.1.11 (General) of the WRPS On-Site Work Provisions states "Open and effective communication shall exist between the SUBCONTRACTOR and the Buyer's Technical Representative (BTR) to support the management of ESH&Q issues and initiatives." Though several BTRs were aware of this clause, they did not interpret the clause to encompass subcontract management and oversight.

Subcontractor oversight activities are not performed by the Environmental Programs organization as required by RPP-MP-003, *Integrated Environment, Safety, and Health Management System Description for the Tank Operations Contractor*, and TFC-ESHQ-S_SAF-C-07, *Subcontractor Oversight*. Consequently, Environmental Compliance personnel do not implement necessary environmental field activities. Current Environmental Surveillance checklists do not identify subcontractor oversight as within scope of Tank Farm facilities. This issue is identified as **Finding SO-F4**.

TFC-BSM-CP_CPR-C-05, *Procurement of Services*, establishes the process for which subcontractor oversight is identified through the development of procurement documents such as the Blanket Master Agreement (BMA) and Statement of Work (SOW). Several Contract Requisitions were noted to not identify subject matter experts (SMEs) in functional areas impacted by the work scope (e.g., Radiological Control, Environmental Programs, and Quality Assurance). TFC-BSM-CP_CPR-C-05, *Procurement of Services*, Section 4.3 Creating and Approving the Statement of Work requires involvement of SME and others, along with Attachment C of the procedure which functions as the tool the BTR can use. Improper approval routing misses the opportunity to ensure proper requirements are flowed down to the subcontractor via the Statement of Work. TFC-BSM-CP_CPR-C-05 provides a useful tool to identify necessary review and approval

SMEs on a 'Determination of Required Approvals' checklist; however, the Buyer Technical Representative and Contract Requestor incorrectly completed the checklist in several instances, resulting in a conclusion that SME approval of relevant Statements of Work was not necessary. This issue is identified as **Finding SO-F5**. Of ten Requisitions reviewed, five with potential ESH&Q impact (e.g., radioactive waste disposal activities, tank farm entries to support inspections) did not contain appropriate approvals. One example of not involving a relevant SME in the Statement of Work approval process (Radiological Control, reference Requisition 00182095) was identified recently in PER 09-0338 (task releases had not yet been issued on this Requisition). The four additional Requisitions are as follows:

Contract Number/ Requisition Number	Contract Scope	Relevant Functional Area SMEs Not Included in SOW Approval
36572 / 00175072	Tank Farm Inspection Services	Radiological Control
28005 / 00178835	ATL Hazardous Waste Treatment/ Disposal	Quality Assurance
28005 / 00178837	Tank Farm Hazardous Waste Treatment/ Disposal	Quality Assurance
36437 / 00176764	PNNL Support for ILAW Glass Testing	Radiological Control Environmental

There is little objective evidence of Environmental, Safety, or Radiological Control oversight being performed either as specific subcontractor oversight or as management observation program (MOP) walk downs or safety surveillances. Interviews with subcontractor staff at the ATCO shop and Vadose Zone project work indicated little presence by environmental, safety or radiological control staff performing oversight activities. A field walk-down of the ATCO shop by the assessment team on February 26, 2009 identified several instances of poor housekeeping. A contributing factor was that requirements for daily safety inspections had not been flowed down to construction subcontracts, though the Construction subcontractor safety professionals do perform safety inspections. When the ATCO shop storage conditions were observed by the assessment team, prompt action was taken by a WRPS safety professional in attendance and action was taken to capture this issue in the corrective action program (reference PER 09-0355). As described in the PER, contributing to the issue was that requirements for daily safety inspections had not been flowed down to construction subcontracts, though the Construction subcontractor safety professionals do perform safety inspections.

Subcontractor oversight expectations are developed and implemented through coordination with the BTR, contract requestor, and SME, and support by ESHQ SMEs to conduct the required oversight. Interviews and document reviews identified several subcontractor oversight plans indicating that planned oversight would consist of routine functional area surveillance activities already in place, with no specificity as to the relevant contract/release. Consequently, there is no assurance that the planned oversight activities would consider elements of the contract/release that may require oversight scope of a specialized nature, nor is there assurance that the specific subcontracts received the planned oversight. This issue is identified as **Observation SO-O7**. Though a considerable amount of field oversight activity is evident, particularly in the industrial safety area, it is virtually impossible to correlate the actual field work activities to specific subcontractor field activities.

Observation indicated the ATCO shop is presently in use by construction subcontractors, but there is no evidence of a "Formal Turnover" of the facility from WRPS to the subcontractor in accordance with the provisions of the Statement of Work (SOW) (reference Contract Requisition 00180390, *241-C-110 Waste Retrieval Systems Installation*). This issue is identified as **Observation SO-O8**. A review of the SOW finds the SOW vague regarding expectations the facilities being turned over to the subcontractors for work. If item 1.1 of the following text of the SOW is in need of revision, the revision should be processed:

Company Facilities

1.1 When the Company provides onsite facilities (i.e., office/administrative, storage, shop facilities and/or lavatory/sanitary facilities) and furnishings (i.e., refrigerators, stoves, microwaves, furniture), the Company will formally turnover the facility(ies) and furnishings to the Contractor.

The WRPS ESH&Q organization is responsible to provide subcontractor management support to the BTR by 1) communicating requirements, and 2) performing assessments, inspections, and/or surveillances to ensure compliance as discussed in TFC-ESHQ-S_SAF-C 07, *Subcontractor Oversight*. Success of the subcontractor oversight process is based upon the BTR, contractor requestor, and SME working together to ensure that subcontractor oversight is performed as needed and is performed effectively. Actions to screen subcontracts to determine the need for subcontractor oversight and to develop subcontractor oversight plans are performed as post-subcontract award activities via completion of the Subcontractor Oversight Screening form (Form A-6003-991). As an area for improvement, completion of the need for subcontractor oversight (via the subcontract oversight screening form completion) should be considered as a pre-award activity. Should the need for a revision to subcontract oversight be identified, particularly the scope and frequency of subcontractor oversight, a revision to the screening determination could be readily accommodated. If the decision is to retain the post-award determination, a time period following award needs to be specific to direct when the oversight screening activity should be completed. This issue is identified as **Observation SO-O9**.

Evaluation of Subcontractor Performance evaluations are not performed for some subcontracts that roll over year-to-year. Three interviewed BTRs with relevant contracts/releases confirmed that they do not complete the *Evaluation of Subcontractor Performance* evaluations at the end of the fiscal year. Since the contracts potentially never end, there is no trigger to perform this closure activity described in step 4.4 (Closure Oversight Activities) of TFC-ESHQ-S_SAF-C-07, *Subcontractor Oversight.* Consequently, evaluation documentation does not exist to support future subcontract choice considerations. Three interviewed BTRs with relevant contracts/releases confirmed that they do not complete the *Evaluation of Subcontractor Performance* evaluations at the end of the fiscal year. As an improvement opportunity, these evaluations should be completed at the Release level, rather than at the Subcontract level, since Releases are issued at least each year. This issue is identified as **Observation SO-O10**.

Several areas of improvement were identified for the Subcontractor Oversight Form (Form A-6003-991) to strengthen the determination process for subcontractor oversight (this issue is identified as **Observation SO-O11**):

a. To maintain process integrity, a suggested improvement opportunity is to implement one or both of the following recommendations:

    i. Require each of these functional area managers to concur with the screening results by signing in Section I (Oversight Plan Screening) of the form.
    ii. Provide concurrence ability in Passport for each of these managers regarding the need for subcontractor oversight plans in their respective functional area.

b. Section I of the Subcontractor Oversight Plan form should be modified to add a 'Yes/No' determination to the question "Does the work activity involve field work?", which should require increased ESH&Q scrutiny.

c. Sections I and II of the Subcontractor Oversight Plan form should be modified to require Form A-6003-991 to be attached to the Passport Comm Log when completed.

d. Section II of the Subcontractor Oversight Plan form requiring approval signatures by the relevant ESH&Q managers should be changed to require both the Manager – Industrial Safety and the Manager – Industrial Hygiene to approve, since subcontractor oversight plans may be required in one of these areas but not the other.

TFC-ESHQ-S_SAF-C-07, *Subcontractor Oversight* does not provide recommended subcontractor oversight frequency or depth of review. Some checklist considerations for scope are provided in Attachments A through D of the procedure for Safety and Health,

Radiological Control, Environmental and Quality Assurance, respectively; however, considerations such as prior site work by the subcontractor, the detailed nature of the work (especially for field activities), and potential vulnerability should the work not be performed safely and as planned should be considered when determining the oversight frequency and depth. This issue is identified as **Observation SO-O12**.

4.5 Functional Area: Document Control

Objective:

WRPS activities ensure that specified documents, either in hard copy or electronic media, including latest changes thereto, are controlled, reviewed for adequacy, approved for release, and distributed to and used at the location where the work is being performed.

Criteria/Requirements:

1. The following controls shall be applied to documents and changes thereto:

    - The identification of controlled documents
    - The specified distribution of controlled documents for use at the appropriate location
    - The identification of individuals responsible for the preparation, review, approval, and distribution of controlled documents
    - The review of controlled documents for completeness and approval prior to distribution, and a method to ensure the correct documents are being used.

2. Changes to documents, except minor changes, shall be reviewed and approved by the same organizations or technical disciplines that performed the original review and approval, unless other organizations (those affected by the change) are specifically designated.
3. The individuals reviewing document changes shall have access to pertinent document background data or information upon which to base their review and approval.
4. Minor changes to documents, such as inconsequential editorial corrections, shall not require that the revised documents receive the same review and approval as the original documents. The following are considered editorial changes:

    - Correcting grammar or spelling
    - Renumbering sections or attachments that do not affect the sequence of work
    - Changing the title or number of the document and updating organizational titles.

5. To avoid a possible omission of a required review, the type of minor changes that do not require such a review and approval, and the person who can authorize such a decision, shall be clearly delineated.

RESULTS

Conclusions/Summary:

The objective and organizational structure that supports document control either in hard copy or electronic media, including latest changes thereto, are controlled, reviewed for adequacy, approved for release, and distributed to and used at the location where the work is being performed was found to be adequate. Several improvement opportunities were identified to increase process efficiency and effectiveness. There are no Findings and three Observations for this objective.

Discussion:

TFC-PLN-02, *Quality Assurance Program Description*, Section 6.0 – Document Control was part of the CRAD for the assessment. Document changes of company procedures are under TFC-MD-061, *Transition of CH2M HILL Procedures and Administrative Documents to Washington River Protection Solutions* authorizing change for those procedures and administrative documents that require administrative changes to reflect the new contractual relationship between the TOC and the U.S. Department of Energy ORP.

Procedures that support the subcontractor oversight function provide several instances of conflicting direction. This issue is identified as **Observation SO-13**. In particular, TFC-ESHQ-S_SAF-C-07, *Subcontractor Oversight*, TFC-BSM-CP_CPR-C-05, *Procurement of Services* and TFC-BSM_CP_CPR-P-05, *Subcontract Closeout* are not well integrated to ensure that Buyer Technical Representatives, Contract Requestors and ESH&Q managers can perform their roles and responsibilities effectively and efficiently. For example:

a. Step 4.5 (Closure Oversight Activities) of TFC-ESHQ-S_SAF-C-07, *Subcontractor Oversight*, requires the Buyer Technical Representative and the Safety and Health, Environmental, Radiological Controls and Quality Assurance representatives to "Participate in/provide input to the subcontractor Evaluation of Subcontractor Performance." However, step 4.7 (Subcontract Closeout) of TFC-ESHQ-S_SAF-C-07 states to "Obtain input from the project team and complete the Evaluation of Subcontractor Performance for subcontracts/releases greater than $100K." In effect, conflicting direction exists for subcontracts/releases that are less than or equal to $100K. Also, the wording in TFC-BSM-CP_CPR-C-05, *Procurement of Services*, provides ambiguous direction for releases of a subcontract that individually would equal less than $100K but would result in a subcontract totaling greater than $100K.

b. Step 4.6 (Subcontractor Oversight Plan Changes) of TFC-ESHQ-S_SAF-C-07 requires the Buyer Technical Representative to "Maintain the subcontractor oversight plan in the BTR's file for the subcontractor.", with the Records Custodian identified as the "Contract Originator and/or assigned Buyer Technical Representative". However, TFC-BSM-CP_CPR-C-05 does not provide BTR file disposition direction; it states in Section 6.0 (Records) that the Records Custodian for "routine procurement files" is "Procurement".
c. Section 6.0 (Records) of TFC-ESHQ-S_SAF-C-07 identifies Subcontractor Oversight Plans as quality records. However, Section 6.0 (Records) of TFC-BSM-CP_CPR-C-05 identifies "routine procurement files" as non-quality records. If Subcontractor Oversight Plans are considered to be "routine procurement files", this direction is in conflict. If Subcontractor Oversight Plans are not considered to be "routine procurement files", there are no record requirements identified.
d. Step 4.7.3 (Subcontract Closeout) of TFC-BSM-CP_CPR-C-05 requires completion of the Evaluation of Subcontractor Performance form with accompanying "Evaluation Instructions". The Evaluation Instructions do not correlate to the Evaluation of Subcontractor Performance form contents. Also, configuration control should be implemented by processing the Evaluation of Subcontractor Performance form as a site form.
e. Step 4.5.1 of TFC-ESHQ-S_SAF-C-07 requires the BTR and ESH&Q personnel to "Participate in/provide input to the subcontractor Evaluation of Subcontractor Performance"; the procedure does not direct that the Evaluation of Subcontractor Performance be provided to the Procurement Specialist. Step 4.1.3 of TFC-BSM_CP_CPR-P-05, *Subcontract Closeout*, requires the Procurement Specialist to "Include copy of Evaluation of Subcontractor Performance in procurement file <u>if received</u> from BTR or Procurement Support". By default, the Evaluation of Subcontractor Performance would not be filed if not received.

TFC-BSM-CP_CPR-C-05, *Procurement of Services* is unclear as to whether documents identified in the procedure are to be treated as record material. This issue is identified as **Observation SO-14**. For instance:

a. Determination of Required Approval (DRA) forms provide no signature line (as expected for a record document); also, the form is not listed in section 6.0 (Records), but it is to be attached to the 'Passport Comm Log'.
b. The Workplace Substance Abuse Program (WSAP) form provides a signature line for the BTR, but then indicates "Original in BTR File" in that signature area. The procedure also instructs the BTR to attach the WSAP to Passport. Section 6.0 (Records) states that the Procurement Services organization is the records custodian for procurement files. It is not evident why a separate "BTR File" is needed, and why one copy goes into the Passport Comm Log and one into the BTR file.

c. Section 6.0 (Records) does not clearly indicate what items are records and where they are maintained as records. Is Procurement using Passport for records storage? Can a BTR use Passport for their "BTR file"?

During preparation activities for this assessment, a recent revision to TFC-ESHQ-S_SAF-C-07, *Subcontractor Oversight* Rev B-6, issued February 11, 2009 was found to have been processed incorrectly. The issue was captured in PER 09-0246 with the text as follows:

> Type of Procedure Change - Changes were made to this procedure regarding responsibilities for subcontractor oversight; however, the ADCA indicates this is a "minor revision". Changes made are beyond the scope of a "minor revision" as defined in the QAPD. TFC-PLN-02, *Quality Assurance Program Description*, defines a "minor change" as follows:
>
> > Minor changes to documents, such as inconsequential editorial corrections, do not require that the revised documents receive the same review and approval as the original documents. The following are considered editorial changes:
> >
> > 1) Correcting grammar or spelling
> > 2) Renumbering sections or attachments that do not affect the sequence of work
> > 3) Changing the title or number of the document
> > 4) Updating organizational titles.
> >
> > Training - The ADCA was completed to indicate "Classroom Training without Verification" would be given. However, this procedure was issued and effective February 11, 2009 without training provided to BTRs.
> >
> > Impacted Procedures - This procedure interfaces with TFC-BSM-CP_CPR-C-05, *Procurement Of Services*, and Form A-6003-991 (*Subcontractor Oversight Plan*). The ADCA did not indicate there were any impacted procedures, yet the changes would seem to require similar changes to the Procurement of Services procedure and possibly Form A-6003-991.

TFC-ESHQ-S_IH-C-02, *Hazard Communication*, provides an expectation to provide updated Right-to-know (RTK) information within 30-days of receipt of a new hazardous material. During this assessment, the RTK station supporting the recently re-occupied ATCO building was identified as having outdated RTK information. Follow up provided verbal input that "new inventory sheets are being worked on"; however, good business practice would provide for issuance of updated RTK information prior to building re-occupancy. A previous weakness with RTK information not being in place at several work areas/facilities was identified in PER 08-1312 (categorized as a PER/RES, identified during the 10CFR851 Worker Safety and Health Independent Assessment in

June 2008). Corrective action did not provide an extent-of-condition evaluation of other facilities, such as the ATCO shop, but instead focused on evaluation of migration to a paperless system.

TFC-ESHQ-ENV_AP-D-01, *Environmental Oversight of Subcontractors*, was cancelled in June 2006; however, the document is still listed as a company level guidance document in TFC-PLN-73, *Environmental Protection and Compliance Plan*, and should be replaced with TFC-ESHQ-S_SAF-C-07, *Subcontractor Oversight*. This issue is identified as **Observation SO-O15**.

4.6 Functional Area: Records Management

Objective:

WRPS activities ensure that the requirements for the generation, classification, storage, and maintenance of documents designated as quality assurance (QA) records are implemented.

Criteria/Requirements:

1. Records shall be identified, generated, authenticated, maintained, and their final disposition specified. Requirements and responsibilities for these activities shall be documented.
2. Requirements and responsibilities for record transmittal, distribution, retention, maintenance, and disposition shall be established and documented.
3. Records shall be distributed, handled, and controlled in accordance with written procedures.
4. Records shall be traceable to associated items and activities and accurately reflect the work accomplished or information required.
5. Individuals handling records shall protect them from damage, determination, or loss until the records are submitted to the records management system.
6. Records shall be stored in facilities, containers, or a combination thereof, constructed and maintained in a manner which minimizes the risk of damage or destruction.

RESULTS

Conclusions/Summary:

The objective that supports records management for the generation, classification, storage, and maintenance of documents designated as quality assurance (QA) records was found to generally be adequate. There is one Finding and one Observation for this objective.

Discussion:

Record retention requirements for Subcontractor Oversight Plan (screening) forms (Form A-6003-991) and scheduling requirements for subcontractor oversight activities are not implemented as described in TFC-ESHQ-S_SAF-C-07, *Subcontractor Oversight*. This issue is identified as **Finding SO-F6**. Specifically:

a. Section 6 (Records) of TFC-ESHQ-S_SAF-C-07 identifies that Subcontractor Oversight Plan (screening) forms (Form A-6003-991) are to be maintained as quality records. Interviewed Buyer Technical Representatives, responsible to implement the record retention were not aware of the quality record expectation. Contributing to this issue is an absence of direction within the procedure to implement the record retention requirement.

b. Step 4.2.3 (Post-Award Oversight Activities) of TFC-ESHQ-S_SAF-C-07 requires subcontractor oversight activities to be placed on the (WRPS) integrated assessment schedule or project schedules. Though subcontractor oversight activities are sometimes scheduled on department-level schedules, use of the integrated assessment schedule or project schedules is not implemented. As a suggested corrective action, the scheduling procedure requirement should provide increased flexibility as to the schedule means, allowing use of department schedules or tracked as E-STARS Tasks.

Passport is not recognized as a document 'record' database. TFC-BSM-IRM_DC-C-02, *Records Management*, recognizes documents maintained as records in approved TFC Records Storage Areas (RSAs), the Document Service Centers (DSCs), the Records Holding Areas (RHA), or electronically stored in the Integrated Document Management System (IDMS), but is silent on the Passport database. TFC-BSM-IRM_DC-C-02 should clearly indicate the status of Passport regarding records retention. Interviews with procurement personnel determined that Passport retains information that may be considered to be record material. This issue is identified as **Observation SO-O16**.

ATTACHMENT A
PERSONNEL CONTACTED

Name	Title	Interview	Entrance Meeting	Exit Meeting
Anderson, CE	Technical Specialist, Security & Emergency Services/Events Investigation (PAAA), ESH&Q		X	X
Armstead, M	Manager – Prime Contracts, Business Operations	X		
Beranek, F	Manager – ESH&Q	X		X
Berman, HS	Manager - Engineering		X	
Bowman, TA	Operations Support Specialist, Safety & Health, ESH&Q	X		
Brown, RL	Performance Assurance/Corrective Action, ESH&Q		X	X
Burt, DL	Manager - EVMS Cert & Assurance, Project Integration	X		
Butler, RE	Safety URSWA, Construction and Commissioning, Project Integration	X		
Calderon, LM	Technical Specialist, Industrial Safety, Safety & Health, ESH&Q	X		X
Colosi, KA	Manager - IHLW Program, WTP Support	X		
Conrad, JS	Environmental Specialist, Environmental programs, ESH&Q	X		
Farner, ML	Construction and Commissioning, Project Integration			X
Flasch, MP	Performance Assurance/Corrective Action, ESH&Q		X	X
Flowers, LA	Safety Specialist – IS/IH, ESH&Q Business Operations, Base Operations	X		
Gaydosh, WL	Manager – Industrial Safety, ESH&Q	X		
Hatcher, KA	Manager – Procurement Services, Business Operations	X		
Janecke, JR	Procurement Specialist, Procurement Services, Business Operations	X	X	
Keith, LJ	Manager – Training, Workforce Resources	X		
Kubie, DL	Training Specialist, Training, Workforce Resources		X	
Kummer, DA	Training Specialist, Training, Workforce Resources	X		
Le, TM	Health Physicist, Radiological Controls, ESH&Q	X		
Lepka, SJ	Administrative Specialist - Project Controls, WTP Support	X		

ATTACHMENT A
PERSONNEL CONTACTED

Name	Title	Interview	Entrance Meeting	Exit Meeting
Lesko, AC	Manager - Records & Document Control, Business Operations	X		
Lesko, KF	Manager – Construction and Commissioning, Project Integration	X	X	
Lindholm, MA	Manager – SST Retrieval and Closure		X	
Maciuca, C	Manager – Performance Assurance/Corrective Action, ESH&Q		X	
Marshall, D	Accountant, Finance, Business Operations	X		
Martin, LK	Operations Specialist, Project Construction, Base Operations	X		X
May, SM	Project Cost Analyst, Project Controls, SST Retrieval and Closure	X		
McElroy, ML	Manager – Quality Assurance Services, ESH&Q	X		X
McLellan, GW	Manager - Project Management Systems, Project Integration	X		
Meyers, S	EFSI, Quality Assurance	X		
Netolicky, RA	Quality Assurance Engineer, Quality Assurance Services, ESH&Q	X		
Penick, LR	Operations Support Specialist, Performance Assurance/Corrective Action, ESH&Q	X	X	X
Peters, NL	Technical Specialist, Security & Emergency Services/Events Investigation, ESH&Q	X		
Powers, MJ	Safety Specialist, Safety/IH, ESH&Q Single-Shell Tank, SST Retrieval & Closure	X		
Reynolds, KD	EFSI, Sampling And Well Services	X		
Robinson, JM	Manager – Procurement Services, Business Operations	X	X	
Rolph, JT	Manager – Radiological Controls, ESH&Q	X		
Sax, SM	Manager – Project Operations		X	
Schaleger, JP	Safety Specialist, Industrial Safety, ESH&Q	X		
Silvia, MJ	Performance Assurance/Corrective Action, ESH&Q		X	X
Stickney, RG	Engineer, Central Design Authority and Standards, Engineering	X		
Stredwick, JR	Construction and Commissioning, Project Integration	X		

ATTACHMENT A
PERSONNEL CONTACTED

Name	Title	Interview	Entrance Meeting	Exit Meeting
Sydnor, H	Scientist, Operations Support – Vadose, SST Retrieval & Closure	X		
Taber, TK	Operations Support Specialist, Industrial Safety, ESH&Q	X		
Tifft, SR	Environmental Specialist, Environmental Compliance, ESH&Q	X		
Vacca, JE	Manager – Information Resources, Business Operations	X		
Van Meighem, JS	Technical Specialist – Interface Management, Project Integration	X		
Voogd, JA	Manager - Environmental Compliance, ESH&Q	X		
Wooley, TA	Environmental Specialist, Environmental Compliance, ESH&Q	X		
Zane, RW	Energy Solutions, Industrial Safety	X		

ATTACHMENT B
DOCUMENTS REVIEWED

- DOE Order 414.1C, *Quality Assurance*, approved 06-17-05
- 10CFR830, Subpart A, *Quality Assurance Requirements*
- INPO 05-002, *Human Performance Tools for Engineers – Practices for Anticipating, Preventing, and Catching Engineering Errors* (Vendor Oversight section)
- WRPS Contract DE-AC27-08RV14800, Modification No. M009, Section B, *Supplies or Services and Prices/Costs* and Section J-6, *Small Business Subcontracting Plan*
- Administrative Interface Agreement for Training Records Under Memorandum of Agreement No. CHG-FMOA-2001
- Interface Control Document between The Tank Farm Contractor and the Fluor Hanford Water Utilities Distribution System
- Washington River Protection Solutions LLC and Energy Solutions Federal Services LLC Affiliate Agreement for the DOE Tank Operations Contract #DE-AC-27-08RV14800
- Washington River Protection Solutions LLC and URS-Washington Division Affiliate Agreement for the DOE Tank Operations Contract #DE-AC-27-08RV14800
- Memorandum of Agreement MOA-WRPS-CHPRC-2008, Rev. 0, *Performance and Payment of Services*
- Memorandum of Agreement TOC-MOA-FH-0004, Rev. 0, *Performance and Payment of Services*
- Memorandum of Agreement TOC-MOA-PNNL-0002, Rev. 0, *Performance And Payment Of Services*
- Request for Offsite Services, Job No.29633_FY 2009 ROS No. 36472-03, *Characterize The Aerial Extent Of Mobile Contaminants For Placement Of Interim Barrier Using The Hydraulic Hammer Unit*
- Statement Of Work, Requisition #: 36472, *Drilling and Related Characterization Services*, Revision Number 0,Date September 9, 2008
- Subcontractor Oversight Plan for Contract Requisition 182012, dated 02/10/2009, *Design and Fabrication of Mobile Retrieval Arm System*
- *Audits/Surveillances,* DWO-QAP-001, dated 5/15/06, revision 9 Energy Solutions Condition Report FW-TSV-XR-08-003
- Energy Solutions Federal Services Internal Memo, Quality Assurance Internal Surveillance Report FS-08-IS-002, *Safety Surveillance of Energy Solutions Employee Performance at UPR 81*
- Energy Solutions Federal Services, Internal Memo CAM-08-4955, Quality Assurance Internal Surveillance Report FS-08-IS-001, *Completion Document for 241-UDirect Push Characterization Services*
- Energy Solutions Surveillance Report FS-08-IS-001, dated January 9, 2008, *Completion Document for 241-U Farm Direct Push Characterization Services*
- Energy Solutions Surveillance Report FS-08-IS-002, dated April 15, 2008, *Safety Surveillance of Energy Solutions Employee Performance at UPR-81*
- RPP-MP-003, Rev. 5c, *Integrated Environment, Safety, and Health Management System Description for the Tank Farm Contractor*
- RPP-8411, Rev. 1, *Washington River Protection Solutions Procurement Process Description*

ATTACHMENT B
DOCUMENTS REVIEWED

- *Training Implementation Matrix Per DOE Order 5480.20A*, Rev. 20A-3 dated September 2005
- *FY2009 – WRPS Integrated Assessment Schedule*, dated January 12, 2009
- 24590-WTP-PL-MG-01-001, Rev. 2, *Interface Management Plan* (WTP)
- *Washington River Protection Solutions Parent Organization Support Plan FY 2009*, approved August 29, 2008
- *Washington River Protection Solutions (WRPS) General Provisions*, dated November 20, 2008
- *Washington River Protection Solutions (WRPS) Commercial General Provisions*, dated November 20, 2008
- *Washington River Protection Solutions (WRPS) On-Site Work Provisions*, dated February 10, 2009
- *Washington River Protection Solutions Evaluated Supplier List*, dated October 28, 2008 (including the *Fluor Hanford Evaluated Supplier List*, dated February 13, 2009)
- HNF-MP-5184, Rev. 7, *Washington River Protection Solutions Radiation Protection Program*
- TFC-PLN-02, Rev. E-2, *Quality Assurance Program Description*
- TFC-PLN-43, Rev. A-13, *Tank Operations Contractor Health and Safety Plan*
- TFC-PLN-47, Rev. B-2, *Worker Safety and Health Program*
- TFC-PLN-55, Rev. A-2, *Industrial Hygiene Safety Management Program Plan*
- TFC-PLN-58, Rev, C, *Chemical Management Plan*
- TFC-PLN-73, Rev. B-5, *Environmental Protection and Compliance Plan*
- TFC-PLN-83, Rev. B, *Assurance System Program Description*
- TFC-PLN-102, Rev. A, *TOC Interface Management Plan*
- TFC-POL-16, Rev. B, *Integrated Safety Management System Policy*
- TFC-BSM-AC-C-04, Rev. B-4, *Intercompany Work Exchange Agreements*
- TFC-BSM-CP_CPR-C-02, Rev. A-11, *Noncompetitive Procurement Justification*
- TFC-BSM-CP_CPR-C-05, Rev. H-4, *Procurement of Services*
- TFC-BSM-CP_CPR-C-06, Rev. G-4, *Procurement of Items (Materials)*
- TFC-BSM-CP_CPR-C-09, Rev. B-13, *Supply Chain Process*
- TFC-BSM-CP_CPR-C-17, Rev. A-5, *Interface Management*
- TFC-BSM-CP_CPR-D-02-10, Rev. A-4, *Construction Contracting*
- TFC-BSM-CP_CPR-D-02-13, Rev. A-2, *Services from Other Hanford Prime Contractors*
- TFC-BSM-CP_CPR-D-04.1, Rev. A-2, *Good Subcontract Administration Practices*
- TFC-BSM-CP_CPR-D-04.5, Rev. A-4, *Subcontract Termination*
- TFC-BSM-CP_CPR-D-05.1, Rev. A-4, *Close-out Process*
- TFC-BSM-CP_CPR-D-16, Rev. B, *Preparation, Negotiation, Administration, and Completion of Performance Based Incentives*
- TFC-BSM-CP_CPR-P-04, Rev. A-10, *Subcontract Administration*
- TFC-BSM-CP_CPR-P-05, Rev. B-3, *Subcontract Closeout*
- TFC-ESHQ-S_SAF-C-07, Rev. B-6, *Subcontractor Oversight*
- TFC-ESHQ-Q_ADM-C-01, Rev. A-3, *Graded Quality Assurance*

ATTACHMENT B
DOCUMENTS REVIEWED

- TFC-ESHQ-Q_ADM-C-09, Rev. A-3, *Supplier Quality Assurance Program Evaluation*
- TFC-ESHQ-Q_PP-P-02, Rev. D-3, *Quality Assurance Surveillances*
- TFC-PRJ-CM-C-01, Rev. A-13, *Construction Management*
- TFC-PRJ-CM-C-05, Rev. A-3, *Construction Subcontractor Progress Meetings*
- TFC-PRJ-CM-C-08, Rev. B-2, *Construction Completion and Turnover*
- TFC-PRJ-CM-C-015, Rev. A-1, *Construction Subcontractor Closeout*
- Form A-6003-991, Rev. 06/05, *Subcontractor Oversight Plan* (Screening Form)
- Key Word Search 'Interface' of the Problem Evaluation Request Database for the 3-Year Period Ending January 30, 2009
- Key Word Search 'Oversight' of the Problem Evaluation Request Database for the 3-Year Period Ending January 29, 2009
- Key Word Search 'Subcontractor' of the Problem Evaluation Request Database for the 3-Year Period Ending January 29, 2009
- *Independent Assessment of Worker Safety and Health Program, FY2008-CH2M-I-0005, dated June 24, 2008*
- *PAAA Program Review/Self Assessment, Management Assessment Report FY2008-SHQ-M-0159*, dated May 29, 2008
- *Subcontractor Oversight Process,* Management Assessment, FY2007-SHQ-M-0135 dated March 26, 2007
- *Interface Program – Management Assessment Report FY2006-SPPC-M-0150*, dated September 26, 2006
- *CH2M HILL Corporate Independent Assessment of CHG Hanford Tank Farm Activities*, dated January 13, 2006
- *Contractor Reporting of Non-Compliances, Management Assessment FY2006-PAAA-M-0156*, dated December 28, 2005
- *QA Management Assessment of Subcontractor/Vendor QA Implementation Plans – FY2006-QA-M-0122*, dated December 21, 2005
- *Management Assessment of Contractor Flow Down of Requirements*, FY2005-PA-M-0175, dated June 5, 2005
- *River Protection Project Quality Assurance Audit Report RPP-A-02-09, Revision 0, Construction Quality Requirement Flow-Down and Subcontractor Oversight*, dated November 25, 2002

Ownership matrix

TABLE OF CONTENTS

1.0 PURPOSE AND SCOPE 2
2.0 IMPLEMENTATION 2
3.0 RESPONSIBILITIES 2
3.1 Contract Requestor 2
3.2 Safety & Health, Environmental, Quality Assurance, and Radiological Controls 2
4.0 PROCEDURE 3
4.1 Pre-Award Oversight Activities 3
4.2 Post Award Oversight Activities 5
4.3 Mobilization Oversight Activities 5
4.4 Ongoing Oversight Activities 6
4.5 Closure Oversight Activities 8
4.6 Subcontractor Oversight Plan Changes 8
5.0 DEFINITIONS 8
6.0 RECORDS 8
7.0 SOURCES 9
7.1 Requirements 9
7.2 References 9

TABLE OF FIGURES

Figure 1. Subcontractor Oversight Process. 11

TABLE OF TABLES

Table 1. Safety And Health Risk Screening Criteria. 12

TABLE OF ATTACHMENTS

ATTACHMENT A – SAFETY AND INDUSTRIAL HEALTH CHECKLIST 14
ATTACHMENT B – RADIOLOGICAL CONTROL CHECKLIST 15
ATTACHMENT C – ENVIRONMENTAL CHECKLIST 16
ATTACHMENT D – QUALITY ASSURANCE CHECKLIST 17

1.0 PURPOSE AND SCOPE
(7.1.1, 7.1.2, 7.1.3, 7.1.4, 7.1.5.b, 7.1.6, 7.1.8, 7.1.9, 7.1.10, 7.1.11, 7.1.12)

Oversight of subcontractor safety, health, radiological control, environmental, and Quality Assurance (QA) ensures compliance with the Tank Operations Contractor requirements. These requirements are contained in TFC-PLN-43 (Tank Operations Contractor Health and Safety Plan), RPP-MP-003 (Integrated Environment, Safety, and Health Management System Description for the Tank Operations Contractor), TFC-PLN-55 (Industrial Hygiene Safety Management Program Plan), TFC-PLN-47 (Worker Safety and Health Program), HNF-MP-5184 (Radiation Protection Program), TFC-PLN-73 (Environmental Protection and Compliance Plan), TFC-PLN-02 (Quality Assurance Program Description), and On-Site Work Provisions, as applicable.

This procedure describes the methods and assigns responsibilities for obtaining buy in to the WRPS programs for, developing, monitoring, and evaluating: subcontractor safety, health, radiological, environmental, and quality requirements and programs by Washington River Protection Solutions LLC (WRPS) for subcontracted and Recovery Act (RA) work. This procedure does not apply to staff augmentation contracts.

2.0 IMPLEMENTATION

This procedure is effective on the date shown in the header.

3.0 RESPONSIBILITIES

3.1 Contract Requestor

The contract requestor ensures the general site and project-specific safety, health, radiological, environmental, and quality requirements are included in the contract or statement of work.

3.2 Safety & Health, Environmental, Quality Assurance, and Radiological Controls
(7.1.5.a, 7.1.14)

The ESH&Q Manager is responsible for the Subcontractor Oversight program and establishing ownership and clear roles and responsibilities within the disciplines of the ESH&Q organization. Safety & Health, Environmental, Quality Assurance, and Radiological Controls personnel are jointly responsible for identifying required subcontractor oversight activities and providing those requirements to the buyer's technical representative (BTR) as specified below. When required, they will develop a Subcontractor Oversight plan and provide it to the BTR and Procurement for transmittal to the Subcontractor.

Safety & Health personnel are responsible for defining and resolving safety and health issues; providing evaluations of hazards; and verifying compliance with TFC-PLN-43, TFC-PLN-47, TFC-PLN-55, and RPP-MP-003.

Environmental personnel are responsible for identifying and resolving environmental issues and performing surveillances to verify subcontractor compliance with TFC-PLN-73. (7.1.13)

QA personnel are responsible for defining QA issues and performing surveillances and assessments of subcontractor QA programs and implementation, per TFC-PLN-02.

Radiological Controls personnel are responsible for defining radiological issues and performing surveillances and assessments of subcontractor radiological programs and implementation, per HNF-MP-5184.

Procurement personnel are responsible for communicating all information/findings produced by WRPS oversight activities to the subcontractor for appropriate action and subsequently relaying subcontractor activities/corrective actions to the oversight organizations.

4.0 PROCEDURE

Figure 1 provides an overview of the subcontractor oversight process.

4.1 Pre-Award Oversight Activities

Verification and Approval, an oversight process, may also be implemented by the TOC to ensure that these robust processes are being followed. Deliverables identified in the SOW are reviewed and surveillance activities identified to verify implementation of program requirements flowed down **from** the contract. QA personnel perform surveillances and assessments of subcontractor QA programs and implementation and monitor subcontractor QA compliance in accordance with any subcontractor oversight plans. (7.1.2.b)

Contract Requestor and Buyer's Technical Representative	1. Determine the involvement by other organizations (i.e., Safety & Health, QA, Environmental, and Radiological Controls).
Contract Requestor; Buyer's Technical Representative; Safety & Health, Environmental, and Radiological Controls Representatives; and Quality Assurance Engineer	2. Analyze the scope of work to identify safety, health, environmental, radiological, and quality oversight actions. a. Review the project master submittal list, statement of work, contract, construction specifications, On-Site Work Provisions , etc., as applicable. b. Determine the risk each impacted discipline will experience due to the work activity(s). c. See Table 1 for risk screening criteria for S&H.
Safety and Health Representative	3. Review/validate the Subcontractor ESH&Q Representation form submitted by potential subcontractors. (Reference TFC-BSM-CP_CPR-P-02.) NOTE: If the Subcontractor ESH&Q Representation of projected awardee is not acceptable, the potential subcontractor may be required to present a corrective action plan and increased oversight by the appropriate ESHQ representatives will be written into the oversight plan.

Contract Requestor

4. Complete the Subcontractor Oversight Plan (A-6003-991) screening Section I to determine if a subcontractor oversight plan is required.

   a. If a formal subcontractor oversight plan is not required, sign the form indicating that no subcontractor oversight plan is required and exit this procedure.

      Send the form to the BTR and procurement specialist for inclusion in Comm. Log

   b. Notify the BTR a subcontractor oversight plan is required.

   c. Receive the contract requisition for review and approval.

Contract Requestor; Safety & Health, Environmental, and Radiological Controls Representatives; and Quality Assurance Engineer

5. Prior to the contract award develop the subcontractor oversight plan. The plan is developed with a graded approach dependent on the work complexity and risk levels.

   NOTE: For RA work, Oversight Plans are required and activities documented on Field Surveillance forms

Contract Requestor; Safety & Health, Environmental, and Radiological Controls Representatives

   a. List the safety, health, environmental, and radiological control oversight activities as applicable to Statement of Work in Section II of the Subcontractor Oversight Plan (A-6003-991). See Attachments A, B, and C.

   b. Consider uniqueness of work, familiarization with tank farms, whether the work is RA scope, whether there are lower tier subcontractors anticipated, and risk level to determine depth and frequency of the oversight plan.

   c. Obtain discipline-specific approvals in Section II.

Contract requestor; Quality Assurance Engineer

   d. Identify supplier QA oversight activities for each QL-1 or QL-2 contract/release issued after contract award (see Attachment D) in Section II of the Subcontractor Oversight Plan (A-6003-991) taking into consideration:

      - Review and approval of deliverables identified in the Statement of Work.

      - Surveillance activities to verify implementation of program requirements flowed down in the contract per TFC-ESHQ-Q_PP-P-02.

      - Surveillance activities to verify implementation of Subcontractor Quality Assurance Program Implementation Plan (if used), per TFC-ESHQ-Q_ADM-C-09.

e. Obtain QA manager/lead approvals in Section II.

f. Send electronic version of completed subcontractor oversight plan to BTR.

4.2 Post Award Oversight Activities

Contract Requestor Safety & Health, Environmental, and Radiological Controls Representatives; and Quality Assurance Engineer

1. Develop an oversight file for each subcontractor and maintain the plan documentation of all oversight activities and responses to any findings and issues.

   - Safety & Health personnel set up their file in accordance with this procedure.
   - Environmental personnel set up their file in accordance with RPP-ENV-32852.
   - Radiological Controls personnel set up their file in accordance with TFC-ESHQ-AP-C-03.
   - Quality Assurance Engineers set up their file in accordance with TFC-ESHQ-Q_PP-P-02 and TFC-ESHQ-Q_ADM-C-09.

Contract Requestor; Buyer's Technical Representative; Safety & Health, Environmental, and Radiological Controls Representatives; and Quality Assurance Engineer

2. Attend the pre-construction (or pre-work) conference (optional for service contracts) (see TFC-PRJ-CM-C-02).

4.3 Mobilization Oversight Activities

Safety & Health Representative(s)

1. Walk down the jobsite where the work is to be performed to facilitate development of a work site hazard analysis (A-6004-101) or safety plan (A-6004-102). The hazard analysis will contain: (7.1.1, 7.1.7)

   - Foreseeable hazards and planned protective measures
   - Further hazards revealed by supplemental site information
   - Drawings or other documentation of protective measures where OSHA would require a professional engineer or other qualified professional
   - Listing of competent persons by name, where required for workplace inspections of the construction activity.

Manager or Manager Representative	2.	Ensure that employee job task analyses for subcontractor personnel have been approved by the subcontractor personnel and project Industrial Hygienist.
Safety & Health, Environmental, and Radiological Controls Representatives; and Quality Assurance Engineer	3.	Ensure that training and qualification requirements identified in the statement of work, the work site hazard analysis or safety plan, and the employee job task analyses have been met by the subcontractor personnel, as applicable to the discipline.
Environmental Representative	4.	Document any areas of environmental concern in the left hand column of the Environmental Subcontractor Surveillance Form (A-6003-262), and provide a copy to the project manager and subcontractor.
Quality Assurance Engineer	5.	Ensure that any Subcontractor Quality Assurance Program Implementation Plan actions are completed as required per TFC-ESHQ-Q_ADM-C-09.

4.4 Ongoing Oversight Activities

Safety & Health Representatives

1. Review the subcontractor's daily safety inspection records.

2. Review monthly reports submitted in accordance with On Site Work Provisions, Section 2.5, Reporting and Record Keeping.

3. Monitor the subcontractor's compliance with the safety and health requirements during the period of performance.

   a. Provide oversight of the work planning process and work site hazard analysis of the subcontract project.

   b. Ensure the subcontractor conducts daily inspections of the work site and identifies hazards and instances of non-conformance with safety and health requirements.

   c. Conduct field oversight in accordance with the subcontractor oversight plan for discipline-specific activities.

      1) Accompany the subcontractor's safety representative on his/her daily work site safety inspections at the frequency noted in the subcontractor Safety and Health oversight plan.

      2) Order the subcontractor to stop work if serious or repeated violations occur.

         NOTE: Work will not be allowed to progress until suitable action has been taken.

a) Stop work in an emergency, when life or property is threatened. In such situations, the shift office shall be notified and the Procurement Specialist shall confirm the action in writing and make sure the proper notifications and documentation are completed and copies included in the project file.

b) Ensure that the subcontractor safety representative has submitted all incident forms and safety reports, as required, and that they have been distributed, as applicable.

3) Document oversight findings and evaluation of potential trends on a Problem Evaluation Request in accordance with TFC-ESHQ-Q_C-C-01.

4. Ensure that safety discrepancies, required corrective actions, and discrepancies that cannot be immediately corrected are documented by the subcontractor safety representative in his/her daily inspection reports.

5. Document in writing discrepancies identified that cannot be addressed immediately during oversight plan implementation, and send them to the Procurement Specialist.

Procurement Specialist

6. Send all documented discrepancies to the subcontractor

a. Instruct the subcontractor to respond in writing with the disposition and completion date.

b. Submit all subcontractor communications regarding corrective actions to the appropriate oversight group.

Safety & Health Representatives

7. For construction subcontractors, review the subcontractor safety and health performance with the subcontractor safety and health representative at the construction subcontractor progress meeting (see TFC-PRJ-CM-C-05).

Radiological Controls Representative

8. Conduct Management Observation Program (MOP) reviews by defining a plan, conducting MOPs in accordance with TFC-ESHQ-AP-C-03, and document findings in a Problem Evaluation Request in accordance with TFC-ESHQ-Q_C-C-01.

Environmental Representative

9. Monitor subcontractor environmental compliance in accordance with the subcontractor oversight plan and RPP-ENV-32852.

Quality Assurance Engineer

10. Monitor subcontractor QA compliance in accordance with the subcontractor oversight plan and TFC-ESHQ-Q_PP-P-02.

4.5 Closure Oversight Activities

Buyer's Technical Representative, Safety & Health, Environmental, and Radiological Controls Representatives; and Quality Assurance Engineer	1.	Participate in/provide input to the subcontractor Evaluation of Subcontractor Performance.
	2.	Ensure exposure monitoring and other reports (e.g., noise, chemical, dosimetry monitoring, environmental monitoring, inspection reports, etc.) are closed out as applicable.
Buyer's Technical Representative and Safety & Health Representatives	3.	Determine subcontractor exit requirements (e.g., employee job task analysis, medical monitoring, exit physicals, etc.) are completed as applicable. See Check-in/Check-out form.

4.6 Subcontractor Oversight Plan Changes

Buyer's Technical Representative	1.	Notify the Safety and Health, Environmental, Radiological Controls, and Quality Assurance Engineers as appropriate when the Scope of Work is modified.
Safety & Health, Environmental, and Radiological Controls Representatives; and Quality Assurance Engineer	2.	When a change to the subcontractor oversight plan is needed due to recognition of a new hazard or change in work scope, provide an update of the oversight plan to the BTR and procurement.
Buyer's Technical Representative	3.	Insert any revisions to the subcontractor oversight plan in the PassPort comm log for the subcontract.

5.0 DEFINITIONS

Contract Requestor. Manager or Control Account Manager with budget authority to authorize work.

6.0 RECORDS

The following records are generated during the performance of this procedure:

Record Description	Vital Record Y/N	QA Record Y/N	QA Record Retention L/NP	NARA Retention Schedule	Other Retention Requirements	Records Custodian
Subcontractor Oversight Plan (A-6003-991)	N	Y	NP	ADM-17.32.a	N/A	Procurement

The identified record custodian is responsible for record management in accordance with TFC-BSM-IRM_DC-C-02.

7.0 SOURCES

7.1 Requirements

1. 10 CFR 851, "Worker Safety and Health Program."

2. HNF-MP-5184, "CH2M HILL Hanford Group, Inc. Radiation Protection Program."

3. NTS-RP-CHG-TANKFARM-2000-0014, "Management and Independent Assessment," Corrective Action 02.

4. RPP-PLAN-39433, "Procurement, Construction, and Acceptance Testing Plan," Section 4.0, "Construction Management."

5. RPP-PLAN-39434, "Construction and Acceptance Testing Program."

   a. Section 5.1, "Verification and Approval."
   b. Section 5.2, "Acceptance Testing Plans and Procedures."

6. RPP-MP-003, "Integrated Environment, Safety, and Health Management System Description for the Tank Operations Contractor."

7. TFC-ESHQ-S_SAF-C-02, "Job Hazard Analysis."

8. TFC-PLN-02, "Quality Assurance Program Description."

9. TFC-PLN-10, "Assessment Program Plan."

10. TFC-PLN-43, "Tank Operations Contractor Health and Safety Plan."

11. TFC-PLN-47, "Industrial Safety and Health Management Program Plan."

12. TFC-PLN-55, "Industrial Hygiene Safety Management Program Plan."

13. TFC-PLN-73, "Environmental Protection and Compliance Plan."

14. TFC-PLN-91, "Industrial Safety Management Program Plan."

7.2 References

1. HNF-5183, "Tank Farm Contractor Radiological Control Manual."

2. On-Site Work Provisions.

3. RPP-ENV-32852, "Environmental Surveillance/Compliance Inspection Process Checklist."

4. TFC-BSM-CP_CPR-C-05, "Procurement of Services."

5. TFC-BSM-CP_CPR-P-02, "Solicitation Process."

6. TFC-BSM-CP_CPR-P-03, "Selection and Award."

7. TFC-BSM-CP_CPR-P-04, "Subcontract Administration."

8. TFC-ESHQ-AP-C-03, "Management Observation Program."

9. TFC-ESHQ-Q_ADM-C-01, "Graded Quality Assurance."

10. TFC-ESHQ-Q_ADM-C-09, "Supplier Quality Assurance Program Evaluation."

11. TFC-ESHQ-Q_C-C-01, "Problem Evaluation Request."

12. TFC-ESHQ-Q_PP-P-02, "Quality Assurance Surveillances."

13. TFC-OPS-MAINT-C-01, "Tank Operations Contractor Work Planning."

14. TFC-PRJ-CM-C-01, "Construction Management."

15. TFC-PRJ-CM-C-02, "Construction Preconstruction Conference."

16. TFC-PRJ-CM-C-05, "Construction Subcontractor Progress Meetings."

Figure 1. Subcontractor Oversight Process.

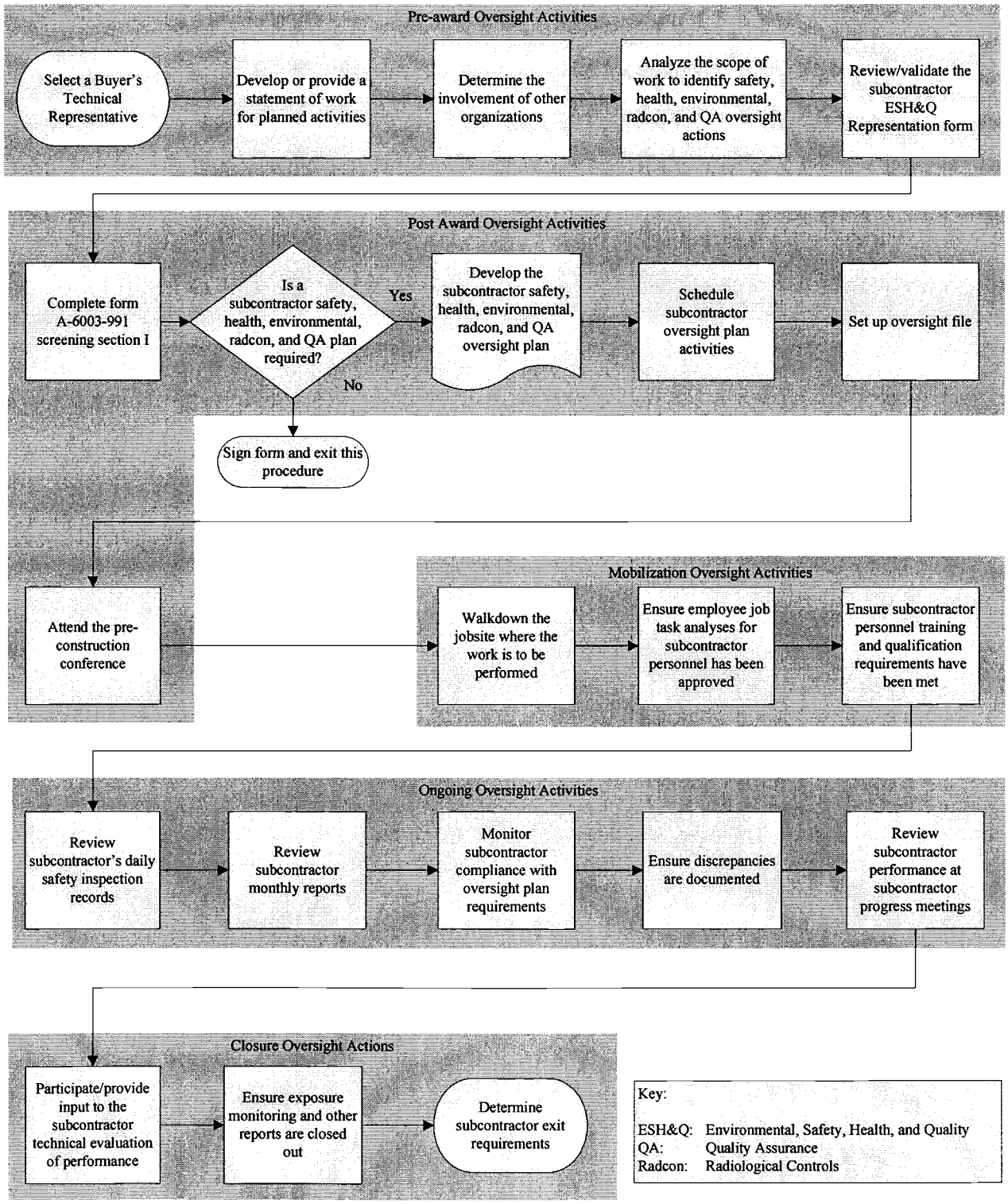

Table 1. Safety And Health Risk Screening Criteria.

The following table is provided for specific work activities that may present an increased risk of injury or bodily harm when hazards cannot be mitigated, whenever a hazard can be controlled or eliminated the risk category for that particular hazard is lessened or eliminated. Safety and Health review and oversight is required when these thresholds of activities are met.

Industrial Safety Hazard Class	
1. Walking/Working Surfaces	- Work surfaces that have unprotected holes or openings where there is a drop > 4 feet - Un-barricaded openings in walls or guardrails where there is a drop > 4 feet - Every work platform, without toe boards, > 5 feet in height where tools or material can fall to a lower level
2. Electrical Work	Work on energized systems > 50 volts
3. Confined Spaces	Confined Space Work
4. Elevated Work	- Work requiring fall protection equipment (PFAS) - Work requiring engineered fall protection
5. Hoist & Rigging	- Hoist and rigging activities adjacent to medium or high risk work sites - Hoist and rigging work requiring a Special or Critical Lift Plan
6. Excavations, digging, trenching	- Excavations over 5' in depth where personnel will use a trench box and/or shoring All excavations where workers will be digging within 2' feet of buried utilities, with ground scans
7. Energy	- Work on pressurized systems: Air > 35 psi Temperature > 200F Fluids > 500 #
8. Work Zones	- Work location known to contain harmful insects, rodents, reptiles that cannot be controlled - Work involving demolition of structures - When working alone in remote locations with limited means of communication - Work in locations where lighting conditions are inadequate and incapable of improvement - Work outdoors during periods of snow and ice accumulation, or wind conditions above 25 mph
9. Temperature Extremes	- Work in hot environments that require 1 layer of protective clothing - Extended work in cold work environments

Table 1. Safety And Health Risk Screening Criteria. (cont.)

The following table is provided for potential work activity exposures that may present an increased risk of illness when the exposure cannot be mitigated.

Potential Work Activity Exposure	Work Inside Vapor Control Zones Tank Waste Disturbing Activities Use of Respiratory Protection Use of Hearing Protection Asbestos Beryllium Silica Carcinogens Solvents Heavy Metals (i.e. lead, chromium, cadmium, nickel, arsenic, cobalt, copper, mercury, silver) Welding/Cutting

ATTACHMENT A – SAFETY AND INDUSTRIAL HEALTH CHECKLIST

The following checklist is not all-inclusive. Items should be added or deleted where they do not apply; however, careful considerations should be given to each item and a conscious decision made to include items to ensure adequate subcontractor oversight. Refer also to OSHA standards and the on-line ESH&Q manual for the procedures and standards that may apply.

	Safety and Health Program
	Personal protective equipment
	Flammable and combustible materials
	Hand and portable powered tools
	Hand tools and equipment
	Portable power operated tools and equipment
	Powder actuated tools
	Lockout/tagout procedures
	Confined spaces
	Electrical
	Walking-working surfaces (e.g., general, walkways, floor and wall openings, stairs and stairways, elevated surfaces)
	Hazard communication
	Emergency response procedures
	Excavation, trenching, and shoring
	Responding and reporting injuries, illnesses, and accidents
	Respirator protection
	Heat stress control
	Ergonomics
	Hearing conservation program
	Lead control program
	Fall protection
	Hoisting and rigging
	Job hazard analysis
	Portable ladders
	Transportation safety
	Safety inspections
	Concrete and masonry construction
	Erecting steel structures
	Safety signs, tags, barriers, and color coding
	Safety showers and eyewash stations
	Receiving, storing and handling of chemicals
	Storing, using, handling, and transporting compressed and liquefied gases
	Personal and area monitoring
	Safety meetings

ATTACHMENT B – RADIOLOGICAL CONTROL CHECKLIST

The following checklist is not all-inclusive. Items should be added or deleted where they do/do not apply; however, careful considerations should be given to each item and a conscious decision made to include items to ensure adequate subcontractor oversight. Refer also to HNF-MP-5184, HNF-5183, and applicable Radiological Control procedures and standards that may apply.

	ALARA
	Work planning
	Source control
	Radiation generating devices
	Conduct of radiological operations
	Pre-job briefing

ATTACHMENT C – ENVIRONMENTAL CHECKLIST

The following checklist is not all-inclusive. Items should be added or deleted where they do not apply; however, careful considerations should be given to each item and a conscious decision made to include items to ensure adequate subcontractor oversight. Refer also to TFC-PLN-73 and the on-line ESH&Q manual for additional environmental procedures and standards that may apply.

	Environmental permits
	Environmental monitoring
	Environmental requirements
	Potential environmental impacts
	Equipment labeling
	Equipment condition
	Equipment calibration stickers
	Equipment tests

ATTACHMENT D – QUALITY ASSURANCE CHECKLIST

The following checklist is not all-inclusive. Items should be added or deleted where they do not apply; however, careful considerations should be given to each item and a conscious decision made to include items to ensure adequate subcontractor oversight. Refer also to TFC-PLN-02 and the on-line ESH&Q manual for QA procedures and standards that may apply.

	Design items and processes use sound engineering/scientific principles and appropriate standards.
	Incorporation of applicable requirements and design bases in design work and design changes.
	Control and identification of design interfaces.
	Independent verification and validation of design product adequacy.
	Design verification and validation prior to approval and implementation of the design.
	Documents used to describe processes, specify requirements, or establish design are being properly prepared, reviewed, approved, and revised.
	Records are being properly specified, prepared, reviewed, approved, and maintained.
	Work is being performed by trained, qualified, and proficient personnel.
	Processes are being used that detect and prevent quality defects.
	Items, services, and processes that don't meet established requirements are identified, controlled, and corrected.
	Work is being performed consistent with technical standards, administrative controls, and other hazard controls.
	Items are being controlled to ensure their proper use.
	Items are being maintained to prevent damage, loss, or deterioration.
	Equipment used for process monitoring or data collection is being properly maintained and calibrated.
	Procured items and services meet established requirements.
	Sub-tier suppliers are selected based on specified criteria.
	Documents used to describe processes, specify requirements, or establish design are properly prepared, reviewed, approved, and revised.
	Processes exist for identifying items, services, and processes needing improvement.
	Correction of problems and work includes action to prevent recurrence.
	Processes exist to ensure sub-tier suppliers continue to provide acceptable items and services.

WHY Analysis

Programmatic Ownership of TFC-ESHQ-S_SAF-C-07 had not been established

WHY

Contract transition activities did not recognize the need for changing ownership to someone who would have responsibility of the whole program.

WHY

There had been differing owners between QA and Safety programs due to organizational changes. Facility Area Managers had changed from a Level 1 Manager to a Level 3 Manager when the Level 1 Manager had left the company.

WHY

The Subcontractor Oversight program is unique in that the procedure was developed by combining discipline specific Subcontractor Oversight Programs into one.

WHY

The procedure was combined to provide efficiency and consistency to the program.

Save

Problem Evaluation Request (PER)

WRPS-PER-2009-0473
In Process/Work

PER No	Date of Discovery	Time of Discovery (24:00)	Project
WRPS-PER-2009-0473	03/27/2009	10:00	Procurement

Location

All Tank Farms

How Was Problem Discovered

Independent Assessment

Description of Concern or Problem

An Independent Assessment of Subcontract Management and Oversight was conducted from February 23 through March 5, 2009. The assessment resulted in six findings and sixteen observations. Details are provided in the attached assessment report.

Finding SO-F2 Assessment activities have not been performed over the past several years to ensure that implementation of the subcontractor management and oversight process is achieving its desired objective. Core Function 5 (Provide Feedback and Continuous Improvement) of Integrated Safety Management as described in RPP-MP-003, Integrated Environment, Safety, and Health Management System Description for the Tank Farm Operations Contractor, establishes expectations for feedback and continuous process improvement.

Requirement Not Satisfied	Source Document Number
Core Function 5 (Provide Feedback and Continuous Improvement) of Integrated Safety Management as described in RPP-MP-003	FY2009-WRPS-I-0002
Equipment Identification Number	**System Identification**

Immediate actions Taken or Planned

Discussed the issue with the Manager - ESH&Q.

Recommended Corrective actions

Recommend assignment to F Beranek as a PER/RES.

Originator Contact

No

Originators Name	Originators ID	Originators Phone	Date Initiated
Flasch, Michael P	H5610828	(509) 373-4473	03/27/2009

SHIFT OPERATIONS REVIEW

Title

Independent Assessment of Subcontract Management and Oversight - Finding SO-F2

How Discovered	Agency
self-ID prior to event	

Reportability	SSC Operability	Operability Review	Comp Measures Req
Non-Reportable	N/A	N/A	

Describe actions Taken or Recommended

No additional actions taken or recommended by BO SSM

SO Reviewer Name	SO Reviewer ID	SO Reviewer Phone	SO Review Date
Malhan, Rakesh	H0046812	(509) 373-2689	03/27/2009

SCREENING

PER Significance Level			
PER with Resolution			
Independent Assessment Review	**Occurrence Report Number**	**Externally Identified**	
Yes		No	
Assigned			

Responsible Manager	Facilities Rep / SSO	Safety Management Rep	
Beranek, Fred			
Program		**Safety Management Program**	
• N/A		• ^N/A^	
PER Screening Comments			
PER w/ Res with informal Apparent Cause Analysis (Nancy Brown 03/30/09)			
Causal Code			
A5B3C01	Communications LTA Written Communication Not Used Lack of written communication		
MGT/Comm/Train	**Human Performance**	**GEMS**	**Equip/Eng/Other**
Failed Barrier	**ORPS Code**	**Functional Area**	**Work Process**
	Not Applicable	Contract Management/Supplier Oversight	• Assessments • Subcontractor Oversight
ISMS	**Consequence Code**		
Perform work within the controls	• Communications - Inadequate communications, roles, responsibilities • Resource Allocation, Organizational Structure - Inadequate staffing/Organizational structure not defined		
PER Screening Chair	**PER Screening Chair ID**	**PER Screening Chair Phone**	**PER Screening Date**
Brown, Nancy L	H0088797	(509) 373-0992	03/30/2009
PAAA REVIEW			
PAAA Screening	**PAAA Codes**	**Function Codes**	
PAAA, Non-NTS Reportable	• 10 CFR 830.122 (g)(3) • 10 CFR 830.122 (i) • 10 CFR 830.122 (j)(1)	• Inspection • Performance Assessment (including walk downs)	
NTS Report Number	**NTS Report Date**		
Repetitive / Recurrent	**Programmatic**	**Intentional Violation / Misrepresentation**	
No	No	No	
PAAA Screening Comments			
PAAA Reviewer Name	**PAAA Review Date**		
Anderson, Craig E	04/01/2009		
PAAA Approver Name	**PAAA Approve Date**		
Anderson, Craig E	04/01/2009		
CAUSE ANALYSIS			
Description of Occurrence			
Finding SO-F2 Assessment activities have not been performed over the past several years to ensure that implementation of the subcontractor management and oversight process is achieving its desired objective. Core Function 5 (Provide Feedback and Continuous Improvement) of Integrated Safety Management as described in RPP-MP-003, Integrated Environment, Safety, and Health Management System Description for the Tank Farm Operations Contractor, establishes expectations for feedback and continuous process improvement.			
Extent of Condition			

Various assessment activities in ES&H
Safety Significance
No safety significance
Generic Implications
Remedial Corrective Action
Notified the Manager to include the Subcontractor Management Oversight assessment to the schedule.
Causal Analysis, Apparent Cause and/or Root Cause Analysis
Inadequate written communication resulting from inadequate staffing and allocation of resources caused the Subcontractor Management Oversight assessment to be omitted from scheduling.

CORRECTIVE ACTIONS

Actionee	Action Due Date	E-STARS Number
Shugars, David L	08/03/2009	

Action
Include the Subcontractor Management Oversight assessment on the Performance Assurance annual assessment tickler.
Corrective Action Attachments

ATTACHMENTS

Link to PER
RE_ WRPS-PER-2009-0473 Extension Request.msg
Subcontractor Mgt Oversight IA Report.pdf

AUDIT HISTORY

Change Date	Auditor	Comments
03/30/2009 08:19	Owen, Annette	'Source Document Number Available' was changed.
03/31/2009 08:20	Brown, Nancy L	Responsible Manager Task Launched by Brown, Nancy L
04/01/2009 11:26	Anderson, Craig E	PAAA Codes Changed
05/06/2009 13:42	Brown, Nancy L	'SMP Owner' was changed.
05/06/2009 14:05	Glaman, Linda R	'Screening Safety Managemnt Program' was removed - SMP incorrectly identified. L Glaman at the request of M Silvia

-- End of Report --
08/06/2009 05:34 PM

Task# WRPS-PER-2009-0473

E-STARS[R] Report
Task Detail Report
08/06/2009 1744

TASK INFORMATION			
Task#	WRPS-PER-2009-0473		
Subject	RES; Independent Assessment of Subcontract Management and Oversight - Finding SO-F2		
Parent Task#		**Status**	Open
Reference		**Due**	06/23/2009
Originator	^PER Coordinator	**Priority**	Medium
Originator Phone		**Category**	PER
Origination Date	03/27/2009 1048	**Generic1**	None
Remote Task#		**Generic2**	None
Deliverable	PER Review	**Generic3**	None
Class	None	**View Permissions**	Global
Instructions	*No Instructions*		

ROUTING LISTS

1	Responsible Manager	Active
	Review the PER Screening Tab and Senior Manager Review for requested data. Complete the task in E-STARS in accordance with TFC-ESHQ-Q_C-C-01, and TFC-ESHQ-Q_ADM-C-12 Apparent Cause Analysis & Corrective Action Planning.	
	• Beranek, Fred - Assign - Completed with comments - 06/11/2009 1338 *Instructions:*	
	• ^Independent Assessment Review(Brown, Robert L) - Review - Concur with comments - 07/01/2009 1141 *Instructions:* Independent Assessor Review	
	• Van Meighem, Jeff S - Review - Withdrawn - 05/06/2009 1342 *Instructions:* Safety Management Representative Review	
2	Review Initial PER	Inactive
	Review New PER	
	• ^SO(Malhan, Rakesh) - Review - Concur - 03/27/2009 1539 *Instructions:*	
	• ^PER Screening(Brown, Nancy L) - Review - Concur - 03/30/2009 1359 *Instructions:*	
	• ^Mgr Review - Review - Cancelled - 03/31/2009 0820 *Instructions:*	

ATTACHMENTS

Attachments	1. Link to PER 2. RE_ WRPS-PER-2009-0473 Extension Request.msg 3. Subcontractor Mgt Oversight IA Report.pdf

COMMENTS

Poster	^PER Coordinator (Glaman, Linda R) - 05/07/2009 1303
	1st Extension to 6-15-09 per attached email report. LBG 5-9-09
	The Manager is working the PERs however more time is need to ensure proper assignments and completion of requirements. Further extensions will be based on progress on the

Task# WRPS-PER-2009-0473

	assignment of PER to responsible party for actions, completion of the cause analysis, and development of corrective actions by 06/15/2009. T Bowman for F Beranek 5-9-09 The extension is approved please include comment.M Silvia for C Maciuca 5-9-09		
Poster	Beranek, Fred (Bowman, Tami A) - 06/11/2009 1338		
	Completed		
	Corrective action ready for launch. Beranek/Bowman 06/11/2009		
Poster	^Independent Assessment Review (Brown, Robert L) - 07/01/2009 1141		
	Concur		
	Concur with corrective actions.		
TASK DUE DATE HISTORY			
Modified	05/07/2009 1302 - ^PER Coordinator (Glaman, Linda R)	**New Due Date**	06/23/2009 1630
Modified	03/31/2009 0820 - ^PER Coordinator	**New Due Date**	05/19/2009 1630
Modified	03/31/2009 0820 - ^PER Coordinator	**New Due Date**	05/11/2009 1630
Modified	03/27/2009 1048 - ^PER Coordinator	**New Due Date**	03/29/2009 1630
SUB TASK HISTORY			
No Subtasks			

-- end of report --

Message

From: Silvia, Michael J (Mike)
Sent: Thursday, May 07, 2009 11:32 AM
To: ^WRPS Corrective Action Group; Maciuca, Constantin
Cc: Bowman, Tamara; Beranek, Fred
Subject: RE: WRPS-PER-2009-0473 Extension Request

The Manager is working the PERs however more time is need to ensure proper assignments and completion of requirements. Further extensions will be based on progress on the assignment of PER to responsible party for actions, completion of the cause analysis, and development of corrective actions by 06/15/2009.

The extension is approved please include comment.

Mike

From: ^WRPS Corrective Action Group
Sent: Thursday, May 07, 2009 10:26 AM
To: Silvia, Michael J (Mike); Maciuca, Constantin
Subject: FW: PER Extensions
Importance: High

The following PER with Resolution extension requests have been received, see message below...

WRPS-PER-2009-0472: 1st extension; currently due 5-11; no resolution information.
WRPS-PER-2009-0473: 1st extension; currently due 5-11; no resolution information.
WRPS-PER-2009-0474: 1st extension; currently due 5-11; no resolution information.
WRPS-PER-2009-0476: 1st extension; currently due 5-11; no resolution information.
WRPS-PER-2009-0477: 1st extension; currently due 5-11; no resolution information.

Thanks...As always, please call if you have questions

Linda RB Glaman
Operations Support Specialist/CAM
376-1776/376-6249
2750E/A-208/R2-87

"The only stupid question is the one that remains unasked"

From: Bowman, Tamara
Sent: Thursday, May 07, 2009 8:57 AM
To: ^WRPS Corrective Action Group
Cc: Beranek, Fred
Subject: PER Extensions

Please extend the following PERs:

WRPS-PER-2009-0472, 0473, 0474, 0476, and 0477

PER w/Res

RM Fred Beranek

Curr Due 05/11/2009

Extend 06/15/2009

Additional time is needed to complete actions required for resolution.

Thank you.

Tami Bowman

"Safety - Our Way of Life"
W- 509-372-0031
C- 509-438-5268
Fax- 509-373-2715

Washington River Protection Solutions LLC
Independent Assessment
of
Subcontract Management and Oversight

February 23 to March 10, 2009

Final Report Rev. 0
FY2009-WRPS-I-0002

washington **river**
protection solutions

Approved: _____
M. J. Silvia,
Team Lead

Team Members:

R. L. Brown	3-30-09 Date
M. P. Flasch	03/30/09 Date
L. R. Penick	3/30/09 Date

TABLE of CONTENTS

1.0 INTRODUCTION 1
2.0 PURPOSE AND SCOPE 1
3.0 EXECUTIVE SUMMARY 2
4.0 ASSESSMENT RESULTS 7
4.1 Functional Area: Interface Management 7
4.2 Functional Area: Subcontractor Management and Oversight / Objective #1 9
4.3 Functional Area: Subcontractor Management and Oversight / Objective #2 15
4.4 Functional Area: Subcontractor Management and Oversight / Objective #3 17
4.5 Functional Area: Document Control 23
4.6 Functional Area: Records Management 27

ATTACHMENTS

ATTACHMENT A - PERSONNEL CONTACTED 29
ATTACHMENT B - DOCUMENTS REVIEWED 32

ACRONYMS

AIA	Administrative Interface Agreement
BMA	Blanket Master Agreement
BTR	Buyer's Technical Representative
DOE	Department of Energy
EJTA	Employee Job and Task Analysis
ESH&Q	Environmental, Safety, Health, and Quality
ESRB	Executive Safety Review Board
ESL	Evaluated Suppliers List
FY	Fiscal Year
ICWEA	Intercompany Work Exchange Agreements
ISMS	Integrated Safety Management System
MOP	Management Observation Program
MOU	Memorandum of Agreement
PAAA	Price Anderson Amendment Act
PER	Problem Evaluation Request
POC	Point of Contact
QA	Quality Assurance
ROS	Request for On-site Services
RTK	Right to Know
SME	Subject Matter Expert
SOW	Statement of Work
TOC	Tank Operations Contractor
WRPS	Washington River Protection Solutions
WSHP	Worker Safety and Health Plan

1.0 INTRODUCTION

The Washington River Protection Solutions LLC *Quality Assurance Program Description*, TFC-PLN-02, requires that independent assessments be conducted to evaluate the performance of work processes with regard to requirements, customer expectations, and efforts to achieve the mission and goals of the organization. From February 23, 2009 through March 10, 2009, an independent assessment was conducted of the Washington River Protection Solutions management systems that implement the subcontract management and oversight processes. The assessment was led by Mr. Michael J. Silvia, with support from Performance Assurance personnel Robert L. Brown, Michael P. Flasch, and Lee R. Penick. This report documents the assessment details and results of the areas evaluated.

2.0 PURPOSE AND SCOPE

The purpose of this independent assessment was to evaluate the effectiveness of implementation of processes that support subcontract management and oversight. Assessment scope was as follows:

- Interface Management
  - Interfaces are effectively identified, documented, communicated and implemented with other Hanford Site Prime Contractors, as well as with other external contractors and companies.
- Subcontract Management and Oversight
  - Subcontract management and oversight activities are performed by knowledgeable WRPS personnel in accordance with well-defined and documented process expectations.
  - Subcontract management and oversight activities are supported by effective flow-down of requirements to the subcontractors.
  - Subcontract management and oversight activities are supported by periodic interface with responsible subcontractor personnel, including observations of in-progress field work, corrective action management, records management, and notification and reporting.
  - The WRPS Quality Assurance program is employed effectively to support subcontract management and oversight activities.

This assessment was performed in accordance with Washington River Protection Solutions procedure TFC-ESHQ-AP-C-02, *Independent Assessments*.

3.0 EXECUTIVE SUMMARY

The Independent Assessment of subcontract management and oversight was conducted February 23, 2009 through March 10, 2009. Though personnel resources and procedural direction are in place to provide Environment, Safety, Health and & Quality oversight of subcontracts, the subcontract oversight process needs significant improvement in both program content and implementation. The assessment team concluded the following:

a. The mission and organizational structure that supports interface management to ensure identification, documentation, and communication was found to be adequate and effective at present time.
b. Functional leadership for, and knowledge of, personnel performing the subcontractor oversight function, and effective implementation of the subcontractor oversight expectations, are less than adequate.
c. Flow-down of requirements to the subcontractors was found to be adequate and effective.
d. Implementation of periodic interface with responsible subcontractor personnel, including observations of in-progress field work, corrective action management, records management, and notification and reporting was found to be less than adequate.
e. Document control and records management practices were determined to generally be adequate, the exception being maintenance of subcontractor oversight screening documentation as quality records. Several improvement opportunities were identified to increase process efficiency and effectiveness.

This assessment resulted in six findings and sixteen observations, as follows; the details for each are provided in the body of the report.

Findings:

SO-F1 Programmatic ownership and responsibility for success of the subcontract oversight function have not been established. Guiding Principle 1 of RPP-MP-003, *Integrated Environment, Safety, and Health Management System Description for the Tank Farm Operations Contractor*, establishes expectations for processes to provide clear roles and responsibilities. **(WRPS-PER-2009-0472)**

SO-F2 Assessment activities have not been performed over the past several years to ensure that implementation of the subcontractor management and oversight process is achieving its desired objective. Core Function 5 (Provide Feedback and Continuous Improvement) of Integrated Safety Management as described in RPP-MP-003, *Integrated Environment, Safety, and Health Management System Description for the Tank Farm Operations Contractor*, establishes expectations for feedback and continuous process improvement. **(WRPS-PER-2009-0473)**

SO-F3 Subcontractor Oversight Plan (screening) forms (Form A-6003-991) have not been developed, or have been completed incorrectly, for many subcontracts as required in TFC-ESHQ-S_SAF-C-07, *Subcontractor Oversight*. **(WRPS-PER-2009-0474)**

SO-F4 Subcontractor oversight activities are not performed by the Environmental Programs organization as required by RPP-MP-003, *Integrated Environment, Safety, and Health Management System Description for the Tank Operations Contractor*, and TFC-ESHQ-S_SAF-C-07, *Subcontractor Oversight*. **(WRPS-PER-2009-0475)**

SO-F5 Buyer Technical Representatives and Contract Requestors have incorrectly determined in several instances that Subject Matter Expert (SME) approval of relevant Statements of Work (SOW) was not necessary. For example, approval by the Radiological Control organization was not identified for several inspection field work activities to be performed within Tank Farms. Contributing to this issue was incorrect determination by the Buyer Technical Representatives and Contract Requestors as to the need for some of the SMEs to approve the SOWs. This is identified as ineffective implementation of step 4.3.19 (Creating and Approving the Statement of Work) of TFC-BSM-CP_CPR-C-05, *Procurement of Services*, to determine the required SOW approvals. **(WRPS-PER-2009-0476)**

SO-F6 Record retention requirements for Subcontractor Oversight Plan (screening) forms and scheduling requirements for subcontractor oversight activities are not implemented as described in TFC-ESHQ-S_SAF-C-07, *Subcontractor Oversight*. **(WRPS-PER-2009-0477)**

Observations:

SO-O1 As an area for improvement, development and implementation of a qualification card process, would assist in ensuring that personnel assigned to perform the Buyer Technical Representative function possess the requisite training and experience to perform the function effectively. **(WRPS-PER-2009-0478)**

SO-O2 As an area for improvement, development, staffing and implementation of a limited size core group of personnel to perform all Buyer Technical Representative (BTR) functions has potential to increase both efficiency and effectiveness of the BTR role. **(WRPS-PER-2009-0479)**

SO-O3 Training and awareness of Buyer Technical Representatives regarding their functional roles and responsibilities for subcontractor oversight are less than adequate. **(WRPS-PER-2009-0480)**

SO-O4 Personnel performing Buyer Technical Representative (BTR) responsibilities achieve authorization to perform the function, and are listed on the Procurement web site; however, there is no requirement to receive re-authorization if personnel have not recently performed BTR responsibilities. **(WRPS-PER-2009-0481)**

SO-O5 The *Training Implementation Matrix per DOE Order 5480.20A* dated September 2005 needs to be revised to reflect the correct 'Compliance Reference' for 'Subcontractor Personnel Qualification'. Specifically, Table 2 (General Requirements Matrix), Chapter 1 (General Requirements), Section 3 (Subcontractor Personnel Qualification) references the compliance reference document as TFC-BSM-CP_CPR-C-03, *Buyer's Technical Representative Process*; however, this procedure was cancelled in April 2007, with the key elements incorporated into TFC-BSM-CP_CPR-C-05, *Procurement of Services*. **(WRPS-PER-2009-0482)**

SO-O6 A comprehensive assessment of the integration, procedural direction, and implementation of the WRPS procurement processes has not been performed since calendar year 2002. **(WRPS-PER-2009-0483)**

SO-O7 Subcontractor oversight plan documentation was observed indicating that planned oversight would consist of routine functional area surveillance activities already in place, with no specificity as to the relevant contract/release. Consequently, there is no assurance that the planned oversight activities would consider elements of the contract/release that may require oversight scope of a specialized nature, nor is there assurance that the specific subcontracts received necessary oversight. **(WRPS-PER-2009-0484)**

SO-O8 Observation indicated the ATCO shop is presently in use by construction subcontractors, but there is no evidence of a "Formal Turnover" of the facility from WRPS to the subcontractor in accordance with the provisions of the Statement of Work (reference Contract Requisition 00180390, *241-C-110 Waste Retrieval Systems Installation*). **(WRPS-PER-2009-0485)**

SO-O9 As an area for improvement, actions to screen subcontracts to determine the need for subcontractor oversight and to develop subcontractor oversight plans per TFC-ESHQ-S_SAF-C-07, *Subcontractor Oversight*, should be performed as subcontract pre-award activities rather than as post-award activities. Also, there is no timeframe specified to complete the subcontract oversight screening activity or to develop subcontract oversight plans. **(WRPS-PER-2009-0486)**

SO-O10 *Evaluation of Subcontractor Performance* evaluations are not performed for some subcontracts that roll over year-to-year.
(WRPS-PER-2009-0487)

SO-O11 Several areas of improvement were identified for the Subcontractor Oversight Form (Form A-6003-991) to strengthen the determination process for subcontractor oversight. For example:

a. Approval documentation for functional area managers responsible for subcontract oversight activities needs to be strengthened.
b. Subcontract activities involving field work do not receive particular emphasis for oversight activity.

(WRPS-PER-2009-0488)

SO-O12 TFC-ESHQ-S_SAF-C-07, *Subcontractor Oversight* does not provide recommended subcontractor oversight frequency or depth of review.
(WRPS-PER-2009-0489)

SO-O13 Procedures that support the subcontractor oversight function provide several instances of conflicting direction. In particular, the following procedures are not well integrated to ensure that Buyer Technical Representatives, ESH&Q managers, and Contract Requestors can perform their roles and responsibilities effectively and efficiently:

a. TFC-ESHQ-S_SAF-C-07, *Subcontractor Oversight*
b. TFC-BSM-CP_CPR-C-05, *Procurement of Services*
c. TFC-BSM_CP_CPR-P-05, *Subcontract Closeout*

(WRPS-PER-2009-0490)

SO-O14 TFC-BSM-CP_CPR-C-05, *Procurement of Services* is unclear as to whether the following documents identified in the procedure are to be treated as record material:

a. Determination of Required Approval (DRA) forms
b. Workplace Substance Abuse Program (WSAP) form

(WRPS-PER-2009-0491)

SO-O15 TFC-ESHQ-ENV_AP-D-01, *Environmental Oversight of Subcontractors*, was cancelled in June 2006; however, the document is still listed as a company level guidance document in TFC-PLN-73, *Environmental Protection and Compliance Plan*, and should be replaced with TFC-ESHQ-S_SAF-C-07, *Subcontractor Oversight*.
(WRPS-PER-2009-0492)

SO-O16 Passport is not recognized as a document 'record' database. TFC-BSM-IRM_DC-C-02, *Records Management*, recognizes documents maintained as records in approved TFC Records Storage Areas, Document Service Centers, Records Holding Areas, or electronically stored in the Integrated Document Management System, but is silent on the 'record' determination for the Passport database. **(WRPS-PER-2009-0493)**

4.0 ASSESSMENT RESULTS

The purpose and scope of the assessment were presented at the entrance meeting conducted on February 23, 2009. During the performance of the assessment, periodic assessment team meetings were held to apprise responsible personnel of assessment issues and overall progress. Final assessment results were presented at an exit meeting on March 10, 2009.

The approach used during the assessment consisted of interviews and document reviews, with limited field observation due to the nature of the assessment. Attachment A provides a listing of personnel contacted during the assessment; Attachment B provides a listing of documents reviewed in support of the assessment.

4.1 Functional Area: Interface Management

Objective:

Interfaces are effectively identified, documented, communicated and implemented with other Hanford Site Prime Contractors, as well as with other external contractors and companies.

Criteria/Requirements:

1. Formal intercompany work exchange agreements (ICWEA) are in place between Washington River Protection Solutions LLC (WRPS) and affiliate companies to perform work without fee.
2. Work performed under ICWEAs is approved and authorized.
3. Memorandum of Agreement documents are in place to describe the business management agreements between WRPS and other contractors for the performance and payment of services.
4. Interface agreements are in place, as necessary, to support formal commitments with other Hanford Site Prime Contractors. (Physical system interfaces are controlled via an Interface Control Document, while administrative interfaces are controlled via an Administrative Interface Agreement.)
5. Statements of Work are applied, as necessary, to define the scope, safety, quality, and technical requirements for services that are provided for a discrete transfer of funds.
6. The WRPS assessment program is implemented to monitor the effectiveness of the interface management processes and implementation of safety, environmental, radiological, and quality requirements stated in interface documents.

RESULTS

Conclusion Statement:

The mission and organizational structure that supports interface management to ensure identification, documentation, and communication was found to be adequate and effective at present time. A management assessment is scheduled to review the status of interface documents and validate previous gap analysis to ensure contractual commitments and interfaces are being addressed. There are no Findings or Observations for this objective.

Discussion:

Project Integration consists of five organizations with each having a unique function and responsibility. New to tank farms under the prime contract is Interface Management. The function of this organization is to develop documents that assist with the integration of Hanford Site requirements either shared or provided by new and existing prime contractors under the Department of Energy offices.

Intercompany work exchange agreements (ICWEA) are a subset of the documents that are used to describe services and material request between affiliates, prime contractors, and subcontractors performing work for Washington River Protection Solutions LLC (WRPS). Interface Management will manage the program that communicates, establishes policy and assist in the development of documents for prime contract interfaces points established by each of the respective prime contracts. These documents consist of Memorandum of Agreements (MOA), Interface Control Documents (ICDs), and Administrative Interface Agreements (AIA), while ICWEA documents (blanket master agreement (BMA), request for on-site services (ROS), statement of work (SOW), etc) are controlled and issued by the Procurement Services and Prime Contract.

The processes established under company policies, plans, and procedures require approvals and authorization of ICWEA prior to work commencing. TFC-PLN-102, *TOC Interface Management Plan* outlines the requirements in the Contract related to the Interface Management function and defines the execution/portfolio management strategy the TOC will apply to meet these requirements and support the line management projects. The implementing document for interface management is TFC-BSM-CP_CPR-C-17, *Interface Management.* Interface Management has recently completed the development and updates of prime contract MOAs. The process of developing other interface management documentation to implement formal commitment related to the cooperative transfer of material, energy, or data across company boundaries is on going and tracked by Interface Management.

The Interface Management plan and procedure outline the basic roles, responsibilities and process for the program and development of required documentation. As the program and process progress over the next six to twelve months, focus on areas such as program ownership, field implementation responsibilities, and contractor oversight will need to be

integrated. The roles listed in the plan for interface owner and associated point of contact (POC) will need to flow-down to the procedure level and may need expanding. Assessments, meetings, and issue tracking and resolution will provide feedback on where improvements could be needed in the future.

4.2 Functional Area: Subcontractor Management and Oversight / Objective #1

Objective:

Subcontract management and oversight activities are performed by knowledgeable WRPS personnel in accordance with well-defined and documented process expectations.

Criteria/Requirements:

1. Buyer Technical Representatives (BTRs) and Contract Requestors understand their subcontractor oversight roles and responsibilities, as follows:

    a. BTRs have completed the necessary training and qualification.
    b. BTRs provide technical direction/clarification to the subcontractor to ensure performance of all elements in accordance with the statement of work without placing emphasis on schedule or cost to the detriment of quality, safety, or the environment.
    c. BTRs provide internal coordination of, and interface with, the subcontractor regarding various technical requirements, such as the following:

        i. quality assurance
        ii. safety, health
        iii. Security and Emergency Services
        iv. protective forces
        v. environmental
        vi. Price-Anderson Amendments Act, and
        vii. ISMS principles applicable to the performance of the Contract pursuant to Tank Operations Contract implementing procedures.

2. For subcontracts, BTRs and Contract Requestors ensure subcontract personnel have training and qualifications commensurate with the responsibilities.
3. Roles and responsibility for personnel managing and performing the subcontractor oversight function are clearly established and are implemented effectively.

RESULTS

Conclusion Statement:

Functional leadership for, and knowledge of, personnel performing the subcontractor oversight function, and effective implementation of the subcontractor oversight expectations, are less than adequate. There are two Findings and six Observations for this objective.

Discussion:

Programmatic ownership and responsibility for success of the subcontract oversight function have not been established. Guiding Principle 1 of RPP-MP-003, *Integrated Environment, Safety, and Health Management System Description for the Tank Farm Operations Contractor*, establishes expectations for processes to provide clear roles and responsibilities. TFC-BSM-CP_CPR-C-05, *Procurement of Services* and TFC-ESHQ-S_SAF-C-07, *Subcontractor Oversight*, provide applicable roles and responsibilities for the tasks applicable to the procurement process and subcontractor management and oversight; however, the functional area managers for these procedures acknowledge only their specific functional roles and responsibilities in the overall process. This issue is identified as **Finding SO-F1**. In particular:

a. ISMS Guiding Principle 1 mandates that clear and unambiguous lines of authority and responsibility are established and maintained at all organizational levels. Though the relevant ESH&Q functional area managers confirmed ownership responsibility for their respective functional areas, an individual to serve as the collective management sponsor is not evident.
b. Though the Manager – Industrial Safety is the Functional Area Manager for the subcontract oversight procedure (TFC-ESHQ-S_SAF-C-07, *Subcontractor Oversight*) and the Manager – Procurement Services is responsible for the Buyer Technical Representative function to coordinate the development and implementation of subcontractor oversight plans, neither individual feels that they own or are responsible for success of the subcontractor oversight function.
c. 'Functional area manager' and 'document owner' responsibilities for the above procedure transitioned from the Quality Assurance organization to the Industrial Safety organization with revision B-4 in February 2008. An expectation that process ownership accompany the transfer of procedure ownership was not considered in the transition.
d. Though functional area manager responsibility for the above procedure has recently transitioned, the Manager – Quality Assurance Services remains responsible for the Subcontract Oversight form (Form A-6003-991).
e. PER 09-0166, issued January 27, 2009, discussed knowledge deficiencies encountered with several BTRs regarding the expectations for and implementation of subcontract oversight plans. This PER was categorized as PER/RES, and assigned to the Manager – Procurement Services.

Assessment activities have not been performed over the past several years to ensure that implementation of the subcontractor management and oversight process is achieving its desired objective. Core Function 5 (Provide Feedback and Continuous Improvement) of Integrated Safety Management as described in RPP-MP-003, *Integrated Environment, Safety, and Health Management System Description for the Tank Farm Operations Contractor*, establishes expectations for feedback and continuous process improvement. This issue is identified as **Finding SO-F2**. Contributing factors are as follows:

a. Comprehensive assessments of the subcontractor management and oversight process have not been performed in approximately nine years. Assessment activities have focused on identification and resolution of subcontract management and oversight issues in specific organizational areas, without performance of process assessments to identify and resolve the underlying issues.

    1. A series of subcontract management effectiveness assessments were performed in FY2002, but only one has been performed since (ref. FY-2007-SHQ-M-0135, *Subcontractor Oversight Process*, dated March 26, 2007, performed by the Quality Assurance organization). The one assessment report indicated an assessment of shallow scope and depth of the subcontractor oversight process.
    2. An independent Assessment of '*CH2M HILL Corporate Independent Assessment of CHG Hanford Tank Farm Activities* performed in December 2005 identified "There is no articulated strategy to describe how we approach subcontractor activity in the independent assessment program. ... This issue is relevant because of the heightened expectations from the DOE with respect to our responsibility for ensuring adequate performance of our subcontractors." This issue was supported by a recommendation that "The ESRB should determine if the company strategy to ensure adequate subcontractor oversight is adequately articulated and sufficiently comprehensive" (reference PER 06-0084). The closure documentation for this PER did not provide evidence that the recommendation was considered for action by the ESRB.
    3. An Independent Assessment of 'Procurement to Include Subcontractor Oversight' was planned for FY 2006, but was subsequently cancelled. This assessment was initially planned, in part, in response to PER 06-0084 (January 2006) recommending "The ESRB should determine if the company strategy to ensure adequate subcontractor oversight is adequately articulated and sufficiently comprehensive." Insufficient follow-through of this issue indicates a missed opportunity to preclude the current adverse trend.
    4. There are no further assessments planned in the subcontract management and oversight effectiveness topical area in FY2009.
    5. At the time of the assessment, there are no personnel in the Quality Assurance, Safety or Procurement line management teams qualified to lead Management or Specialty Assessment activities, via completion of Course # 350319, *Management Assessment Team Leader Qualification* or

Course # 357319, *Assessment Team Leader Requalification*. Though the Manager – Quality Services was previously qualified to lead assessment teams, the qualification expired on February 12, 2009. It is recognized that another member (non-management) of the Quality Services organization is presently qualified to lead assessment teams.

6. RPP-8411, *Washington River Protection Solutions Procurement Process Description* (co-approved by ORP) states "... ensure that every product or service purchased meets all necessary technical standards and requirements"; however, monitoring and evaluation of the procurement process are not implemented via implementation of self-assessment processes as discussed in the document to promote continuous improvement (reference sections 2.3, *Oversight and Compliance: Self-Assessment*, and 4.7, *Continuous Process Improvement*). In particular, expectations of section 5.6.1, *Managing Subcontractor Performance* to facilitate exemplary subcontract performance through monitoring of subcontractors to ensure ESH&Q program compliance are infrequently performed.
7. MOPs are not performed of the Subcontractor Oversight function as described in TFC-ESHQ-S_SAF-P-06, *Safety Assessments*. Attachment A (Safety and Health Program Functional Elements and Minimum Assessment Periodicity) identifies Subcontractor Oversight as a topic to be considered in development of the annual safety program assessments and MOP topics; however, review of MOP records in IDMS indicates there have been only two MOPs performed in this area over the past four years. The annual (fiscal year) schedule for Safety and Health program MOPS on topics in Attachment A, such as Subcontractor Oversight, has not been developed for FY2009 as described in Step 4.1 of the procedure. The issue of not scheduling safety MOPs to cover Subcontractor Oversight and other S&H areas is similar to the issue described in PER 08-0252.

b. Several Problem Evaluation Requests (approximately ten PERs) have identified ineffective implementation of subcontractor oversight plans, as identified during Management and Specialty Assessments. However, the corrective action plans associated with the relevant PERs have focused on the functional area responsible for the specific subcontract management and oversight plans, without communication to the process owners (e.g., presently, the Industrial Safety organization). Consequently, emergence of an adverse performance trend has not been identified of the subcontractor oversight process to enable focus on process implementation deficiencies.

c. Discussion with a Safety SME indicated they spend much more time reviewing documents in the office, (submittals, work packages, etc.) than performing field surveillances. The SME stated that not all time spent in the field is necessarily documented as a surveillance. Also, discussions with two SME's indicate they expect the BTR to bring a subcontractor oversight plan screening form to them to be signed or request it be developed, but they don't expect to have to initiate the

oversight screening form themselves. One interviewed SME, specifically asked if he was familiar with the new release of the Subcontractor Oversight procedure dated February 11, 2009 and his responsibility to develop the plan as indicated below, stated that he was not aware.

> 3.2 "Safety & Health, Environmental, Quality Assurance, and Radiological Controls personnel are jointly responsible for coordinating subcontractor oversight activities with the buyer's technical representative (BTR) as specified below. When required, they will develop a Subcontractor Oversight plan and provide it to the BTR and Procurement for transmittal to the Subcontractor."

Presently, for several (approximately 30) subcontracts/releases that apply to in-farm and design/build procurements, the assigned BTR is an administrative individual that does not possess technical knowledge and experience necessary to ensure that elements of the subcontract management and oversight process are implemented effectively. As an area for improvement, development and implementation of a qualification card process, especially of a dual qualification level to differentiate between administrative and technical procurements involving field work, would assist in ensuring that personnel assigned to perform the BTR function possess the requisite training and experience to perform the function effectively. This issue is identified as **Observation SO-O1**.

Personnel that perform the BTR function, when interviewed, stated that implementation of the BTR responsibilities frequently impose upon their normal position duties, and BTR responsibilities are not receiving an appropriate level of commitment. Consequently, decisions are made that result in less than adequate attention to BTR responsibilities. Presently, 36 personnel who are embedded in the line organizations perform the BTR function as a collateral duty. Administrative personnel performing the associated BTR functions appear motivated and interested in success of the subcontract management and oversight process, but sometimes do not recognize or provide challenge when process elements are not implemented in an effective manner (such as responsible functional area managers incorrectly concluding that oversight of field work was not needed). Interview results also indicated that the process knowledge and time commitment necessary to effectively perform BTR responsibilities are not receiving an appropriate level of commitment by most BTRs. As an area for improvement, development, staffing and implementation of a limited size core group of personnel to perform all BTR functions has potential to increase both efficiency and effectiveness of the BTR role. This issue is identified as **Observation SO-O2**.

The method and depth of training provided to BTRs is less than adequate to ensure that BTRs are fully trained to assume the functional roles and responsibilities. BTRs frequently cited a desire for additional training. Document reviews and interviews conducted determined training and awareness of Buyer Technical Representatives regarding their functional roles and responsibilities for subcontractor oversight are less than adequate. This issue is identified as **Observation SO-O3**. For example:

a. Several BTRs stated that they were not aware of the BTR role in subcontractor oversight. Previous assessments found additional examples of BTRs stating that they had no knowledge of TFC-ESHQ-S_SAF-C-07, *Subcontractor Oversight* or the use of Form A-6003-991 (Subcontractor Oversight Plan) to determine the need for oversight of subcontractors.
b. Contributing to this knowledge weakness is discontinuation of a continuing training activity for BTRs that was removed in February 2008. Consequently, personnel performing BTR responsibilities are not provided with continuing training opportunities to maintain proficiency as BTRs.
c. Recent revisions to TFC-BSM-CP_CPR-C-05 that impacted BTR roles specified "Training will be provided to BTRs in their quarterly update"; however, as noted above, quarterly updates have not been provided since 2008.
d. When interviewed, presently active BTRs stated that they would welcome the concept of continuing training. Course #350246, *Buyer Technical Representative Upgrade Class* is the training provided to authorized BTRs; 130 current WRPS personnel have completed Course #350246, *Buyer Technical Representative Upgrade Class* since calendar year 2001, of which 72 are authorized to perform BTR responsibilities, of which 36 are actively performing BTR responsibilities.
e. The procedure for subcontractor oversight provides no delineation between the types of subcontracts (e.g., administrative procurement activities, rather than procurement activities involving field work, though staff augmentation procurements are excluded) and provides no guidance for determining or developing the level or type of subcontractor oversight that might be appropriate for a given type of subcontract, i.e. design, construction, etc. Consequently, BTR knowledge and awareness of subcontractor oversight expectations is entirely dependent upon the BTR's technical knowledge and experience.
f. Increased familiarization with Passport was cited by most BTRs as a desired training activity. In addition, several authorized (but inactive) BTRs are not authorized to access Passport; subsequently, their ability to effectively perform the BTR function is significantly minimized should this support be needed.

Personnel performing Buyer Technical Representative (BTR) responsibilities achieve authorization to perform the function, and are listed on the Procurement web site; however, there is no requirement to receive re-authorization if personnel have not recently performed BTR responsibilities. Consequently, personnel performing BTR responsibilities do not maintain proficiency as BTRs, and are not made aware of changes to BTR processes and expectations or to changes in the procurement process. As an area for improvement, re-authorization of personnel performing BTR responsibilities should be considered (e.g., BTR function authorization removed) if they have not actively performed BTR responsibilities within a specified period of time. This issue is identified as **Observation SO-O4**.

The *Training Implementation Matrix per DOE Order 5480.20A* dated September 2005 needs to be revised to reflect the correct 'Compliance Reference' for 'Subcontractor Personnel Qualification'. Specifically, Table 2 (General Requirements Matrix), Chapter 1 (General Requirements), Section 3 (Subcontractor Personnel Qualification) references the compliance reference document as TFC-BSM-CP_CPR-C-03, *Buyer's Technical Representative Process*; however, this procedure was cancelled in April 2007, with the key elements incorporated into TFC-BSM-CP_CPR-C-05, *Procurement of Services*. Discussion with the Training Manager identified that the need for a revision to the Training Implementation Matrix has been identified and is in progress, including removal of the above reference. This issue is identified as **Observation SO-O5**.

A comprehensive assessment of the integration, procedural direction, and implementation of the WRPS procurement processes has not been performed since calendar year 2002. As an improvement opportunity, performance of an assessment in this area should be considered, to include interface management with the prime contractors and affiliates within the assessment scope. This issue is identified as **Observation SO-O6**.

4.3 Functional Area: Subcontractor Management and Oversight / Objective #2

Objective:

Subcontractor management and oversight activities are supported by effective flow-down of requirements to the subcontractors.

Criteria/Requirements:

1. General site and project-specific safety, health, radiological, environmental, and quality requirements are included in contracts and statements of work, including the following as flowed down through the procurement process to subcontractors:

    a. The Tank Operations Contractor (TOC) Health and Safety Plan (HASP) and the Price Anderson Amendment Act reporting responsibility is applicable to subcontractors who may be involved in tank farm work activities such as design, construction, operation, maintenance, decontamination, decommissioning, and environmental restoration activities.
    b. The medical contractor is responsible for scheduling employees and the employees of contractors, and lower-tier subcontractors for medical qualification examinations and medical monitoring based on the data provided through the EJTA. Results of medical examinations and monitoring are reported to employees, employees of contractors and lower-tier subcontractors, and their respective managers or supervisors. The medical contractor is responsible for maintaining medical records in accordance with the applicable OSHA and DOE requirements.

c. The Chemical Management Plan is relevant to subcontractors involved in the management of hazardous materials.
d. Processes are used to communicate hazardous material information to all personnel who work with hazardous materials during any activity in the tank farms.
e. Construction subcontractors are required to implement the TOC worker safety and health plan (WSHP). The scope, technical complexity, and risk of the construction activity determines the applicable state and federal requirements, as well as the TOC safety procedures, work planning process, and field oversight required.
f. As detailed in HNF-MP-5184 (*Washington River Protection Solutions Radiation Protection Program*) requirements contained in 10 CFR Part 835 are invoked to establish radiation protection standards, limits, and program requirements for protecting individuals from ionizing radiation.
g. The *Washington River Protection Solutions (WRPS) On-Site Work Provisions* elements are invoked, to include the following:

    i. Required Notifications
    ii. Investigation Support
    iii. Reporting and Record Keeping
    iv. Site-wide Qualification and Training
    v. Site Deliveries
    vi. Security
    vii. Medical Evaluations
    viii. Radiation Protection
    ix. Emergency Management
    x. Workplace Substance Abuse Programs
    xi. Whistleblower Protection

2. Subcontractor oversight activities consider reporting of non-compliances to 10CFR851 and PAAA.

RESULTS

Conclusion Statement:

The objective and organizational structure that supports effective flow-down of requirements to the subcontractors was found to be adequate and effective. There are no Findings or Observations for this objective.

Discussion:

TFC-BSM-CP_CPR-C-05, *Procurement of Services*, and TFC-BSM-CP_CPR-C-06, *Procurement of Items (Materials)* ensure that the WRPS contract requirements receive

appropriate flow-down to subcontractors. The responsibility to implement requirements flow down lies with the Buyers Technical Representative (BTR) as described in TFC-BSM_CPR-C-05 which identifies the BTR as responsible to ensure deliverables and requirements are clearly defined. BTRs ensure company policies, procedures, and ISMS flow-down, and Safety, Procurement and Quality Assurance requirements are communicated to subcontractors and incorporated into their work efforts. BTRs are the authorized communication link between WRPS technical staff and the subcontractor to clarify questions, procedures, establish priorities, authorize overtime/accelerate progress and processes. BTRs work in concert with procurement specialists to develop new subcontracts and modify existing subcontracts to reflect changing scope and/or field conditions. Specific applications of this responsibility are contained in Section 4.0.

Document reviews and interviews determined that the flow-down of WRPS applicable contract requirements are usually listed in both blanket master agreements and statements of work for subcontractor activities Several minor examples of ineffective requirements flow-down were noted that were judged to have no significant impact. Several assessors evaluated the BMAs and SOWs developed by different contract requestors and BTRs and found no issues. Examples: Review of construction requisition 182095 and SOW; Requisition 00176418, *C-104 Engineering Design Support* and Contract Requisition 00180390; and *241-C-110 Waste Retrieval Systems Installation*. The TOC HASP and PAAA responsibilities are flowed down to the subcontractor as are requirements for a Chemical Management Plan, On-Site Work Provisions, and applicability to 10 CFR 851.

4.4 Functional Area: Subcontractor Management and Oversight / Objective #3

Objective:

Subcontractor management and oversight activities are supported by periodic interface with responsible subcontractor personnel, including observations of in-progress field work, corrective action management, records management, and notification and reporting.

Criteria/Requirements:

1. Subcontractor Oversight Plans are in place for all activities identified on the Subcontractor Oversight Plan screening forms, with the screening form results located in the Buyer Technical Representative (BTR) files.
2. Subcontractor oversight activities are captured on the integrated assessment schedule or project schedule, as appropriate (e.g., progress meeting participation, Management Observation Program (MOP) conduct, periodic monitoring of performance).
3. Oversight files are maintained for each subcontractor to document oversight activities and responses to any findings and issues.
4. Subcontractor Oversight Plans are maintained as quality records.

5. Subcontractor performance evaluation history files are reviewed by BTRs, as necessary, to ensure that opportunities to bid for work are provided to quality performers.
6. Findings and issues resulting from subcontractor oversight activities receive appropriate corrective actions that prevent recurrence.
7. The WRPS assessment process is applied to evaluate oversight of subcontractor performance, including hands-on work and field implementation of administrative and technical procedures and involve workers, supervisors, and managers.
8. Subcontractor oversight activities consider subcontractor knowledge of 10CFR851 requirements (such as worker rights, posting of worker rights, etc,).
9. Subcontractor oversight activities consider the effectiveness of reporting of non-compliances to 10CFR851 and PAAA.

Results

Conclusion Statement:

The objective and organizational structure that supports implementation of periodic interface with responsible subcontractor personnel, including observations of in-progress field work, corrective action management, records management, and notification and reporting was found to be less than adequate. There are three Findings and six Observations for this objective.

Discussion:

As detailed in this section, several issues were identified relating to implementation of subcontract oversight expectations. Contributing to these issues is inconsistent interpretations as to what constitutes a satisfactory subcontractor oversight plan. For example, interview results revealed the following interpretations:

a.) Completion of section II of the Subcontractor Oversight Plan form (Form A-6003-991, *Subcontractor Oversight Plan*) that identifies necessary oversight activities.
b.) Development of specific subcontractor oversight criteria that are to be implemented to support item a., and
c.) Generation of a detailed subcontractor oversight plan that is scheduled and implemented on a pre-determined frequency.

Subcontractor Oversight Plan (screening) forms (Form A-6003-991) have not been developed, or have been completed incorrectly, for many subcontracts as required in TFC-ESHQ-S_SAF-C-07, *Subcontractor Oversight*. Consequently, BTR coordination actions to ensure that subcontractor oversight coordination activities are defined and implemented are frequently not provided. This issue is identified as **Finding SO-F3**. It is recognized that considerable field oversight is performed, particularly in the industrial

safety area; however, there is no assurance that these oversight activities effectively support subcontract management and oversight. The following examples support the finding:

a. Many subcontracts/releases (15 of 34 based upon a sample by the assessment team) have not been screened to determine whether subcontractor oversight plans are necessary.
b. Subcontract oversight screening activities indicate a need for oversight of field activities for only 36 of 55 subcontracts involving field work (65%, as of February 2009), based upon a sample review by the Safety organization. Consequently, subcontract oversight plans and schedules have frequently not been implemented for subcontracts involving field work activities.
c. Feedback received during the assessment indicated that some personnel responsible for BTR activities incorrectly believed that subcontract activities implemented via the WRPS work control system did not require development of Subcontractor Oversight Plans.
d. In one instance, the 'subcontract oversight' function understanding by the responsible BTR was to review contractor invoices for budget and scope impact, rather than ESH&Q oversight of subcontractor activities.
e. Article 2.0 (Integration of Environment, Safety, Health and Quality (ESH&Q) Into Work Planning and Execution), Item 2.1.11 (General) of the WRPS On-Site Work Provisions states "Open and effective communication shall exist between the SUBCONTRACTOR and the Buyer's Technical Representative (BTR) to support the management of ESH&Q issues and initiatives." Though several BTRs were aware of this clause, they did not interpret the clause to encompass subcontract management and oversight.

Subcontractor oversight activities are not performed by the Environmental Programs organization as required by RPP-MP-003, *Integrated Environment, Safety, and Health Management System Description for the Tank Operations Contractor*, and TFC-ESHQ-S_SAF-C-07, *Subcontractor Oversight*. Consequently, Environmental Compliance personnel do not implement necessary environmental field activities. Current Environmental Surveillance checklists do not identify subcontractor oversight as within scope of Tank Farm facilities. This issue is identified as **Finding SO-F4**.

TFC-BSM-CP_CPR-C-05, *Procurement of Services*, establishes the process for which subcontractor oversight is identified through the development of procurement documents such as the Blanket Master Agreement (BMA) and Statement of Work (SOW). Several Contract Requisitions were noted to not identify subject matter experts (SMEs) in functional areas impacted by the work scope (e.g., Radiological Control, Environmental Programs, and Quality Assurance). TFC-BSM-CP_CPR-C-05, *Procurement of Services*, Section 4.3 Creating and Approving the Statement of Work requires involvement of SME and others, along with Attachment C of the procedure which functions as the tool the BTR can use. Improper approval routing misses the opportunity to ensure proper requirements are flowed down to the subcontractor via the Statement of Work. TFC-BSM-CP_CPR-C-05 provides a useful tool to identify necessary review and approval

SMEs on a 'Determination of Required Approvals' checklist; however, the Buyer Technical Representative and Contract Requestor incorrectly completed the checklist in several instances, resulting in a conclusion that SME approval of relevant Statements of Work was not necessary. This issue is identified as **Finding SO-F5**. Of ten Requisitions reviewed, five with potential ESH&Q impact (e.g., radioactive waste disposal activities, tank farm entries to support inspections) did not contain appropriate approvals. One example of not involving a relevant SME in the Statement of Work approval process (Radiological Control, reference Requisition 00182095) was identified recently in PER 09-0338 (task releases had not yet been issued on this Requisition). The four additional Requisitions are as follows:

Contract Number/ Requisition Number	Contract Scope	Relevant Functional Area SMEs Not Included in SOW Approval
36572 / 00175072	Tank Farm Inspection Services	Radiological Control
28005 / 00178835	ATL Hazardous Waste Treatment/ Disposal	Quality Assurance
28005 / 00178837	Tank Farm Hazardous Waste Treatment/ Disposal	Quality Assurance
36437 / 00176764	PNNL Support for ILAW Glass Testing	Radiological Control Environmental

There is little objective evidence of Environmental, Safety, or Radiological Control oversight being performed either as specific subcontractor oversight or as management observation program (MOP) walk downs or safety surveillances. Interviews with subcontractor staff at the ATCO shop and Vadose Zone project work indicated little presence by environmental, safety or radiological control staff performing oversight activities. A field walk-down of the ATCO shop by the assessment team on February 26, 2009 identified several instances of poor housekeeping. A contributing factor was that requirements for daily safety inspections had not been flowed down to construction subcontracts, though the Construction subcontractor safety professionals do perform safety inspections. When the ATCO shop storage conditions were observed by the assessment team, prompt action was taken by a WRPS safety professional in attendance and action was taken to capture this issue in the corrective action program (reference PER 09-0355). As described in the PER, contributing to the issue was that requirements for daily safety inspections had not been flowed down to construction subcontracts, though the Construction subcontractor safety professionals do perform safety inspections.

Subcontractor oversight expectations are developed and implemented through coordination with the BTR, contract requestor, and SME, and support by ESHQ SMEs to conduct the required oversight. Interviews and document reviews identified several subcontractor oversight plans indicating that planned oversight would consist of routine functional area surveillance activities already in place, with no specificity as to the relevant contract/release. Consequently, there is no assurance that the planned oversight activities would consider elements of the contract/release that may require oversight scope of a specialized nature, nor is there assurance that the specific subcontracts received the planned oversight. This issue is identified as **Observation SO-O7**. Though a considerable amount of field oversight activity is evident, particularly in the industrial safety area, it is virtually impossible to correlate the actual field work activities to specific subcontractor field activities.

Observation indicated the ATCO shop is presently in use by construction subcontractors, but there is no evidence of a "Formal Turnover" of the facility from WRPS to the subcontractor in accordance with the provisions of the Statement of Work (SOW) (reference Contract Requisition 00180390, *241-C-110 Waste Retrieval Systems Installation*). This issue is identified as **Observation SO-O8**. A review of the SOW finds the SOW vague regarding expectations the facilities being turned over to the subcontractors for work. If item 1.1 of the following text of the SOW is in need of revision, the revision should be processed:

Company Facilities

1.1 When the Company provides onsite facilities (i.e., office/administrative, storage, shop facilities and/or lavatory/sanitary facilities) and furnishings (i.e., refrigerators, stoves, microwaves, furniture), the Company will formally turnover the facility(ies) and furnishings to the Contractor.

The WRPS ESH&Q organization is responsible to provide subcontractor management support to the BTR by 1) communicating requirements, and 2) performing assessments, inspections, and/or surveillances to ensure compliance as discussed in TFC-ESHQ-S_SAF-C 07, *Subcontractor Oversight*. Success of the subcontractor oversight process is based upon the BTR, contractor requestor, and SME working together to ensure that subcontractor oversight is performed as needed and is performed effectively. Actions to screen subcontracts to determine the need for subcontractor oversight and to develop subcontractor oversight plans are performed as post-subcontract award activities via completion of the Subcontractor Oversight Screening form (Form A-6003-991). As an area for improvement, completion of the need for subcontractor oversight (via the subcontract oversight screening form completion) should be considered as a pre-award activity. Should the need for a revision to subcontract oversight be identified, particularly the scope and frequency of subcontractor oversight, a revision to the screening determination could be readily accommodated. If the decision is to retain the post-award determination, a time period following award needs to be specific to direct when the oversight screening activity should be completed. This issue is identified as **Observation SO-O9**.

Evaluation of Subcontractor Performance evaluations are not performed for some subcontracts that roll over year-to-year. Three interviewed BTRs with relevant contracts/releases confirmed that they do not complete the *Evaluation of Subcontractor Performance* evaluations at the end of the fiscal year. Since the contracts potentially never end, there is no trigger to perform this closure activity described in step 4.4 (Closure Oversight Activities) of TFC-ESHQ-S_SAF-C-07, *Subcontractor Oversight.* Consequently, evaluation documentation does not exist to support future subcontract choice considerations. Three interviewed BTRs with relevant contracts/releases confirmed that they do not complete the *Evaluation of Subcontractor Performance* evaluations at the end of the fiscal year. As an improvement opportunity, these evaluations should be completed at the Release level, rather than at the Subcontract level, since Releases are issued at least each year. This issue is identified as **Observation SO-O10**.

Several areas of improvement were identified for the Subcontractor Oversight Form (Form A-6003-991) to strengthen the determination process for subcontractor oversight (this issue is identified as **Observation SO-O11**):

a. To maintain process integrity, a suggested improvement opportunity is to implement one or both of the following recommendations:

    i. Require each of these functional area managers to concur with the screening results by signing in Section I (Oversight Plan Screening) of the form.
    ii. Provide concurrence ability in Passport for each of these managers regarding the need for subcontractor oversight plans in their respective functional area.

b. Section I of the Subcontractor Oversight Plan form should be modified to add a 'Yes/No' determination to the question "Does the work activity involve field work?", which should require increased ESH&Q scrutiny.

c. Sections I and II of the Subcontractor Oversight Plan form should be modified to require Form A-6003-991 to be attached to the Passport Comm Log when completed.

d. Section II of the Subcontractor Oversight Plan form requiring approval signatures by the relevant ESH&Q managers should be changed to require both the Manager – Industrial Safety and the Manager – Industrial Hygiene to approve, since subcontractor oversight plans may be required in one of these areas but not the other.

TFC-ESHQ-S_SAF-C-07, *Subcontractor Oversight* does not provide recommended subcontractor oversight frequency or depth of review. Some checklist considerations for scope are provided in Attachments A through D of the procedure for Safety and Health,

Radiological Control, Environmental and Quality Assurance, respectively; however, considerations such as prior site work by the subcontractor, the detailed nature of the work (especially for field activities), and potential vulnerability should the work not be performed safely and as planned should be considered when determining the oversight frequency and depth. This issue is identified as **Observation SO-O12**.

4.5 Functional Area: Document Control

Objective:

WRPS activities ensure that specified documents, either in hard copy or electronic media, including latest changes thereto, are controlled, reviewed for adequacy, approved for release, and distributed to and used at the location where the work is being performed.

Criteria/Requirements:

1. The following controls shall be applied to documents and changes thereto:

    - The identification of controlled documents
    - The specified distribution of controlled documents for use at the appropriate location
    - The identification of individuals responsible for the preparation, review, approval, and distribution of controlled documents
    - The review of controlled documents for completeness and approval prior to distribution, and a method to ensure the correct documents are being used.

2. Changes to documents, except minor changes, shall be reviewed and approved by the same organizations or technical disciplines that performed the original review and approval, unless other organizations (those affected by the change) are specifically designated.
3. The individuals reviewing document changes shall have access to pertinent document background data or information upon which to base their review and approval.
4. Minor changes to documents, such as inconsequential editorial corrections, shall not require that the revised documents receive the same review and approval as the original documents. The following are considered editorial changes:

    - Correcting grammar or spelling
    - Renumbering sections or attachments that do not affect the sequence of work
    - Changing the title or number of the document and updating organizational titles.

5. To avoid a possible omission of a required review, the type of minor changes that do not require such a review and approval, and the person who can authorize such a decision, shall be clearly delineated.

RESULTS

Conclusions/Summary:

The objective and organizational structure that supports document control either in hard copy or electronic media, including latest changes thereto, are controlled, reviewed for adequacy, approved for release, and distributed to and used at the location where the work is being performed was found to be adequate. Several improvement opportunities were identified to increase process efficiency and effectiveness. There are no Findings and three Observations for this objective.

Discussion:

TFC-PLN-02, *Quality Assurance Program Description*, Section 6.0 – Document Control was part of the CRAD for the assessment. Document changes of company procedures are under TFC-MD-061, *Transition of CH2M HILL Procedures and Administrative Documents to Washington River Protection Solutions* authorizing change for those procedures and administrative documents that require administrative changes to reflect the new contractual relationship between the TOC and the U.S. Department of Energy ORP.

Procedures that support the subcontractor oversight function provide several instances of conflicting direction. This issue is identified as **Observation SO-13**. In particular, TFC-ESHQ-S_SAF-C-07, *Subcontractor Oversight*, TFC-BSM-CP_CPR-C-05, *Procurement of Services* and TFC-BSM_CP_CPR-P-05, *Subcontract Closeout* are not well integrated to ensure that Buyer Technical Representatives, Contract Requestors and ESH&Q managers can perform their roles and responsibilities effectively and efficiently. For example:

a. Step 4.5 (Closure Oversight Activities) of TFC-ESHQ-S_SAF-C-07, *Subcontractor Oversight*, requires the Buyer Technical Representative and the Safety and Health, Environmental, Radiological Controls and Quality Assurance representatives to "Participate in/provide input to the subcontractor Evaluation of Subcontractor Performance." However, step 4.7 (Subcontract Closeout) of TFC-ESHQ-S_SAF-C-07 states to "Obtain input from the project team and complete the Evaluation of Subcontractor Performance for subcontracts/releases greater than $100K." In effect, conflicting direction exists for subcontracts/releases that are less than or equal to $100K. Also, the wording in TFC-BSM-CP_CPR-C-05, *Procurement of Services*, provides ambiguous direction for releases of a subcontract that individually would equal less than $100K but would result in a subcontract totaling greater than $100K.

b. Step 4.6 (Subcontractor Oversight Plan Changes) of TFC-ESHQ-S_SAF-C-07 requires the Buyer Technical Representative to "Maintain the subcontractor oversight plan in the BTR's file for the subcontractor.", with the Records Custodian identified as the "Contract Originator and/or assigned Buyer Technical Representative". However, TFC-BSM-CP_CPR-C-05 does not provide BTR file disposition direction; it states in Section 6.0 (Records) that the Records Custodian for "routine procurement files" is "Procurement".
c. Section 6.0 (Records) of TFC-ESHQ-S_SAF-C-07 identifies Subcontractor Oversight Plans as quality records. However, Section 6.0 (Records) of TFC-BSM-CP_CPR-C-05 identifies "routine procurement files" as non-quality records. If Subcontractor Oversight Plans are considered to be "routine procurement files", this direction is in conflict. If Subcontractor Oversight Plans are not considered to be "routine procurement files", there are no record requirements identified.
d. Step 4.7.3 (Subcontract Closeout) of TFC-BSM-CP_CPR-C-05 requires completion of the Evaluation of Subcontractor Performance form with accompanying "Evaluation Instructions". The Evaluation Instructions do not correlate to the Evaluation of Subcontractor Performance form contents. Also, configuration control should be implemented by processing the Evaluation of Subcontractor Performance form as a site form.
e. Step 4.5.1 of TFC-ESHQ-S_SAF-C-07 requires the BTR and ESH&Q personnel to "Participate in/provide input to the subcontractor Evaluation of Subcontractor Performance"; the procedure does not direct that the Evaluation of Subcontractor Performance be provided to the Procurement Specialist. Step 4.1.3 of TFC-BSM_CP_CPR-P-05, *Subcontract Closeout*, requires the Procurement Specialist to "Include copy of Evaluation of Subcontractor Performance in procurement file <u>if received</u> from BTR or Procurement Support". By default, the Evaluation of Subcontractor Performance would not be filed if not received.

TFC-BSM-CP_CPR-C-05, *Procurement of Services* is unclear as to whether documents identified in the procedure are to be treated as record material. This issue is identified as **Observation SO-14**. For instance:

a. Determination of Required Approval (DRA) forms provide no signature line (as expected for a record document); also, the form is not listed in section 6.0 (Records), but it is to be attached to the 'Passport Comm Log'.
b. The Workplace Substance Abuse Program (WSAP) form provides a signature line for the BTR, but then indicates "Original in BTR File" in that signature area. The procedure also instructs the BTR to attach the WSAP to Passport. Section 6.0 (Records) states that the Procurement Services organization is the records custodian for procurement files. It is not evident why a separate "BTR File" is needed, and why one copy goes into the Passport Comm Log and one into the BTR file.

c. Section 6.0 (Records) does not clearly indicate what items are records and where they are maintained as records. Is Procurement using Passport for records storage? Can a BTR use Passport for their "BTR file"?

During preparation activities for this assessment, a recent revision to TFC-ESHQ-S_SAF-C-07, *Subcontractor Oversight* Rev B-6, issued February 11, 2009 was found to have been processed incorrectly. The issue was captured in PER 09-0246 with the text as follows:

> Type of Procedure Change - Changes were made to this procedure regarding responsibilities for subcontractor oversight; however, the ADCA indicates this is a "minor revision". Changes made are beyond the scope of a "minor revision" as defined in the QAPD. TFC-PLN-02, *Quality Assurance Program Description*, defines a "minor change" as follows:
>
> > Minor changes to documents, such as inconsequential editorial corrections, do not require that the revised documents receive the same review and approval as the original documents. The following are considered editorial changes:
> >
> > 1) Correcting grammar or spelling
> > 2) Renumbering sections or attachments that do not affect the sequence of work
> > 3) Changing the title or number of the document
> > 4) Updating organizational titles.
> >
> > Training - The ADCA was completed to indicate "Classroom Training without Verification" would be given. However, this procedure was issued and effective February 11, 2009 without training provided to BTRs.
> >
> > Impacted Procedures - This procedure interfaces with TFC-BSM-CP_CPR-C-05, *Procurement Of Services*, and Form A-6003-991 (*Subcontractor Oversight Plan*). The ADCA did not indicate there were any impacted procedures, yet the changes would seem to require similar changes to the Procurement of Services procedure and possibly Form A-6003-991.

TFC-ESHQ-S_IH-C-02, *Hazard Communication*, provides an expectation to provide updated Right-to-know (RTK) information within 30-days of receipt of a new hazardous material. During this assessment, the RTK station supporting the recently re-occupied ATCO building was identified as having outdated RTK information. Follow up provided verbal input that "new inventory sheets are being worked on"; however, good business practice would provide for issuance of updated RTK information prior to building re-occupancy. A previous weakness with RTK information not being in place at several work areas/facilities was identified in PER 08-1312 (categorized as a PER/RES, identified during the 10CFR851 Worker Safety and Health Independent Assessment in

June 2008). Corrective action did not provide an extent-of-condition evaluation of other facilities, such as the ATCO shop, but instead focused on evaluation of migration to a paperless system.

TFC-ESHQ-ENV_AP-D-01, *Environmental Oversight of Subcontractors*, was cancelled in June 2006; however, the document is still listed as a company level guidance document in TFC-PLN-73, *Environmental Protection and Compliance Plan*, and should be replaced with TFC-ESHQ-S_SAF-C-07, *Subcontractor Oversight*. This issue is identified as **Observation SO-O15**.

4.6 Functional Area: Records Management

Objective:

WRPS activities ensure that the requirements for the generation, classification, storage, and maintenance of documents designated as quality assurance (QA) records are implemented.

Criteria/Requirements:

1. Records shall be identified, generated, authenticated, maintained, and their final disposition specified. Requirements and responsibilities for these activities shall be documented.
2. Requirements and responsibilities for record transmittal, distribution, retention, maintenance, and disposition shall be established and documented.
3. Records shall be distributed, handled, and controlled in accordance with written procedures.
4. Records shall be traceable to associated items and activities and accurately reflect the work accomplished or information required.
5. Individuals handling records shall protect them from damage, determination, or loss until the records are submitted to the records management system.
6. Records shall be stored in facilities, containers, or a combination thereof, constructed and maintained in a manner which minimizes the risk of damage or destruction.

RESULTS

Conclusions/Summary:

The objective that supports records management for the generation, classification, storage, and maintenance of documents designated as quality assurance (QA) records was found to generally be adequate. There is one Finding and one Observation for this objective.

Discussion:

Record retention requirements for Subcontractor Oversight Plan (screening) forms (Form A-6003-991) and scheduling requirements for subcontractor oversight activities are not implemented as described in TFC-ESHQ-S_SAF-C-07, *Subcontractor Oversight*. This issue is identified as **Finding SO-F6**. Specifically:

a. Section 6 (Records) of TFC-ESHQ-S_SAF-C-07 identifies that Subcontractor Oversight Plan (screening) forms (Form A-6003-991) are to be maintained as quality records. Interviewed Buyer Technical Representatives, responsible to implement the record retention were not aware of the quality record expectation. Contributing to this issue is an absence of direction within the procedure to implement the record retention requirement.

b. Step 4.2.3 (Post-Award Oversight Activities) of TFC-ESHQ-S_SAF-C-07 requires subcontractor oversight activities to be placed on the (WRPS) integrated assessment schedule or project schedules. Though subcontractor oversight activities are sometimes scheduled on department-level schedules, use of the integrated assessment schedule or project schedules is not implemented. As a suggested corrective action, the scheduling procedure requirement should provide increased flexibility as to the schedule means, allowing use of department schedules or tracked as E-STARS Tasks.

Passport is not recognized as a document 'record' database. TFC-BSM-IRM_DC-C-02, *Records Management*, recognizes documents maintained as records in approved TFC Records Storage Areas (RSAs), the Document Service Centers (DSCs), the Records Holding Areas (RHA), or electronically stored in the Integrated Document Management System (IDMS), but is silent on the Passport database. TFC-BSM-IRM_DC-C-02 should clearly indicate the status of Passport regarding records retention. Interviews with procurement personnel determined that Passport retains information that may be considered to be record material. This issue is identified as **Observation SO-O16**.

ATTACHMENT A
PERSONNEL CONTACTED

Name	Title	Interview	Entrance Meeting	Exit Meeting
Anderson, CE	Technical Specialist, Security & Emergency Services/Events Investigation (PAAA), ESH&Q		X	X
Armstead, M	Manager – Prime Contracts, Business Operations	X		
Beranek, F	Manager – ESH&Q	X		X
Berman, HS	Manager - Engineering		X	
Bowman, TA	Operations Support Specialist, Safety & Health, ESH&Q	X		
Brown, RL	Performance Assurance/Corrective Action, ESH&Q		X	X
Burt, DL	Manager - EVMS Cert & Assurance, Project Integration	X		
Butler, RE	Safety URSWA, Construction and Commissioning, Project Integration	X		
Calderon, LM	Technical Specialist, Industrial Safety, Safety & Health, ESH&Q	X		X
Colosi, KA	Manager - IHLW Program, WTP Support	X		
Conrad, JS	Environmental Specialist, Environmental programs, ESH&Q	X		
Farner, ML	Construction and Commissioning, Project Integration			X
Flasch, MP	Performance Assurance/Corrective Action, ESH&Q		X	X
Flowers, LA	Safety Specialist – IS/IH, ESH&Q Business Operations, Base Operations	X		
Gaydosh, WL	Manager – Industrial Safety, ESH&Q	X		
Hatcher, KA	Manager – Procurement Services, Business Operations	X		
Janecke, JR	Procurement Specialist, Procurement Services, Business Operations	X	X	
Keith, LJ	Manager – Training, Workforce Resources	X		
Kubie, DL	Training Specialist, Training, Workforce Resources		X	
Kummer, DA	Training Specialist, Training, Workforce Resources	X		
Le, TM	Health Physicist, Radiological Controls, ESH&Q	X		
Lepka, SJ	Administrative Specialist - Project Controls, WTP Support	X		

ATTACHMENT A
PERSONNEL CONTACTED

Name	Title	Interview	Entrance Meeting	Exit Meeting
Lesko, AC	Manager - Records & Document Control, Business Operations	X		
Lesko, KF	Manager – Construction and Commissioning, Project Integration	X	X	
Lindholm, MA	Manager – SST Retrieval and Closure		X	
Maciuca, C	Manager – Performance Assurance/Corrective Action, ESH&Q		X	
Marshall, D	Accountant, Finance, Business Operations	X		
Martin, LK	Operations Specialist, Project Construction, Base Operations	X		X
May, SM	Project Cost Analyst, Project Controls, SST Retrieval and Closure	X		
McElroy, ML	Manager – Quality Assurance Services, ESH&Q	X		X
McLellan, GW	Manager - Project Management Systems, Project Integration	X		
Meyers, S	EFSI, Quality Assurance	X		
Netolicky, RA	Quality Assurance Engineer, Quality Assurance Services, ESH&Q	X		
Penick, LR	Operations Support Specialist, Performance Assurance/Corrective Action, ESH&Q	X	X	X
Peters, NL	Technical Specialist, Security & Emergency Services/Events Investigation, ESH&Q	X		
Powers, MJ	Safety Specialist, Safety/IH, ESH&Q Single-Shell Tank, SST Retrieval & Closure	X		
Reynolds, KD	EFSI, Sampling And Well Services	X		
Robinson, JM	Manager – Procurement Services, Business Operations	X	X	
Rolph, JT	Manager – Radiological Controls, ESH&Q	X		
Sax, SM	Manager – Project Operations		X	
Schaleger, JP	Safety Specialist, Industrial Safety, ESH&Q	X		
Silvia, MJ	Performance Assurance/Corrective Action, ESH&Q		X	X
Stickney, RG	Engineer, Central Design Authority and Standards, Engineering	X		
Stredwick, JR	Construction and Commissioning, Project Integration	X		

ATTACHMENT A
PERSONNEL CONTACTED

Name	Title	Interview	Entrance Meeting	Exit Meeting
Sydnor, H	Scientist, Operations Support – Vadose, SST Retrieval & Closure	X		
Taber, TK	Operations Support Specialist, Industrial Safety, ESH&Q	X		
Tifft, SR	Environmental Specialist, Environmental Compliance, ESH&Q	X		
Vacca, JE	Manager – Information Resources, Business Operations	X		
Van Meighem, JS	Technical Specialist – Interface Management, Project Integration	X		
Voogd, JA	Manager - Environmental Compliance, ESH&Q	X		
Wooley, TA	Environmental Specialist, Environmental Compliance, ESH&Q	X		
Zane, RW	Energy Solutions, Industrial Safety	X		

ATTACHMENT B
DOCUMENTS REVIEWED

- DOE Order 414.1C, *Quality Assurance*, approved 06-17-05
- 10CFR830, Subpart A, *Quality Assurance Requirements*
- INPO 05-002, *Human Performance Tools for Engineers – Practices for Anticipating, Preventing, and Catching Engineering Errors* (Vendor Oversight section)
- WRPS Contract DE-AC27-08RV14800, Modification No. M009, Section B, *Supplies or Services and Prices/Costs* and Section J-6, *Small Business Subcontracting Plan*
- Administrative Interface Agreement for Training Records Under Memorandum of Agreement No. CHG-FMOA-2001
- Interface Control Document between The Tank Farm Contractor and the Fluor Hanford Water Utilities Distribution System
- Washington River Protection Solutions LLC and Energy Solutions Federal Services LLC Affiliate Agreement for the DOE Tank Operations Contract #DE-AC-27-08RV14800
- Washington River Protection Solutions LLC and URS-Washington Division Affiliate Agreement for the DOE Tank Operations Contract #DE-AC-27-08RV14800
- Memorandum of Agreement MOA-WRPS-CHPRC-2008, Rev. 0, *Performance and Payment of Services*
- Memorandum of Agreement TOC-MOA-FH-0004, Rev. 0, *Performance and Payment of Services*
- Memorandum of Agreement TOC-MOA-PNNL-0002, Rev. 0, *Performance And Payment Of Services*
- Request for Offsite Services, Job No.29633_FY 2009 ROS No. 36472-03, *Characterize The Aerial Extent Of Mobile Contaminants For Placement Of Interim Barrier Using The Hydraulic Hammer Unit*
- Statement Of Work, Requisition #: 36472, *Drilling and Related Characterization Services*, Revision Number 0,Date September 9, 2008
- Subcontractor Oversight Plan for Contract Requisition 182012, dated 02/10/2009, *Design and Fabrication of Mobile Retrieval Arm System*
- *Audits/Surveillances,* DWO-QAP-001, dated 5/15/06, revision 9 Energy Solutions Condition Report FW-TSV-XR-08-003
- Energy Solutions Federal Services Internal Memo, Quality Assurance Internal Surveillance Report FS-08-IS-002, *Safety Surveillance of Energy Solutions Employee Performance at UPR 81*
- Energy Solutions Federal Services, Internal Memo CAM-08-4955, Quality Assurance Internal Surveillance Report FS-08-IS-001, *Completion Document for 241-UDirect Push Characterization Services*
- Energy Solutions Surveillance Report FS-08-IS-001, dated January 9, 2008, *Completion Document for 241-U Farm Direct Push Characterization Services*
- Energy Solutions Surveillance Report FS-08-IS-002, dated April 15, 2008, *Safety Surveillance of Energy Solutions Employee Performance at UPR-81*
- RPP-MP-003, Rev. 5c, *Integrated Environment, Safety, and Health Management System Description for the Tank Farm Contractor*
- RPP-8411, Rev. 1, *Washington River Protection Solutions Procurement Process Description*

ATTACHMENT B
DOCUMENTS REVIEWED

- *Training Implementation Matrix Per DOE Order 5480.20A*, Rev. 20A-3 dated September 2005
- *FY2009 – WRPS Integrated Assessment Schedule*, dated January 12, 2009
- 24590-WTP-PL-MG-01-001, Rev. 2, *Interface Management Plan* (WTP)
- *Washington River Protection Solutions Parent Organization Support Plan FY 2009*, approved August 29, 2008
- *Washington River Protection Solutions (WRPS) General Provisions*, dated November 20, 2008
- *Washington River Protection Solutions (WRPS) Commercial General Provisions*, dated November 20, 2008
- *Washington River Protection Solutions (WRPS) On-Site Work Provisions*, dated February 10, 2009
- *Washington River Protection Solutions Evaluated Supplier List*, dated October 28, 2008 (including the *Fluor Hanford Evaluated Supplier List*, dated February 13, 2009)
- HNF-MP-5184, Rev. 7, *Washington River Protection Solutions Radiation Protection Program*
- TFC-PLN-02, Rev. E-2, *Quality Assurance Program Description*
- TFC-PLN-43, Rev. A-13, *Tank Operations Contractor Health and Safety Plan*
- TFC-PLN-47, Rev. B-2, *Worker Safety and Health Program*
- TFC-PLN-55, Rev. A-2, *Industrial Hygiene Safety Management Program Plan*
- TFC-PLN-58, Rev, C, *Chemical Management Plan*
- TFC-PLN-73, Rev. B-5, *Environmental Protection and Compliance Plan*
- TFC-PLN-83, Rev. B, *Assurance System Program Description*
- TFC-PLN-102, Rev. A, *TOC Interface Management Plan*
- TFC-POL-16, Rev. B, *Integrated Safety Management System Policy*
- TFC-BSM-AC-C-04, Rev. B-4, *Intercompany Work Exchange Agreements*
- TFC-BSM-CP_CPR-C-02, Rev. A-11, *Noncompetitive Procurement Justification*
- TFC-BSM-CP_CPR-C-05, Rev. H-4, *Procurement of Services*
- TFC-BSM-CP_CPR-C-06, Rev. G-4, *Procurement of Items (Materials)*
- TFC-BSM-CP_CPR-C-09, Rev. B-13, *Supply Chain Process*
- TFC-BSM-CP_CPR-C-17, Rev. A-5, *Interface Management*
- TFC-BSM-CP_CPR-D-02-10, Rev. A-4, *Construction Contracting*
- TFC-BSM-CP_CPR-D-02-13, Rev. A-2, *Services from Other Hanford Prime Contractors*
- TFC-BSM-CP_CPR-D-04.1, Rev. A-2, *Good Subcontract Administration Practices*
- TFC-BSM-CP_CPR-D-04.5, Rev. A-4, *Subcontract Termination*
- TFC-BSM-CP_CPR-D-05.1, Rev. A-4, *Close-out Process*
- TFC-BSM-CP_CPR-D-16, Rev. B, *Preparation, Negotiation, Administration, and Completion of Performance Based Incentives*
- TFC-BSM-CP_CPR-P-04, Rev. A-10, *Subcontract Administration*
- TFC-BSM-CP_CPR-P-05, Rev. B-3, *Subcontract Closeout*
- TFC-ESHQ-S_SAF-C-07, Rev. B-6, *Subcontractor Oversight*
- TFC-ESHQ-Q_ADM-C-01, Rev. A-3, *Graded Quality Assurance*

ATTACHMENT B
DOCUMENTS REVIEWED

- TFC-ESHQ-Q_ADM-C-09, Rev. A-3, *Supplier Quality Assurance Program Evaluation*
- TFC-ESHQ-Q_PP-P-02, Rev. D-3, *Quality Assurance Surveillances*
- TFC-PRJ-CM-C-01, Rev. A-13, *Construction Management*
- TFC-PRJ-CM-C-05, Rev. A-3, *Construction Subcontractor Progress Meetings*
- TFC-PRJ-CM-C-08, Rev. B-2, *Construction Completion and Turnover*
- TFC-PRJ-CM-C-015, Rev. A-1, *Construction Subcontractor Closeout*
- Form A-6003-991, Rev. 06/05, *Subcontractor Oversight Plan* (Screening Form)
- Key Word Search 'Interface' of the Problem Evaluation Request Database for the 3-Year Period Ending January 30, 2009
- Key Word Search 'Oversight' of the Problem Evaluation Request Database for the 3-Year Period Ending January 29, 2009
- Key Word Search 'Subcontractor' of the Problem Evaluation Request Database for the 3-Year Period Ending January 29, 2009
- *Independent Assessment of Worker Safety and Health Program, FY2008-CH2M-I-0005, dated June 24, 2008*
- *PAAA Program Review/Self Assessment, Management Assessment Report FY2008-SHQ-M-0159*, dated May 29, 2008
- *Subcontractor Oversight Process,* Management Assessment, FY2007-SHQ-M-0135 dated March 26, 2007
- *Interface Program – Management Assessment Report FY2006-SPPC-M-0150*, dated September 26, 2006
- *CH2M HILL Corporate Independent Assessment of CHG Hanford Tank Farm Activities*, dated January 13, 2006
- *Contractor Reporting of Non-Compliances, Management Assessment FY2006-PAAA-M-0156*, dated December 28, 2005
- *QA Management Assessment of Subcontractor/Vendor QA Implementation Plans – FY2006-QA-M-0122*, dated December 21, 2005
- *Management Assessment of Contractor Flow Down of Requirements*, FY2005-PA-M-0175, dated June 5, 2005
- *River Protection Project Quality Assurance Audit Report RPP-A-02-09, Revision 0, Construction Quality Requirement Flow-Down and Subcontractor Oversight*, dated November 25, 2002

Save

Problem Evaluation Request (PER)

WRPS-PER-2009-0474
In Process/Work

PER No	Date of Discovery	Time of Discovery (24:00)	Project
WRPS-PER-2009-0474	03/27/2009	10:00	Procurement

Location

All Tank Farms

How Was Problem Discovered

Independent Assessment

Description of Concern or Problem

An Independent Assessment of Subcontract Management and Oversight was conducted from February 23 through March 5, 2009. The assessment resulted in six findings and sixteen observations. Details are provided in the attached assessment report.

Finding SO-F3 Subcontractor Oversight Plan (screening) forms (Form A-6003-991) have not been developed, or have been completed incorrectly, for many subcontracts as required in TFC-ESHQ-S_SAF-C-07, Subcontractor Oversight.

Requirement Not Satisfied	Source Document Number
TFC-ESHQ-S_SAF-C-07, Subcontractor Oversight.	FY2009-WRPS-I-0002
Equipment Identification Number	**System Identification**

Immediate actions Taken or Planned

Discussed the issue with the Manager - ESH&Q.

Recommended Corrective actions

Recommend assignment to F Beranek as a PER/RES.

Originator Contact

No

Originators Name	Originators ID	Originators Phone	Date Initiated
Flasch, Michael P	H5610828	(509) 373-4473	03/27/2009

SHIFT OPERATIONS REVIEW

Title

Independent Assessment of Subcontract Management and Oversight - Finding SO-F3

How Discovered	Agency
self-ID prior to event	

Reportability	SSC Operability	Operability Review	Comp Measures Req
Non-Reportable	N/A	N/A	

Describe actions Taken or Recommended

No additional actions taken or recommended by BO SSM

SO Reviewer Name	SO Reviewer ID	SO Reviewer Phone	SO Review Date
Malhan, Rakesh	H0046812	(509) 373-2689	03/27/2009

SCREENING

PER Significance Level	
PER with Resolution	

Independent Assessment Review	Occurrence Report Number	Externally Identified	
Yes		No	
Assigned Responsible Manager	**Facilities Rep / SSO**	**Safety Management Rep**	
Beranek, Fred			

Program	Safety Management Program
• N/A	• ^N/A^

PER Screening Comments			
PER w/ Res with informal Apparent Cause Analysis (Nancy Brown 03/30/09)			
Causal Code			
A4B4C03	Management Problem Supervisory Methods LTA Appropriate level of in-task supervision not determined prior to task		
MGT/Comm/Train	**Human Performance**	**GEMS**	**Equip/Eng/Other**
Failed Barrier	**ORPS Code**	**Functional Area**	**Work Process**
	Not Applicable	Sub-Contractor	• Assessments • Subcontractor Oversight
ISMS	**Consequence Code**		
Perform work within the controls	• Procedure - Administrative - Procedure ambiguous, in error, could not be worked, was not used • Records - Errors or incomplete data recording, checklists		
PER Screening Chair	**PER Screening Chair ID**	**PER Screening Chair Phone**	**PER Screening Date**
Brown, Nancy L	H0088797	(509) 373-0992	03/30/2009
PAAA REVIEW			
PAAA Screening	**PAAA Codes**	**Function Codes**	
PAAA, Non-NTS Reportable	• 10 CFR 830.122 (d)(1) • 10 CFR 830.122 (e)(1)	• Records	
NTS Report Number	**NTS Report Date**		
Repetitive / Recurrent	**Programmatic**	**Intentional Violation / Misrepresentation**	
No	No	No	
PAAA Screening Comments			
PAAA Reviewer Name	**PAAA Review Date**		
Waters, Shaun F	03/30/2009		
PAAA Approver Name	**PAAA Approve Date**		
Anderson, Craig E	04/01/2009		
CAUSE ANALYSIS			
Description of Occurrence			
Subcontractor Oversight Plan (screening) forms (Form A-6003-991) have not been developed, or have been completed incorrectly, for many subcontracts as required in TFC-ESHQ-S_SAF-C-07, Subcontractor Oversight.			
Extent of Condition			
Subcontractor Oversight Plan (screening) forms (Form A-6003-991) have not been developed, or have been completed for a significant number of activities. This issue was determined to be wide spread in Tank Farms. This is a unique process so the extent of condition review is limited to the completion of this form.			
Safety Significance			
The lack of a subcontractor oversight plan does not impact safety to human, environmental or equipment as the vvalidity of the implementing organization oversight process was not in question.			
Generic Implications			
Remedial Corrective Action			
Discussion of the finding with the Manager of ESH&Q			
Causal Analysis, Apparent Cause and/or Root Cause Analysis			

The cause of the problem was two fold. First the forms were required by the process did not include any self checking provisions to ensure the completion of the forms was taking place. Secondly the forms added little value in the opinion of the person performing work and there had been no defined consequence for failure to complete the forms. A workshop held to discuss subcontractor oversight further supported this determination by eliminating the use of the form. Based on these determinations there is no required corrective action needed to address previous failure to complete the form and actions necessary to put a more structured process in place are address in WRPS-PER-2009-0472

ATTACHMENTS

Link to PER

RE_ PER2009-472_ 0474_ 0476.msg

RE_ WRPS-PER-2009-0474 Extension Request.msg

Subcontractor Mgt Oversight IA Report.pdf

AUDIT HISTORY

Change Date	Auditor	Comments
03/30/2009 08:19	Owen, Annette	'Source Document Number Available' was changed.
03/30/2009 15:29	Waters, Shaun F	PAAA Codes Changed
03/31/2009 08:21	Brown, Nancy L	Responsible Manager Task Launched by Brown, Nancy L
05/06/2009 13:18	Brown, Nancy L	'SMP Owner' was changed.
05/06/2009 14:06	Glaman, Linda R	'Screening Safety Managemnt Program' was removed - SMP incorrectly identified. L Glaman at the request of M Silvia
06/17/2009 13:00	Bowman, Tami A	'Safety Significance' was changed. 'Extent of Condition' was changed. 'Causal Analysis' was changed.
07/17/2009 14:12	Brown, Robert L	Change to Cause Analysis screen/Corrective Action plan.
07/17/2009 14:13	Brown, Robert L	Change to Cause Analysis screen/Corrective Action plan.
07/17/2009 14:14	Brown, Robert L	'No Corrective actions Needed' was changed.

-- End of Report --
08/06/2009 05:46 PM

Task# WRPS-PER-2009-0474

E-STARS[R] Report
Task Detail Report
08/06/2009 1746

TASK INFORMATION			
Task#	WRPS-PER-2009-0474		
Subject	RES; Independent Assessment of Subcontract Management and Oversight - Finding SO-F3		
Parent Task#		**Status**	Open
Reference		**Due**	08/25/2009
Originator	^PER Coordinator	**Priority**	Medium
Originator Phone		**Category**	PER
Origination Date	03/27/2009 1052	**Generic1**	None
Remote Task#		**Generic2**	None
Deliverable	PER Review	**Generic3**	None
Class	None	**View Permissions**	Global
Instructions	*No Instructions*		

ROUTING LISTS

1	Responsible Manager	Active
	Review the PER Screening Tab and Senior Manager Review for requested data. Complete the task in E-STARS in accordance with TFC-ESHQ-Q_C-C-01, and TFC-ESHQ-Q_ADM-C-12 Apparent Cause Analysis & Corrective Action Planning.	
	• Beranek, Fred - Assign - Completed with comments - 06/11/2009 1459 *Instructions:*	
	• Beranek, Fred - Assign - Completed with comments - 06/17/2009 1300 *Instructions:* Safety Significance- The section needs to state why there is no safety significance. Corrective Actions: The causal analysis states: The procedure, an administrative procedure, is ambiguous and difficult to use causing less than adequate compiltion of records and checklists. This does not match the corrective actions. PER submitted for rework.	
	• Beranek, Fred - Assign - Completed with comments - 07/21/2009 0628 *Instructions:* Based on a workshop held on 6/30/2009 the response is no longer accurate. Bob Brown	
	• ^Independent Assessment Review(Penick, Lee R) - Review - Concur - 07/22/2009 0956 *Instructions:* Independent Assessor Review	
	• Van Meighem, Jeff S - Review - Withdrawn - 05/06/2009 1318 *Instructions:* Safety Management Representative Review	
2	Review Initial PER	Inactive
	Review New PER	
	• ^SO(Malhan, Rakesh) - Review - Concur - 03/27/2009 1540 *Instructions:*	
	• ^PER Screening(Brown, Nancy L) - Review - Concur - 03/30/2009 1404 *Instructions:*	

Task# WRPS-PER-2009-0474

	• ^Mgr Review - Review - Cancelled - 03/31/2009 0821 *Instructions:*
ATTACHMENTS	
Attachments	1. Link to PER 2. RE_ PER2009-472_ 0474_ 0476.msg 3. RE_ WRPS-PER-2009-0474 Extension Request.msg 4. Subcontractor Mgt Oversight IA Report.pdf
COMMENTS	
Poster	^PER Coordinator (Glaman, Linda R) - 05/07/2009 1305
	1st Extension to 6-15-09 per attached email request. LBG 5-9-09
	The Manager is working the PERs however more time is need to ensure proper assignments and completion of requirements. Further extensions will be based on progress on the assignment of PER to responsible party for actions, completion of the cause analysis, and development of corrective actions by 06/15/2009. T Bowman for F Beranek 5-9-09 The extension is approved please include comment.M Silvia for C Maciuca 5-9-09
Poster	Beranek, Fred (Bowman, Tami A) - 06/11/2009 1459
	Completed
	Corrective actions ready for launch. Beranek/Bowman 06/11/2009
Poster	Beranek, Fred (Bowman, Tami A) - 06/17/2009 1300
	Completed
	Please re-evaluate closure. Bowman 06/17/2009
Poster	^PER Coordinator (Glaman, Linda R) - 07/07/2009 0813
	2nd extension to 8-17-09 per attached email. LBG 7-7-09
	Please extend the above referenced PERs as follows: RM Fred Beranek Due 06/15/2009 Extend 08/17/2009 Resolution is pending based on the outcome of the Subcontract Oversight meetings Tami Bowman for F Beranek 7-2-09 approved B Brown for T Maciuca 7-2-09
Poster	Beranek, Fred (Bowman, Tami A) - 07/21/2009 0628
	Completed
	Action complete, please see PIE/CIM evaluation. Bowman 07/21/09

TASK DUE DATE HISTORY

Modified	07/07/2009 0812 - ^PER Coordinator (Glaman, Linda R)	**New Due Date**	08/25/2009 1630
Modified	05/07/2009 1304 - ^PER Coordinator (Glaman, Linda R)	**New Due Date**	06/23/2009 1630
Modified	03/31/2009 0821 - ^PER Coordinator	**New Due Date**	05/19/2009 1630
Modified	03/31/2009 0821 - ^PER Coordinator	**New Due Date**	05/11/2009 1630
Modified	03/27/2009 1052 - ^PER Coordinator	**New Due Date**	03/29/2009 1630

SUB TASK HISTORY

No Subtasks

Task# WRPS-PER-2009-0474

-- end of report --

Message

From: Brown, Robert L
Sent: Thursday, July 02, 2009 3:24 PM
To: ^WRPS Corrective Action Group
Subject: RE: PER2009-472, 0474, 0476

We need to extend these.

From: ^WRPS Corrective Action Group
Sent: Thursday, July 02, 2009 2:11 PM
To: ^WRPS Corrective Action Group; Brown, Robert L
Cc: Beranek, Fred; Bowman, Tamara
Subject: RE: PER2009-472, 0474, 0476
Importance: High

All the subject PERs have been completed and returned for rework by the IA reviewer. This would be the 2nd extension, making the PERs 146 days old at resolution completion.

Thanks...As always, please call if you have questions

Linda RB Glaman
Operations Support Specialist/CAM
376-1776/376-6249
2750E/A-208/R2-87

The Lone CAM-mer

From: Bowman, Tamara
Sent: Thursday, July 02, 2009 2:02 PM
To: ^WRPS Corrective Action Group
Cc: Beranek, Fred
Subject: PER2009-472, 0474, 0476

Please extend the above referenced PERs as follows:

RM Fred Beranek

Due 06/15/2009

Extend 08/17/2009

Resolution is pending based on the outcome of the Subcontract Oversight meetings

Tami Bowman

"Safety - Our Way of Life"
W- 509-372-0031
C- 509-438-5268
Fax- 509-373-2715

Message

From: Silvia, Michael J (Mike)
Sent: Thursday, May 07, 2009 11:32 AM
To: ^WRPS Corrective Action Group; Maciuca, Constantin
Cc: Bowman, Tamara; Beranek, Fred
Subject: RE: WRPS-PER-2009-0476 Extension Request

The Manager is working the PERs however more time is need to ensure proper assignments and completion of requirements. Further extensions will be based on progress on the assignment of PER to responsible party for actions, completion of the cause analysis, and development of corrective actions by 06/15/2009.

The extension is approved please include comment.

Mike

From: ^WRPS Corrective Action Group
Sent: Thursday, May 07, 2009 10:26 AM
To: Silvia, Michael J (Mike); Maciuca, Constantin
Subject: FW: PER Extensions
Importance: High

The following PER with Resolution extension requests have been received, see message below...

WRPS-PER-2009-0472: 1st extension; currently due 5-11; no resolution information.
WRPS-PER-2009-0473: 1st extension; currently due 5-11; no resolution information.
WRPS-PER-2009-0474: 1st extension; currently due 5-11; no resolution information.
WRPS-PER-2009-0476: 1st extension; currently due 5-11; no resolution information.
WRPS-PER-2009-0477: 1st extension; currently due 5-11; no resolution information.

Thanks...As always, please call if you have questions

Linda RB Glaman
Operations Support Specialist/CAM
376-1776/376-6249
2750E/A-208/R2-87

"The only stupid question is the one that remains unasked"

From: Bowman, Tamara
Sent: Thursday, May 07, 2009 8:57 AM
To: ^WRPS Corrective Action Group
Cc: Beranek, Fred
Subject: PER Extensions

Please extend the following PERs:

WRPS-PER-2009-0472, 0473, 0474, 0476, and 0477

PER w/Res

RM Fred Beranek

Curr Due 05/11/2009

Extend 06/15/2009

Additional time is needed to complete actions required for resolution.

Thank you.

Tami Bowman

"Safety - Our Way of Life"
W- 509-372-0031
C- 509-438-5268
Fax- 509-373-2715

Washington River Protection Solutions LLC
Independent Assessment
of
Subcontract Management and Oversight

February 23 to March 10, 2009

Final Report Rev. 0
FY2009-WRPS-I-0002

washington **river**
protection solutions

Approved: _____
M. J. Silvia,
Team Lead

Team Members:

R. L. Brown	3-30-09 Date
M. P. Flasch	03/30/09 Date
L. R. Penick	3/30/09 Date

TABLE of CONTENTS

1.0 INTRODUCTION 1
2.0 PURPOSE AND SCOPE 1
3.0 EXECUTIVE SUMMARY 2
4.0 ASSESSMENT RESULTS 7
4.1 Functional Area: Interface Management 7
4.2 Functional Area: Subcontractor Management and Oversight / Objective #1 9
4.3 Functional Area: Subcontractor Management and Oversight / Objective #2 15
4.4 Functional Area: Subcontractor Management and Oversight / Objective #3 17
4.5 Functional Area: Document Control 23
4.6 Functional Area: Records Management 27

ATTACHMENTS

ATTACHMENT A - PERSONNEL CONTACTED 29
ATTACHMENT B - DOCUMENTS REVIEWED 32

ACRONYMS

AIA	Administrative Interface Agreement
BMA	Blanket Master Agreement
BTR	Buyer's Technical Representative
DOE	Department of Energy
EJTA	Employee Job and Task Analysis
ESH&Q	Environmental, Safety, Health, and Quality
ESRB	Executive Safety Review Board
ESL	Evaluated Suppliers List
FY	Fiscal Year
ICWEA	Intercompany Work Exchange Agreements
ISMS	Integrated Safety Management System
MOP	Management Observation Program
MOU	Memorandum of Agreement
PAAA	Price Anderson Amendment Act
PER	Problem Evaluation Request
POC	Point of Contact
QA	Quality Assurance
ROS	Request for On-site Services
RTK	Right to Know
SME	Subject Matter Expert
SOW	Statement of Work
TOC	Tank Operations Contractor
WRPS	Washington River Protection Solutions
WSHP	Worker Safety and Health Plan

1.0 INTRODUCTION

The Washington River Protection Solutions LLC *Quality Assurance Program Description*, TFC-PLN-02, requires that independent assessments be conducted to evaluate the performance of work processes with regard to requirements, customer expectations, and efforts to achieve the mission and goals of the organization. From February 23, 2009 through March 10, 2009, an independent assessment was conducted of the Washington River Protection Solutions management systems that implement the subcontract management and oversight processes. The assessment was led by Mr. Michael J. Silvia, with support from Performance Assurance personnel Robert L. Brown, Michael P. Flasch, and Lee R. Penick. This report documents the assessment details and results of the areas evaluated.

2.0 PURPOSE AND SCOPE

The purpose of this independent assessment was to evaluate the effectiveness of implementation of processes that support subcontract management and oversight. Assessment scope was as follows:

- Interface Management
  - Interfaces are effectively identified, documented, communicated and implemented with other Hanford Site Prime Contractors, as well as with other external contractors and companies.
- Subcontract Management and Oversight
  - Subcontract management and oversight activities are performed by knowledgeable WRPS personnel in accordance with well-defined and documented process expectations.
  - Subcontract management and oversight activities are supported by effective flow-down of requirements to the subcontractors.
  - Subcontract management and oversight activities are supported by periodic interface with responsible subcontractor personnel, including observations of in-progress field work, corrective action management, records management, and notification and reporting.
  - The WRPS Quality Assurance program is employed effectively to support subcontract management and oversight activities.

This assessment was performed in accordance with Washington River Protection Solutions procedure TFC-ESHQ-AP-C-02, *Independent Assessments*.

3.0 EXECUTIVE SUMMARY

The Independent Assessment of subcontract management and oversight was conducted February 23, 2009 through March 10, 2009. Though personnel resources and procedural direction are in place to provide Environment, Safety, Health and & Quality oversight of subcontracts, the subcontract oversight process needs significant improvement in both program content and implementation. The assessment team concluded the following:

a. The mission and organizational structure that supports interface management to ensure identification, documentation, and communication was found to be adequate and effective at present time.
b. Functional leadership for, and knowledge of, personnel performing the subcontractor oversight function, and effective implementation of the subcontractor oversight expectations, are less than adequate.
c. Flow-down of requirements to the subcontractors was found to be adequate and effective.
d. Implementation of periodic interface with responsible subcontractor personnel, including observations of in-progress field work, corrective action management, records management, and notification and reporting was found to be less than adequate.
e. Document control and records management practices were determined to generally be adequate, the exception being maintenance of subcontractor oversight screening documentation as quality records. Several improvement opportunities were identified to increase process efficiency and effectiveness.

This assessment resulted in six findings and sixteen observations, as follows; the details for each are provided in the body of the report.

Findings:

SO-F1 Programmatic ownership and responsibility for success of the subcontract oversight function have not been established. Guiding Principle 1 of RPP-MP-003, *Integrated Environment, Safety, and Health Management System Description for the Tank Farm Operations Contractor*, establishes expectations for processes to provide clear roles and responsibilities. **(WRPS-PER-2009-0472)**

SO-F2 Assessment activities have not been performed over the past several years to ensure that implementation of the subcontractor management and oversight process is achieving its desired objective. Core Function 5 (Provide Feedback and Continuous Improvement) of Integrated Safety Management as described in RPP-MP-003, *Integrated Environment, Safety, and Health Management System Description for the Tank Farm Operations Contractor*, establishes expectations for feedback and continuous process improvement. **(WRPS-PER-2009-0473)**

SO-F3 Subcontractor Oversight Plan (screening) forms (Form A-6003-991) have not been developed, or have been completed incorrectly, for many subcontracts as required in TFC-ESHQ-S_SAF-C-07, *Subcontractor Oversight*. **(WRPS-PER-2009-0474)**

SO-F4 Subcontractor oversight activities are not performed by the Environmental Programs organization as required by RPP-MP-003, *Integrated Environment, Safety, and Health Management System Description for the Tank Operations Contractor*, and TFC-ESHQ-S_SAF-C-07, *Subcontractor Oversight*. **(WRPS-PER-2009-0475)**

SO-F5 Buyer Technical Representatives and Contract Requestors have incorrectly determined in several instances that Subject Matter Expert (SME) approval of relevant Statements of Work (SOW) was not necessary. For example, approval by the Radiological Control organization was not identified for several inspection field work activities to be performed within Tank Farms. Contributing to this issue was incorrect determination by the Buyer Technical Representatives and Contract Requestors as to the need for some of the SMEs to approve the SOWs. This is identified as ineffective implementation of step 4.3.19 (Creating and Approving the Statement of Work) of TFC-BSM-CP_CPR-C-05, *Procurement of Services*, to determine the required SOW approvals. **(WRPS-PER-2009-0476)**

SO-F6 Record retention requirements for Subcontractor Oversight Plan (screening) forms and scheduling requirements for subcontractor oversight activities are not implemented as described in TFC-ESHQ-S_SAF-C-07, *Subcontractor Oversight*. **(WRPS-PER-2009-0477)**

Observations:

SO-O1 As an area for improvement, development and implementation of a qualification card process, would assist in ensuring that personnel assigned to perform the Buyer Technical Representative function possess the requisite training and experience to perform the function effectively. **(WRPS-PER-2009-0478)**

SO-O2 As an area for improvement, development, staffing and implementation of a limited size core group of personnel to perform all Buyer Technical Representative (BTR) functions has potential to increase both efficiency and effectiveness of the BTR role. **(WRPS-PER-2009-0479)**

SO-O3 Training and awareness of Buyer Technical Representatives regarding their functional roles and responsibilities for subcontractor oversight are less than adequate. **(WRPS-PER-2009-0480)**

SO-O4 Personnel performing Buyer Technical Representative (BTR) responsibilities achieve authorization to perform the function, and are listed on the Procurement web site; however, there is no requirement to receive re-authorization if personnel have not recently performed BTR responsibilities. **(WRPS-PER-2009-0481)**

SO-O5 The *Training Implementation Matrix per DOE Order 5480.20A* dated September 2005 needs to be revised to reflect the correct 'Compliance Reference' for 'Subcontractor Personnel Qualification'. Specifically, Table 2 (General Requirements Matrix), Chapter 1 (General Requirements), Section 3 (Subcontractor Personnel Qualification) references the compliance reference document as TFC-BSM-CP_CPR-C-03, *Buyer's Technical Representative Process*; however, this procedure was cancelled in April 2007, with the key elements incorporated into TFC-BSM-CP_CPR-C-05, *Procurement of Services*. **(WRPS-PER-2009-0482)**

SO-O6 A comprehensive assessment of the integration, procedural direction, and implementation of the WRPS procurement processes has not been performed since calendar year 2002. **(WRPS-PER-2009-0483)**

SO-O7 Subcontractor oversight plan documentation was observed indicating that planned oversight would consist of routine functional area surveillance activities already in place, with no specificity as to the relevant contract/release. Consequently, there is no assurance that the planned oversight activities would consider elements of the contract/release that may require oversight scope of a specialized nature, nor is there assurance that the specific subcontracts received necessary oversight. **(WRPS-PER-2009-0484)**

SO-O8 Observation indicated the ATCO shop is presently in use by construction subcontractors, but there is no evidence of a "Formal Turnover" of the facility from WRPS to the subcontractor in accordance with the provisions of the Statement of Work (reference Contract Requisition 00180390, *241-C-110 Waste Retrieval Systems Installation*). **(WRPS-PER-2009-0485)**

SO-O9 As an area for improvement, actions to screen subcontracts to determine the need for subcontractor oversight and to develop subcontractor oversight plans per TFC-ESHQ-S_SAF-C-07, *Subcontractor Oversight*, should be performed as subcontract pre-award activities rather than as post-award activities. Also, there is no timeframe specified to complete the subcontract oversight screening activity or to develop subcontract oversight plans. **(WRPS-PER-2009-0486)**

SO-O10 *Evaluation of Subcontractor Performance* evaluations are not performed for some subcontracts that roll over year-to-year.
(WRPS-PER-2009-0487)

SO-O11 Several areas of improvement were identified for the Subcontractor Oversight Form (Form A-6003-991) to strengthen the determination process for subcontractor oversight. For example:

a. Approval documentation for functional area managers responsible for subcontract oversight activities needs to be strengthened.
b. Subcontract activities involving field work do not receive particular emphasis for oversight activity.

(WRPS-PER-2009-0488)

SO-O12 TFC-ESHQ-S_SAF-C-07, *Subcontractor Oversight* does not provide recommended subcontractor oversight frequency or depth of review.
(WRPS-PER-2009-0489)

SO-O13 Procedures that support the subcontractor oversight function provide several instances of conflicting direction. In particular, the following procedures are not well integrated to ensure that Buyer Technical Representatives, ESH&Q managers, and Contract Requestors can perform their roles and responsibilities effectively and efficiently:

a. TFC-ESHQ-S_SAF-C-07, *Subcontractor Oversight*
b. TFC-BSM-CP_CPR-C-05, *Procurement of Services*
c. TFC-BSM_CP_CPR-P-05, *Subcontract Closeout*

(WRPS-PER-2009-0490)

SO-O14 TFC-BSM-CP_CPR-C-05, *Procurement of Services* is unclear as to whether the following documents identified in the procedure are to be treated as record material:

a. Determination of Required Approval (DRA) forms
b. Workplace Substance Abuse Program (WSAP) form

(WRPS-PER-2009-0491)

SO-O15 TFC-ESHQ-ENV_AP-D-01, *Environmental Oversight of Subcontractors*, was cancelled in June 2006; however, the document is still listed as a company level guidance document in TFC-PLN-73, *Environmental Protection and Compliance Plan*, and should be replaced with TFC-ESHQ-S_SAF-C-07, *Subcontractor Oversight*.
(WRPS-PER-2009-0492)

SO-O16 Passport is not recognized as a document 'record' database. TFC-BSM-IRM_DC-C-02, *Records Management*, recognizes documents maintained as records in approved TFC Records Storage Areas, Document Service Centers, Records Holding Areas, or electronically stored in the Integrated Document Management System, but is silent on the 'record' determination for the Passport database. **(WRPS-PER-2009-0493)**

4.0 ASSESSMENT RESULTS

The purpose and scope of the assessment were presented at the entrance meeting conducted on February 23, 2009. During the performance of the assessment, periodic assessment team meetings were held to apprise responsible personnel of assessment issues and overall progress. Final assessment results were presented at an exit meeting on March 10, 2009.

The approach used during the assessment consisted of interviews and document reviews, with limited field observation due to the nature of the assessment. Attachment A provides a listing of personnel contacted during the assessment; Attachment B provides a listing of documents reviewed in support of the assessment.

4.1 Functional Area: Interface Management

Objective:

Interfaces are effectively identified, documented, communicated and implemented with other Hanford Site Prime Contractors, as well as with other external contractors and companies.

Criteria/Requirements:

1. Formal intercompany work exchange agreements (ICWEA) are in place between Washington River Protection Solutions LLC (WRPS) and affiliate companies to perform work without fee.
2. Work performed under ICWEAs is approved and authorized.
3. Memorandum of Agreement documents are in place to describe the business management agreements between WRPS and other contractors for the performance and payment of services.
4. Interface agreements are in place, as necessary, to support formal commitments with other Hanford Site Prime Contractors. (Physical system interfaces are controlled via an Interface Control Document, while administrative interfaces are controlled via an Administrative Interface Agreement.)
5. Statements of Work are applied, as necessary, to define the scope, safety, quality, and technical requirements for services that are provided for a discrete transfer of funds.
6. The WRPS assessment program is implemented to monitor the effectiveness of the interface management processes and implementation of safety, environmental, radiological, and quality requirements stated in interface documents.

RESULTS

Conclusion Statement:

The mission and organizational structure that supports interface management to ensure identification, documentation, and communication was found to be adequate and effective at present time. A management assessment is scheduled to review the status of interface documents and validate previous gap analysis to ensure contractual commitments and interfaces are being addressed. There are no Findings or Observations for this objective.

Discussion:

Project Integration consists of five organizations with each having a unique function and responsibility. New to tank farms under the prime contract is Interface Management. The function of this organization is to develop documents that assist with the integration of Hanford Site requirements either shared or provided by new and existing prime contractors under the Department of Energy offices.

Intercompany work exchange agreements (ICWEA) are a subset of the documents that are used to describe services and material request between affiliates, prime contractors, and subcontractors performing work for Washington River Protection Solutions LLC (WRPS). Interface Management will manage the program that communicates, establishes policy and assist in the development of documents for prime contract interfaces points established by each of the respective prime contracts. These documents consist of Memorandum of Agreements (MOA), Interface Control Documents (ICDs), and Administrative Interface Agreements (AIA), while ICWEA documents (blanket master agreement (BMA), request for on-site services (ROS), statement of work (SOW), etc) are controlled and issued by the Procurement Services and Prime Contract.

The processes established under company policies, plans, and procedures require approvals and authorization of ICWEA prior to work commencing. TFC-PLN-102, *TOC Interface Management Plan* outlines the requirements in the Contract related to the Interface Management function and defines the execution/portfolio management strategy the TOC will apply to meet these requirements and support the line management projects. The implementing document for interface management is TFC-BSM-CP_CPR-C-17, *Interface Management.* Interface Management has recently completed the development and updates of prime contract MOAs. The process of developing other interface management documentation to implement formal commitment related to the cooperative transfer of material, energy, or data across company boundaries is on going and tracked by Interface Management.

The Interface Management plan and procedure outline the basic roles, responsibilities and process for the program and development of required documentation. As the program and process progress over the next six to twelve months, focus on areas such as program ownership, field implementation responsibilities, and contractor oversight will need to be

integrated. The roles listed in the plan for interface owner and associated point of contact (POC) will need to flow-down to the procedure level and may need expanding. Assessments, meetings, and issue tracking and resolution will provide feedback on where improvements could be needed in the future.

4.2 Functional Area: Subcontractor Management and Oversight / Objective #1

Objective:

Subcontract management and oversight activities are performed by knowledgeable WRPS personnel in accordance with well-defined and documented process expectations.

Criteria/Requirements:

1. Buyer Technical Representatives (BTRs) and Contract Requestors understand their subcontractor oversight roles and responsibilities, as follows:

    a. BTRs have completed the necessary training and qualification.
    b. BTRs provide technical direction/clarification to the subcontractor to ensure performance of all elements in accordance with the statement of work without placing emphasis on schedule or cost to the detriment of quality, safety, or the environment.
    c. BTRs provide internal coordination of, and interface with, the subcontractor regarding various technical requirements, such as the following:

        i. quality assurance
        ii. safety, health
        iii. Security and Emergency Services
        iv. protective forces
        v. environmental
        vi. Price-Anderson Amendments Act, and
        vii. ISMS principles applicable to the performance of the Contract pursuant to Tank Operations Contract implementing procedures.

2. For subcontracts, BTRs and Contract Requestors ensure subcontract personnel have training and qualifications commensurate with the responsibilities.
3. Roles and responsibility for personnel managing and performing the subcontractor oversight function are clearly established and are implemented effectively.

RESULTS

Conclusion Statement:

Functional leadership for, and knowledge of, personnel performing the subcontractor oversight function, and effective implementation of the subcontractor oversight expectations, are less than adequate. There are two Findings and six Observations for this objective.

Discussion:

Programmatic ownership and responsibility for success of the subcontract oversight function have not been established. Guiding Principle 1 of RPP-MP-003, *Integrated Environment, Safety, and Health Management System Description for the Tank Farm Operations Contractor*, establishes expectations for processes to provide clear roles and responsibilities. TFC-BSM-CP_CPR-C-05, *Procurement of Services* and TFC-ESHQ-S_SAF-C-07, *Subcontractor Oversight*, provide applicable roles and responsibilities for the tasks applicable to the procurement process and subcontractor management and oversight; however, the functional area managers for these procedures acknowledge only their specific functional roles and responsibilities in the overall process. This issue is identified as **Finding SO-F1**. In particular:

a. ISMS Guiding Principle 1 mandates that clear and unambiguous lines of authority and responsibility are established and maintained at all organizational levels. Though the relevant ESH&Q functional area managers confirmed ownership responsibility for their respective functional areas, an individual to serve as the collective management sponsor is not evident.
b. Though the Manager – Industrial Safety is the Functional Area Manager for the subcontract oversight procedure (TFC-ESHQ-S_SAF-C-07, *Subcontractor Oversight*) and the Manager – Procurement Services is responsible for the Buyer Technical Representative function to coordinate the development and implementation of subcontractor oversight plans, neither individual feels that they own or are responsible for success of the subcontractor oversight function.
c. 'Functional area manager' and 'document owner' responsibilities for the above procedure transitioned from the Quality Assurance organization to the Industrial Safety organization with revision B-4 in February 2008. An expectation that process ownership accompany the transfer of procedure ownership was not considered in the transition.
d. Though functional area manager responsibility for the above procedure has recently transitioned, the Manager – Quality Assurance Services remains responsible for the Subcontract Oversight form (Form A-6003-991).
e. PER 09-0166, issued January 27, 2009, discussed knowledge deficiencies encountered with several BTRs regarding the expectations for and implementation of subcontract oversight plans. This PER was categorized as PER/RES, and assigned to the Manager – Procurement Services.

Assessment activities have not been performed over the past several years to ensure that implementation of the subcontractor management and oversight process is achieving its desired objective. Core Function 5 (Provide Feedback and Continuous Improvement) of Integrated Safety Management as described in RPP-MP-003, *Integrated Environment, Safety, and Health Management System Description for the Tank Farm Operations Contractor*, establishes expectations for feedback and continuous process improvement. This issue is identified as **Finding SO-F2**. Contributing factors are as follows:

a. Comprehensive assessments of the subcontractor management and oversight process have not been performed in approximately nine years. Assessment activities have focused on identification and resolution of subcontract management and oversight issues in specific organizational areas, without performance of process assessments to identify and resolve the underlying issues.

    1. A series of subcontract management effectiveness assessments were performed in FY2002, but only one has been performed since (ref. FY-2007-SHQ-M-0135, *Subcontractor Oversight Process*, dated March 26, 2007, performed by the Quality Assurance organization). The one assessment report indicated an assessment of shallow scope and depth of the subcontractor oversight process.
    2. An independent Assessment of '*CH2M HILL Corporate Independent Assessment of CHG Hanford Tank Farm Activities* performed in December 2005 identified "There is no articulated strategy to describe how we approach subcontractor activity in the independent assessment program. ... This issue is relevant because of the heightened expectations from the DOE with respect to our responsibility for ensuring adequate performance of our subcontractors." This issue was supported by a recommendation that "The ESRB should determine if the company strategy to ensure adequate subcontractor oversight is adequately articulated and sufficiently comprehensive" (reference PER 06-0084). The closure documentation for this PER did not provide evidence that the recommendation was considered for action by the ESRB.
    3. An Independent Assessment of 'Procurement to Include Subcontractor Oversight' was planned for FY 2006, but was subsequently cancelled. This assessment was initially planned, in part, in response to PER 06-0084 (January 2006) recommending "The ESRB should determine if the company strategy to ensure adequate subcontractor oversight is adequately articulated and sufficiently comprehensive." Insufficient follow-through of this issue indicates a missed opportunity to preclude the current adverse trend.
    4. There are no further assessments planned in the subcontract management and oversight effectiveness topical area in FY2009.
    5. At the time of the assessment, there are no personnel in the Quality Assurance, Safety or Procurement line management teams qualified to lead Management or Specialty Assessment activities, via completion of Course # 350319, *Management Assessment Team Leader Qualification* or

Course # 357319, *Assessment Team Leader Requalification*. Though the Manager – Quality Services was previously qualified to lead assessment teams, the qualification expired on February 12, 2009. It is recognized that another member (non-management) of the Quality Services organization is presently qualified to lead assessment teams.

6. RPP-8411, *Washington River Protection Solutions Procurement Process Description* (co-approved by ORP) states "... ensure that every product or service purchased meets all necessary technical standards and requirements"; however, monitoring and evaluation of the procurement process are not implemented via implementation of self-assessment processes as discussed in the document to promote continuous improvement (reference sections 2.3, *Oversight and Compliance: Self-Assessment*, and 4.7, *Continuous Process Improvement*). In particular, expectations of section 5.6.1, *Managing Subcontractor Performance* to facilitate exemplary subcontract performance through monitoring of subcontractors to ensure ESH&Q program compliance are infrequently performed.
7. MOPs are not performed of the Subcontractor Oversight function as described in TFC-ESHQ-S_SAF-P-06, *Safety Assessments*. Attachment A (Safety and Health Program Functional Elements and Minimum Assessment Periodicity) identifies Subcontractor Oversight as a topic to be considered in development of the annual safety program assessments and MOP topics; however, review of MOP records in IDMS indicates there have been only two MOPs performed in this area over the past four years. The annual (fiscal year) schedule for Safety and Health program MOPS on topics in Attachment A, such as Subcontractor Oversight, has not been developed for FY2009 as described in Step 4.1 of the procedure. The issue of not scheduling safety MOPs to cover Subcontractor Oversight and other S&H areas is similar to the issue described in PER 08-0252.

b. Several Problem Evaluation Requests (approximately ten PERs) have identified ineffective implementation of subcontractor oversight plans, as identified during Management and Specialty Assessments. However, the corrective action plans associated with the relevant PERs have focused on the functional area responsible for the specific subcontract management and oversight plans, without communication to the process owners (e.g., presently, the Industrial Safety organization). Consequently, emergence of an adverse performance trend has not been identified of the subcontractor oversight process to enable focus on process implementation deficiencies.

c. Discussion with a Safety SME indicated they spend much more time reviewing documents in the office, (submittals, work packages, etc.) than performing field surveillances. The SME stated that not all time spent in the field is necessarily documented as a surveillance. Also, discussions with two SME's indicate they expect the BTR to bring a subcontractor oversight plan screening form to them to be signed or request it be developed, but they don't expect to have to initiate the

oversight screening form themselves. One interviewed SME, specifically asked if he was familiar with the new release of the Subcontractor Oversight procedure dated February 11, 2009 and his responsibility to develop the plan as indicated below, stated that he was not aware.

> 3.2 "Safety & Health, Environmental, Quality Assurance, and Radiological Controls personnel are jointly responsible for coordinating subcontractor oversight activities with the buyer's technical representative (BTR) as specified below. When required, they will develop a Subcontractor Oversight plan and provide it to the BTR and Procurement for transmittal to the Subcontractor."

Presently, for several (approximately 30) subcontracts/releases that apply to in-farm and design/build procurements, the assigned BTR is an administrative individual that does not possess technical knowledge and experience necessary to ensure that elements of the subcontract management and oversight process are implemented effectively. As an area for improvement, development and implementation of a qualification card process, especially of a dual qualification level to differentiate between administrative and technical procurements involving field work, would assist in ensuring that personnel assigned to perform the BTR function possess the requisite training and experience to perform the function effectively. This issue is identified as **Observation SO-O1**.

Personnel that perform the BTR function, when interviewed, stated that implementation of the BTR responsibilities frequently impose upon their normal position duties, and BTR responsibilities are not receiving an appropriate level of commitment. Consequently, decisions are made that result in less than adequate attention to BTR responsibilities. Presently, 36 personnel who are embedded in the line organizations perform the BTR function as a collateral duty. Administrative personnel performing the associated BTR functions appear motivated and interested in success of the subcontract management and oversight process, but sometimes do not recognize or provide challenge when process elements are not implemented in an effective manner (such as responsible functional area managers incorrectly concluding that oversight of field work was not needed). Interview results also indicated that the process knowledge and time commitment necessary to effectively perform BTR responsibilities are not receiving an appropriate level of commitment by most BTRs. As an area for improvement, development, staffing and implementation of a limited size core group of personnel to perform all BTR functions has potential to increase both efficiency and effectiveness of the BTR role. This issue is identified as **Observation SO-O2**.

The method and depth of training provided to BTRs is less than adequate to ensure that BTRs are fully trained to assume the functional roles and responsibilities. BTRs frequently cited a desire for additional training. Document reviews and interviews conducted determined training and awareness of Buyer Technical Representatives regarding their functional roles and responsibilities for subcontractor oversight are less than adequate. This issue is identified as **Observation SO-O3**. For example:

a. Several BTRs stated that they were not aware of the BTR role in subcontractor oversight. Previous assessments found additional examples of BTRs stating that they had no knowledge of TFC-ESHQ-S_SAF-C-07, *Subcontractor Oversight* or the use of Form A-6003-991 (Subcontractor Oversight Plan) to determine the need for oversight of subcontractors.
b. Contributing to this knowledge weakness is discontinuation of a continuing training activity for BTRs that was removed in February 2008. Consequently, personnel performing BTR responsibilities are not provided with continuing training opportunities to maintain proficiency as BTRs.
c. Recent revisions to TFC-BSM-CP_CPR-C-05 that impacted BTR roles specified "Training will be provided to BTRs in their quarterly update"; however, as noted above, quarterly updates have not been provided since 2008.
d. When interviewed, presently active BTRs stated that they would welcome the concept of continuing training. Course #350246, *Buyer Technical Representative Upgrade Class* is the training provided to authorized BTRs; 130 current WRPS personnel have completed Course #350246, *Buyer Technical Representative Upgrade Class* since calendar year 2001, of which 72 are authorized to perform BTR responsibilities, of which 36 are actively performing BTR responsibilities.
e. The procedure for subcontractor oversight provides no delineation between the types of subcontracts (e.g., administrative procurement activities, rather than procurement activities involving field work, though staff augmentation procurements are excluded) and provides no guidance for determining or developing the level or type of subcontractor oversight that might be appropriate for a given type of subcontract, i.e. design, construction, etc. Consequently, BTR knowledge and awareness of subcontractor oversight expectations is entirely dependent upon the BTR's technical knowledge and experience.
f. Increased familiarization with Passport was cited by most BTRs as a desired training activity. In addition, several authorized (but inactive) BTRs are not authorized to access Passport; subsequently, their ability to effectively perform the BTR function is significantly minimized should this support be needed.

Personnel performing Buyer Technical Representative (BTR) responsibilities achieve authorization to perform the function, and are listed on the Procurement web site; however, there is no requirement to receive re-authorization if personnel have not recently performed BTR responsibilities. Consequently, personnel performing BTR responsibilities do not maintain proficiency as BTRs, and are not made aware of changes to BTR processes and expectations or to changes in the procurement process. As an area for improvement, re-authorization of personnel performing BTR responsibilities should be considered (e.g., BTR function authorization removed) if they have not actively performed BTR responsibilities within a specified period of time. This issue is identified as **Observation SO-O4**.

The *Training Implementation Matrix per DOE Order 5480.20A* dated September 2005 needs to be revised to reflect the correct 'Compliance Reference' for 'Subcontractor Personnel Qualification'. Specifically, Table 2 (General Requirements Matrix), Chapter 1 (General Requirements), Section 3 (Subcontractor Personnel Qualification) references the compliance reference document as TFC-BSM-CP_CPR-C-03, *Buyer's Technical Representative Process*; however, this procedure was cancelled in April 2007, with the key elements incorporated into TFC-BSM-CP_CPR-C-05, *Procurement of Services*. Discussion with the Training Manager identified that the need for a revision to the Training Implementation Matrix has been identified and is in progress, including removal of the above reference. This issue is identified as **Observation SO-O5**.

A comprehensive assessment of the integration, procedural direction, and implementation of the WRPS procurement processes has not been performed since calendar year 2002. As an improvement opportunity, performance of an assessment in this area should be considered, to include interface management with the prime contractors and affiliates within the assessment scope. This issue is identified as **Observation SO-O6**.

4.3 Functional Area: Subcontractor Management and Oversight / Objective #2

Objective:

Subcontractor management and oversight activities are supported by effective flow-down of requirements to the subcontractors.

Criteria/Requirements:

1. General site and project-specific safety, health, radiological, environmental, and quality requirements are included in contracts and statements of work, including the following as flowed down through the procurement process to subcontractors:

    a. The Tank Operations Contractor (TOC) Health and Safety Plan (HASP) and the Price Anderson Amendment Act reporting responsibility is applicable to subcontractors who may be involved in tank farm work activities such as design, construction, operation, maintenance, decontamination, decommissioning, and environmental restoration activities.
    b. The medical contractor is responsible for scheduling employees and the employees of contractors, and lower-tier subcontractors for medical qualification examinations and medical monitoring based on the data provided through the EJTA. Results of medical examinations and monitoring are reported to employees, employees of contractors and lower-tier subcontractors, and their respective managers or supervisors. The medical contractor is responsible for maintaining medical records in accordance with the applicable OSHA and DOE requirements.

c. The Chemical Management Plan is relevant to subcontractors involved in the management of hazardous materials.
d. Processes are used to communicate hazardous material information to all personnel who work with hazardous materials during any activity in the tank farms.
e. Construction subcontractors are required to implement the TOC worker safety and health plan (WSHP). The scope, technical complexity, and risk of the construction activity determines the applicable state and federal requirements, as well as the TOC safety procedures, work planning process, and field oversight required.
f. As detailed in HNF-MP-5184 (*Washington River Protection Solutions Radiation Protection Program*) requirements contained in 10 CFR Part 835 are invoked to establish radiation protection standards, limits, and program requirements for protecting individuals from ionizing radiation.
g. The *Washington River Protection Solutions (WRPS) On-Site Work Provisions* elements are invoked, to include the following:

    i. Required Notifications
    ii. Investigation Support
    iii. Reporting and Record Keeping
    iv. Site-wide Qualification and Training
    v. Site Deliveries
    vi. Security
    vii. Medical Evaluations
    viii. Radiation Protection
    ix. Emergency Management
    x. Workplace Substance Abuse Programs
    xi. Whistleblower Protection

2. Subcontractor oversight activities consider reporting of non-compliances to 10CFR851 and PAAA.

RESULTS

Conclusion Statement:

The objective and organizational structure that supports effective flow-down of requirements to the subcontractors was found to be adequate and effective. There are no Findings or Observations for this objective.

Discussion:

TFC-BSM-CP_CPR-C-05, *Procurement of Services*, and TFC-BSM-CP_CPR-C-06, *Procurement of Items (Materials)* ensure that the WRPS contract requirements receive

appropriate flow-down to subcontractors. The responsibility to implement requirements flow down lies with the Buyers Technical Representative (BTR) as described in TFC-BSM_CPR-C-05 which identifies the BTR as responsible to ensure deliverables and requirements are clearly defined. BTRs ensure company policies, procedures, and ISMS flow-down, and Safety, Procurement and Quality Assurance requirements are communicated to subcontractors and incorporated into their work efforts. BTRs are the authorized communication link between WRPS technical staff and the subcontractor to clarify questions, procedures, establish priorities, authorize overtime/accelerate progress and processes. BTRs work in concert with procurement specialists to develop new subcontracts and modify existing subcontracts to reflect changing scope and/or field conditions. Specific applications of this responsibility are contained in Section 4.0.

Document reviews and interviews determined that the flow-down of WRPS applicable contract requirements are usually listed in both blanket master agreements and statements of work for subcontractor activities Several minor examples of ineffective requirements flow-down were noted that were judged to have no significant impact. Several assessors evaluated the BMAs and SOWs developed by different contract requestors and BTRs and found no issues. Examples: Review of construction requisition 182095 and SOW; Requisition 00176418, *C-104 Engineering Design Support* and Contract Requisition 00180390; and *241-C-110 Waste Retrieval Systems Installation.* The TOC HASP and PAAA responsibilities are flowed down to the subcontractor as are requirements for a Chemical Management Plan, On-Site Work Provisions, and applicability to 10 CFR 851.

4.4 Functional Area: Subcontractor Management and Oversight / Objective #3

Objective:

Subcontractor management and oversight activities are supported by periodic interface with responsible subcontractor personnel, including observations of in-progress field work, corrective action management, records management, and notification and reporting.

Criteria/Requirements:

1. Subcontractor Oversight Plans are in place for all activities identified on the Subcontractor Oversight Plan screening forms, with the screening form results located in the Buyer Technical Representative (BTR) files.
2. Subcontractor oversight activities are captured on the integrated assessment schedule or project schedule, as appropriate (e.g., progress meeting participation, Management Observation Program (MOP) conduct, periodic monitoring of performance).
3. Oversight files are maintained for each subcontractor to document oversight activities and responses to any findings and issues.
4. Subcontractor Oversight Plans are maintained as quality records.

5. Subcontractor performance evaluation history files are reviewed by BTRs, as necessary, to ensure that opportunities to bid for work are provided to quality performers.
6. Findings and issues resulting from subcontractor oversight activities receive appropriate corrective actions that prevent recurrence.
7. The WRPS assessment process is applied to evaluate oversight of subcontractor performance, including hands-on work and field implementation of administrative and technical procedures and involve workers, supervisors, and managers.
8. Subcontractor oversight activities consider subcontractor knowledge of 10CFR851 requirements (such as worker rights, posting of worker rights, etc,).
9. Subcontractor oversight activities consider the effectiveness of reporting of non-compliances to 10CFR851 and PAAA.

Results

Conclusion Statement:

The objective and organizational structure that supports implementation of periodic interface with responsible subcontractor personnel, including observations of in-progress field work, corrective action management, records management, and notification and reporting was found to be less than adequate. There are three Findings and six Observations for this objective.

Discussion:

As detailed in this section, several issues were identified relating to implementation of subcontract oversight expectations. Contributing to these issues is inconsistent interpretations as to what constitutes a satisfactory subcontractor oversight plan. For example, interview results revealed the following interpretations:

a.) Completion of section II of the Subcontractor Oversight Plan form (Form A-6003-991, *Subcontractor Oversight Plan*) that identifies necessary oversight activities.
b.) Development of specific subcontractor oversight criteria that are to be implemented to support item a., and
c.) Generation of a detailed subcontractor oversight plan that is scheduled and implemented on a pre-determined frequency.

Subcontractor Oversight Plan (screening) forms (Form A-6003-991) have not been developed, or have been completed incorrectly, for many subcontracts as required in TFC-ESHQ-S_SAF-C-07, *Subcontractor Oversight*. Consequently, BTR coordination actions to ensure that subcontractor oversight coordination activities are defined and implemented are frequently not provided. This issue is identified as **Finding SO-F3**. It is recognized that considerable field oversight is performed, particularly in the industrial

safety area; however, there is no assurance that these oversight activities effectively support subcontract management and oversight. The following examples support the finding:

a. Many subcontracts/releases (15 of 34 based upon a sample by the assessment team) have not been screened to determine whether subcontractor oversight plans are necessary.
b. Subcontract oversight screening activities indicate a need for oversight of field activities for only 36 of 55 subcontracts involving field work (65%, as of February 2009), based upon a sample review by the Safety organization. Consequently, subcontract oversight plans and schedules have frequently not been implemented for subcontracts involving field work activities.
c. Feedback received during the assessment indicated that some personnel responsible for BTR activities incorrectly believed that subcontract activities implemented via the WRPS work control system did not require development of Subcontractor Oversight Plans.
d. In one instance, the 'subcontract oversight' function understanding by the responsible BTR was to review contractor invoices for budget and scope impact, rather than ESH&Q oversight of subcontractor activities.
e. Article 2.0 (Integration of Environment, Safety, Health and Quality (ESH&Q) Into Work Planning and Execution), Item 2.1.11 (General) of the WRPS On-Site Work Provisions states "Open and effective communication shall exist between the SUBCONTRACTOR and the Buyer's Technical Representative (BTR) to support the management of ESH&Q issues and initiatives." Though several BTRs were aware of this clause, they did not interpret the clause to encompass subcontract management and oversight.

Subcontractor oversight activities are not performed by the Environmental Programs organization as required by RPP-MP-003, *Integrated Environment, Safety, and Health Management System Description for the Tank Operations Contractor*, and TFC-ESHQ-S_SAF-C-07, *Subcontractor Oversight*. Consequently, Environmental Compliance personnel do not implement necessary environmental field activities. Current Environmental Surveillance checklists do not identify subcontractor oversight as within scope of Tank Farm facilities. This issue is identified as **Finding SO-F4**.

TFC-BSM-CP_CPR-C-05, *Procurement of Services*, establishes the process for which subcontractor oversight is identified through the development of procurement documents such as the Blanket Master Agreement (BMA) and Statement of Work (SOW). Several Contract Requisitions were noted to not identify subject matter experts (SMEs) in functional areas impacted by the work scope (e.g., Radiological Control, Environmental Programs, and Quality Assurance). TFC-BSM-CP_CPR-C-05, *Procurement of Services*, Section 4.3 Creating and Approving the Statement of Work requires involvement of SME and others, along with Attachment C of the procedure which functions as the tool the BTR can use. Improper approval routing misses the opportunity to ensure proper requirements are flowed down to the subcontractor via the Statement of Work. TFC-BSM-CP_CPR-C-05 provides a useful tool to identify necessary review and approval

SMEs on a 'Determination of Required Approvals' checklist; however, the Buyer Technical Representative and Contract Requestor incorrectly completed the checklist in several instances, resulting in a conclusion that SME approval of relevant Statements of Work was not necessary. This issue is identified as **Finding SO-F5**. Of ten Requisitions reviewed, five with potential ESH&Q impact (e.g., radioactive waste disposal activities, tank farm entries to support inspections) did not contain appropriate approvals. One example of not involving a relevant SME in the Statement of Work approval process (Radiological Control, reference Requisition 00182095) was identified recently in PER 09-0338 (task releases had not yet been issued on this Requisition). The four additional Requisitions are as follows:

Contract Number/ Requisition Number	Contract Scope	Relevant Functional Area SMEs Not Included in SOW Approval
36572 / 00175072	Tank Farm Inspection Services	Radiological Control
28005 / 00178835	ATL Hazardous Waste Treatment/ Disposal	Quality Assurance
28005 / 00178837	Tank Farm Hazardous Waste Treatment/ Disposal	Quality Assurance
36437 / 00176764	PNNL Support for ILAW Glass Testing	Radiological Control Environmental

There is little objective evidence of Environmental, Safety, or Radiological Control oversight being performed either as specific subcontractor oversight or as management observation program (MOP) walk downs or safety surveillances. Interviews with subcontractor staff at the ATCO shop and Vadose Zone project work indicated little presence by environmental, safety or radiological control staff performing oversight activities. A field walk-down of the ATCO shop by the assessment team on February 26, 2009 identified several instances of poor housekeeping. A contributing factor was that requirements for daily safety inspections had not been flowed down to construction subcontracts, though the Construction subcontractor safety professionals do perform safety inspections. When the ATCO shop storage conditions were observed by the assessment team, prompt action was taken by a WRPS safety professional in attendance and action was taken to capture this issue in the corrective action program (reference PER 09-0355). As described in the PER, contributing to the issue was that requirements for daily safety inspections had not been flowed down to construction subcontracts, though the Construction subcontractor safety professionals do perform safety inspections.

Subcontractor oversight expectations are developed and implemented through coordination with the BTR, contract requestor, and SME, and support by ESHQ SMEs to conduct the required oversight. Interviews and document reviews identified several subcontractor oversight plans indicating that planned oversight would consist of routine functional area surveillance activities already in place, with no specificity as to the relevant contract/release. Consequently, there is no assurance that the planned oversight activities would consider elements of the contract/release that may require oversight scope of a specialized nature, nor is there assurance that the specific subcontracts received the planned oversight. This issue is identified as **Observation SO-O7**. Though a considerable amount of field oversight activity is evident, particularly in the industrial safety area, it is virtually impossible to correlate the actual field work activities to specific subcontractor field activities.

Observation indicated the ATCO shop is presently in use by construction subcontractors, but there is no evidence of a "Formal Turnover" of the facility from WRPS to the subcontractor in accordance with the provisions of the Statement of Work (SOW) (reference Contract Requisition 00180390, *241-C-110 Waste Retrieval Systems Installation*). This issue is identified as **Observation SO-O8**. A review of the SOW finds the SOW vague regarding expectations the facilities being turned over to the subcontractors for work. If item 1.1 of the following text of the SOW is in need of revision, the revision should be processed:

Company Facilities

1.1 When the Company provides onsite facilities (i.e., office/administrative, storage, shop facilities and/or lavatory/sanitary facilities) and furnishings (i.e., refrigerators, stoves, microwaves, furniture), the Company will formally turnover the facility(ies) and furnishings to the Contractor.

The WRPS ESH&Q organization is responsible to provide subcontractor management support to the BTR by 1) communicating requirements, and 2) performing assessments, inspections, and/or surveillances to ensure compliance as discussed in TFC-ESHQ-S_SAF-C 07, *Subcontractor Oversight*. Success of the subcontractor oversight process is based upon the BTR, contractor requestor, and SME working together to ensure that subcontractor oversight is performed as needed and is performed effectively. Actions to screen subcontracts to determine the need for subcontractor oversight and to develop subcontractor oversight plans are performed as post-subcontract award activities via completion of the Subcontractor Oversight Screening form (Form A-6003-991). As an area for improvement, completion of the need for subcontractor oversight (via the subcontract oversight screening form completion) should be considered as a pre-award activity. Should the need for a revision to subcontract oversight be identified, particularly the scope and frequency of subcontractor oversight, a revision to the screening determination could be readily accommodated. If the decision is to retain the post-award determination, a time period following award needs to be specific to direct when the oversight screening activity should be completed. This issue is identified as **Observation SO-O9**.

Evaluation of Subcontractor Performance evaluations are not performed for some subcontracts that roll over year-to-year. Three interviewed BTRs with relevant contracts/releases confirmed that they do not complete the *Evaluation of Subcontractor Performance* evaluations at the end of the fiscal year. Since the contracts potentially never end, there is no trigger to perform this closure activity described in step 4.4 (Closure Oversight Activities) of TFC-ESHQ-S_SAF-C-07, *Subcontractor Oversight.* Consequently, evaluation documentation does not exist to support future subcontract choice considerations. Three interviewed BTRs with relevant contracts/releases confirmed that they do not complete the *Evaluation of Subcontractor Performance* evaluations at the end of the fiscal year. As an improvement opportunity, these evaluations should be completed at the Release level, rather than at the Subcontract level, since Releases are issued at least each year. This issue is identified as **Observation SO-O10**.

Several areas of improvement were identified for the Subcontractor Oversight Form (Form A-6003-991) to strengthen the determination process for subcontractor oversight (this issue is identified as **Observation SO-O11**):

a. To maintain process integrity, a suggested improvement opportunity is to implement one or both of the following recommendations:

    i. Require each of these functional area managers to concur with the screening results by signing in Section I (Oversight Plan Screening) of the form.
    ii. Provide concurrence ability in Passport for each of these managers regarding the need for subcontractor oversight plans in their respective functional area.

b. Section I of the Subcontractor Oversight Plan form should be modified to add a 'Yes/No' determination to the question "Does the work activity involve field work?", which should require increased ESH&Q scrutiny.

c. Sections I and II of the Subcontractor Oversight Plan form should be modified to require Form A-6003-991 to be attached to the Passport Comm Log when completed.

d. Section II of the Subcontractor Oversight Plan form requiring approval signatures by the relevant ESH&Q managers should be changed to require both the Manager – Industrial Safety and the Manager – Industrial Hygiene to approve, since subcontractor oversight plans may be required in one of these areas but not the other.

TFC-ESHQ-S_SAF-C-07, *Subcontractor Oversight* does not provide recommended subcontractor oversight frequency or depth of review. Some checklist considerations for scope are provided in Attachments A through D of the procedure for Safety and Health,

Radiological Control, Environmental and Quality Assurance, respectively; however, considerations such as prior site work by the subcontractor, the detailed nature of the work (especially for field activities), and potential vulnerability should the work not be performed safely and as planned should be considered when determining the oversight frequency and depth. This issue is identified as **Observation SO-O12**.

4.5 Functional Area: Document Control

Objective:

WRPS activities ensure that specified documents, either in hard copy or electronic media, including latest changes thereto, are controlled, reviewed for adequacy, approved for release, and distributed to and used at the location where the work is being performed.

Criteria/Requirements:

1. The following controls shall be applied to documents and changes thereto:

    - The identification of controlled documents
    - The specified distribution of controlled documents for use at the appropriate location
    - The identification of individuals responsible for the preparation, review, approval, and distribution of controlled documents
    - The review of controlled documents for completeness and approval prior to distribution, and a method to ensure the correct documents are being used.

2. Changes to documents, except minor changes, shall be reviewed and approved by the same organizations or technical disciplines that performed the original review and approval, unless other organizations (those affected by the change) are specifically designated.
3. The individuals reviewing document changes shall have access to pertinent document background data or information upon which to base their review and approval.
4. Minor changes to documents, such as inconsequential editorial corrections, shall not require that the revised documents receive the same review and approval as the original documents. The following are considered editorial changes:

    - Correcting grammar or spelling
    - Renumbering sections or attachments that do not affect the sequence of work
    - Changing the title or number of the document and updating organizational titles.

5. To avoid a possible omission of a required review, the type of minor changes that do not require such a review and approval, and the person who can authorize such a decision, shall be clearly delineated.

RESULTS

Conclusions/Summary:

The objective and organizational structure that supports document control either in hard copy or electronic media, including latest changes thereto, are controlled, reviewed for adequacy, approved for release, and distributed to and used at the location where the work is being performed was found to be adequate. Several improvement opportunities were identified to increase process efficiency and effectiveness. There are no Findings and three Observations for this objective.

Discussion:

TFC-PLN-02, *Quality Assurance Program Description*, Section 6.0 – Document Control was part of the CRAD for the assessment. Document changes of company procedures are under TFC-MD-061, *Transition of CH2M HILL Procedures and Administrative Documents to Washington River Protection Solutions* authorizing change for those procedures and administrative documents that require administrative changes to reflect the new contractual relationship between the TOC and the U.S. Department of Energy ORP.

Procedures that support the subcontractor oversight function provide several instances of conflicting direction. This issue is identified as **Observation SO-13**. In particular, TFC-ESHQ-S_SAF-C-07, *Subcontractor Oversight*, TFC-BSM-CP_CPR-C-05, *Procurement of Services* and TFC-BSM_CP_CPR-P-05, *Subcontract Closeout* are not well integrated to ensure that Buyer Technical Representatives, Contract Requestors and ESH&Q managers can perform their roles and responsibilities effectively and efficiently. For example:

a. Step 4.5 (Closure Oversight Activities) of TFC-ESHQ-S_SAF-C-07, *Subcontractor Oversight*, requires the Buyer Technical Representative and the Safety and Health, Environmental, Radiological Controls and Quality Assurance representatives to "Participate in/provide input to the subcontractor Evaluation of Subcontractor Performance." However, step 4.7 (Subcontract Closeout) of TFC-ESHQ-S_SAF-C-07 states to "Obtain input from the project team and complete the Evaluation of Subcontractor Performance for subcontracts/releases greater than $100K." In effect, conflicting direction exists for subcontracts/releases that are less than or equal to $100K. Also, the wording in TFC-BSM-CP_CPR-C-05, *Procurement of Services*, provides ambiguous direction for releases of a subcontract that individually would equal less than $100K but would result in a subcontract totaling greater than $100K.

b. Step 4.6 (Subcontractor Oversight Plan Changes) of TFC-ESHQ-S_SAF-C-07 requires the Buyer Technical Representative to "Maintain the subcontractor oversight plan in the BTR's file for the subcontractor.", with the Records Custodian identified as the "Contract Originator and/or assigned Buyer Technical Representative". However, TFC-BSM-CP_CPR-C-05 does not provide BTR file disposition direction; it states in Section 6.0 (Records) that the Records Custodian for "routine procurement files" is "Procurement".
c. Section 6.0 (Records) of TFC-ESHQ-S_SAF-C-07 identifies Subcontractor Oversight Plans as quality records. However, Section 6.0 (Records) of TFC-BSM-CP_CPR-C-05 identifies "routine procurement files" as non-quality records. If Subcontractor Oversight Plans are considered to be "routine procurement files", this direction is in conflict. If Subcontractor Oversight Plans are not considered to be "routine procurement files", there are no record requirements identified.
d. Step 4.7.3 (Subcontract Closeout) of TFC-BSM-CP_CPR-C-05 requires completion of the Evaluation of Subcontractor Performance form with accompanying "Evaluation Instructions". The Evaluation Instructions do not correlate to the Evaluation of Subcontractor Performance form contents. Also, configuration control should be implemented by processing the Evaluation of Subcontractor Performance form as a site form.
e. Step 4.5.1 of TFC-ESHQ-S_SAF-C-07 requires the BTR and ESH&Q personnel to "Participate in/provide input to the subcontractor Evaluation of Subcontractor Performance"; the procedure does not direct that the Evaluation of Subcontractor Performance be provided to the Procurement Specialist. Step 4.1.3 of TFC-BSM_CP_CPR-P-05, *Subcontract Closeout*, requires the Procurement Specialist to "Include copy of Evaluation of Subcontractor Performance in procurement file <u>if received</u> from BTR or Procurement Support". By default, the Evaluation of Subcontractor Performance would not be filed if not received.

TFC-BSM-CP_CPR-C-05, *Procurement of Services* is unclear as to whether documents identified in the procedure are to be treated as record material. This issue is identified as **Observation SO-14**. For instance:

a. Determination of Required Approval (DRA) forms provide no signature line (as expected for a record document); also, the form is not listed in section 6.0 (Records), but it is to be attached to the 'Passport Comm Log'.
b. The Workplace Substance Abuse Program (WSAP) form provides a signature line for the BTR, but then indicates "Original in BTR File" in that signature area. The procedure also instructs the BTR to attach the WSAP to Passport. Section 6.0 (Records) states that the Procurement Services organization is the records custodian for procurement files. It is not evident why a separate "BTR File" is needed, and why one copy goes into the Passport Comm Log and one into the BTR file.

c. Section 6.0 (Records) does not clearly indicate what items are records and where they are maintained as records. Is Procurement using Passport for records storage? Can a BTR use Passport for their "BTR file"?

During preparation activities for this assessment, a recent revision to TFC-ESHQ-S_SAF-C-07, *Subcontractor Oversight* Rev B-6, issued February 11, 2009 was found to have been processed incorrectly. The issue was captured in PER 09-0246 with the text as follows:

> Type of Procedure Change - Changes were made to this procedure regarding responsibilities for subcontractor oversight; however, the ADCA indicates this is a "minor revision". Changes made are beyond the scope of a "minor revision" as defined in the QAPD. TFC-PLN-02, *Quality Assurance Program Description*, defines a "minor change" as follows:
>
> > Minor changes to documents, such as inconsequential editorial corrections, do not require that the revised documents receive the same review and approval as the original documents. The following are considered editorial changes:
> >
> > 1) Correcting grammar or spelling
> > 2) Renumbering sections or attachments that do not affect the sequence of work
> > 3) Changing the title or number of the document
> > 4) Updating organizational titles.
> >
> > Training - The ADCA was completed to indicate "Classroom Training without Verification" would be given. However, this procedure was issued and effective February 11, 2009 without training provided to BTRs.
> >
> > Impacted Procedures - This procedure interfaces with TFC-BSM-CP_CPR-C-05, *Procurement Of Services*, and Form A-6003-991 (*Subcontractor Oversight Plan*). The ADCA did not indicate there were any impacted procedures, yet the changes would seem to require similar changes to the Procurement of Services procedure and possibly Form A-6003-991.

TFC-ESHQ-S_IH-C-02, *Hazard Communication*, provides an expectation to provide updated Right-to-know (RTK) information within 30-days of receipt of a new hazardous material. During this assessment, the RTK station supporting the recently re-occupied ATCO building was identified as having outdated RTK information. Follow up provided verbal input that "new inventory sheets are being worked on"; however, good business practice would provide for issuance of updated RTK information prior to building re-occupancy. A previous weakness with RTK information not being in place at several work areas/facilities was identified in PER 08-1312 (categorized as a PER/RES, identified during the 10CFR851 Worker Safety and Health Independent Assessment in

June 2008). Corrective action did not provide an extent-of-condition evaluation of other facilities, such as the ATCO shop, but instead focused on evaluation of migration to a paperless system.

TFC-ESHQ-ENV_AP-D-01, *Environmental Oversight of Subcontractors*, was cancelled in June 2006; however, the document is still listed as a company level guidance document in TFC-PLN-73, *Environmental Protection and Compliance Plan*, and should be replaced with TFC-ESHQ-S_SAF-C-07, *Subcontractor Oversight*. This issue is identified as **Observation SO-O15**.

4.6 Functional Area: Records Management

Objective:

WRPS activities ensure that the requirements for the generation, classification, storage, and maintenance of documents designated as quality assurance (QA) records are implemented.

Criteria/Requirements:

1. Records shall be identified, generated, authenticated, maintained, and their final disposition specified. Requirements and responsibilities for these activities shall be documented.
2. Requirements and responsibilities for record transmittal, distribution, retention, maintenance, and disposition shall be established and documented.
3. Records shall be distributed, handled, and controlled in accordance with written procedures.
4. Records shall be traceable to associated items and activities and accurately reflect the work accomplished or information required.
5. Individuals handling records shall protect them from damage, determination, or loss until the records are submitted to the records management system.
6. Records shall be stored in facilities, containers, or a combination thereof, constructed and maintained in a manner which minimizes the risk of damage or destruction.

RESULTS

Conclusions/Summary:

The objective that supports records management for the generation, classification, storage, and maintenance of documents designated as quality assurance (QA) records was found to generally be adequate. There is one Finding and one Observation for this objective.

Discussion:

Record retention requirements for Subcontractor Oversight Plan (screening) forms (Form A-6003-991) and scheduling requirements for subcontractor oversight activities are not implemented as described in TFC-ESHQ-S_SAF-C-07, *Subcontractor Oversight*. This issue is identified as **Finding SO-F6**. Specifically:

a. Section 6 (Records) of TFC-ESHQ-S_SAF-C-07 identifies that Subcontractor Oversight Plan (screening) forms (Form A-6003-991) are to be maintained as quality records. Interviewed Buyer Technical Representatives, responsible to implement the record retention were not aware of the quality record expectation. Contributing to this issue is an absence of direction within the procedure to implement the record retention requirement.

b. Step 4.2.3 (Post-Award Oversight Activities) of TFC-ESHQ-S_SAF-C-07 requires subcontractor oversight activities to be placed on the (WRPS) integrated assessment schedule or project schedules. Though subcontractor oversight activities are sometimes scheduled on department-level schedules, use of the integrated assessment schedule or project schedules is not implemented. As a suggested corrective action, the scheduling procedure requirement should provide increased flexibility as to the schedule means, allowing use of department schedules or tracked as E-STARS Tasks.

Passport is not recognized as a document 'record' database. TFC-BSM-IRM_DC-C-02, *Records Management*, recognizes documents maintained as records in approved TFC Records Storage Areas (RSAs), the Document Service Centers (DSCs), the Records Holding Areas (RHA), or electronically stored in the Integrated Document Management System (IDMS), but is silent on the Passport database. TFC-BSM-IRM_DC-C-02 should clearly indicate the status of Passport regarding records retention. Interviews with procurement personnel determined that Passport retains information that may be considered to be record material. This issue is identified as **Observation SO-O16**.

ATTACHMENT A
PERSONNEL CONTACTED

Name	Title	Interview	Entrance Meeting	Exit Meeting
Anderson, CE	Technical Specialist, Security & Emergency Services/Events Investigation (PAAA), ESH&Q		X	X
Armstead, M	Manager – Prime Contracts, Business Operations	X		
Beranek, F	Manager – ESH&Q	X		X
Berman, HS	Manager - Engineering		X	
Bowman, TA	Operations Support Specialist, Safety & Health, ESH&Q	X		
Brown, RL	Performance Assurance/Corrective Action, ESH&Q		X	X
Burt, DL	Manager - EVMS Cert & Assurance, Project Integration	X		
Butler, RE	Safety URSWA, Construction and Commissioning, Project Integration	X		
Calderon, LM	Technical Specialist, Industrial Safety, Safety & Health, ESH&Q	X		X
Colosi, KA	Manager - IHLW Program, WTP Support	X		
Conrad, JS	Environmental Specialist, Environmental programs, ESH&Q	X		
Farner, ML	Construction and Commissioning, Project Integration			X
Flasch, MP	Performance Assurance/Corrective Action, ESH&Q		X	X
Flowers, LA	Safety Specialist – IS/IH, ESH&Q Business Operations, Base Operations	X		
Gaydosh, WL	Manager – Industrial Safety, ESH&Q	X		
Hatcher, KA	Manager – Procurement Services, Business Operations	X		
Janecke, JR	Procurement Specialist, Procurement Services, Business Operations	X	X	
Keith, LJ	Manager – Training, Workforce Resources	X		
Kubie, DL	Training Specialist, Training, Workforce Resources		X	
Kummer, DA	Training Specialist, Training, Workforce Resources	X		
Le, TM	Health Physicist, Radiological Controls, ESH&Q	X		
Lepka, SJ	Administrative Specialist - Project Controls, WTP Support	X		

ATTACHMENT A
PERSONNEL CONTACTED

Name	Title	Interview	Entrance Meeting	Exit Meeting
Lesko, AC	Manager - Records & Document Control, Business Operations	X		
Lesko, KF	Manager – Construction and Commissioning, Project Integration	X	X	
Lindholm, MA	Manager – SST Retrieval and Closure		X	
Maciuca, C	Manager – Performance Assurance/Corrective Action, ESH&Q		X	
Marshall, D	Accountant, Finance, Business Operations	X		
Martin, LK	Operations Specialist, Project Construction, Base Operations	X		X
May, SM	Project Cost Analyst, Project Controls, SST Retrieval and Closure	X		
McElroy, ML	Manager – Quality Assurance Services, ESH&Q	X		X
McLellan, GW	Manager - Project Management Systems, Project Integration	X		
Meyers, S	EFSI, Quality Assurance	X		
Netolicky, RA	Quality Assurance Engineer, Quality Assurance Services, ESH&Q	X		
Penick, LR	Operations Support Specialist, Performance Assurance/Corrective Action, ESH&Q	X	X	X
Peters, NL	Technical Specialist, Security & Emergency Services/Events Investigation, ESH&Q	X		
Powers, MJ	Safety Specialist, Safety/IH, ESH&Q Single-Shell Tank, SST Retrieval & Closure	X		
Reynolds, KD	EFSI, Sampling And Well Services	X		
Robinson, JM	Manager – Procurement Services, Business Operations	X	X	
Rolph, JT	Manager – Radiological Controls, ESH&Q	X		
Sax, SM	Manager – Project Operations		X	
Schaleger, JP	Safety Specialist, Industrial Safety, ESH&Q	X		
Silvia, MJ	Performance Assurance/Corrective Action, ESH&Q		X	X
Stickney, RG	Engineer, Central Design Authority and Standards, Engineering	X		
Stredwick, JR	Construction and Commissioning, Project Integration	X		

ATTACHMENT A
PERSONNEL CONTACTED

Name	Title	Interview	Entrance Meeting	Exit Meeting
Sydnor, H	Scientist, Operations Support – Vadose, SST Retrieval & Closure	X		
Taber, TK	Operations Support Specialist, Industrial Safety, ESH&Q	X		
Tifft, SR	Environmental Specialist, Environmental Compliance, ESH&Q	X		
Vacca, JE	Manager – Information Resources, Business Operations	X		
Van Meighem, JS	Technical Specialist – Interface Management, Project Integration	X		
Voogd, JA	Manager - Environmental Compliance, ESH&Q	X		
Wooley, TA	Environmental Specialist, Environmental Compliance, ESH&Q	X		
Zane, RW	Energy Solutions, Industrial Safety	X		

ATTACHMENT B
DOCUMENTS REVIEWED

- DOE Order 414.1C, *Quality Assurance*, approved 06-17-05
- 10CFR830, Subpart A, *Quality Assurance Requirements*
- INPO 05-002, *Human Performance Tools for Engineers – Practices for Anticipating, Preventing, and Catching Engineering Errors* (Vendor Oversight section)
- WRPS Contract DE-AC27-08RV14800, Modification No. M009, Section B, *Supplies or Services and Prices/Costs* and Section J-6, *Small Business Subcontracting Plan*
- Administrative Interface Agreement for Training Records Under Memorandum of Agreement No. CHG-FMOA-2001
- Interface Control Document between The Tank Farm Contractor and the Fluor Hanford Water Utilities Distribution System
- Washington River Protection Solutions LLC and Energy Solutions Federal Services LLC Affiliate Agreement for the DOE Tank Operations Contract #DE-AC-27-08RV14800
- Washington River Protection Solutions LLC and URS-Washington Division Affiliate Agreement for the DOE Tank Operations Contract #DE-AC-27-08RV14800
- Memorandum of Agreement MOA-WRPS-CHPRC-2008, Rev. 0, *Performance and Payment of Services*
- Memorandum of Agreement TOC-MOA-FH-0004, Rev. 0, *Performance and Payment of Services*
- Memorandum of Agreement TOC-MOA-PNNL-0002, Rev. 0, *Performance And Payment Of Services*
- Request for Offsite Services, Job No.29633_FY 2009 ROS No. 36472-03, *Characterize The Aerial Extent Of Mobile Contaminants For Placement Of Interim Barrier Using The Hydraulic Hammer Unit*
- Statement Of Work, Requisition #: 36472, *Drilling and Related Characterization Services*, Revision Number 0,Date September 9, 2008
- Subcontractor Oversight Plan for Contract Requisition 182012, dated 02/10/2009, *Design and Fabrication of Mobile Retrieval Arm System*
- *Audits/Surveillances,* DWO-QAP-001, dated 5/15/06, revision 9 Energy Solutions Condition Report FW-TSV-XR-08-003
- Energy Solutions Federal Services Internal Memo, Quality Assurance Internal Surveillance Report FS-08-IS-002, *Safety Surveillance of Energy Solutions Employee Performance at UPR 81*
- Energy Solutions Federal Services, Internal Memo CAM-08-4955, Quality Assurance Internal Surveillance Report FS-08-IS-001, *Completion Document for 241-UDirect Push Characterization Services*
- Energy Solutions Surveillance Report FS-08-IS-001, dated January 9, 2008, *Completion Document for 241-U Farm Direct Push Characterization Services*
- Energy Solutions Surveillance Report FS-08-IS-002, dated April 15, 2008, *Safety Surveillance of Energy Solutions Employee Performance at UPR-81*
- RPP-MP-003, Rev. 5c, *Integrated Environment, Safety, and Health Management System Description for the Tank Farm Contractor*
- RPP-8411, Rev. 1, *Washington River Protection Solutions Procurement Process Description*

ATTACHMENT B
DOCUMENTS REVIEWED

- *Training Implementation Matrix Per DOE Order 5480.20A*, Rev. 20A-3 dated September 2005
- *FY2009 – WRPS Integrated Assessment Schedule*, dated January 12, 2009
- 24590-WTP-PL-MG-01-001, Rev. 2, *Interface Management Plan* (WTP)
- *Washington River Protection Solutions Parent Organization Support Plan FY 2009*, approved August 29, 2008
- *Washington River Protection Solutions (WRPS) General Provisions*, dated November 20, 2008
- *Washington River Protection Solutions (WRPS) Commercial General Provisions*, dated November 20, 2008
- *Washington River Protection Solutions (WRPS) On-Site Work Provisions*, dated February 10, 2009
- *Washington River Protection Solutions Evaluated Supplier List*, dated October 28, 2008 (including the *Fluor Hanford Evaluated Supplier List*, dated February 13, 2009)
- HNF-MP-5184, Rev. 7, *Washington River Protection Solutions Radiation Protection Program*
- TFC-PLN-02, Rev. E-2, *Quality Assurance Program Description*
- TFC-PLN-43, Rev. A-13, *Tank Operations Contractor Health and Safety Plan*
- TFC-PLN-47, Rev. B-2, *Worker Safety and Health Program*
- TFC-PLN-55, Rev. A-2, *Industrial Hygiene Safety Management Program Plan*
- TFC-PLN-58, Rev, C, *Chemical Management Plan*
- TFC-PLN-73, Rev. B-5, *Environmental Protection and Compliance Plan*
- TFC-PLN-83, Rev. B, *Assurance System Program Description*
- TFC-PLN-102, Rev. A, *TOC Interface Management Plan*
- TFC-POL-16, Rev. B, *Integrated Safety Management System Policy*
- TFC-BSM-AC-C-04, Rev. B-4, *Intercompany Work Exchange Agreements*
- TFC-BSM-CP_CPR-C-02, Rev. A-11, *Noncompetitive Procurement Justification*
- TFC-BSM-CP_CPR-C-05, Rev. H-4, *Procurement of Services*
- TFC-BSM-CP_CPR-C-06, Rev. G-4, *Procurement of Items (Materials)*
- TFC-BSM-CP_CPR-C-09, Rev. B-13, *Supply Chain Process*
- TFC-BSM-CP_CPR-C-17, Rev. A-5, *Interface Management*
- TFC-BSM-CP_CPR-D-02-10, Rev. A-4, *Construction Contracting*
- TFC-BSM-CP_CPR-D-02-13, Rev. A-2, *Services from Other Hanford Prime Contractors*
- TFC-BSM-CP_CPR-D-04.1, Rev. A-2, *Good Subcontract Administration Practices*
- TFC-BSM-CP_CPR-D-04.5, Rev. A-4, *Subcontract Termination*
- TFC-BSM-CP_CPR-D-05.1, Rev. A-4, *Close-out Process*
- TFC-BSM-CP_CPR-D-16, Rev. B, *Preparation, Negotiation, Administration, and Completion of Performance Based Incentives*
- TFC-BSM-CP_CPR-P-04, Rev. A-10, *Subcontract Administration*
- TFC-BSM-CP_CPR-P-05, Rev. B-3, *Subcontract Closeout*
- TFC-ESHQ-S_SAF-C-07, Rev. B-6, *Subcontractor Oversight*
- TFC-ESHQ-Q_ADM-C-01, Rev. A-3, *Graded Quality Assurance*

ATTACHMENT B
DOCUMENTS REVIEWED

- TFC-ESHQ-Q_ADM-C-09, Rev. A-3, *Supplier Quality Assurance Program Evaluation*
- TFC-ESHQ-Q_PP-P-02, Rev. D-3, *Quality Assurance Surveillances*
- TFC-PRJ-CM-C-01, Rev. A-13, *Construction Management*
- TFC-PRJ-CM-C-05, Rev. A-3, *Construction Subcontractor Progress Meetings*
- TFC-PRJ-CM-C-08, Rev. B-2, *Construction Completion and Turnover*
- TFC-PRJ-CM-C-015, Rev. A-1, *Construction Subcontractor Closeout*
- Form A-6003-991, Rev. 06/05, *Subcontractor Oversight Plan* (Screening Form)
- Key Word Search 'Interface' of the Problem Evaluation Request Database for the 3-Year Period Ending January 30, 2009
- Key Word Search 'Oversight' of the Problem Evaluation Request Database for the 3-Year Period Ending January 29, 2009
- Key Word Search 'Subcontractor' of the Problem Evaluation Request Database for the 3-Year Period Ending January 29, 2009
- *Independent Assessment of Worker Safety and Health Program, FY2008-CH2M-I-0005, dated June 24, 2008*
- *PAAA Program Review/Self Assessment, Management Assessment Report FY2008-SHQ-M-0159*, dated May 29, 2008
- *Subcontractor Oversight Process,* Management Assessment, FY2007-SHQ-M-0135 dated March 26, 2007
- *Interface Program – Management Assessment Report FY2006-SPPC-M-0150*, dated September 26, 2006
- *CH2M HILL Corporate Independent Assessment of CHG Hanford Tank Farm Activities*, dated January 13, 2006
- *Contractor Reporting of Non-Compliances, Management Assessment FY2006-PAAA-M-0156*, dated December 28, 2005
- *QA Management Assessment of Subcontractor/Vendor QA Implementation Plans – FY2006-QA-M-0122*, dated December 21, 2005
- *Management Assessment of Contractor Flow Down of Requirements*, FY2005-PA-M-0175, dated June 5, 2005
- *River Protection Project Quality Assurance Audit Report RPP-A-02-09, Revision 0, Construction Quality Requirement Flow-Down and Subcontractor Oversight*, dated November 25, 2002

Save

Problem Evaluation Request (PER)

WRPS-PER-2009-0475
In Process/Work

PER No	Date of Discovery	Time of Discovery (24:00)	Project
WRPS-PER-2009-0475	03/27/2009	10:00	Procurement

Location

All Tank Farms

How Was Problem Discovered

Independent Assessment

Description of Concern or Problem

An Independent Assessment of Subcontract Management and Oversight was conducted from February 23 through March 5, 2009. The assessment resulted in six findings and sixteen observations. Details are provided in the attached assessment report.

Finding SO-F4 Subcontractor oversight activities are not performed by the Environmental Programs organization as required by RPP-MP-003, Integrated Environment, Safety, and Health Management System Description for the Tank Operations Contractor, and TFC-ESHQ-S_SAF-C-07, Subcontractor Oversight.

Requirement Not Satisfied	Source Document Number
RPP-MP-003, Integrated Environment, Safety, and Health Management System Description for the Tank Operations Contractor, and TFC-ESHQ-S_SAF-C-07, Subcontractor Oversight	FY2009-WRPS-I-0002

Equipment Identification Number	System Identification

Immediate actions Taken or Planned

M Silvia discussed the issue with the Manager - Environmental Compliance (ESH&Q).

Recommended Corrective actions

Recommend assignment to J Voogd as a PER/RES.

Originator Contact

No

Originators Name	Originators ID	Originators Phone	Date Initiated
Flasch, Michael P	H5610828	(509) 373-4473	03/27/2009

SHIFT OPERATIONS REVIEW

Title

Independent Assessment of Subcontract Management and Oversight - Finding SO-F4

How Discovered	Agency
self-ID prior to event	

Reportability	SSC Operability	Operability Review	Comp Measures Req
Non-Reportable	N/A	N/A	

Describe actions Taken or Recommended

No additional actions taken or recommended by BO SSM

SO Reviewer Name	SO Reviewer ID	SO Reviewer Phone	SO Review Date
Malhan, Rakesh	H0046812	(509) 373-2689	03/27/2009

SCREENING

PER Significance Level	
PER with Resolution	

Independent Assessment Review	Occurrence Report Number	Externally Identified	
Yes		No	
Assigned Responsible Manager	**Facilities Rep / SSO**	**Safety Management Rep**	

Voogd, Jeffry A			
Program		**Safety Management Program**	
• N/A		• ^N/A^	
PER Screening Comments			
PER w/ Res with informal Apparent Cause Analysis (Nancy Brown 03/30/09)			
Causal Code			
A5B4C04	Communications LTA Verbal Communication LTA Verification/repeat back not used		
MGT/Comm/Train	**Human Performance**	**GEMS**	**Equip/Eng/Other**
Failed Barrier	**ORPS Code**	**Functional Area**	**Work Process**
	Not Applicable	Sub-Contractor	• Assessments • Subcontractor Oversight
ISMS	**Consequence Code**		
Perform work within the controls	• Communications - Inadequate communications, roles, responsibilities • Procedure - Administrative - Procedure ambiguous, in error, could not be worked, was not used		
PER Screening Chair	**PER Screening Chair ID**	**PER Screening Chair Phone**	**PER Screening Date**
Brown, Nancy L	H0088797	(509) 373-0992	03/30/2009
PAAA REVIEW			
PAAA Screening	**PAAA Codes**	**Function Codes**	
PAAA, Non-NTS Reportable	• 10 CFR 830.122 (e)(1) • 10 CFR 830.122 (g)(3) • 10 CFR 830.122 (j)(1)	• Performance Assessment (including walk downs)	
NTS Report Number	**NTS Report Date**		
Repetitive / Recurrent	**Programmatic**	**Intentional Violation / Misrepresentation**	
No	No	No	
PAAA Screening Comments			
PAAA Reviewer Name	**PAAA Review Date**		
Anderson, Craig E	04/01/2009		
PAAA Approver Name	**PAAA Approve Date**		
Anderson, Craig E	04/01/2009		
CAUSE ANALYSIS			
Description of Occurrence			
Independant Assessment FY2009-WRPS-I-0002 identified in finding SO-F4: 1) Subcontractor oversight activities are not performed by Environmental Programs organization as required by RPP-MP-003. 2) Consequently, Enviromental Compliance personnel do not implement necessary environmental field activities. 3) Current Environmental Surveillance checklists do not identify subcontractor oversight as within scope of Tank Farm Facilities.			
Extent of Condition			

The stated condition of the assessment could not be found.

1) Environmental Programs performs oversight functions as required by MP-003, section 4.4.4
2) Environmental Compliance personnel do implement necessary field activities to review subcontractor performance.
3) Environmental Surveillance checklists (RPP-ENV-32852) "...are conducted to evaluate compliance with environemental requirements..."

Safety Significance

There is no safety significance.

Generic Implications

Remedial Corrective Action

No corrective action necessary.

Causal Analysis, Apparent Cause and/or Root Cause Analysis

Misunderstanding by the assessor and interviewee during the assessment.

ATTACHMENTS

Link to PER

Subcontractor Mgt Oversight IA Report.pdf

AUDIT HISTORY

Change Date	Auditor	Comments
03/30/2009 08:19	Owen, Annette	'Source Document Number Available' was changed.
03/31/2009 08:22	Brown, Nancy L	Responsible Manager Task Launched by Brown, Nancy L
04/01/2009 11:30	Anderson, Craig E	PAAA Codes Changed
05/06/2009 13:19	Brown, Nancy L	'SMP Owner' was changed.
05/06/2009 14:07	Glaman, Linda R	'Screening Safety Managemnt Program' was removed - SMP incorrectly identified. L Glaman at the request of M Silvia

-- End of Report --
08/06/2009 05:48 PM

Task# WRPS-PER-2009-0475

E-STARS[R] Report
Task Detail Report
08/06/2009 1748

TASK INFORMATION			
Task#	WRPS-PER-2009-0475		
Subject	RES; Independent Assessment of Subcontract Management and Oversight - Finding SO-F4		
Parent Task#		**Status**	Open
Reference		**Due**	05/19/2009
Originator	^PER Coordinator	**Priority**	Medium
Originator Phone		**Category**	PER
Origination Date	03/27/2009 1056	**Generic1**	None
Remote Task#		**Generic2**	None
Deliverable	PER Review	**Generic3**	None
Class	None	**View Permissions**	Global
Instructions	*No Instructions*		

ROUTING LISTS

1	Responsible Manager	Active
	Review the PER Screening Tab and Senior Manager Review for requested data. Complete the task in E-STARS in accordance with TFC-ESHQ-Q_C-C-01, and TFC-ESHQ-Q_ADM-C-12 Apparent Cause Analysis & Corrective Action Planning.	
	• Voogd, Jeffry A - Assign - Completed with comments - 05/07/2009 1518 *Instructions:*	
	• ^Independent Assessment Review(Brown, Robert L) - Review - Concur with comments - 06/17/2009 1529 *Instructions:* Independent Assessor Review	
	• Van Meighem, Jeff S - Review - Withdrawn - 05/06/2009 1319 *Instructions:* Safety Management Representative Review	
2	Review Initial PER	Inactive
	Review New PER	
	• ^SO(Malhan, Rakesh) - Review - Concur - 03/27/2009 1535 *Instructions:*	
	• ^PER Screening(Brown, Nancy L) - Review - Concur - 03/30/2009 1419 *Instructions:*	
	• ^Mgr Review - Review - Cancelled - 03/31/2009 0822 *Instructions:*	

ATTACHMENTS

Attachments	1. Link to PER 2. Subcontractor Mgt Oversight IA Report.pdf

COMMENTS

Poster	Voogd, Jeffry A - 05/07/2009 1518
	Completed
	The stated condition of the assessment could not be found. No evidence was provided in the assessment to substantiate the finding.

Task# WRPS-PER-2009-0475

	1) Environmental Programs performs oversight functions as required by MP-003, section 4.4.4 2) Environmental Compliance personnel do implement necessary field activities to review subcontractor performance. 3) Environmental Surveillance checklists (RPP-ENV-32852) "...are conducted to evaluate compliance with environemental requirements..." There appears to have been a misunderstanding between the assessor and the interviewee during the assessment.
Poster	^Independent Assessment Review (Brown, Robert L) - 06/01/2009 1006
	Reviewed the PER with Jeff Voogd. Requested objective evidence that subcontractor oversite is being performed. Also reviewed the issue that subcontractor oversite by environmental is part of the larger process and may be better addressed in the general context of subcontractor oversite, not simply environmental. Closure will be verfified pending review of information received from Jeff. Bob B
Poster	^Independent Assessment Review (Brown, Robert L) - 06/17/2009 1529
	Concur
	Interviewed Jeff Voogd and reviewed documentation. The explanation of misunderstanding by assesser, when coupled with the separately defined issue of the lack of effective reivew of subcontracts to effectively determin the need for a subcontractor oversight plan is likely the issue and will not be resolved by this PER. Bob B

TASK DUE DATE HISTORY

Modified	03/31/2009 0822 - ^PER Coordinator	**New Due Date**	05/11/2009 1630
Modified	03/31/2009 0822 - ^PER Coordinator	**New Due Date**	05/19/2009 1630
Modified	03/27/2009 1056 - ^PER Coordinator	**New Due Date**	03/29/2009 1630

SUB TASK HISTORY

No Subtasks

-- end of report --

Washington River Protection Solutions LLC
Independent Assessment
of
Subcontract Management and Oversight

February 23 to March 10, 2009

Final Report Rev. 0
FY2009-WRPS-I-0002

washington **river**
protection solutions

Approved: _____
M. J. Silvia,
Team Lead

Team Members:

R. L. Brown	3-30-09 Date
M. P. Flasch	03/30/09 Date
L. R. Penick	3/30/09 Date

TABLE of CONTENTS

1.0 INTRODUCTION 1
2.0 PURPOSE AND SCOPE 1
3.0 EXECUTIVE SUMMARY 2
4.0 ASSESSMENT RESULTS 7
4.1 Functional Area: Interface Management 7
4.2 Functional Area: Subcontractor Management and Oversight / Objective #1 9
4.3 Functional Area: Subcontractor Management and Oversight / Objective #2 15
4.4 Functional Area: Subcontractor Management and Oversight / Objective #3 17
4.5 Functional Area: Document Control 23
4.6 Functional Area: Records Management 27

ATTACHMENTS

ATTACHMENT A - PERSONNEL CONTACTED 29
ATTACHMENT B - DOCUMENTS REVIEWED 32

ACRONYMS

AIA	Administrative Interface Agreement
BMA	Blanket Master Agreement
BTR	Buyer's Technical Representative
DOE	Department of Energy
EJTA	Employee Job and Task Analysis
ESH&Q	Environmental, Safety, Health, and Quality
ESRB	Executive Safety Review Board
ESL	Evaluated Suppliers List
FY	Fiscal Year
ICWEA	Intercompany Work Exchange Agreements
ISMS	Integrated Safety Management System
MOP	Management Observation Program
MOU	Memorandum of Agreement
PAAA	Price Anderson Amendment Act
PER	Problem Evaluation Request
POC	Point of Contact
QA	Quality Assurance
ROS	Request for On-site Services
RTK	Right to Know
SME	Subject Matter Expert
SOW	Statement of Work
TOC	Tank Operations Contractor
WRPS	Washington River Protection Solutions
WSHP	Worker Safety and Health Plan

1.0 INTRODUCTION

The Washington River Protection Solutions LLC *Quality Assurance Program Description*, TFC-PLN-02, requires that independent assessments be conducted to evaluate the performance of work processes with regard to requirements, customer expectations, and efforts to achieve the mission and goals of the organization. From February 23, 2009 through March 10, 2009, an independent assessment was conducted of the Washington River Protection Solutions management systems that implement the subcontract management and oversight processes. The assessment was led by Mr. Michael J. Silvia, with support from Performance Assurance personnel Robert L. Brown, Michael P. Flasch, and Lee R. Penick. This report documents the assessment details and results of the areas evaluated.

2.0 PURPOSE AND SCOPE

The purpose of this independent assessment was to evaluate the effectiveness of implementation of processes that support subcontract management and oversight. Assessment scope was as follows:

- Interface Management
  - Interfaces are effectively identified, documented, communicated and implemented with other Hanford Site Prime Contractors, as well as with other external contractors and companies.
- Subcontract Management and Oversight
  - Subcontract management and oversight activities are performed by knowledgeable WRPS personnel in accordance with well-defined and documented process expectations.
  - Subcontract management and oversight activities are supported by effective flow-down of requirements to the subcontractors.
  - Subcontract management and oversight activities are supported by periodic interface with responsible subcontractor personnel, including observations of in-progress field work, corrective action management, records management, and notification and reporting.
  - The WRPS Quality Assurance program is employed effectively to support subcontract management and oversight activities.

This assessment was performed in accordance with Washington River Protection Solutions procedure TFC-ESHQ-AP-C-02, *Independent Assessments*.

3.0 EXECUTIVE SUMMARY

The Independent Assessment of subcontract management and oversight was conducted February 23, 2009 through March 10, 2009. Though personnel resources and procedural direction are in place to provide Environment, Safety, Health and & Quality oversight of subcontracts, the subcontract oversight process needs significant improvement in both program content and implementation. The assessment team concluded the following:

a. The mission and organizational structure that supports interface management to ensure identification, documentation, and communication was found to be adequate and effective at present time.
b. Functional leadership for, and knowledge of, personnel performing the subcontractor oversight function, and effective implementation of the subcontractor oversight expectations, are less than adequate.
c. Flow-down of requirements to the subcontractors was found to be adequate and effective.
d. Implementation of periodic interface with responsible subcontractor personnel, including observations of in-progress field work, corrective action management, records management, and notification and reporting was found to be less than adequate.
e. Document control and records management practices were determined to generally be adequate, the exception being maintenance of subcontractor oversight screening documentation as quality records. Several improvement opportunities were identified to increase process efficiency and effectiveness.

This assessment resulted in six findings and sixteen observations, as follows; the details for each are provided in the body of the report.

Findings:

SO-F1 Programmatic ownership and responsibility for success of the subcontract oversight function have not been established. Guiding Principle 1 of RPP-MP-003, *Integrated Environment, Safety, and Health Management System Description for the Tank Farm Operations Contractor*, establishes expectations for processes to provide clear roles and responsibilities. **(WRPS-PER-2009-0472)**

SO-F2 Assessment activities have not been performed over the past several years to ensure that implementation of the subcontractor management and oversight process is achieving its desired objective. Core Function 5 (Provide Feedback and Continuous Improvement) of Integrated Safety Management as described in RPP-MP-003, *Integrated Environment, Safety, and Health Management System Description for the Tank Farm Operations Contractor*, establishes expectations for feedback and continuous process improvement. **(WRPS-PER-2009-0473)**

SO-F3 Subcontractor Oversight Plan (screening) forms (Form A-6003-991) have not been developed, or have been completed incorrectly, for many subcontracts as required in TFC-ESHQ-S_SAF-C-07, *Subcontractor Oversight*. **(WRPS-PER-2009-0474)**

SO-F4 Subcontractor oversight activities are not performed by the Environmental Programs organization as required by RPP-MP-003, *Integrated Environment, Safety, and Health Management System Description for the Tank Operations Contractor*, and TFC-ESHQ-S_SAF-C-07, *Subcontractor Oversight*. **(WRPS-PER-2009-0475)**

SO-F5 Buyer Technical Representatives and Contract Requestors have incorrectly determined in several instances that Subject Matter Expert (SME) approval of relevant Statements of Work (SOW) was not necessary. For example, approval by the Radiological Control organization was not identified for several inspection field work activities to be performed within Tank Farms. Contributing to this issue was incorrect determination by the Buyer Technical Representatives and Contract Requestors as to the need for some of the SMEs to approve the SOWs. This is identified as ineffective implementation of step 4.3.19 (Creating and Approving the Statement of Work) of TFC-BSM-CP_CPR-C-05, *Procurement of Services*, to determine the required SOW approvals. **(WRPS-PER-2009-0476)**

SO-F6 Record retention requirements for Subcontractor Oversight Plan (screening) forms and scheduling requirements for subcontractor oversight activities are not implemented as described in TFC-ESHQ-S_SAF-C-07, *Subcontractor Oversight*. **(WRPS-PER-2009-0477)**

Observations:

SO-O1 As an area for improvement, development and implementation of a qualification card process, would assist in ensuring that personnel assigned to perform the Buyer Technical Representative function possess the requisite training and experience to perform the function effectively. **(WRPS-PER-2009-0478)**

SO-O2 As an area for improvement, development, staffing and implementation of a limited size core group of personnel to perform all Buyer Technical Representative (BTR) functions has potential to increase both efficiency and effectiveness of the BTR role. **(WRPS-PER-2009-0479)**

SO-O3 Training and awareness of Buyer Technical Representatives regarding their functional roles and responsibilities for subcontractor oversight are less than adequate. **(WRPS-PER-2009-0480)**

SO-O4 Personnel performing Buyer Technical Representative (BTR) responsibilities achieve authorization to perform the function, and are listed on the Procurement web site; however, there is no requirement to receive re-authorization if personnel have not recently performed BTR responsibilities. **(WRPS-PER-2009-0481)**

SO-O5 The *Training Implementation Matrix per DOE Order 5480.20A* dated September 2005 needs to be revised to reflect the correct 'Compliance Reference' for 'Subcontractor Personnel Qualification'. Specifically, Table 2 (General Requirements Matrix), Chapter 1 (General Requirements), Section 3 (Subcontractor Personnel Qualification) references the compliance reference document as TFC-BSM-CP_CPR-C-03, *Buyer's Technical Representative Process*; however, this procedure was cancelled in April 2007, with the key elements incorporated into TFC-BSM-CP_CPR-C-05, *Procurement of Services*. **(WRPS-PER-2009-0482)**

SO-O6 A comprehensive assessment of the integration, procedural direction, and implementation of the WRPS procurement processes has not been performed since calendar year 2002. **(WRPS-PER-2009-0483)**

SO-O7 Subcontractor oversight plan documentation was observed indicating that planned oversight would consist of routine functional area surveillance activities already in place, with no specificity as to the relevant contract/release. Consequently, there is no assurance that the planned oversight activities would consider elements of the contract/release that may require oversight scope of a specialized nature, nor is there assurance that the specific subcontracts received necessary oversight. **(WRPS-PER-2009-0484)**

SO-O8 Observation indicated the ATCO shop is presently in use by construction subcontractors, but there is no evidence of a "Formal Turnover" of the facility from WRPS to the subcontractor in accordance with the provisions of the Statement of Work (reference Contract Requisition 00180390, *241-C-110 Waste Retrieval Systems Installation*). **(WRPS-PER-2009-0485)**

SO-O9 As an area for improvement, actions to screen subcontracts to determine the need for subcontractor oversight and to develop subcontractor oversight plans per TFC-ESHQ-S_SAF-C-07, *Subcontractor Oversight*, should be performed as subcontract pre-award activities rather than as post-award activities. Also, there is no timeframe specified to complete the subcontract oversight screening activity or to develop subcontract oversight plans. **(WRPS-PER-2009-0486)**

SO-O10 *Evaluation of Subcontractor Performance* evaluations are not performed for some subcontracts that roll over year-to-year.
(WRPS-PER-2009-0487)

SO-O11 Several areas of improvement were identified for the Subcontractor Oversight Form (Form A-6003-991) to strengthen the determination process for subcontractor oversight. For example:

a. Approval documentation for functional area managers responsible for subcontract oversight activities needs to be strengthened.
b. Subcontract activities involving field work do not receive particular emphasis for oversight activity.

(WRPS-PER-2009-0488)

SO-O12 TFC-ESHQ-S_SAF-C-07, *Subcontractor Oversight* does not provide recommended subcontractor oversight frequency or depth of review.
(WRPS-PER-2009-0489)

SO-O13 Procedures that support the subcontractor oversight function provide several instances of conflicting direction. In particular, the following procedures are not well integrated to ensure that Buyer Technical Representatives, ESH&Q managers, and Contract Requestors can perform their roles and responsibilities effectively and efficiently:

a. TFC-ESHQ-S_SAF-C-07, *Subcontractor Oversight*
b. TFC-BSM-CP_CPR-C-05, *Procurement of Services*
c. TFC-BSM_CP_CPR-P-05, *Subcontract Closeout*

(WRPS-PER-2009-0490)

SO-O14 TFC-BSM-CP_CPR-C-05, *Procurement of Services* is unclear as to whether the following documents identified in the procedure are to be treated as record material:

a. Determination of Required Approval (DRA) forms
b. Workplace Substance Abuse Program (WSAP) form

(WRPS-PER-2009-0491)

SO-O15 TFC-ESHQ-ENV_AP-D-01, *Environmental Oversight of Subcontractors*, was cancelled in June 2006; however, the document is still listed as a company level guidance document in TFC-PLN-73, *Environmental Protection and Compliance Plan*, and should be replaced with TFC-ESHQ-S_SAF-C-07, *Subcontractor Oversight*.
(WRPS-PER-2009-0492)

SO-O16 Passport is not recognized as a document 'record' database. TFC-BSM-IRM_DC-C-02, *Records Management*, recognizes documents maintained as records in approved TFC Records Storage Areas, Document Service Centers, Records Holding Areas, or electronically stored in the Integrated Document Management System, but is silent on the 'record' determination for the Passport database. **(WRPS-PER-2009-0493)**

4.0 ASSESSMENT RESULTS

The purpose and scope of the assessment were presented at the entrance meeting conducted on February 23, 2009. During the performance of the assessment, periodic assessment team meetings were held to apprise responsible personnel of assessment issues and overall progress. Final assessment results were presented at an exit meeting on March 10, 2009.

The approach used during the assessment consisted of interviews and document reviews, with limited field observation due to the nature of the assessment. Attachment A provides a listing of personnel contacted during the assessment; Attachment B provides a listing of documents reviewed in support of the assessment.

4.1 Functional Area: Interface Management

Objective:

Interfaces are effectively identified, documented, communicated and implemented with other Hanford Site Prime Contractors, as well as with other external contractors and companies.

Criteria/Requirements:

1. Formal intercompany work exchange agreements (ICWEA) are in place between Washington River Protection Solutions LLC (WRPS) and affiliate companies to perform work without fee.
2. Work performed under ICWEAs is approved and authorized.
3. Memorandum of Agreement documents are in place to describe the business management agreements between WRPS and other contractors for the performance and payment of services.
4. Interface agreements are in place, as necessary, to support formal commitments with other Hanford Site Prime Contractors. (Physical system interfaces are controlled via an Interface Control Document, while administrative interfaces are controlled via an Administrative Interface Agreement.)
5. Statements of Work are applied, as necessary, to define the scope, safety, quality, and technical requirements for services that are provided for a discrete transfer of funds.
6. The WRPS assessment program is implemented to monitor the effectiveness of the interface management processes and implementation of safety, environmental, radiological, and quality requirements stated in interface documents.

RESULTS

Conclusion Statement:

The mission and organizational structure that supports interface management to ensure identification, documentation, and communication was found to be adequate and effective at present time. A management assessment is scheduled to review the status of interface documents and validate previous gap analysis to ensure contractual commitments and interfaces are being addressed. There are no Findings or Observations for this objective.

Discussion:

Project Integration consists of five organizations with each having a unique function and responsibility. New to tank farms under the prime contract is Interface Management. The function of this organization is to develop documents that assist with the integration of Hanford Site requirements either shared or provided by new and existing prime contractors under the Department of Energy offices.

Intercompany work exchange agreements (ICWEA) are a subset of the documents that are used to describe services and material request between affiliates, prime contractors, and subcontractors performing work for Washington River Protection Solutions LLC (WRPS). Interface Management will manage the program that communicates, establishes policy and assist in the development of documents for prime contract interfaces points established by each of the respective prime contracts. These documents consist of Memorandum of Agreements (MOA), Interface Control Documents (ICDs), and Administrative Interface Agreements (AIA), while ICWEA documents (blanket master agreement (BMA), request for on-site services (ROS), statement of work (SOW), etc) are controlled and issued by the Procurement Services and Prime Contract.

The processes established under company policies, plans, and procedures require approvals and authorization of ICWEA prior to work commencing. TFC-PLN-102, *TOC Interface Management Plan* outlines the requirements in the Contract related to the Interface Management function and defines the execution/portfolio management strategy the TOC will apply to meet these requirements and support the line management projects. The implementing document for interface management is TFC-BSM-CP_CPR-C-17, *Interface Management.* Interface Management has recently completed the development and updates of prime contract MOAs. The process of developing other interface management documentation to implement formal commitment related to the cooperative transfer of material, energy, or data across company boundaries is on going and tracked by Interface Management.

The Interface Management plan and procedure outline the basic roles, responsibilities and process for the program and development of required documentation. As the program and process progress over the next six to twelve months, focus on areas such as program ownership, field implementation responsibilities, and contractor oversight will need to be

integrated. The roles listed in the plan for interface owner and associated point of contact (POC) will need to flow-down to the procedure level and may need expanding. Assessments, meetings, and issue tracking and resolution will provide feedback on where improvements could be needed in the future.

4.2 Functional Area: Subcontractor Management and Oversight / Objective #1

Objective:

Subcontract management and oversight activities are performed by knowledgeable WRPS personnel in accordance with well-defined and documented process expectations.

Criteria/Requirements:

1. Buyer Technical Representatives (BTRs) and Contract Requestors understand their subcontractor oversight roles and responsibilities, as follows:

    a. BTRs have completed the necessary training and qualification.
    b. BTRs provide technical direction/clarification to the subcontractor to ensure performance of all elements in accordance with the statement of work without placing emphasis on schedule or cost to the detriment of quality, safety, or the environment.
    c. BTRs provide internal coordination of, and interface with, the subcontractor regarding various technical requirements, such as the following:

        i. quality assurance
        ii. safety, health
        iii. Security and Emergency Services
        iv. protective forces
        v. environmental
        vi. Price-Anderson Amendments Act, and
        vii. ISMS principles applicable to the performance of the Contract pursuant to Tank Operations Contract implementing procedures.

2. For subcontracts, BTRs and Contract Requestors ensure subcontract personnel have training and qualifications commensurate with the responsibilities.
3. Roles and responsibility for personnel managing and performing the subcontractor oversight function are clearly established and are implemented effectively.

RESULTS

Conclusion Statement:

Functional leadership for, and knowledge of, personnel performing the subcontractor oversight function, and effective implementation of the subcontractor oversight expectations, are less than adequate. There are two Findings and six Observations for this objective.

Discussion:

Programmatic ownership and responsibility for success of the subcontract oversight function have not been established. Guiding Principle 1 of RPP-MP-003, *Integrated Environment, Safety, and Health Management System Description for the Tank Farm Operations Contractor*, establishes expectations for processes to provide clear roles and responsibilities. TFC-BSM-CP_CPR-C-05, *Procurement of Services* and TFC-ESHQ-S_SAF-C-07, *Subcontractor Oversight*, provide applicable roles and responsibilities for the tasks applicable to the procurement process and subcontractor management and oversight; however, the functional area managers for these procedures acknowledge only their specific functional roles and responsibilities in the overall process. This issue is identified as **Finding SO-F1**. In particular:

a. ISMS Guiding Principle 1 mandates that clear and unambiguous lines of authority and responsibility are established and maintained at all organizational levels. Though the relevant ESH&Q functional area managers confirmed ownership responsibility for their respective functional areas, an individual to serve as the collective management sponsor is not evident.
b. Though the Manager – Industrial Safety is the Functional Area Manager for the subcontract oversight procedure (TFC-ESHQ-S_SAF-C-07, *Subcontractor Oversight*) and the Manager – Procurement Services is responsible for the Buyer Technical Representative function to coordinate the development and implementation of subcontractor oversight plans, neither individual feels that they own or are responsible for success of the subcontractor oversight function.
c. 'Functional area manager' and 'document owner' responsibilities for the above procedure transitioned from the Quality Assurance organization to the Industrial Safety organization with revision B-4 in February 2008. An expectation that process ownership accompany the transfer of procedure ownership was not considered in the transition.
d. Though functional area manager responsibility for the above procedure has recently transitioned, the Manager – Quality Assurance Services remains responsible for the Subcontract Oversight form (Form A-6003-991).
e. PER 09-0166, issued January 27, 2009, discussed knowledge deficiencies encountered with several BTRs regarding the expectations for and implementation of subcontract oversight plans. This PER was categorized as PER/RES, and assigned to the Manager – Procurement Services.

Assessment activities have not been performed over the past several years to ensure that implementation of the subcontractor management and oversight process is achieving its desired objective. Core Function 5 (Provide Feedback and Continuous Improvement) of Integrated Safety Management as described in RPP-MP-003, *Integrated Environment, Safety, and Health Management System Description for the Tank Farm Operations Contractor*, establishes expectations for feedback and continuous process improvement. This issue is identified as **Finding SO-F2**. Contributing factors are as follows:

a. Comprehensive assessments of the subcontractor management and oversight process have not been performed in approximately nine years. Assessment activities have focused on identification and resolution of subcontract management and oversight issues in specific organizational areas, without performance of process assessments to identify and resolve the underlying issues.

    1. A series of subcontract management effectiveness assessments were performed in FY2002, but only one has been performed since (ref. FY-2007-SHQ-M-0135, *Subcontractor Oversight Process*, dated March 26, 2007, performed by the Quality Assurance organization). The one assessment report indicated an assessment of shallow scope and depth of the subcontractor oversight process.
    2. An independent Assessment of '*CH2M HILL Corporate Independent Assessment of CHG Hanford Tank Farm Activities* performed in December 2005 identified "There is no articulated strategy to describe how we approach subcontractor activity in the independent assessment program. ... This issue is relevant because of the heightened expectations from the DOE with respect to our responsibility for ensuring adequate performance of our subcontractors." This issue was supported by a recommendation that "The ESRB should determine if the company strategy to ensure adequate subcontractor oversight is adequately articulated and sufficiently comprehensive" (reference PER 06-0084). The closure documentation for this PER did not provide evidence that the recommendation was considered for action by the ESRB.
    3. An Independent Assessment of 'Procurement to Include Subcontractor Oversight' was planned for FY 2006, but was subsequently cancelled. This assessment was initially planned, in part, in response to PER 06-0084 (January 2006) recommending "The ESRB should determine if the company strategy to ensure adequate subcontractor oversight is adequately articulated and sufficiently comprehensive." Insufficient follow-through of this issue indicates a missed opportunity to preclude the current adverse trend.
    4. There are no further assessments planned in the subcontract management and oversight effectiveness topical area in FY2009.
    5. At the time of the assessment, there are no personnel in the Quality Assurance, Safety or Procurement line management teams qualified to lead Management or Specialty Assessment activities, via completion of Course # 350319, *Management Assessment Team Leader Qualification* or

Course # 357319, *Assessment Team Leader Requalification*. Though the Manager – Quality Services was previously qualified to lead assessment teams, the qualification expired on February 12, 2009. It is recognized that another member (non-management) of the Quality Services organization is presently qualified to lead assessment teams.

6. RPP-8411, *Washington River Protection Solutions Procurement Process Description* (co-approved by ORP) states "... ensure that every product or service purchased meets all necessary technical standards and requirements"; however, monitoring and evaluation of the procurement process are not implemented via implementation of self-assessment processes as discussed in the document to promote continuous improvement (reference sections 2.3, *Oversight and Compliance: Self-Assessment*, and 4.7, *Continuous Process Improvement*). In particular, expectations of section 5.6.1, *Managing Subcontractor Performance* to facilitate exemplary subcontract performance through monitoring of subcontractors to ensure ESH&Q program compliance are infrequently performed.
7. MOPs are not performed of the Subcontractor Oversight function as described in TFC-ESHQ-S_SAF-P-06, *Safety Assessments*. Attachment A (Safety and Health Program Functional Elements and Minimum Assessment Periodicity) identifies Subcontractor Oversight as a topic to be considered in development of the annual safety program assessments and MOP topics; however, review of MOP records in IDMS indicates there have been only two MOPs performed in this area over the past four years. The annual (fiscal year) schedule for Safety and Health program MOPS on topics in Attachment A, such as Subcontractor Oversight, has not been developed for FY2009 as described in Step 4.1 of the procedure. The issue of not scheduling safety MOPs to cover Subcontractor Oversight and other S&H areas is similar to the issue described in PER 08-0252.

b. Several Problem Evaluation Requests (approximately ten PERs) have identified ineffective implementation of subcontractor oversight plans, as identified during Management and Specialty Assessments. However, the corrective action plans associated with the relevant PERs have focused on the functional area responsible for the specific subcontract management and oversight plans, without communication to the process owners (e.g., presently, the Industrial Safety organization). Consequently, emergence of an adverse performance trend has not been identified of the subcontractor oversight process to enable focus on process implementation deficiencies.

c. Discussion with a Safety SME indicated they spend much more time reviewing documents in the office, (submittals, work packages, etc.) than performing field surveillances. The SME stated that not all time spent in the field is necessarily documented as a surveillance. Also, discussions with two SME's indicate they expect the BTR to bring a subcontractor oversight plan screening form to them to be signed or request it be developed, but they don't expect to have to initiate the

oversight screening form themselves. One interviewed SME, specifically asked if he was familiar with the new release of the Subcontractor Oversight procedure dated February 11, 2009 and his responsibility to develop the plan as indicated below, stated that he was not aware.

> 3.2 "Safety & Health, Environmental, Quality Assurance, and Radiological Controls personnel are jointly responsible for coordinating subcontractor oversight activities with the buyer's technical representative (BTR) as specified below. When required, they will develop a Subcontractor Oversight plan and provide it to the BTR and Procurement for transmittal to the Subcontractor."

Presently, for several (approximately 30) subcontracts/releases that apply to in-farm and design/build procurements, the assigned BTR is an administrative individual that does not possess technical knowledge and experience necessary to ensure that elements of the subcontract management and oversight process are implemented effectively. As an area for improvement, development and implementation of a qualification card process, especially of a dual qualification level to differentiate between administrative and technical procurements involving field work, would assist in ensuring that personnel assigned to perform the BTR function possess the requisite training and experience to perform the function effectively. This issue is identified as **Observation SO-O1**.

Personnel that perform the BTR function, when interviewed, stated that implementation of the BTR responsibilities frequently impose upon their normal position duties, and BTR responsibilities are not receiving an appropriate level of commitment. Consequently, decisions are made that result in less than adequate attention to BTR responsibilities. Presently, 36 personnel who are embedded in the line organizations perform the BTR function as a collateral duty. Administrative personnel performing the associated BTR functions appear motivated and interested in success of the subcontract management and oversight process, but sometimes do not recognize or provide challenge when process elements are not implemented in an effective manner (such as responsible functional area managers incorrectly concluding that oversight of field work was not needed). Interview results also indicated that the process knowledge and time commitment necessary to effectively perform BTR responsibilities are not receiving an appropriate level of commitment by most BTRs. As an area for improvement, development, staffing and implementation of a limited size core group of personnel to perform all BTR functions has potential to increase both efficiency and effectiveness of the BTR role. This issue is identified as **Observation SO-O2**.

The method and depth of training provided to BTRs is less than adequate to ensure that BTRs are fully trained to assume the functional roles and responsibilities. BTRs frequently cited a desire for additional training. Document reviews and interviews conducted determined training and awareness of Buyer Technical Representatives regarding their functional roles and responsibilities for subcontractor oversight are less than adequate. This issue is identified as **Observation SO-O3**. For example:

a. Several BTRs stated that they were not aware of the BTR role in subcontractor oversight. Previous assessments found additional examples of BTRs stating that they had no knowledge of TFC-ESHQ-S_SAF-C-07, *Subcontractor Oversight* or the use of Form A-6003-991 (Subcontractor Oversight Plan) to determine the need for oversight of subcontractors.
b. Contributing to this knowledge weakness is discontinuation of a continuing training activity for BTRs that was removed in February 2008. Consequently, personnel performing BTR responsibilities are not provided with continuing training opportunities to maintain proficiency as BTRs.
c. Recent revisions to TFC-BSM-CP_CPR-C-05 that impacted BTR roles specified "Training will be provided to BTRs in their quarterly update"; however, as noted above, quarterly updates have not been provided since 2008.
d. When interviewed, presently active BTRs stated that they would welcome the concept of continuing training. Course #350246, *Buyer Technical Representative Upgrade Class* is the training provided to authorized BTRs; 130 current WRPS personnel have completed Course #350246, *Buyer Technical Representative Upgrade Class* since calendar year 2001, of which 72 are authorized to perform BTR responsibilities, of which 36 are actively performing BTR responsibilities.
e. The procedure for subcontractor oversight provides no delineation between the types of subcontracts (e.g., administrative procurement activities, rather than procurement activities involving field work, though staff augmentation procurements are excluded) and provides no guidance for determining or developing the level or type of subcontractor oversight that might be appropriate for a given type of subcontract, i.e. design, construction, etc. Consequently, BTR knowledge and awareness of subcontractor oversight expectations is entirely dependent upon the BTR's technical knowledge and experience.
f. Increased familiarization with Passport was cited by most BTRs as a desired training activity. In addition, several authorized (but inactive) BTRs are not authorized to access Passport; subsequently, their ability to effectively perform the BTR function is significantly minimized should this support be needed.

Personnel performing Buyer Technical Representative (BTR) responsibilities achieve authorization to perform the function, and are listed on the Procurement web site; however, there is no requirement to receive re-authorization if personnel have not recently performed BTR responsibilities. Consequently, personnel performing BTR responsibilities do not maintain proficiency as BTRs, and are not made aware of changes to BTR processes and expectations or to changes in the procurement process. As an area for improvement, re-authorization of personnel performing BTR responsibilities should be considered (e.g., BTR function authorization removed) if they have not actively performed BTR responsibilities within a specified period of time. This issue is identified as **Observation SO-O4**.

The *Training Implementation Matrix per DOE Order 5480.20A* dated September 2005 needs to be revised to reflect the correct 'Compliance Reference' for 'Subcontractor Personnel Qualification'. Specifically, Table 2 (General Requirements Matrix), Chapter 1 (General Requirements), Section 3 (Subcontractor Personnel Qualification) references the compliance reference document as TFC-BSM-CP_CPR-C-03, *Buyer's Technical Representative Process*; however, this procedure was cancelled in April 2007, with the key elements incorporated into TFC-BSM-CP_CPR-C-05, *Procurement of Services*. Discussion with the Training Manager identified that the need for a revision to the Training Implementation Matrix has been identified and is in progress, including removal of the above reference. This issue is identified as **Observation SO-O5**.

A comprehensive assessment of the integration, procedural direction, and implementation of the WRPS procurement processes has not been performed since calendar year 2002. As an improvement opportunity, performance of an assessment in this area should be considered, to include interface management with the prime contractors and affiliates within the assessment scope. This issue is identified as **Observation SO-O6**.

4.3 Functional Area: Subcontractor Management and Oversight / Objective #2

Objective:

Subcontractor management and oversight activities are supported by effective flow-down of requirements to the subcontractors.

Criteria/Requirements:

1. General site and project-specific safety, health, radiological, environmental, and quality requirements are included in contracts and statements of work, including the following as flowed down through the procurement process to subcontractors:

    a. The Tank Operations Contractor (TOC) Health and Safety Plan (HASP) and the Price Anderson Amendment Act reporting responsibility is applicable to subcontractors who may be involved in tank farm work activities such as design, construction, operation, maintenance, decontamination, decommissioning, and environmental restoration activities.
    b. The medical contractor is responsible for scheduling employees and the employees of contractors, and lower-tier subcontractors for medical qualification examinations and medical monitoring based on the data provided through the EJTA. Results of medical examinations and monitoring are reported to employees, employees of contractors and lower-tier subcontractors, and their respective managers or supervisors. The medical contractor is responsible for maintaining medical records in accordance with the applicable OSHA and DOE requirements.

c. The Chemical Management Plan is relevant to subcontractors involved in the management of hazardous materials.
d. Processes are used to communicate hazardous material information to all personnel who work with hazardous materials during any activity in the tank farms.
e. Construction subcontractors are required to implement the TOC worker safety and health plan (WSHP). The scope, technical complexity, and risk of the construction activity determines the applicable state and federal requirements, as well as the TOC safety procedures, work planning process, and field oversight required.
f. As detailed in HNF-MP-5184 (*Washington River Protection Solutions Radiation Protection Program*) requirements contained in 10 CFR Part 835 are invoked to establish radiation protection standards, limits, and program requirements for protecting individuals from ionizing radiation.
g. The *Washington River Protection Solutions (WRPS) On-Site Work Provisions* elements are invoked, to include the following:

    i. Required Notifications
    ii. Investigation Support
    iii. Reporting and Record Keeping
    iv. Site-wide Qualification and Training
    v. Site Deliveries
    vi. Security
    vii. Medical Evaluations
    viii. Radiation Protection
    ix. Emergency Management
    x. Workplace Substance Abuse Programs
    xi. Whistleblower Protection

2. Subcontractor oversight activities consider reporting of non-compliances to 10CFR851 and PAAA.

RESULTS

Conclusion Statement:

The objective and organizational structure that supports effective flow-down of requirements to the subcontractors was found to be adequate and effective. There are no Findings or Observations for this objective.

Discussion:

TFC-BSM-CP_CPR-C-05, *Procurement of Services*, and TFC-BSM-CP_CPR-C-06, *Procurement of Items (Materials)* ensure that the WRPS contract requirements receive

appropriate flow-down to subcontractors. The responsibility to implement requirements flow down lies with the Buyers Technical Representative (BTR) as described in TFC-BSM_CPR-C-05 which identifies the BTR as responsible to ensure deliverables and requirements are clearly defined. BTRs ensure company policies, procedures, and ISMS flow-down, and Safety, Procurement and Quality Assurance requirements are communicated to subcontractors and incorporated into their work efforts. BTRs are the authorized communication link between WRPS technical staff and the subcontractor to clarify questions, procedures, establish priorities, authorize overtime/accelerate progress and processes. BTRs work in concert with procurement specialists to develop new subcontracts and modify existing subcontracts to reflect changing scope and/or field conditions. Specific applications of this responsibility are contained in Section 4.0.

Document reviews and interviews determined that the flow-down of WRPS applicable contract requirements are usually listed in both blanket master agreements and statements of work for subcontractor activities Several minor examples of ineffective requirements flow-down were noted that were judged to have no significant impact. Several assessors evaluated the BMAs and SOWs developed by different contract requestors and BTRs and found no issues. Examples: Review of construction requisition 182095 and SOW; Requisition 00176418, *C-104 Engineering Design Support* and Contract Requisition 00180390; and *241-C-110 Waste Retrieval Systems Installation*. The TOC HASP and PAAA responsibilities are flowed down to the subcontractor as are requirements for a Chemical Management Plan, On-Site Work Provisions, and applicability to 10 CFR 851.

4.4 Functional Area: Subcontractor Management and Oversight / Objective #3

Objective:

Subcontractor management and oversight activities are supported by periodic interface with responsible subcontractor personnel, including observations of in-progress field work, corrective action management, records management, and notification and reporting.

Criteria/Requirements:

1. Subcontractor Oversight Plans are in place for all activities identified on the Subcontractor Oversight Plan screening forms, with the screening form results located in the Buyer Technical Representative (BTR) files.
2. Subcontractor oversight activities are captured on the integrated assessment schedule or project schedule, as appropriate (e.g., progress meeting participation, Management Observation Program (MOP) conduct, periodic monitoring of performance).
3. Oversight files are maintained for each subcontractor to document oversight activities and responses to any findings and issues.
4. Subcontractor Oversight Plans are maintained as quality records.

5. Subcontractor performance evaluation history files are reviewed by BTRs, as necessary, to ensure that opportunities to bid for work are provided to quality performers.
6. Findings and issues resulting from subcontractor oversight activities receive appropriate corrective actions that prevent recurrence.
7. The WRPS assessment process is applied to evaluate oversight of subcontractor performance, including hands-on work and field implementation of administrative and technical procedures and involve workers, supervisors, and managers.
8. Subcontractor oversight activities consider subcontractor knowledge of 10CFR851 requirements (such as worker rights, posting of worker rights, etc,).
9. Subcontractor oversight activities consider the effectiveness of reporting of non-compliances to 10CFR851 and PAAA.

Results

Conclusion Statement:

The objective and organizational structure that supports implementation of periodic interface with responsible subcontractor personnel, including observations of in-progress field work, corrective action management, records management, and notification and reporting was found to be less than adequate. There are three Findings and six Observations for this objective.

Discussion:

As detailed in this section, several issues were identified relating to implementation of subcontract oversight expectations. Contributing to these issues is inconsistent interpretations as to what constitutes a satisfactory subcontractor oversight plan. For example, interview results revealed the following interpretations:

a.) Completion of section II of the Subcontractor Oversight Plan form (Form A-6003-991, *Subcontractor Oversight Plan*) that identifies necessary oversight activities.
b.) Development of specific subcontractor oversight criteria that are to be implemented to support item a., and
c.) Generation of a detailed subcontractor oversight plan that is scheduled and implemented on a pre-determined frequency.

Subcontractor Oversight Plan (screening) forms (Form A-6003-991) have not been developed, or have been completed incorrectly, for many subcontracts as required in TFC-ESHQ-S_SAF-C-07, *Subcontractor Oversight*. Consequently, BTR coordination actions to ensure that subcontractor oversight coordination activities are defined and implemented are frequently not provided. This issue is identified as **Finding SO-F3**. It is recognized that considerable field oversight is performed, particularly in the industrial

safety area; however, there is no assurance that these oversight activities effectively support subcontract management and oversight. The following examples support the finding:

a. Many subcontracts/releases (15 of 34 based upon a sample by the assessment team) have not been screened to determine whether subcontractor oversight plans are necessary.
b. Subcontract oversight screening activities indicate a need for oversight of field activities for only 36 of 55 subcontracts involving field work (65%, as of February 2009), based upon a sample review by the Safety organization. Consequently, subcontract oversight plans and schedules have frequently not been implemented for subcontracts involving field work activities.
c. Feedback received during the assessment indicated that some personnel responsible for BTR activities incorrectly believed that subcontract activities implemented via the WRPS work control system did not require development of Subcontractor Oversight Plans.
d. In one instance, the 'subcontract oversight' function understanding by the responsible BTR was to review contractor invoices for budget and scope impact, rather than ESH&Q oversight of subcontractor activities.
e. Article 2.0 (Integration of Environment, Safety, Health and Quality (ESH&Q) Into Work Planning and Execution), Item 2.1.11 (General) of the WRPS On-Site Work Provisions states "Open and effective communication shall exist between the SUBCONTRACTOR and the Buyer's Technical Representative (BTR) to support the management of ESH&Q issues and initiatives." Though several BTRs were aware of this clause, they did not interpret the clause to encompass subcontract management and oversight.

Subcontractor oversight activities are not performed by the Environmental Programs organization as required by RPP-MP-003, *Integrated Environment, Safety, and Health Management System Description for the Tank Operations Contractor*, and TFC-ESHQ-S_SAF-C-07, *Subcontractor Oversight*. Consequently, Environmental Compliance personnel do not implement necessary environmental field activities. Current Environmental Surveillance checklists do not identify subcontractor oversight as within scope of Tank Farm facilities. This issue is identified as **Finding SO-F4**.

TFC-BSM-CP_CPR-C-05, *Procurement of Services*, establishes the process for which subcontractor oversight is identified through the development of procurement documents such as the Blanket Master Agreement (BMA) and Statement of Work (SOW). Several Contract Requisitions were noted to not identify subject matter experts (SMEs) in functional areas impacted by the work scope (e.g., Radiological Control, Environmental Programs, and Quality Assurance). TFC-BSM-CP_CPR-C-05, *Procurement of Services*, Section 4.3 Creating and Approving the Statement of Work requires involvement of SME and others, along with Attachment C of the procedure which functions as the tool the BTR can use. Improper approval routing misses the opportunity to ensure proper requirements are flowed down to the subcontractor via the Statement of Work. TFC-BSM-CP_CPR-C-05 provides a useful tool to identify necessary review and approval

SMEs on a 'Determination of Required Approvals' checklist; however, the Buyer Technical Representative and Contract Requestor incorrectly completed the checklist in several instances, resulting in a conclusion that SME approval of relevant Statements of Work was not necessary. This issue is identified as **Finding SO-F5**. Of ten Requisitions reviewed, five with potential ESH&Q impact (e.g., radioactive waste disposal activities, tank farm entries to support inspections) did not contain appropriate approvals. One example of not involving a relevant SME in the Statement of Work approval process (Radiological Control, reference Requisition 00182095) was identified recently in PER 09-0338 (task releases had not yet been issued on this Requisition). The four additional Requisitions are as follows:

Contract Number/ Requisition Number	Contract Scope	Relevant Functional Area SMEs Not Included in SOW Approval
36572 / 00175072	Tank Farm Inspection Services	Radiological Control
28005 / 00178835	ATL Hazardous Waste Treatment/ Disposal	Quality Assurance
28005 / 00178837	Tank Farm Hazardous Waste Treatment/ Disposal	Quality Assurance
36437 / 00176764	PNNL Support for ILAW Glass Testing	Radiological Control Environmental

There is little objective evidence of Environmental, Safety, or Radiological Control oversight being performed either as specific subcontractor oversight or as management observation program (MOP) walk downs or safety surveillances. Interviews with subcontractor staff at the ATCO shop and Vadose Zone project work indicated little presence by environmental, safety or radiological control staff performing oversight activities. A field walk-down of the ATCO shop by the assessment team on February 26, 2009 identified several instances of poor housekeeping. A contributing factor was that requirements for daily safety inspections had not been flowed down to construction subcontracts, though the Construction subcontractor safety professionals do perform safety inspections. When the ATCO shop storage conditions were observed by the assessment team, prompt action was taken by a WRPS safety professional in attendance and action was taken to capture this issue in the corrective action program (reference PER 09-0355). As described in the PER, contributing to the issue was that requirements for daily safety inspections had not been flowed down to construction subcontracts, though the Construction subcontractor safety professionals do perform safety inspections.

Subcontractor oversight expectations are developed and implemented through coordination with the BTR, contract requestor, and SME, and support by ESHQ SMEs to conduct the required oversight. Interviews and document reviews identified several subcontractor oversight plans indicating that planned oversight would consist of routine functional area surveillance activities already in place, with no specificity as to the relevant contract/release. Consequently, there is no assurance that the planned oversight activities would consider elements of the contract/release that may require oversight scope of a specialized nature, nor is there assurance that the specific subcontracts received the planned oversight. This issue is identified as **Observation SO-O7**. Though a considerable amount of field oversight activity is evident, particularly in the industrial safety area, it is virtually impossible to correlate the actual field work activities to specific subcontractor field activities.

Observation indicated the ATCO shop is presently in use by construction subcontractors, but there is no evidence of a "Formal Turnover" of the facility from WRPS to the subcontractor in accordance with the provisions of the Statement of Work (SOW) (reference Contract Requisition 00180390, *241-C-110 Waste Retrieval Systems Installation*). This issue is identified as **Observation SO-O8**. A review of the SOW finds the SOW vague regarding expectations the facilities being turned over to the subcontractors for work. If item 1.1 of the following text of the SOW is in need of revision, the revision should be processed:

Company Facilities

1.1 When the Company provides onsite facilities (i.e., office/administrative, storage, shop facilities and/or lavatory/sanitary facilities) and furnishings (i.e., refrigerators, stoves, microwaves, furniture), the Company will formally turnover the facility(ies) and furnishings to the Contractor.

The WRPS ESH&Q organization is responsible to provide subcontractor management support to the BTR by 1) communicating requirements, and 2) performing assessments, inspections, and/or surveillances to ensure compliance as discussed in TFC-ESHQ-S_SAF-C 07, *Subcontractor Oversight*. Success of the subcontractor oversight process is based upon the BTR, contractor requestor, and SME working together to ensure that subcontractor oversight is performed as needed and is performed effectively. Actions to screen subcontracts to determine the need for subcontractor oversight and to develop subcontractor oversight plans are performed as post-subcontract award activities via completion of the Subcontractor Oversight Screening form (Form A-6003-991). As an area for improvement, completion of the need for subcontractor oversight (via the subcontract oversight screening form completion) should be considered as a pre-award activity. Should the need for a revision to subcontract oversight be identified, particularly the scope and frequency of subcontractor oversight, a revision to the screening determination could be readily accommodated. If the decision is to retain the post-award determination, a time period following award needs to be specific to direct when the oversight screening activity should be completed. This issue is identified as **Observation SO-O9**.

Evaluation of Subcontractor Performance evaluations are not performed for some subcontracts that roll over year-to-year. Three interviewed BTRs with relevant contracts/releases confirmed that they do not complete the *Evaluation of Subcontractor Performance* evaluations at the end of the fiscal year. Since the contracts potentially never end, there is no trigger to perform this closure activity described in step 4.4 (Closure Oversight Activities) of TFC-ESHQ-S_SAF-C-07, *Subcontractor Oversight.* Consequently, evaluation documentation does not exist to support future subcontract choice considerations. Three interviewed BTRs with relevant contracts/releases confirmed that they do not complete the *Evaluation of Subcontractor Performance* evaluations at the end of the fiscal year. As an improvement opportunity, these evaluations should be completed at the Release level, rather than at the Subcontract level, since Releases are issued at least each year. This issue is identified as **Observation SO-O10**.

Several areas of improvement were identified for the Subcontractor Oversight Form (Form A-6003-991) to strengthen the determination process for subcontractor oversight (this issue is identified as **Observation SO-O11**):

a. To maintain process integrity, a suggested improvement opportunity is to implement one or both of the following recommendations:

    i. Require each of these functional area managers to concur with the screening results by signing in Section I (Oversight Plan Screening) of the form.
    ii. Provide concurrence ability in Passport for each of these managers regarding the need for subcontractor oversight plans in their respective functional area.

b. Section I of the Subcontractor Oversight Plan form should be modified to add a 'Yes/No' determination to the question "Does the work activity involve field work?", which should require increased ESH&Q scrutiny.

c. Sections I and II of the Subcontractor Oversight Plan form should be modified to require Form A-6003-991 to be attached to the Passport Comm Log when completed.

d. Section II of the Subcontractor Oversight Plan form requiring approval signatures by the relevant ESH&Q managers should be changed to require both the Manager – Industrial Safety and the Manager – Industrial Hygiene to approve, since subcontractor oversight plans may be required in one of these areas but not the other.

TFC-ESHQ-S_SAF-C-07, *Subcontractor Oversight* does not provide recommended subcontractor oversight frequency or depth of review. Some checklist considerations for scope are provided in Attachments A through D of the procedure for Safety and Health,

Radiological Control, Environmental and Quality Assurance, respectively; however, considerations such as prior site work by the subcontractor, the detailed nature of the work (especially for field activities), and potential vulnerability should the work not be performed safely and as planned should be considered when determining the oversight frequency and depth. This issue is identified as **Observation SO-O12**.

4.5 Functional Area: Document Control

Objective:

WRPS activities ensure that specified documents, either in hard copy or electronic media, including latest changes thereto, are controlled, reviewed for adequacy, approved for release, and distributed to and used at the location where the work is being performed.

Criteria/Requirements:

1. The following controls shall be applied to documents and changes thereto:

    - The identification of controlled documents
    - The specified distribution of controlled documents for use at the appropriate location
    - The identification of individuals responsible for the preparation, review, approval, and distribution of controlled documents
    - The review of controlled documents for completeness and approval prior to distribution, and a method to ensure the correct documents are being used.

2. Changes to documents, except minor changes, shall be reviewed and approved by the same organizations or technical disciplines that performed the original review and approval, unless other organizations (those affected by the change) are specifically designated.
3. The individuals reviewing document changes shall have access to pertinent document background data or information upon which to base their review and approval.
4. Minor changes to documents, such as inconsequential editorial corrections, shall not require that the revised documents receive the same review and approval as the original documents. The following are considered editorial changes:

    - Correcting grammar or spelling
    - Renumbering sections or attachments that do not affect the sequence of work
    - Changing the title or number of the document and updating organizational titles.

5. To avoid a possible omission of a required review, the type of minor changes that do not require such a review and approval, and the person who can authorize such a decision, shall be clearly delineated.

RESULTS

Conclusions/Summary:

The objective and organizational structure that supports document control either in hard copy or electronic media, including latest changes thereto, are controlled, reviewed for adequacy, approved for release, and distributed to and used at the location where the work is being performed was found to be adequate. Several improvement opportunities were identified to increase process efficiency and effectiveness. There are no Findings and three Observations for this objective.

Discussion:

TFC-PLN-02, *Quality Assurance Program Description*, Section 6.0 – Document Control was part of the CRAD for the assessment. Document changes of company procedures are under TFC-MD-061, *Transition of CH2M HILL Procedures and Administrative Documents to Washington River Protection Solutions* authorizing change for those procedures and administrative documents that require administrative changes to reflect the new contractual relationship between the TOC and the U.S. Department of Energy ORP.

Procedures that support the subcontractor oversight function provide several instances of conflicting direction. This issue is identified as **Observation SO-13**. In particular, TFC-ESHQ-S_SAF-C-07, *Subcontractor Oversight*, TFC-BSM-CP_CPR-C-05, *Procurement of Services* and TFC-BSM_CP_CPR-P-05, *Subcontract Closeout* are not well integrated to ensure that Buyer Technical Representatives, Contract Requestors and ESH&Q managers can perform their roles and responsibilities effectively and efficiently. For example:

a. Step 4.5 (Closure Oversight Activities) of TFC-ESHQ-S_SAF-C-07, *Subcontractor Oversight*, requires the Buyer Technical Representative and the Safety and Health, Environmental, Radiological Controls and Quality Assurance representatives to "Participate in/provide input to the subcontractor Evaluation of Subcontractor Performance." However, step 4.7 (Subcontract Closeout) of TFC-ESHQ-S_SAF-C-07 states to "Obtain input from the project team and complete the Evaluation of Subcontractor Performance for subcontracts/releases greater than $100K." In effect, conflicting direction exists for subcontracts/releases that are less than or equal to $100K. Also, the wording in TFC-BSM-CP_CPR-C-05, *Procurement of Services*, provides ambiguous direction for releases of a subcontract that individually would equal less than $100K but would result in a subcontract totaling greater than $100K.

b. Step 4.6 (Subcontractor Oversight Plan Changes) of TFC-ESHQ-S_SAF-C-07 requires the Buyer Technical Representative to "Maintain the subcontractor oversight plan in the BTR's file for the subcontractor.", with the Records Custodian identified as the "Contract Originator and/or assigned Buyer Technical Representative". However, TFC-BSM-CP_CPR-C-05 does not provide BTR file disposition direction; it states in Section 6.0 (Records) that the Records Custodian for "routine procurement files" is "Procurement".
c. Section 6.0 (Records) of TFC-ESHQ-S_SAF-C-07 identifies Subcontractor Oversight Plans as quality records. However, Section 6.0 (Records) of TFC-BSM-CP_CPR-C-05 identifies "routine procurement files" as non-quality records. If Subcontractor Oversight Plans are considered to be "routine procurement files", this direction is in conflict. If Subcontractor Oversight Plans are not considered to be "routine procurement files", there are no record requirements identified.
d. Step 4.7.3 (Subcontract Closeout) of TFC-BSM-CP_CPR-C-05 requires completion of the Evaluation of Subcontractor Performance form with accompanying "Evaluation Instructions". The Evaluation Instructions do not correlate to the Evaluation of Subcontractor Performance form contents. Also, configuration control should be implemented by processing the Evaluation of Subcontractor Performance form as a site form.
e. Step 4.5.1 of TFC-ESHQ-S_SAF-C-07 requires the BTR and ESH&Q personnel to "Participate in/provide input to the subcontractor Evaluation of Subcontractor Performance"; the procedure does not direct that the Evaluation of Subcontractor Performance be provided to the Procurement Specialist. Step 4.1.3 of TFC-BSM_CP_CPR-P-05, *Subcontract Closeout*, requires the Procurement Specialist to "Include copy of Evaluation of Subcontractor Performance in procurement file <u>if received</u> from BTR or Procurement Support". By default, the Evaluation of Subcontractor Performance would not be filed if not received.

TFC-BSM-CP_CPR-C-05, *Procurement of Services* is unclear as to whether documents identified in the procedure are to be treated as record material. This issue is identified as **Observation SO-14**. For instance:

a. Determination of Required Approval (DRA) forms provide no signature line (as expected for a record document); also, the form is not listed in section 6.0 (Records), but it is to be attached to the 'Passport Comm Log'.
b. The Workplace Substance Abuse Program (WSAP) form provides a signature line for the BTR, but then indicates "Original in BTR File" in that signature area. The procedure also instructs the BTR to attach the WSAP to Passport. Section 6.0 (Records) states that the Procurement Services organization is the records custodian for procurement files. It is not evident why a separate "BTR File" is needed, and why one copy goes into the Passport Comm Log and one into the BTR file.

c. Section 6.0 (Records) does not clearly indicate what items are records and where they are maintained as records. Is Procurement using Passport for records storage? Can a BTR use Passport for their "BTR file"?

During preparation activities for this assessment, a recent revision to TFC-ESHQ-S_SAF-C-07, *Subcontractor Oversight* Rev B-6, issued February 11, 2009 was found to have been processed incorrectly. The issue was captured in PER 09-0246 with the text as follows:

> Type of Procedure Change - Changes were made to this procedure regarding responsibilities for subcontractor oversight; however, the ADCA indicates this is a "minor revision". Changes made are beyond the scope of a "minor revision" as defined in the QAPD. TFC-PLN-02, *Quality Assurance Program Description*, defines a "minor change" as follows:
>
> > Minor changes to documents, such as inconsequential editorial corrections, do not require that the revised documents receive the same review and approval as the original documents. The following are considered editorial changes:
> >
> > 1) Correcting grammar or spelling
> > 2) Renumbering sections or attachments that do not affect the sequence of work
> > 3) Changing the title or number of the document
> > 4) Updating organizational titles.
> >
> > Training - The ADCA was completed to indicate "Classroom Training without Verification" would be given. However, this procedure was issued and effective February 11, 2009 without training provided to BTRs.
> >
> > Impacted Procedures - This procedure interfaces with TFC-BSM-CP_CPR-C-05, *Procurement Of Services*, and Form A-6003-991 (*Subcontractor Oversight Plan*). The ADCA did not indicate there were any impacted procedures, yet the changes would seem to require similar changes to the Procurement of Services procedure and possibly Form A-6003-991.

TFC-ESHQ-S_IH-C-02, *Hazard Communication*, provides an expectation to provide updated Right-to-know (RTK) information within 30-days of receipt of a new hazardous material. During this assessment, the RTK station supporting the recently re-occupied ATCO building was identified as having outdated RTK information. Follow up provided verbal input that "new inventory sheets are being worked on"; however, good business practice would provide for issuance of updated RTK information prior to building re-occupancy. A previous weakness with RTK information not being in place at several work areas/facilities was identified in PER 08-1312 (categorized as a PER/RES, identified during the 10CFR851 Worker Safety and Health Independent Assessment in

June 2008). Corrective action did not provide an extent-of-condition evaluation of other facilities, such as the ATCO shop, but instead focused on evaluation of migration to a paperless system.

TFC-ESHQ-ENV_AP-D-01, *Environmental Oversight of Subcontractors*, was cancelled in June 2006; however, the document is still listed as a company level guidance document in TFC-PLN-73, *Environmental Protection and Compliance Plan*, and should be replaced with TFC-ESHQ-S_SAF-C-07, *Subcontractor Oversight*. This issue is identified as **Observation SO-O15**.

4.6 Functional Area: Records Management

Objective:

WRPS activities ensure that the requirements for the generation, classification, storage, and maintenance of documents designated as quality assurance (QA) records are implemented.

Criteria/Requirements:

1. Records shall be identified, generated, authenticated, maintained, and their final disposition specified. Requirements and responsibilities for these activities shall be documented.
2. Requirements and responsibilities for record transmittal, distribution, retention, maintenance, and disposition shall be established and documented.
3. Records shall be distributed, handled, and controlled in accordance with written procedures.
4. Records shall be traceable to associated items and activities and accurately reflect the work accomplished or information required.
5. Individuals handling records shall protect them from damage, determination, or loss until the records are submitted to the records management system.
6. Records shall be stored in facilities, containers, or a combination thereof, constructed and maintained in a manner which minimizes the risk of damage or destruction.

RESULTS

Conclusions/Summary:

The objective that supports records management for the generation, classification, storage, and maintenance of documents designated as quality assurance (QA) records was found to generally be adequate. There is one Finding and one Observation for this objective.

Discussion:

Record retention requirements for Subcontractor Oversight Plan (screening) forms (Form A-6003-991) and scheduling requirements for subcontractor oversight activities are not implemented as described in TFC-ESHQ-S_SAF-C-07, *Subcontractor Oversight*. This issue is identified as **Finding SO-F6**. Specifically:

a. Section 6 (Records) of TFC-ESHQ-S_SAF-C-07 identifies that Subcontractor Oversight Plan (screening) forms (Form A-6003-991) are to be maintained as quality records. Interviewed Buyer Technical Representatives, responsible to implement the record retention were not aware of the quality record expectation. Contributing to this issue is an absence of direction within the procedure to implement the record retention requirement.

b. Step 4.2.3 (Post-Award Oversight Activities) of TFC-ESHQ-S_SAF-C-07 requires subcontractor oversight activities to be placed on the (WRPS) integrated assessment schedule or project schedules. Though subcontractor oversight activities are sometimes scheduled on department-level schedules, use of the integrated assessment schedule or project schedules is not implemented. As a suggested corrective action, the scheduling procedure requirement should provide increased flexibility as to the schedule means, allowing use of department schedules or tracked as E-STARS Tasks.

Passport is not recognized as a document 'record' database. TFC-BSM-IRM_DC-C-02, *Records Management*, recognizes documents maintained as records in approved TFC Records Storage Areas (RSAs), the Document Service Centers (DSCs), the Records Holding Areas (RHA), or electronically stored in the Integrated Document Management System (IDMS), but is silent on the Passport database. TFC-BSM-IRM_DC-C-02 should clearly indicate the status of Passport regarding records retention. Interviews with procurement personnel determined that Passport retains information that may be considered to be record material. This issue is identified as **Observation SO-O16**.

ATTACHMENT A
PERSONNEL CONTACTED

Name	Title	Interview	Entrance Meeting	Exit Meeting
Anderson, CE	Technical Specialist, Security & Emergency Services/Events Investigation (PAAA), ESH&Q		X	X
Armstead, M	Manager – Prime Contracts, Business Operations	X		
Beranek, F	Manager – ESH&Q	X		X
Berman, HS	Manager - Engineering		X	
Bowman, TA	Operations Support Specialist, Safety & Health, ESH&Q	X		
Brown, RL	Performance Assurance/Corrective Action, ESH&Q		X	X
Burt, DL	Manager - EVMS Cert & Assurance, Project Integration	X		
Butler, RE	Safety URSWA, Construction and Commissioning, Project Integration	X		
Calderon, LM	Technical Specialist, Industrial Safety, Safety & Health, ESH&Q	X		X
Colosi, KA	Manager - IHLW Program, WTP Support	X		
Conrad, JS	Environmental Specialist, Environmental programs, ESH&Q	X		
Farner, ML	Construction and Commissioning, Project Integration			X
Flasch, MP	Performance Assurance/Corrective Action, ESH&Q		X	X
Flowers, LA	Safety Specialist – IS/IH, ESH&Q Business Operations, Base Operations	X		
Gaydosh, WL	Manager – Industrial Safety, ESH&Q	X		
Hatcher, KA	Manager – Procurement Services, Business Operations	X		
Janecke, JR	Procurement Specialist, Procurement Services, Business Operations	X	X	
Keith, LJ	Manager – Training, Workforce Resources	X		
Kubie, DL	Training Specialist, Training, Workforce Resources		X	
Kummer, DA	Training Specialist, Training, Workforce Resources	X		
Le, TM	Health Physicist, Radiological Controls, ESH&Q	X		
Lepka, SJ	Administrative Specialist - Project Controls, WTP Support	X		

ATTACHMENT A
PERSONNEL CONTACTED

Name	Title	Interview	Entrance Meeting	Exit Meeting
Lesko, AC	Manager - Records & Document Control, Business Operations	X		
Lesko, KF	Manager – Construction and Commissioning, Project Integration	X	X	
Lindholm, MA	Manager – SST Retrieval and Closure		X	
Maciuca, C	Manager – Performance Assurance/Corrective Action, ESH&Q		X	
Marshall, D	Accountant, Finance, Business Operations	X		
Martin, LK	Operations Specialist, Project Construction, Base Operations	X		X
May, SM	Project Cost Analyst, Project Controls, SST Retrieval and Closure	X		
McElroy, ML	Manager – Quality Assurance Services, ESH&Q	X		X
McLellan, GW	Manager - Project Management Systems, Project Integration	X		
Meyers, S	EFSI, Quality Assurance	X		
Netolicky, RA	Quality Assurance Engineer, Quality Assurance Services, ESH&Q	X		
Penick, LR	Operations Support Specialist, Performance Assurance/Corrective Action, ESH&Q	X	X	X
Peters, NL	Technical Specialist, Security & Emergency Services/Events Investigation, ESH&Q	X		
Powers, MJ	Safety Specialist, Safety/IH, ESH&Q Single-Shell Tank, SST Retrieval & Closure	X		
Reynolds, KD	EFSI, Sampling And Well Services	X		
Robinson, JM	Manager – Procurement Services, Business Operations	X	X	
Rolph, JT	Manager – Radiological Controls, ESH&Q	X		
Sax, SM	Manager – Project Operations		X	
Schaleger, JP	Safety Specialist, Industrial Safety, ESH&Q	X		
Silvia, MJ	Performance Assurance/Corrective Action, ESH&Q		X	X
Stickney, RG	Engineer, Central Design Authority and Standards, Engineering	X		
Stredwick, JR	Construction and Commissioning, Project Integration	X		

ATTACHMENT A
PERSONNEL CONTACTED

Name	Title	Interview	Entrance Meeting	Exit Meeting
Sydnor, H	Scientist, Operations Support – Vadose, SST Retrieval & Closure	X		
Taber, TK	Operations Support Specialist, Industrial Safety, ESH&Q	X		
Tifft, SR	Environmental Specialist, Environmental Compliance, ESH&Q	X		
Vacca, JE	Manager – Information Resources, Business Operations	X		
Van Meighem, JS	Technical Specialist – Interface Management, Project Integration	X		
Voogd, JA	Manager - Environmental Compliance, ESH&Q	X		
Wooley, TA	Environmental Specialist, Environmental Compliance, ESH&Q	X		
Zane, RW	Energy Solutions, Industrial Safety	X		

ATTACHMENT B
DOCUMENTS REVIEWED

- DOE Order 414.1C, *Quality Assurance*, approved 06-17-05
- 10CFR830, Subpart A, *Quality Assurance Requirements*
- INPO 05-002, *Human Performance Tools for Engineers – Practices for Anticipating, Preventing, and Catching Engineering Errors* (Vendor Oversight section)
- WRPS Contract DE-AC27-08RV14800, Modification No. M009, Section B, *Supplies or Services and Prices/Costs* and Section J-6, *Small Business Subcontracting Plan*
- Administrative Interface Agreement for Training Records Under Memorandum of Agreement No. CHG-FMOA-2001
- Interface Control Document between The Tank Farm Contractor and the Fluor Hanford Water Utilities Distribution System
- Washington River Protection Solutions LLC and Energy Solutions Federal Services LLC Affiliate Agreement for the DOE Tank Operations Contract #DE-AC-27-08RV14800
- Washington River Protection Solutions LLC and URS-Washington Division Affiliate Agreement for the DOE Tank Operations Contract #DE-AC-27-08RV14800
- Memorandum of Agreement MOA-WRPS-CHPRC-2008, Rev. 0, *Performance and Payment of Services*
- Memorandum of Agreement TOC-MOA-FH-0004, Rev. 0, *Performance and Payment of Services*
- Memorandum of Agreement TOC-MOA-PNNL-0002, Rev. 0, *Performance And Payment Of Services*
- Request for Offsite Services, Job No.29633_FY 2009 ROS No. 36472-03, *Characterize The Aerial Extent Of Mobile Contaminants For Placement Of Interim Barrier Using The Hydraulic Hammer Unit*
- Statement Of Work, Requisition #: 36472, *Drilling and Related Characterization Services*, Revision Number 0,Date September 9, 2008
- Subcontractor Oversight Plan for Contract Requisition 182012, dated 02/10/2009, *Design and Fabrication of Mobile Retrieval Arm System*
- *Audits/Surveillances,* DWO-QAP-001, dated 5/15/06, revision 9 Energy Solutions Condition Report FW-TSV-XR-08-003
- Energy Solutions Federal Services Internal Memo, Quality Assurance Internal Surveillance Report FS-08-IS-002, *Safety Surveillance of Energy Solutions Employee Performance at UPR 81*
- Energy Solutions Federal Services, Internal Memo CAM-08-4955, Quality Assurance Internal Surveillance Report FS-08-IS-001, *Completion Document for 241-UDirect Push Characterization Services*
- Energy Solutions Surveillance Report FS-08-IS-001, dated January 9, 2008, *Completion Document for 241-U Farm Direct Push Characterization Services*
- Energy Solutions Surveillance Report FS-08-IS-002, dated April 15, 2008, *Safety Surveillance of Energy Solutions Employee Performance at UPR-81*
- RPP-MP-003, Rev. 5c, *Integrated Environment, Safety, and Health Management System Description for the Tank Farm Contractor*
- RPP-8411, Rev. 1, *Washington River Protection Solutions Procurement Process Description*

ATTACHMENT B
DOCUMENTS REVIEWED

- *Training Implementation Matrix Per DOE Order 5480.20A*, Rev. 20A-3 dated September 2005
- *FY2009 – WRPS Integrated Assessment Schedule*, dated January 12, 2009
- 24590-WTP-PL-MG-01-001, Rev. 2, *Interface Management Plan* (WTP)
- *Washington River Protection Solutions Parent Organization Support Plan FY 2009*, approved August 29, 2008
- *Washington River Protection Solutions (WRPS) General Provisions*, dated November 20, 2008
- *Washington River Protection Solutions (WRPS) Commercial General Provisions*, dated November 20, 2008
- *Washington River Protection Solutions (WRPS) On-Site Work Provisions*, dated February 10, 2009
- *Washington River Protection Solutions Evaluated Supplier List*, dated October 28, 2008 (including the *Fluor Hanford Evaluated Supplier List*, dated February 13, 2009)
- HNF-MP-5184, Rev. 7, *Washington River Protection Solutions Radiation Protection Program*
- TFC-PLN-02, Rev. E-2, *Quality Assurance Program Description*
- TFC-PLN-43, Rev. A-13, *Tank Operations Contractor Health and Safety Plan*
- TFC-PLN-47, Rev. B-2, *Worker Safety and Health Program*
- TFC-PLN-55, Rev. A-2, *Industrial Hygiene Safety Management Program Plan*
- TFC-PLN-58, Rev, C, *Chemical Management Plan*
- TFC-PLN-73, Rev. B-5, *Environmental Protection and Compliance Plan*
- TFC-PLN-83, Rev. B, *Assurance System Program Description*
- TFC-PLN-102, Rev. A, *TOC Interface Management Plan*
- TFC-POL-16, Rev. B, *Integrated Safety Management System Policy*
- TFC-BSM-AC-C-04, Rev. B-4, *Intercompany Work Exchange Agreements*
- TFC-BSM-CP_CPR-C-02, Rev. A-11, *Noncompetitive Procurement Justification*
- TFC-BSM-CP_CPR-C-05, Rev. H-4, *Procurement of Services*
- TFC-BSM-CP_CPR-C-06, Rev. G-4, *Procurement of Items (Materials)*
- TFC-BSM-CP_CPR-C-09, Rev. B-13, *Supply Chain Process*
- TFC-BSM-CP_CPR-C-17, Rev. A-5, *Interface Management*
- TFC-BSM-CP_CPR-D-02-10, Rev. A-4, *Construction Contracting*
- TFC-BSM-CP_CPR-D-02-13, Rev. A-2, *Services from Other Hanford Prime Contractors*
- TFC-BSM-CP_CPR-D-04.1, Rev. A-2, *Good Subcontract Administration Practices*
- TFC-BSM-CP_CPR-D-04.5, Rev. A-4, *Subcontract Termination*
- TFC-BSM-CP_CPR-D-05.1, Rev. A-4, *Close-out Process*
- TFC-BSM-CP_CPR-D-16, Rev. B, *Preparation, Negotiation, Administration, and Completion of Performance Based Incentives*
- TFC-BSM-CP_CPR-P-04, Rev. A-10, *Subcontract Administration*
- TFC-BSM-CP_CPR-P-05, Rev. B-3, *Subcontract Closeout*
- TFC-ESHQ-S_SAF-C-07, Rev. B-6, *Subcontractor Oversight*
- TFC-ESHQ-Q_ADM-C-01, Rev. A-3, *Graded Quality Assurance*

ATTACHMENT B
DOCUMENTS REVIEWED

- TFC-ESHQ-Q_ADM-C-09, Rev. A-3, *Supplier Quality Assurance Program Evaluation*
- TFC-ESHQ-Q_PP-P-02, Rev. D-3, *Quality Assurance Surveillances*
- TFC-PRJ-CM-C-01, Rev. A-13, *Construction Management*
- TFC-PRJ-CM-C-05, Rev. A-3, *Construction Subcontractor Progress Meetings*
- TFC-PRJ-CM-C-08, Rev. B-2, *Construction Completion and Turnover*
- TFC-PRJ-CM-C-015, Rev. A-1, *Construction Subcontractor Closeout*
- Form A-6003-991, Rev. 06/05, *Subcontractor Oversight Plan* (Screening Form)
- Key Word Search 'Interface' of the Problem Evaluation Request Database for the 3-Year Period Ending January 30, 2009
- Key Word Search 'Oversight' of the Problem Evaluation Request Database for the 3-Year Period Ending January 29, 2009
- Key Word Search 'Subcontractor' of the Problem Evaluation Request Database for the 3-Year Period Ending January 29, 2009
- *Independent Assessment of Worker Safety and Health Program, FY2008-CH2M-I-0005, dated June 24, 2008*
- *PAAA Program Review/Self Assessment, Management Assessment Report FY2008-SHQ-M-0159*, dated May 29, 2008
- *Subcontractor Oversight Process,* Management Assessment, FY2007-SHQ-M-0135 dated March 26, 2007
- *Interface Program – Management Assessment Report FY2006-SPPC-M-0150*, dated September 26, 2006
- *CH2M HILL Corporate Independent Assessment of CHG Hanford Tank Farm Activities*, dated January 13, 2006
- *Contractor Reporting of Non-Compliances, Management Assessment FY2006-PAAA-M-0156*, dated December 28, 2005
- *QA Management Assessment of Subcontractor/Vendor QA Implementation Plans – FY2006-QA-M-0122*, dated December 21, 2005
- *Management Assessment of Contractor Flow Down of Requirements*, FY2005-PA-M-0175, dated June 5, 2005
- *River Protection Project Quality Assurance Audit Report RPP-A-02-09, Revision 0, Construction Quality Requirement Flow-Down and Subcontractor Oversight*, dated November 25, 2002

Save

Problem Evaluation Request (PER)

WRPS-PER-2009-0476
In Process/Work

PER No	Date of Discovery	Time of Discovery (24:00)	Project
WRPS-PER-2009-0476	03/27/2009	10:00	Procurement

Location

All Tank Farms

How Was Problem Discovered

Independent Assessment

Description of Concern or Problem

An Independent Assessment of Subcontract Management and Oversight was conducted from February 23 through March 5, 2009. The assessment resulted in six findings and sixteen observations. Details are provided in the attached assessment report.

Finding SO-F5 Buyer Technical Representatives and Contract Requestors have incorrectly determined in several instances that Subject Matter Expert (SME) approval of relevant Statements of Work (SOW) was not necessary. For example, approval by the Radiological Control organization was not identified for several inspection field work activities to be performed within Tank Farms. Contributing to this issue was incorrect determination by the Buyer Technical Representatives and Contract Requestors as to the need for some of the SMEs to approve the SOWs. This is identified as ineffective implementation of step 4.3.19 (Creating and Approving the Statement of Work) of TFC-BSM-CP_CPR-C-05, Procurement of Services, to determine the required SOW approvals.

Requirement Not Satisfied	Source Document Number
TFC-BSM-CP_CPR-C-05, Procurement of Services,	FY2009-WRPS-I-0002
Equipment Identification Number	**System Identification**

Immediate actions Taken or Planned

Discussed the issue with the Manager - ESH&Q.

Recommended Corrective actions

Recommend assignment to F Beranek as a PER/RES.

Originator Contact

No

Originators Name	Originators ID	Originators Phone	Date Initiated
Flasch, Michael P	H5610828	(509) 373-4473	03/27/2009

SHIFT OPERATIONS REVIEW

Title

Independent Assessment of Subcontract Management and Oversight - Finding SO-F5

How Discovered		Agency	
self-ID prior to event			
Reportability	**SSC Operability**	**Operability Review**	**Comp Measures Req**
Non-Reportable	N/A	N/A	

Describe actions Taken or Recommended

No additional actions taken or recommended by BO SSM

SO Reviewer Name	SO Reviewer ID	SO Reviewer Phone	SO Review Date
Malhan, Rakesh	H0046812	(509) 373-2689	03/27/2009

SCREENING

PER Significance Level			
PER with Resolution			
Independent Assessment Review	**Occurrence Report Number**	**Externally Identified**	
Yes		No	
Assigned	**Facilities Rep / SSO**	**Safety Management Rep**	

Responsible Manager			
Beranek, Fred			
Program		**Safety Management Program**	
• N/A		• ^N/A^	
PER Screening Comments			
PER w/ Res with informal Apparent Cause Analysis (Nancy Brown 03/30/09)			
Causal Code			
A4B3C08	Management Problem Work Organization and Planning LTA Job scoping did not identify special circumstances an/or conditions		
A5B2C05	Communications LTA Written Communications Content LTA Ambiguous instructions/requirements		
MGT/Comm/Train	**Human Performance**	**GEMS**	**Equip/Eng/Other**
Failed Barrier	**ORPS Code**	**Functional Area**	**Work Process**
	Not Applicable	Sub-Contractor	• Assessments • BTR/Buyer's Technical Representative Process • Radiological Work Planning • Subcontractor Oversight
ISMS	**Consequence Code**		
Perform work within the controls	• Communications - Inadequate communications, roles, responsibilities • Procedure - Administrative - Procedure ambiguous, in error, could not be worked, was not used • Rad WorkPlan - Planning of Work - Work planning process deficient or inadequate in specifying appropriate hazard controls		
PER Screening Chair	**PER Screening Chair ID**	**PER Screening Chair Phone**	**PER Screening Date**
Brown, Nancy L	H0088797	(509) 373-0992	03/30/2009
PAAA REVIEW			
PAAA Screening	**PAAA Codes**	**Function Codes**	
PAAA, Non-NTS Reportable	• 10 CFR 830.121 (b)(1) • 10 CFR 830.122 (e)(1)	• Qualification	
NTS Report Number	**NTS Report Date**		
Repetitive / Recurrent	**Programmatic**	**Intentional Violation / Misrepresentation**	
No	No	No	
PAAA Screening Comments			
PAAA Reviewer Name	**PAAA Review Date**		
Waters, Shaun F	03/30/2009		
PAAA Approver Name	**PAAA Approve Date**		

Anderson, Craig E	04/01/2009	

CAUSE ANALYSIS

Description of Occurrence

Buyer Technical Representatives and Contract Requestors have incorrectly determined in several instances that Subject Matter Expert (SME) approval of relevant Statements of Work (SOW) was not necessary. For example, approval by the Radiological Control organization was not identified for several inspection field work activities to be performed within Tank Farms. Contributing to this issue was incorrect determination by the Buyer Technical Representatives and Contract Requestors as to the need for some of the SMEs to approve the SOWs. This is identified as ineffective implementation of step 4.3.19 (Creating and Approving the Statement of Work) of TFC-BSM-CP_CPR-C-05, Procurement of Services, to determine the required SOW approvals.

Extent of Condition

Statements of Work in some subcontracts

Safety Significance

Despite the lack of review at the contracting stage, field resources are assigned to assure work being done in compliance, therefore no safety significance is determined.

Generic Implications

Remedial Corrective Action

Held a discussion with the Manager of ESH&Q

Causal Analysis, Apparent Cause and/or Root Cause Analysis

Upon review, it has been determined that inadequate communications, ambiguous procedure, and inadequate work planning and BTR performance is the apparent cause of this finding.

CORRECTIVE ACTIONS

Actionee	Action Due Date	E-STARS Number
Robinson, John M	08/03/2009	

Action

Sample 10% of open Statements of Work to determine if SME reviews are being performed when warranted.

Deliverable: A written statement from the Manager of Procurement with the results of the review.

Corrective Action Attachments

ATTACHMENTS

Link to PER

RE_ PER2009-472_ 0474_ 0476.msg

RE_ WRPS-PER-2009-0476 Extension Request.msg

AUDIT HISTORY

Change Date	Auditor	Comments
03/30/2009 08:20	Owen, Annette	'Source Document Number Available' was changed.
03/30/2009 14:26	Brown, Nancy L	'Selected Work Processes' have changed. 'Selected Consequence Codes' have changed.
03/31/2009 08:24	Brown, Nancy L	Responsible Manager Task Launched by Brown, Nancy L
05/06/2009 13:21	Brown, Nancy L	'SMP Owner' was changed.
05/06/2009 14:08	Glaman, Linda R	'Screening Safety Managemnt Program' was removed - SMP incorrectly identified. L Glaman at the request of M Silvia
06/11/2009 16:28	Bowman, Tami A	Change to Cause Analysis screen/Corrective Action plan.
06/17/2009 13:04	Bowman, Tami A	Change to Cause Analysis screen/Corrective Action plan.

-- End of Report --
08/06/2009 05:50 PM

Task# WRPS-PER-2009-0476

E-STARS[R] Report
Task Detail Report
08/06/2009 1751

TASK INFORMATION			
Task#	WRPS-PER-2009-0476		
Subject	RES; Independent Assessment of Subcontract Management and Oversight - Finding SO-F5		
Parent Task#		**Status**	Open
Reference		**Due**	08/25/2009
Originator	^PER Coordinator	**Priority**	Medium
Originator Phone		**Category**	PER
Origination Date	03/27/2009 1059	**Generic1**	None
Remote Task#		**Generic2**	None
Deliverable	PER Review	**Generic3**	None
Class	None	**View Permissions**	Global
Instructions	*No Instructions*		

ROUTING LISTS		
1	Responsible Manager	Active
	Review the PER Screening Tab and Senior Manager Review for requested data. Complete the task in E-STARS in accordance with TFC-ESHQ-Q_C-C-01, and TFC-ESHQ-Q_ADM-C-12 Apparent Cause Analysis & Corrective Action Planning.	
	• Beranek, Fred - Assign - Completed with comments - 06/11/2009 1509 *Instructions:*	
	• Beranek, Fred - Assign - Completed with comments - 07/21/2009 0628 *Instructions:* The corrective actions do not address the issues identified in the causal analysis. Modify corrective actions or causal analysis such that the actions address the causal analysis	
	• ^Independent Assessment Review(Penick, Lee R) - Review - Concur with comments - 07/22/2009 1010 *Instructions:* Independent Assessor Review	
	• Van Meighem, Jeff S - Review - Withdrawn - 05/06/2009 1320 *Instructions:* Safety Management Representative Review	
2	Review Initial PER	Inactive
	Review New PER	
	• ^SO(Malhan, Rakesh) - Review - Concur - 03/27/2009 1542 *Instructions:*	
	• ^PER Screening(Brown, Nancy L) - Review - Concur - 03/30/2009 1425 *Instructions:*	
	• ^Mgr Review - Review - Cancelled - 03/31/2009 0824 *Instructions:*	

ATTACHMENTS	
Attachments	1. Link to PER 2. RE_ PER2009-472_ 0474_ 0476.msg 3. RE_ WRPS-PER-2009-0476 Extension Request.msg

COMMENTS	
Poster	^PER Coordinator (Glaman, Linda R) - 05/07/2009 1308

Task# WRPS-PER-2009-0476

	1st Extension to 6-15-09 per attached email request. LBG
	The Manager is working the PERs however more time is need to ensure proper assignments and completion of requirements. Further extensions will be based on progress on the assignment of PER to responsible party for actions, completion of the cause analysis, and development of corrective actions by 06/15/2009. T Bowman for F Beranek 5-9-09 The extension is approved please include comment.M Silvia for C Maciuca 5-9-09
Poster	Beranek, Fred (Bowman, Tami A) - 06/11/2009 1509
	Completed
	Corrective action ready for launch. Beranek/Bowman 06/11/2009
Poster	^Independent Assessment Review (Brown, Robert L) - 06/11/2009 1612
	The current extent of condition and safety significance text need more explanation. Contacted responder per voice mail.
Poster	^PER Coordinator (Glaman, Linda R) - 07/07/2009 0816
	2nd extension to 8-17-09 per attached email. LBG 7-7-09
	Please extend the above referenced PERs as follows: RM Fred Beranek Due 06/15/2009 Extend 08/17/2009 Resolution is pending based on the outcome of the Subcontract Oversight meetings Tami Bowman for F Beranek 7-2-09 B Brown for T Maciuca 7-2-09
Poster	Beranek, Fred (Bowman, Tami A) - 07/21/2009 0628
	Completed
	Action complete, please see PIE/CIM evaluation. Bowman 07/21/09
Poster	^Independent Assessment Review (Penick, Lee R) - 07/22/2009 1010
	Concur
	Concurring with the thinking that the items discussed in the Apparent Cause Analysis will be properly addressed after the survey is Complete and the problem better scoped with this larger sample size survey. Lee Penick

TASK DUE DATE HISTORY

Modified	07/07/2009 0814 - ^PER Coordinator (Glaman, Linda R)	**New Due Date**	08/25/2009 1630
Modified	05/07/2009 1307 - ^PER Coordinator (Glaman, Linda R)	**New Due Date**	06/23/2009 1630
Modified	03/31/2009 0824 - ^PER Coordinator	**New Due Date**	05/11/2009 1630
Modified	03/31/2009 0824 - ^PER Coordinator	**New Due Date**	05/19/2009 1630
Modified	03/27/2009 1059 - ^PER Coordinator	**New Due Date**	03/29/2009 1630

SUB TASK HISTORY

No Subtasks

-- end of report --

Message

From: Brown, Robert L
Sent: Thursday, July 02, 2009 3:24 PM
To: ^WRPS Corrective Action Group
Subject: RE: PER2009-472, 0474, 0476

We need to extend these.

From: ^WRPS Corrective Action Group
Sent: Thursday, July 02, 2009 2:11 PM
To: ^WRPS Corrective Action Group; Brown, Robert L
Cc: Beranek, Fred; Bowman, Tamara
Subject: RE: PER2009-472, 0474, 0476
Importance: High

All the subject PERs have been completed and returned for rework by the IA reviewer. This would be the 2nd extension, making the PERs 146 days old at resolution completion.

Thanks...As always, please call if you have questions

Linda RB Glaman
Operations Support Specialist/CAM
376-1776/376-6249
2750E/A-208/R2-87

The Lone CAM-mer

From: Bowman, Tamara
Sent: Thursday, July 02, 2009 2:02 PM
To: ^WRPS Corrective Action Group
Cc: Beranek, Fred
Subject: PER2009-472, 0474, 0476

Please extend the above referenced PERs as follows:

RM Fred Beranek

Due 06/15/2009

Extend 08/17/2009

Resolution is pending based on the outcome of the Subcontract Oversight meetings

Tami Bowman

"Safety - Our Way of Life"
W- 509-372-0031
C- 509-438-5268
Fax- 509-373-2715

Message

From: Silvia, Michael J (Mike)
Sent: Thursday, May 07, 2009 11:32 AM
To: ^WRPS Corrective Action Group; Maciuca, Constantin
Cc: Bowman, Tamara; Beranek, Fred
Subject: RE: WRPS-PER-2009-0476 Extension Request

The Manager is working the PERs however more time is need to ensure proper assignments and completion of requirements. Further extensions will be based on progress on the assignment of PER to responsible party for actions, completion of the cause analysis, and development of corrective actions by 06/15/2009.

The extension is approved please include comment.

Mike

From: ^WRPS Corrective Action Group
Sent: Thursday, May 07, 2009 10:26 AM
To: Silvia, Michael J (Mike); Maciuca, Constantin
Subject: FW: PER Extensions
Importance: High

The following PER with Resolution extension requests have been received, see message below...

WRPS-PER-2009-0472: 1st extension; currently due 5-11; no resolution information.
WRPS-PER-2009-0473: 1st extension; currently due 5-11; no resolution information.
WRPS-PER-2009-0474: 1st extension; currently due 5-11; no resolution information.
WRPS-PER-2009-0476: 1st extension; currently due 5-11; no resolution information.
WRPS-PER-2009-0477: 1st extension; currently due 5-11; no resolution information.

Thanks...As always, please call if you have questions

Linda RB Glaman
Operations Support Specialist/CAM
376-1776/376-6249
2750E/A-208/R2-87

"The only stupid question is the one that remains unasked"

From: Bowman, Tamara
Sent: Thursday, May 07, 2009 8:57 AM
To: ^WRPS Corrective Action Group
Cc: Beranek, Fred
Subject: PER Extensions

Please extend the following PERs:

WRPS-PER-2009-0472, 0473, 0474, 0476, and 0477

PER w/Res

RM Fred Beranek

Curr Due 05/11/2009

Extend 06/15/2009

Additional time is needed to complete actions required for resolution.

Thank you.

Tami Bowman

"Safety - Our Way of Life"
W- 509-372-0031
C- 509-438-5268
Fax- 509-373-2715

Save

Problem Evaluation Request (PER)

WRPS-PER-2009-0477
In Process/Work

PER No	Date of Discovery	Time of Discovery (24:00)	Project
WRPS-PER-2009-0477	03/27/2009	10:00	Procurement

Location

All Tank Farms

How Was Problem Discovered

Independent Assessment

Description of Concern or Problem

An Independent Assessment of Subcontract Management and Oversight was conducted from February 23 through March 5, 2009. The assessment resulted in six findings and sixteen observations. Details are provided in the attached assessment report.

Finding SO-F6 Record retention requirements for Subcontractor Oversight Plan (screening) forms and scheduling requirements for subcontractor oversight activities are not implemented as described in TFC-ESHQ-S_SAF-C-07, Subcontractor Oversight.

Requirement Not Satisfied	Source Document Number
TFC-ESHQ-S_SAF-C-07, Subcontractor Oversight	FY2009-WRPS-I-0002
Equipment Identification Number	**System Identification**

Immediate actions Taken or Planned

Discussed the issue with the Manager - ESH&Q.

Recommended Corrective actions

Recommend assignment to F Beranek as a PER/RES.

Originator Contact

No

Originators Name	Originators ID	Originators Phone	Date Initiated
Flasch, Michael P	H5610828	(509) 373-4473	03/27/2009

SHIFT OPERATIONS REVIEW

Title

Independent Assessment of Subcontract Management and Oversight - Finding SO-F6

How Discovered	Agency
self-ID prior to event	

Reportability	SSC Operability	Operability Review	Comp Measures Req
Non-Reportable	N/A	N/A	

Describe actions Taken or Recommended

No additional actions taken or recommended by BO SSM

SO Reviewer Name	SO Reviewer ID	SO Reviewer Phone	SO Review Date
Malhan, Rakesh	H0046812	(509) 373-2689	03/27/2009

SCREENING

PER Significance Level	
PER with Resolution	

Independent Assessment Review	Occurrence Report Number	Externally Identified	
Yes		No	
Assigned Responsible Manager	**Facilities Rep / SSO**	**Safety Management Rep**	
Beranek, Fred			

Program	Safety Management Program

• N/A		• ^N/A^	
PER Screening Comments			
PER w/ Res with informal Apparent Cause Analysis (Nancy Brown 03/30/09)			
Causal Code			
A4B1C07	Management Problem Management Methods LTA Responsibility of personnel not well-defined or personnel not held accountable		
MGT/Comm/Train	**Human Performance**	**GEMS**	**Equip/Eng/Other**
Failed Barrier	**ORPS Code**	**Functional Area**	**Work Process**
	Not Applicable	Sub-Contractor	• Assessments • Subcontractor Oversight
ISMS	**Consequence Code**		
Perform work within the controls	• Procedure - Administrative - Procedure ambiguous, in error, could not be worked, was not used • Records - Errors or incomplete data recording, checklists		
PER Screening Chair	**PER Screening Chair ID**	**PER Screening Chair Phone**	**PER Screening Date**
Brown, Nancy L	H0088797	(509) 373-0992	03/30/2009
PAAA REVIEW			
PAAA Screening	**PAAA Codes**	**Function Codes**	
PAAA, Non-NTS Reportable	• 10 CFR 830.122 (d)(2) • 10 CFR 830.122 (e)(1)	• Records	
NTS Report Number	**NTS Report Date**		
Repetitive / Recurrent	**Programmatic**	**Intentional Violation / Misrepresentation**	
No	No	No	
PAAA Screening Comments			
PAAA Reviewer Name	**PAAA Review Date**		
Waters, Shaun F	03/30/2009		
PAAA Approver Name	**PAAA Approve Date**		
Anderson, Craig E	04/01/2009		
CAUSE ANALYSIS			
Description of Occurrence			
Record retention requirements for Subcontractor Oversight Plan (screening) forms and scheduling requirements for subcontractor oversight activities are not implemented as described in TFC-ESHQ-S_SAF-C-07, Subcontractor Oversight.			
Extent of Condition			
BTR's were noted as the Records Custodian. Depending on the number of times they exercised their BTR responsibilities the better the maintenance of their files and records.			
Safety Significance			
Maintaining these Oversight Plans did not impact the physical danfety and health of the employees.			
Generic Implications			
Remedial Corrective Action			
Discussions with Procurement about where these records should be maintained and how best to have a consistent record system for a Statement of Work. The best approach was to have procurement be the records custodian since they work with the subcontract on a daily basis and can provide more assistance to the BTR in record requirements.			

Causal Analysis, Apparent Cause and/or Root Cause Analysis
Due to the number of BTRs, level of training, experience and frequency of using their BTR skills, record retention has varied. With organizational changes, communication links with BTR's discussing issues and new information were dropped. To correct this the TFC-ESHQ-S_SAF-C-07, Subcontractor Oversight procedure was revised so that the records custodian is now Procurement. This was done at their request - recognizing that this organization understands the need and requirements to have a consistent approach for maintaining records.

ATTACHMENTS

Link to PER
RE_ WRPS-PER-2009-0477 Extension Request.msg
Subcontractor Mgt Oversight IA Report.pdf
TFC-ESHQ-S_SAF-C-07, Subcontractor Oversigh06 09 09t.doc
WHY Analysis Records.doc

AUDIT HISTORY

Change Date	Auditor	Comments
03/30/2009 08:20	Owen, Annette	'Source Document Number Available' was changed.
03/31/2009 08:25	Brown, Nancy L	Responsible Manager Task Launched by Brown, Nancy L

-- End of Report --
08/06/2009 05:51 PM

Task# WRPS-PER-2009-0477

E-STARS[R] Report
Task Detail Report
08/06/2009 1752

TASK INFORMATION			
Task#	WRPS-PER-2009-0477		
Subject	RES; Independent Assessment of Subcontract Management and Oversight - Finding SO-F6		
Parent Task#		**Status**	Open
Reference		**Due**	06/23/2009
Originator	^PER Coordinator	**Priority**	Medium
Originator Phone		**Category**	PER
Origination Date	03/27/2009 1101	**Generic1**	None
Remote Task#		**Generic2**	None
Deliverable	PER Review	**Generic3**	None
Class	None	**View Permissions**	Global
Instructions	*No Instructions*		

ROUTING LISTS

1	Responsible Manager	Active
	Review the PER Screening Tab and Senior Manager Review for requested data. Complete the task in E-STARS in accordance with TFC-ESHQ-Q_C-C-01, and TFC-ESHQ-Q_ADM-C-12 Apparent Cause Analysis & Corrective Action Planning.	
	• Beranek, Fred - Assign - Completed with comments - 06/11/2009 1535 *Instructions:*	
	• ^Independent Assessment Review(Brown, Robert L) - Review - Concur with comments - 06/29/2009 1652 *Instructions:* Independent Assessor Review	
2	Review Initial PER	Inactive
	Review New PER	
	• ^SO(Malhan, Rakesh) - Review - Concur - 03/27/2009 1543 *Instructions:*	
	• ^PER Screening(Brown, Nancy L) - Review - Concur - 03/30/2009 1429 *Instructions:*	
	• ^Mgr Review - Review - Cancelled - 03/31/2009 0825 *Instructions:*	

ATTACHMENTS

Attachments	1. Link to PER 2. RE_ WRPS-PER-2009-0477 Extension Request.msg 3. Subcontractor Mgt Oversight IA Report.pdf 4. TFC-ESHQ-S_SAF-C-07, Subcontractor Oversigh06 09 09t.doc 5. WHY Analysis Records.doc

COMMENTS

Poster	^PER Coordinator (Glaman, Linda R) - 05/07/2009 1310
	1st Extension to 6-15-09 per attached email request. LBG
	The Manager is working the PERs however more time is need to ensure proper assignments and completion of requirements. Further extensions will be based on progress on the assignment of PER to responsible party for actions, completion of the cause analysis, and

Task# WRPS-PER-2009-0477

	development of corrective actions by 06/15/2009. T Bowman for F Beranek 5-9-09 The extension is approved please include comment.M Silvia for C Maciuca 5-9-09		
Poster	Beranek, Fred (Bowman, Tami A) - 06/11/2009 1535		
	Completed		
	A WHY analysis was completed to understand why record retention requirements are not being implemented as required. Each BTR has a different approach for maintaining records applicable to a contract. Some BTRs have minor roles and do not develop SOWs on a regular basis and their records vary based on experience and training. Guidance from procurement and safety is provided in initial BTR training and training of record retention is minimal. Last, changes in organizations have left gaps in communication with BTRs and new information supplied. Action complete. Calderon/Bowman 06/11/2009		
Poster	^Independent Assessment Review (Brown, Robert L) - 06/29/2009 1652		
	Concur		
	The current procedure calls out procurement as the records custodian.		
TASK DUE DATE HISTORY			
Modified	05/07/2009 1310 - ^PER Coordinator (Glaman, Linda R)	**New Due Date**	06/23/2009 1630
Modified	03/31/2009 0825 - ^PER Coordinator	**New Due Date**	05/11/2009 1630
Modified	03/31/2009 0825 - ^PER Coordinator	**New Due Date**	05/15/2009 1630
Modified	03/27/2009 1101 - ^PER Coordinator	**New Due Date**	03/29/2009 1630
SUB TASK HISTORY			
Subtask#	WRPS-PER-2009-0477.1		
Subject	RES; Independent Assessment of Subcontract Management and Oversight - Finding SO-F6		
Originator	Beranek, Fred (Bowman, Tami A)		
	Routing List	*No Active Routing List*	

-- end of report --

Message

From: Silvia, Michael J (Mike)
Sent: Thursday, May 07, 2009 11:32 AM
To: ^WRPS Corrective Action Group; Maciuca, Constantin
Cc: Bowman, Tamara; Beranek, Fred
Subject: RE: WRPS-PER-2009-0477 Extension Request

The Manager is working the PERs however more time is need to ensure proper assignments and completion of requirements. Further extensions will be based on progress on the assignment of PER to responsible party for actions, completion of the cause analysis, and development of corrective actions by 06/15/2009.

The extension is approved please include comment.

Mike

From: ^WRPS Corrective Action Group
Sent: Thursday, May 07, 2009 10:26 AM
To: Silvia, Michael J (Mike); Maciuca, Constantin
Subject: FW: PER Extensions
Importance: High

The following PER with Resolution extension requests have been received, see message below...

WRPS-PER-2009-0472: 1st extension; currently due 5-11; no resolution information.
WRPS-PER-2009-0473: 1st extension; currently due 5-11; no resolution information.
WRPS-PER-2009-0474: 1st extension; currently due 5-11; no resolution information.
WRPS-PER-2009-0476: 1st extension; currently due 5-11; no resolution information.
WRPS-PER-2009-0477: 1st extension; currently due 5-11; no resolution information.

Thanks...As always, please call if you have questions

Linda RB Glaman
Operations Support Specialist/CAM
376-1776/376-6249
2750E/A-208/R2-87

"The only stupid question is the one that remains unasked"

From: Bowman, Tamara
Sent: Thursday, May 07, 2009 8:57 AM
To: ^WRPS Corrective Action Group
Cc: Beranek, Fred
Subject: PER Extensions

Please extend the following PERs:

WRPS-PER-2009-0472, 0473, 0474, 0476, and 0477

PER w/Res

RM Fred Beranek

Curr Due 05/11/2009

Extend 06/15/2009

Additional time is needed to complete actions required for resolution.

Thank you.

Tami Bowman

"Safety - Our Way of Life"
W- 509-372-0031
C- 509-438-5268
Fax- 509-373-2715

Washington River Protection Solutions LLC
Independent Assessment
of
Subcontract Management and Oversight

February 23 to March 10, 2009

Final Report Rev. 0
FY2009-WRPS-I-0002

washington **river**
protection solutions

Approved: _____
M. J. Silvia,
Team Lead

Team Members:

R. L. Brown	3-30-09 Date
M. P. Flasch	03/30/09 Date
L. R. Penick	3/30/09 Date

TABLE of CONTENTS

1.0 INTRODUCTION 1
2.0 PURPOSE AND SCOPE 1
3.0 EXECUTIVE SUMMARY 2
4.0 ASSESSMENT RESULTS 7
4.1 Functional Area: Interface Management 7
4.2 Functional Area: Subcontractor Management and Oversight / Objective #1 9
4.3 Functional Area: Subcontractor Management and Oversight / Objective #2 15
4.4 Functional Area: Subcontractor Management and Oversight / Objective #3 17
4.5 Functional Area: Document Control 23
4.6 Functional Area: Records Management 27

ATTACHMENTS

ATTACHMENT A - PERSONNEL CONTACTED 29
ATTACHMENT B - DOCUMENTS REVIEWED 32

ACRONYMS

AIA	Administrative Interface Agreement
BMA	Blanket Master Agreement
BTR	Buyer's Technical Representative
DOE	Department of Energy
EJTA	Employee Job and Task Analysis
ESH&Q	Environmental, Safety, Health, and Quality
ESRB	Executive Safety Review Board
ESL	Evaluated Suppliers List
FY	Fiscal Year
ICWEA	Intercompany Work Exchange Agreements
ISMS	Integrated Safety Management System
MOP	Management Observation Program
MOU	Memorandum of Agreement
PAAA	Price Anderson Amendment Act
PER	Problem Evaluation Request
POC	Point of Contact
QA	Quality Assurance
ROS	Request for On-site Services
RTK	Right to Know
SME	Subject Matter Expert
SOW	Statement of Work
TOC	Tank Operations Contractor
WRPS	Washington River Protection Solutions
WSHP	Worker Safety and Health Plan

1.0 INTRODUCTION

The Washington River Protection Solutions LLC *Quality Assurance Program Description*, TFC-PLN-02, requires that independent assessments be conducted to evaluate the performance of work processes with regard to requirements, customer expectations, and efforts to achieve the mission and goals of the organization. From February 23, 2009 through March 10, 2009, an independent assessment was conducted of the Washington River Protection Solutions management systems that implement the subcontract management and oversight processes. The assessment was led by Mr. Michael J. Silvia, with support from Performance Assurance personnel Robert L. Brown, Michael P. Flasch, and Lee R. Penick. This report documents the assessment details and results of the areas evaluated.

2.0 PURPOSE AND SCOPE

The purpose of this independent assessment was to evaluate the effectiveness of implementation of processes that support subcontract management and oversight. Assessment scope was as follows:

- Interface Management
  - Interfaces are effectively identified, documented, communicated and implemented with other Hanford Site Prime Contractors, as well as with other external contractors and companies.
- Subcontract Management and Oversight
  - Subcontract management and oversight activities are performed by knowledgeable WRPS personnel in accordance with well-defined and documented process expectations.
  - Subcontract management and oversight activities are supported by effective flow-down of requirements to the subcontractors.
  - Subcontract management and oversight activities are supported by periodic interface with responsible subcontractor personnel, including observations of in-progress field work, corrective action management, records management, and notification and reporting.
  - The WRPS Quality Assurance program is employed effectively to support subcontract management and oversight activities.

This assessment was performed in accordance with Washington River Protection Solutions procedure TFC-ESHQ-AP-C-02, *Independent Assessments*.

3.0 EXECUTIVE SUMMARY

The Independent Assessment of subcontract management and oversight was conducted February 23, 2009 through March 10, 2009. Though personnel resources and procedural direction are in place to provide Environment, Safety, Health and & Quality oversight of subcontracts, the subcontract oversight process needs significant improvement in both program content and implementation. The assessment team concluded the following:

a. The mission and organizational structure that supports interface management to ensure identification, documentation, and communication was found to be adequate and effective at present time.
b. Functional leadership for, and knowledge of, personnel performing the subcontractor oversight function, and effective implementation of the subcontractor oversight expectations, are less than adequate.
c. Flow-down of requirements to the subcontractors was found to be adequate and effective.
d. Implementation of periodic interface with responsible subcontractor personnel, including observations of in-progress field work, corrective action management, records management, and notification and reporting was found to be less than adequate.
e. Document control and records management practices were determined to generally be adequate, the exception being maintenance of subcontractor oversight screening documentation as quality records. Several improvement opportunities were identified to increase process efficiency and effectiveness.

This assessment resulted in six findings and sixteen observations, as follows; the details for each are provided in the body of the report.

Findings:

SO-F1 Programmatic ownership and responsibility for success of the subcontract oversight function have not been established. Guiding Principle 1 of RPP-MP-003, *Integrated Environment, Safety, and Health Management System Description for the Tank Farm Operations Contractor*, establishes expectations for processes to provide clear roles and responsibilities. **(WRPS-PER-2009-0472)**

SO-F2 Assessment activities have not been performed over the past several years to ensure that implementation of the subcontractor management and oversight process is achieving its desired objective. Core Function 5 (Provide Feedback and Continuous Improvement) of Integrated Safety Management as described in RPP-MP-003, *Integrated Environment, Safety, and Health Management System Description for the Tank Farm Operations Contractor*, establishes expectations for feedback and continuous process improvement. **(WRPS-PER-2009-0473)**

SO-F3 Subcontractor Oversight Plan (screening) forms (Form A-6003-991) have not been developed, or have been completed incorrectly, for many subcontracts as required in TFC-ESHQ-S_SAF-C-07, *Subcontractor Oversight*. **(WRPS-PER-2009-0474)**

SO-F4 Subcontractor oversight activities are not performed by the Environmental Programs organization as required by RPP-MP-003, *Integrated Environment, Safety, and Health Management System Description for the Tank Operations Contractor*, and TFC-ESHQ-S_SAF-C-07, *Subcontractor Oversight*. **(WRPS-PER-2009-0475)**

SO-F5 Buyer Technical Representatives and Contract Requestors have incorrectly determined in several instances that Subject Matter Expert (SME) approval of relevant Statements of Work (SOW) was not necessary. For example, approval by the Radiological Control organization was not identified for several inspection field work activities to be performed within Tank Farms. Contributing to this issue was incorrect determination by the Buyer Technical Representatives and Contract Requestors as to the need for some of the SMEs to approve the SOWs. This is identified as ineffective implementation of step 4.3.19 (Creating and Approving the Statement of Work) of TFC-BSM-CP_CPR-C-05, *Procurement of Services*, to determine the required SOW approvals. **(WRPS-PER-2009-0476)**

SO-F6 Record retention requirements for Subcontractor Oversight Plan (screening) forms and scheduling requirements for subcontractor oversight activities are not implemented as described in TFC-ESHQ-S_SAF-C-07, *Subcontractor Oversight*. **(WRPS-PER-2009-0477)**

Observations:

SO-O1 As an area for improvement, development and implementation of a qualification card process, would assist in ensuring that personnel assigned to perform the Buyer Technical Representative function possess the requisite training and experience to perform the function effectively. **(WRPS-PER-2009-0478)**

SO-O2 As an area for improvement, development, staffing and implementation of a limited size core group of personnel to perform all Buyer Technical Representative (BTR) functions has potential to increase both efficiency and effectiveness of the BTR role. **(WRPS-PER-2009-0479)**

SO-O3 Training and awareness of Buyer Technical Representatives regarding their functional roles and responsibilities for subcontractor oversight are less than adequate. **(WRPS-PER-2009-0480)**

SO-O4 Personnel performing Buyer Technical Representative (BTR) responsibilities achieve authorization to perform the function, and are listed on the Procurement web site; however, there is no requirement to receive re-authorization if personnel have not recently performed BTR responsibilities. **(WRPS-PER-2009-0481)**

SO-O5 The *Training Implementation Matrix per DOE Order 5480.20A* dated September 2005 needs to be revised to reflect the correct 'Compliance Reference' for 'Subcontractor Personnel Qualification'. Specifically, Table 2 (General Requirements Matrix), Chapter 1 (General Requirements), Section 3 (Subcontractor Personnel Qualification) references the compliance reference document as TFC-BSM-CP_CPR-C-03, *Buyer's Technical Representative Process*; however, this procedure was cancelled in April 2007, with the key elements incorporated into TFC-BSM-CP_CPR-C-05, *Procurement of Services*. **(WRPS-PER-2009-0482)**

SO-O6 A comprehensive assessment of the integration, procedural direction, and implementation of the WRPS procurement processes has not been performed since calendar year 2002. **(WRPS-PER-2009-0483)**

SO-O7 Subcontractor oversight plan documentation was observed indicating that planned oversight would consist of routine functional area surveillance activities already in place, with no specificity as to the relevant contract/release. Consequently, there is no assurance that the planned oversight activities would consider elements of the contract/release that may require oversight scope of a specialized nature, nor is there assurance that the specific subcontracts received necessary oversight. **(WRPS-PER-2009-0484)**

SO-O8 Observation indicated the ATCO shop is presently in use by construction subcontractors, but there is no evidence of a "Formal Turnover" of the facility from WRPS to the subcontractor in accordance with the provisions of the Statement of Work (reference Contract Requisition 00180390, *241-C-110 Waste Retrieval Systems Installation*). **(WRPS-PER-2009-0485)**

SO-O9 As an area for improvement, actions to screen subcontracts to determine the need for subcontractor oversight and to develop subcontractor oversight plans per TFC-ESHQ-S_SAF-C-07, *Subcontractor Oversight*, should be performed as subcontract pre-award activities rather than as post-award activities. Also, there is no timeframe specified to complete the subcontract oversight screening activity or to develop subcontract oversight plans. **(WRPS-PER-2009-0486)**

SO-O10 *Evaluation of Subcontractor Performance* evaluations are not performed for some subcontracts that roll over year-to-year.
(WRPS-PER-2009-0487)

SO-O11 Several areas of improvement were identified for the Subcontractor Oversight Form (Form A-6003-991) to strengthen the determination process for subcontractor oversight. For example:

a. Approval documentation for functional area managers responsible for subcontract oversight activities needs to be strengthened.
b. Subcontract activities involving field work do not receive particular emphasis for oversight activity.

(WRPS-PER-2009-0488)

SO-O12 TFC-ESHQ-S_SAF-C-07, *Subcontractor Oversight* does not provide recommended subcontractor oversight frequency or depth of review.
(WRPS-PER-2009-0489)

SO-O13 Procedures that support the subcontractor oversight function provide several instances of conflicting direction. In particular, the following procedures are not well integrated to ensure that Buyer Technical Representatives, ESH&Q managers, and Contract Requestors can perform their roles and responsibilities effectively and efficiently:

a. TFC-ESHQ-S_SAF-C-07, *Subcontractor Oversight*
b. TFC-BSM-CP_CPR-C-05, *Procurement of Services*
c. TFC-BSM_CP_CPR-P-05, *Subcontract Closeout*

(WRPS-PER-2009-0490)

SO-O14 TFC-BSM-CP_CPR-C-05, *Procurement of Services* is unclear as to whether the following documents identified in the procedure are to be treated as record material:

a. Determination of Required Approval (DRA) forms
b. Workplace Substance Abuse Program (WSAP) form

(WRPS-PER-2009-0491)

SO-O15 TFC-ESHQ-ENV_AP-D-01, *Environmental Oversight of Subcontractors*, was cancelled in June 2006; however, the document is still listed as a company level guidance document in TFC-PLN-73, *Environmental Protection and Compliance Plan*, and should be replaced with TFC-ESHQ-S_SAF-C-07, *Subcontractor Oversight*.
(WRPS-PER-2009-0492)

SO-O16 Passport is not recognized as a document 'record' database. TFC-BSM-IRM_DC-C-02, *Records Management*, recognizes documents maintained as records in approved TFC Records Storage Areas, Document Service Centers, Records Holding Areas, or electronically stored in the Integrated Document Management System, but is silent on the 'record' determination for the Passport database. **(WRPS-PER-2009-0493)**

4.0 ASSESSMENT RESULTS

The purpose and scope of the assessment were presented at the entrance meeting conducted on February 23, 2009. During the performance of the assessment, periodic assessment team meetings were held to apprise responsible personnel of assessment issues and overall progress. Final assessment results were presented at an exit meeting on March 10, 2009.

The approach used during the assessment consisted of interviews and document reviews, with limited field observation due to the nature of the assessment. Attachment A provides a listing of personnel contacted during the assessment; Attachment B provides a listing of documents reviewed in support of the assessment.

4.1 Functional Area: Interface Management

Objective:

Interfaces are effectively identified, documented, communicated and implemented with other Hanford Site Prime Contractors, as well as with other external contractors and companies.

Criteria/Requirements:

1. Formal intercompany work exchange agreements (ICWEA) are in place between Washington River Protection Solutions LLC (WRPS) and affiliate companies to perform work without fee.
2. Work performed under ICWEAs is approved and authorized.
3. Memorandum of Agreement documents are in place to describe the business management agreements between WRPS and other contractors for the performance and payment of services.
4. Interface agreements are in place, as necessary, to support formal commitments with other Hanford Site Prime Contractors. (Physical system interfaces are controlled via an Interface Control Document, while administrative interfaces are controlled via an Administrative Interface Agreement.)
5. Statements of Work are applied, as necessary, to define the scope, safety, quality, and technical requirements for services that are provided for a discrete transfer of funds.
6. The WRPS assessment program is implemented to monitor the effectiveness of the interface management processes and implementation of safety, environmental, radiological, and quality requirements stated in interface documents.

RESULTS

Conclusion Statement:

The mission and organizational structure that supports interface management to ensure identification, documentation, and communication was found to be adequate and effective at present time. A management assessment is scheduled to review the status of interface documents and validate previous gap analysis to ensure contractual commitments and interfaces are being addressed. There are no Findings or Observations for this objective.

Discussion:

Project Integration consists of five organizations with each having a unique function and responsibility. New to tank farms under the prime contract is Interface Management. The function of this organization is to develop documents that assist with the integration of Hanford Site requirements either shared or provided by new and existing prime contractors under the Department of Energy offices.

Intercompany work exchange agreements (ICWEA) are a subset of the documents that are used to describe services and material request between affiliates, prime contractors, and subcontractors performing work for Washington River Protection Solutions LLC (WRPS). Interface Management will manage the program that communicates, establishes policy and assist in the development of documents for prime contract interfaces points established by each of the respective prime contracts. These documents consist of Memorandum of Agreements (MOA), Interface Control Documents (ICDs), and Administrative Interface Agreements (AIA), while ICWEA documents (blanket master agreement (BMA), request for on-site services (ROS), statement of work (SOW), etc) are controlled and issued by the Procurement Services and Prime Contract.

The processes established under company policies, plans, and procedures require approvals and authorization of ICWEA prior to work commencing. TFC-PLN-102, *TOC Interface Management Plan* outlines the requirements in the Contract related to the Interface Management function and defines the execution/portfolio management strategy the TOC will apply to meet these requirements and support the line management projects. The implementing document for interface management is TFC-BSM-CP_CPR-C-17, *Interface Management.* Interface Management has recently completed the development and updates of prime contract MOAs. The process of developing other interface management documentation to implement formal commitment related to the cooperative transfer of material, energy, or data across company boundaries is on going and tracked by Interface Management.

The Interface Management plan and procedure outline the basic roles, responsibilities and process for the program and development of required documentation. As the program and process progress over the next six to twelve months, focus on areas such as program ownership, field implementation responsibilities, and contractor oversight will need to be

integrated. The roles listed in the plan for interface owner and associated point of contact (POC) will need to flow-down to the procedure level and may need expanding. Assessments, meetings, and issue tracking and resolution will provide feedback on where improvements could be needed in the future.

4.2 Functional Area: Subcontractor Management and Oversight / Objective #1

Objective:

Subcontract management and oversight activities are performed by knowledgeable WRPS personnel in accordance with well-defined and documented process expectations.

Criteria/Requirements:

1. Buyer Technical Representatives (BTRs) and Contract Requestors understand their subcontractor oversight roles and responsibilities, as follows:

    a. BTRs have completed the necessary training and qualification.
    b. BTRs provide technical direction/clarification to the subcontractor to ensure performance of all elements in accordance with the statement of work without placing emphasis on schedule or cost to the detriment of quality, safety, or the environment.
    c. BTRs provide internal coordination of, and interface with, the subcontractor regarding various technical requirements, such as the following:

        i. quality assurance
        ii. safety, health
        iii. Security and Emergency Services
        iv. protective forces
        v. environmental
        vi. Price-Anderson Amendments Act, and
        vii. ISMS principles applicable to the performance of the Contract pursuant to Tank Operations Contract implementing procedures.

2. For subcontracts, BTRs and Contract Requestors ensure subcontract personnel have training and qualifications commensurate with the responsibilities.
3. Roles and responsibility for personnel managing and performing the subcontractor oversight function are clearly established and are implemented effectively.

RESULTS

Conclusion Statement:

Functional leadership for, and knowledge of, personnel performing the subcontractor oversight function, and effective implementation of the subcontractor oversight expectations, are less than adequate. There are two Findings and six Observations for this objective.

Discussion:

Programmatic ownership and responsibility for success of the subcontract oversight function have not been established. Guiding Principle 1 of RPP-MP-003, *Integrated Environment, Safety, and Health Management System Description for the Tank Farm Operations Contractor*, establishes expectations for processes to provide clear roles and responsibilities. TFC-BSM-CP_CPR-C-05, *Procurement of Services* and TFC-ESHQ-S_SAF-C-07, *Subcontractor Oversight*, provide applicable roles and responsibilities for the tasks applicable to the procurement process and subcontractor management and oversight; however, the functional area managers for these procedures acknowledge only their specific functional roles and responsibilities in the overall process. This issue is identified as **Finding SO-F1**. In particular:

a. ISMS Guiding Principle 1 mandates that clear and unambiguous lines of authority and responsibility are established and maintained at all organizational levels. Though the relevant ESH&Q functional area managers confirmed ownership responsibility for their respective functional areas, an individual to serve as the collective management sponsor is not evident.
b. Though the Manager – Industrial Safety is the Functional Area Manager for the subcontract oversight procedure (TFC-ESHQ-S_SAF-C-07, *Subcontractor Oversight*) and the Manager – Procurement Services is responsible for the Buyer Technical Representative function to coordinate the development and implementation of subcontractor oversight plans, neither individual feels that they own or are responsible for success of the subcontractor oversight function.
c. 'Functional area manager' and 'document owner' responsibilities for the above procedure transitioned from the Quality Assurance organization to the Industrial Safety organization with revision B-4 in February 2008. An expectation that process ownership accompany the transfer of procedure ownership was not considered in the transition.
d. Though functional area manager responsibility for the above procedure has recently transitioned, the Manager – Quality Assurance Services remains responsible for the Subcontract Oversight form (Form A-6003-991).
e. PER 09-0166, issued January 27, 2009, discussed knowledge deficiencies encountered with several BTRs regarding the expectations for and implementation of subcontract oversight plans. This PER was categorized as PER/RES, and assigned to the Manager – Procurement Services.

Assessment activities have not been performed over the past several years to ensure that implementation of the subcontractor management and oversight process is achieving its desired objective. Core Function 5 (Provide Feedback and Continuous Improvement) of Integrated Safety Management as described in RPP-MP-003, *Integrated Environment, Safety, and Health Management System Description for the Tank Farm Operations Contractor*, establishes expectations for feedback and continuous process improvement. This issue is identified as **Finding SO-F2**. Contributing factors are as follows:

a. Comprehensive assessments of the subcontractor management and oversight process have not been performed in approximately nine years. Assessment activities have focused on identification and resolution of subcontract management and oversight issues in specific organizational areas, without performance of process assessments to identify and resolve the underlying issues.

    1. A series of subcontract management effectiveness assessments were performed in FY2002, but only one has been performed since (ref. FY-2007-SHQ-M-0135, *Subcontractor Oversight Process*, dated March 26, 2007, performed by the Quality Assurance organization). The one assessment report indicated an assessment of shallow scope and depth of the subcontractor oversight process.
    2. An independent Assessment of '*CH2M HILL Corporate Independent Assessment of CHG Hanford Tank Farm Activities* performed in December 2005 identified "There is no articulated strategy to describe how we approach subcontractor activity in the independent assessment program. ... This issue is relevant because of the heightened expectations from the DOE with respect to our responsibility for ensuring adequate performance of our subcontractors." This issue was supported by a recommendation that "The ESRB should determine if the company strategy to ensure adequate subcontractor oversight is adequately articulated and sufficiently comprehensive" (reference PER 06-0084). The closure documentation for this PER did not provide evidence that the recommendation was considered for action by the ESRB.
    3. An Independent Assessment of 'Procurement to Include Subcontractor Oversight' was planned for FY 2006, but was subsequently cancelled. This assessment was initially planned, in part, in response to PER 06-0084 (January 2006) recommending "The ESRB should determine if the company strategy to ensure adequate subcontractor oversight is adequately articulated and sufficiently comprehensive." Insufficient follow-through of this issue indicates a missed opportunity to preclude the current adverse trend.
    4. There are no further assessments planned in the subcontract management and oversight effectiveness topical area in FY2009.
    5. At the time of the assessment, there are no personnel in the Quality Assurance, Safety or Procurement line management teams qualified to lead Management or Specialty Assessment activities, via completion of Course # 350319, *Management Assessment Team Leader Qualification* or

Course # 357319, *Assessment Team Leader Requalification*. Though the Manager – Quality Services was previously qualified to lead assessment teams, the qualification expired on February 12, 2009. It is recognized that another member (non-management) of the Quality Services organization is presently qualified to lead assessment teams.

6. RPP-8411, *Washington River Protection Solutions Procurement Process Description* (co-approved by ORP) states "... ensure that every product or service purchased meets all necessary technical standards and requirements"; however, monitoring and evaluation of the procurement process are not implemented via implementation of self-assessment processes as discussed in the document to promote continuous improvement (reference sections 2.3, *Oversight and Compliance: Self-Assessment*, and 4.7, *Continuous Process Improvement*). In particular, expectations of section 5.6.1, *Managing Subcontractor Performance* to facilitate exemplary subcontract performance through monitoring of subcontractors to ensure ESH&Q program compliance are infrequently performed.
7. MOPs are not performed of the Subcontractor Oversight function as described in TFC-ESHQ-S_SAF-P-06, *Safety Assessments*. Attachment A (Safety and Health Program Functional Elements and Minimum Assessment Periodicity) identifies Subcontractor Oversight as a topic to be considered in development of the annual safety program assessments and MOP topics; however, review of MOP records in IDMS indicates there have been only two MOPs performed in this area over the past four years. The annual (fiscal year) schedule for Safety and Health program MOPS on topics in Attachment A, such as Subcontractor Oversight, has not been developed for FY2009 as described in Step 4.1 of the procedure. The issue of not scheduling safety MOPs to cover Subcontractor Oversight and other S&H areas is similar to the issue described in PER 08-0252.

b. Several Problem Evaluation Requests (approximately ten PERs) have identified ineffective implementation of subcontractor oversight plans, as identified during Management and Specialty Assessments. However, the corrective action plans associated with the relevant PERs have focused on the functional area responsible for the specific subcontract management and oversight plans, without communication to the process owners (e.g., presently, the Industrial Safety organization). Consequently, emergence of an adverse performance trend has not been identified of the subcontractor oversight process to enable focus on process implementation deficiencies.

c. Discussion with a Safety SME indicated they spend much more time reviewing documents in the office, (submittals, work packages, etc.) than performing field surveillances. The SME stated that not all time spent in the field is necessarily documented as a surveillance. Also, discussions with two SME's indicate they expect the BTR to bring a subcontractor oversight plan screening form to them to be signed or request it be developed, but they don't expect to have to initiate the

oversight screening form themselves. One interviewed SME, specifically asked if he was familiar with the new release of the Subcontractor Oversight procedure dated February 11, 2009 and his responsibility to develop the plan as indicated below, stated that he was not aware.

> 3.2 "Safety & Health, Environmental, Quality Assurance, and Radiological Controls personnel are jointly responsible for coordinating subcontractor oversight activities with the buyer's technical representative (BTR) as specified below. When required, they will develop a Subcontractor Oversight plan and provide it to the BTR and Procurement for transmittal to the Subcontractor."

Presently, for several (approximately 30) subcontracts/releases that apply to in-farm and design/build procurements, the assigned BTR is an administrative individual that does not possess technical knowledge and experience necessary to ensure that elements of the subcontract management and oversight process are implemented effectively. As an area for improvement, development and implementation of a qualification card process, especially of a dual qualification level to differentiate between administrative and technical procurements involving field work, would assist in ensuring that personnel assigned to perform the BTR function possess the requisite training and experience to perform the function effectively. This issue is identified as **Observation SO-O1**.

Personnel that perform the BTR function, when interviewed, stated that implementation of the BTR responsibilities frequently impose upon their normal position duties, and BTR responsibilities are not receiving an appropriate level of commitment. Consequently, decisions are made that result in less than adequate attention to BTR responsibilities. Presently, 36 personnel who are embedded in the line organizations perform the BTR function as a collateral duty. Administrative personnel performing the associated BTR functions appear motivated and interested in success of the subcontract management and oversight process, but sometimes do not recognize or provide challenge when process elements are not implemented in an effective manner (such as responsible functional area managers incorrectly concluding that oversight of field work was not needed). Interview results also indicated that the process knowledge and time commitment necessary to effectively perform BTR responsibilities are not receiving an appropriate level of commitment by most BTRs. As an area for improvement, development, staffing and implementation of a limited size core group of personnel to perform all BTR functions has potential to increase both efficiency and effectiveness of the BTR role. This issue is identified as **Observation SO-O2**.

The method and depth of training provided to BTRs is less than adequate to ensure that BTRs are fully trained to assume the functional roles and responsibilities. BTRs frequently cited a desire for additional training. Document reviews and interviews conducted determined training and awareness of Buyer Technical Representatives regarding their functional roles and responsibilities for subcontractor oversight are less than adequate. This issue is identified as **Observation SO-O3**. For example:

a. Several BTRs stated that they were not aware of the BTR role in subcontractor oversight. Previous assessments found additional examples of BTRs stating that they had no knowledge of TFC-ESHQ-S_SAF-C-07, *Subcontractor Oversight* or the use of Form A-6003-991 (Subcontractor Oversight Plan) to determine the need for oversight of subcontractors.
b. Contributing to this knowledge weakness is discontinuation of a continuing training activity for BTRs that was removed in February 2008. Consequently, personnel performing BTR responsibilities are not provided with continuing training opportunities to maintain proficiency as BTRs.
c. Recent revisions to TFC-BSM-CP_CPR-C-05 that impacted BTR roles specified "Training will be provided to BTRs in their quarterly update"; however, as noted above, quarterly updates have not been provided since 2008.
d. When interviewed, presently active BTRs stated that they would welcome the concept of continuing training. Course #350246, *Buyer Technical Representative Upgrade Class* is the training provided to authorized BTRs; 130 current WRPS personnel have completed Course #350246, *Buyer Technical Representative Upgrade Class* since calendar year 2001, of which 72 are authorized to perform BTR responsibilities, of which 36 are actively performing BTR responsibilities.
e. The procedure for subcontractor oversight provides no delineation between the types of subcontracts (e.g., administrative procurement activities, rather than procurement activities involving field work, though staff augmentation procurements are excluded) and provides no guidance for determining or developing the level or type of subcontractor oversight that might be appropriate for a given type of subcontract, i.e. design, construction, etc. Consequently, BTR knowledge and awareness of subcontractor oversight expectations is entirely dependent upon the BTR's technical knowledge and experience.
f. Increased familiarization with Passport was cited by most BTRs as a desired training activity. In addition, several authorized (but inactive) BTRs are not authorized to access Passport; subsequently, their ability to effectively perform the BTR function is significantly minimized should this support be needed.

Personnel performing Buyer Technical Representative (BTR) responsibilities achieve authorization to perform the function, and are listed on the Procurement web site; however, there is no requirement to receive re-authorization if personnel have not recently performed BTR responsibilities. Consequently, personnel performing BTR responsibilities do not maintain proficiency as BTRs, and are not made aware of changes to BTR processes and expectations or to changes in the procurement process. As an area for improvement, re-authorization of personnel performing BTR responsibilities should be considered (e.g., BTR function authorization removed) if they have not actively performed BTR responsibilities within a specified period of time. This issue is identified as **Observation SO-O4**.

The *Training Implementation Matrix per DOE Order 5480.20A* dated September 2005 needs to be revised to reflect the correct 'Compliance Reference' for 'Subcontractor Personnel Qualification'. Specifically, Table 2 (General Requirements Matrix), Chapter 1 (General Requirements), Section 3 (Subcontractor Personnel Qualification) references the compliance reference document as TFC-BSM-CP_CPR-C-03, *Buyer's Technical Representative Process*; however, this procedure was cancelled in April 2007, with the key elements incorporated into TFC-BSM-CP_CPR-C-05, *Procurement of Services*. Discussion with the Training Manager identified that the need for a revision to the Training Implementation Matrix has been identified and is in progress, including removal of the above reference. This issue is identified as **Observation SO-O5**.

A comprehensive assessment of the integration, procedural direction, and implementation of the WRPS procurement processes has not been performed since calendar year 2002. As an improvement opportunity, performance of an assessment in this area should be considered, to include interface management with the prime contractors and affiliates within the assessment scope. This issue is identified as **Observation SO-O6**.

4.3 Functional Area: Subcontractor Management and Oversight / Objective #2

Objective:

Subcontractor management and oversight activities are supported by effective flow-down of requirements to the subcontractors.

Criteria/Requirements:

1. General site and project-specific safety, health, radiological, environmental, and quality requirements are included in contracts and statements of work, including the following as flowed down through the procurement process to subcontractors:

    a. The Tank Operations Contractor (TOC) Health and Safety Plan (HASP) and the Price Anderson Amendment Act reporting responsibility is applicable to subcontractors who may be involved in tank farm work activities such as design, construction, operation, maintenance, decontamination, decommissioning, and environmental restoration activities.
    b. The medical contractor is responsible for scheduling employees and the employees of contractors, and lower-tier subcontractors for medical qualification examinations and medical monitoring based on the data provided through the EJTA. Results of medical examinations and monitoring are reported to employees, employees of contractors and lower-tier subcontractors, and their respective managers or supervisors. The medical contractor is responsible for maintaining medical records in accordance with the applicable OSHA and DOE requirements.

c. The Chemical Management Plan is relevant to subcontractors involved in the management of hazardous materials.
d. Processes are used to communicate hazardous material information to all personnel who work with hazardous materials during any activity in the tank farms.
e. Construction subcontractors are required to implement the TOC worker safety and health plan (WSHP). The scope, technical complexity, and risk of the construction activity determines the applicable state and federal requirements, as well as the TOC safety procedures, work planning process, and field oversight required.
f. As detailed in HNF-MP-5184 (*Washington River Protection Solutions Radiation Protection Program*) requirements contained in 10 CFR Part 835 are invoked to establish radiation protection standards, limits, and program requirements for protecting individuals from ionizing radiation.
g. The *Washington River Protection Solutions (WRPS) On-Site Work Provisions* elements are invoked, to include the following:

    i. Required Notifications
    ii. Investigation Support
    iii. Reporting and Record Keeping
    iv. Site-wide Qualification and Training
    v. Site Deliveries
    vi. Security
    vii. Medical Evaluations
    viii. Radiation Protection
    ix. Emergency Management
    x. Workplace Substance Abuse Programs
    xi. Whistleblower Protection

2. Subcontractor oversight activities consider reporting of non-compliances to 10CFR851 and PAAA.

RESULTS

Conclusion Statement:

The objective and organizational structure that supports effective flow-down of requirements to the subcontractors was found to be adequate and effective. There are no Findings or Observations for this objective.

Discussion:

TFC-BSM-CP_CPR-C-05, *Procurement of Services*, and TFC-BSM-CP_CPR-C-06, *Procurement of Items (Materials)* ensure that the WRPS contract requirements receive

appropriate flow-down to subcontractors. The responsibility to implement requirements flow down lies with the Buyers Technical Representative (BTR) as described in TFC-BSM_CPR-C-05 which identifies the BTR as responsible to ensure deliverables and requirements are clearly defined. BTRs ensure company policies, procedures, and ISMS flow-down, and Safety, Procurement and Quality Assurance requirements are communicated to subcontractors and incorporated into their work efforts. BTRs are the authorized communication link between WRPS technical staff and the subcontractor to clarify questions, procedures, establish priorities, authorize overtime/accelerate progress and processes. BTRs work in concert with procurement specialists to develop new subcontracts and modify existing subcontracts to reflect changing scope and/or field conditions. Specific applications of this responsibility are contained in Section 4.0.

Document reviews and interviews determined that the flow-down of WRPS applicable contract requirements are usually listed in both blanket master agreements and statements of work for subcontractor activities Several minor examples of ineffective requirements flow-down were noted that were judged to have no significant impact. Several assessors evaluated the BMAs and SOWs developed by different contract requestors and BTRs and found no issues. Examples: Review of construction requisition 182095 and SOW; Requisition 00176418, *C-104 Engineering Design Support* and Contract Requisition 00180390; and *241-C-110 Waste Retrieval Systems Installation*. The TOC HASP and PAAA responsibilities are flowed down to the subcontractor as are requirements for a Chemical Management Plan, On-Site Work Provisions, and applicability to 10 CFR 851.

4.4 Functional Area: Subcontractor Management and Oversight / Objective #3

Objective:

Subcontractor management and oversight activities are supported by periodic interface with responsible subcontractor personnel, including observations of in-progress field work, corrective action management, records management, and notification and reporting.

Criteria/Requirements:

1. Subcontractor Oversight Plans are in place for all activities identified on the Subcontractor Oversight Plan screening forms, with the screening form results located in the Buyer Technical Representative (BTR) files.
2. Subcontractor oversight activities are captured on the integrated assessment schedule or project schedule, as appropriate (e.g., progress meeting participation, Management Observation Program (MOP) conduct, periodic monitoring of performance).
3. Oversight files are maintained for each subcontractor to document oversight activities and responses to any findings and issues.
4. Subcontractor Oversight Plans are maintained as quality records.

5. Subcontractor performance evaluation history files are reviewed by BTRs, as necessary, to ensure that opportunities to bid for work are provided to quality performers.
6. Findings and issues resulting from subcontractor oversight activities receive appropriate corrective actions that prevent recurrence.
7. The WRPS assessment process is applied to evaluate oversight of subcontractor performance, including hands-on work and field implementation of administrative and technical procedures and involve workers, supervisors, and managers.
8. Subcontractor oversight activities consider subcontractor knowledge of 10CFR851 requirements (such as worker rights, posting of worker rights, etc,).
9. Subcontractor oversight activities consider the effectiveness of reporting of non-compliances to 10CFR851 and PAAA.

Results

Conclusion Statement:

The objective and organizational structure that supports implementation of periodic interface with responsible subcontractor personnel, including observations of in-progress field work, corrective action management, records management, and notification and reporting was found to be less than adequate. There are three Findings and six Observations for this objective.

Discussion:

As detailed in this section, several issues were identified relating to implementation of subcontract oversight expectations. Contributing to these issues is inconsistent interpretations as to what constitutes a satisfactory subcontractor oversight plan. For example, interview results revealed the following interpretations:

a.) Completion of section II of the Subcontractor Oversight Plan form (Form A-6003-991, *Subcontractor Oversight Plan*) that identifies necessary oversight activities.
b.) Development of specific subcontractor oversight criteria that are to be implemented to support item a., and
c.) Generation of a detailed subcontractor oversight plan that is scheduled and implemented on a pre-determined frequency.

Subcontractor Oversight Plan (screening) forms (Form A-6003-991) have not been developed, or have been completed incorrectly, for many subcontracts as required in TFC-ESHQ-S_SAF-C-07, *Subcontractor Oversight*. Consequently, BTR coordination actions to ensure that subcontractor oversight coordination activities are defined and implemented are frequently not provided. This issue is identified as **Finding SO-F3**. It is recognized that considerable field oversight is performed, particularly in the industrial

safety area; however, there is no assurance that these oversight activities effectively support subcontract management and oversight. The following examples support the finding:

a. Many subcontracts/releases (15 of 34 based upon a sample by the assessment team) have not been screened to determine whether subcontractor oversight plans are necessary.
b. Subcontract oversight screening activities indicate a need for oversight of field activities for only 36 of 55 subcontracts involving field work (65%, as of February 2009), based upon a sample review by the Safety organization. Consequently, subcontract oversight plans and schedules have frequently not been implemented for subcontracts involving field work activities.
c. Feedback received during the assessment indicated that some personnel responsible for BTR activities incorrectly believed that subcontract activities implemented via the WRPS work control system did not require development of Subcontractor Oversight Plans.
d. In one instance, the 'subcontract oversight' function understanding by the responsible BTR was to review contractor invoices for budget and scope impact, rather than ESH&Q oversight of subcontractor activities.
e. Article 2.0 (Integration of Environment, Safety, Health and Quality (ESH&Q) Into Work Planning and Execution), Item 2.1.11 (General) of the WRPS On-Site Work Provisions states "Open and effective communication shall exist between the SUBCONTRACTOR and the Buyer's Technical Representative (BTR) to support the management of ESH&Q issues and initiatives." Though several BTRs were aware of this clause, they did not interpret the clause to encompass subcontract management and oversight.

Subcontractor oversight activities are not performed by the Environmental Programs organization as required by RPP-MP-003, *Integrated Environment, Safety, and Health Management System Description for the Tank Operations Contractor*, and TFC-ESHQ-S_SAF-C-07, *Subcontractor Oversight*. Consequently, Environmental Compliance personnel do not implement necessary environmental field activities. Current Environmental Surveillance checklists do not identify subcontractor oversight as within scope of Tank Farm facilities. This issue is identified as **Finding SO-F4**.

TFC-BSM-CP_CPR-C-05, *Procurement of Services*, establishes the process for which subcontractor oversight is identified through the development of procurement documents such as the Blanket Master Agreement (BMA) and Statement of Work (SOW). Several Contract Requisitions were noted to not identify subject matter experts (SMEs) in functional areas impacted by the work scope (e.g., Radiological Control, Environmental Programs, and Quality Assurance). TFC-BSM-CP_CPR-C-05, *Procurement of Services*, Section 4.3 Creating and Approving the Statement of Work requires involvement of SME and others, along with Attachment C of the procedure which functions as the tool the BTR can use. Improper approval routing misses the opportunity to ensure proper requirements are flowed down to the subcontractor via the Statement of Work. TFC-BSM-CP_CPR-C-05 provides a useful tool to identify necessary review and approval

SMEs on a 'Determination of Required Approvals' checklist; however, the Buyer Technical Representative and Contract Requestor incorrectly completed the checklist in several instances, resulting in a conclusion that SME approval of relevant Statements of Work was not necessary. This issue is identified as **Finding SO-F5**. Of ten Requisitions reviewed, five with potential ESH&Q impact (e.g., radioactive waste disposal activities, tank farm entries to support inspections) did not contain appropriate approvals. One example of not involving a relevant SME in the Statement of Work approval process (Radiological Control, reference Requisition 00182095) was identified recently in PER 09-0338 (task releases had not yet been issued on this Requisition). The four additional Requisitions are as follows:

Contract Number/ Requisition Number	Contract Scope	Relevant Functional Area SMEs Not Included in SOW Approval
36572 / 00175072	Tank Farm Inspection Services	Radiological Control
28005 / 00178835	ATL Hazardous Waste Treatment/ Disposal	Quality Assurance
28005 / 00178837	Tank Farm Hazardous Waste Treatment/ Disposal	Quality Assurance
36437 / 00176764	PNNL Support for ILAW Glass Testing	Radiological Control Environmental

There is little objective evidence of Environmental, Safety, or Radiological Control oversight being performed either as specific subcontractor oversight or as management observation program (MOP) walk downs or safety surveillances. Interviews with subcontractor staff at the ATCO shop and Vadose Zone project work indicated little presence by environmental, safety or radiological control staff performing oversight activities. A field walk-down of the ATCO shop by the assessment team on February 26, 2009 identified several instances of poor housekeeping. A contributing factor was that requirements for daily safety inspections had not been flowed down to construction subcontracts, though the Construction subcontractor safety professionals do perform safety inspections. When the ATCO shop storage conditions were observed by the assessment team, prompt action was taken by a WRPS safety professional in attendance and action was taken to capture this issue in the corrective action program (reference PER 09-0355). As described in the PER, contributing to the issue was that requirements for daily safety inspections had not been flowed down to construction subcontracts, though the Construction subcontractor safety professionals do perform safety inspections.

Subcontractor oversight expectations are developed and implemented through coordination with the BTR, contract requestor, and SME, and support by ESHQ SMEs to conduct the required oversight. Interviews and document reviews identified several subcontractor oversight plans indicating that planned oversight would consist of routine functional area surveillance activities already in place, with no specificity as to the relevant contract/release. Consequently, there is no assurance that the planned oversight activities would consider elements of the contract/release that may require oversight scope of a specialized nature, nor is there assurance that the specific subcontracts received the planned oversight. This issue is identified as **Observation SO-O7**. Though a considerable amount of field oversight activity is evident, particularly in the industrial safety area, it is virtually impossible to correlate the actual field work activities to specific subcontractor field activities.

Observation indicated the ATCO shop is presently in use by construction subcontractors, but there is no evidence of a "Formal Turnover" of the facility from WRPS to the subcontractor in accordance with the provisions of the Statement of Work (SOW) (reference Contract Requisition 00180390, *241-C-110 Waste Retrieval Systems Installation*). This issue is identified as **Observation SO-O8**. A review of the SOW finds the SOW vague regarding expectations the facilities being turned over to the subcontractors for work. If item 1.1 of the following text of the SOW is in need of revision, the revision should be processed:

Company Facilities

1.1 When the Company provides onsite facilities (i.e., office/administrative, storage, shop facilities and/or lavatory/sanitary facilities) and furnishings (i.e., refrigerators, stoves, microwaves, furniture), the Company will formally turnover the facility(ies) and furnishings to the Contractor.

The WRPS ESH&Q organization is responsible to provide subcontractor management support to the BTR by 1) communicating requirements, and 2) performing assessments, inspections, and/or surveillances to ensure compliance as discussed in TFC-ESHQ-S_SAF-C 07, *Subcontractor Oversight*. Success of the subcontractor oversight process is based upon the BTR, contractor requestor, and SME working together to ensure that subcontractor oversight is performed as needed and is performed effectively. Actions to screen subcontracts to determine the need for subcontractor oversight and to develop subcontractor oversight plans are performed as post-subcontract award activities via completion of the Subcontractor Oversight Screening form (Form A-6003-991). As an area for improvement, completion of the need for subcontractor oversight (via the subcontract oversight screening form completion) should be considered as a pre-award activity. Should the need for a revision to subcontract oversight be identified, particularly the scope and frequency of subcontractor oversight, a revision to the screening determination could be readily accommodated. If the decision is to retain the post-award determination, a time period following award needs to be specific to direct when the oversight screening activity should be completed. This issue is identified as **Observation SO-O9**.

Evaluation of Subcontractor Performance evaluations are not performed for some subcontracts that roll over year-to-year. Three interviewed BTRs with relevant contracts/releases confirmed that they do not complete the *Evaluation of Subcontractor Performance* evaluations at the end of the fiscal year. Since the contracts potentially never end, there is no trigger to perform this closure activity described in step 4.4 (Closure Oversight Activities) of TFC-ESHQ-S_SAF-C-07, *Subcontractor Oversight.* Consequently, evaluation documentation does not exist to support future subcontract choice considerations. Three interviewed BTRs with relevant contracts/releases confirmed that they do not complete the *Evaluation of Subcontractor Performance* evaluations at the end of the fiscal year. As an improvement opportunity, these evaluations should be completed at the Release level, rather than at the Subcontract level, since Releases are issued at least each year. This issue is identified as **Observation SO-O10**.

Several areas of improvement were identified for the Subcontractor Oversight Form (Form A-6003-991) to strengthen the determination process for subcontractor oversight (this issue is identified as **Observation SO-O11**):

a. To maintain process integrity, a suggested improvement opportunity is to implement one or both of the following recommendations:

    i. Require each of these functional area managers to concur with the screening results by signing in Section I (Oversight Plan Screening) of the form.
    ii. Provide concurrence ability in Passport for each of these managers regarding the need for subcontractor oversight plans in their respective functional area.

b. Section I of the Subcontractor Oversight Plan form should be modified to add a 'Yes/No' determination to the question "Does the work activity involve field work?", which should require increased ESH&Q scrutiny.

c. Sections I and II of the Subcontractor Oversight Plan form should be modified to require Form A-6003-991 to be attached to the Passport Comm Log when completed.

d. Section II of the Subcontractor Oversight Plan form requiring approval signatures by the relevant ESH&Q managers should be changed to require both the Manager – Industrial Safety and the Manager – Industrial Hygiene to approve, since subcontractor oversight plans may be required in one of these areas but not the other.

TFC-ESHQ-S_SAF-C-07, *Subcontractor Oversight* does not provide recommended subcontractor oversight frequency or depth of review. Some checklist considerations for scope are provided in Attachments A through D of the procedure for Safety and Health,

Radiological Control, Environmental and Quality Assurance, respectively; however, considerations such as prior site work by the subcontractor, the detailed nature of the work (especially for field activities), and potential vulnerability should the work not be performed safely and as planned should be considered when determining the oversight frequency and depth. This issue is identified as **Observation SO-O12**.

4.5 Functional Area: Document Control

Objective:

WRPS activities ensure that specified documents, either in hard copy or electronic media, including latest changes thereto, are controlled, reviewed for adequacy, approved for release, and distributed to and used at the location where the work is being performed.

Criteria/Requirements:

1. The following controls shall be applied to documents and changes thereto:

    - The identification of controlled documents
    - The specified distribution of controlled documents for use at the appropriate location
    - The identification of individuals responsible for the preparation, review, approval, and distribution of controlled documents
    - The review of controlled documents for completeness and approval prior to distribution, and a method to ensure the correct documents are being used.

2. Changes to documents, except minor changes, shall be reviewed and approved by the same organizations or technical disciplines that performed the original review and approval, unless other organizations (those affected by the change) are specifically designated.
3. The individuals reviewing document changes shall have access to pertinent document background data or information upon which to base their review and approval.
4. Minor changes to documents, such as inconsequential editorial corrections, shall not require that the revised documents receive the same review and approval as the original documents. The following are considered editorial changes:

    - Correcting grammar or spelling
    - Renumbering sections or attachments that do not affect the sequence of work
    - Changing the title or number of the document and updating organizational titles.

5. To avoid a possible omission of a required review, the type of minor changes that do not require such a review and approval, and the person who can authorize such a decision, shall be clearly delineated.

RESULTS

Conclusions/Summary:

The objective and organizational structure that supports document control either in hard copy or electronic media, including latest changes thereto, are controlled, reviewed for adequacy, approved for release, and distributed to and used at the location where the work is being performed was found to be adequate. Several improvement opportunities were identified to increase process efficiency and effectiveness. There are no Findings and three Observations for this objective.

Discussion:

TFC-PLN-02, *Quality Assurance Program Description*, Section 6.0 – Document Control was part of the CRAD for the assessment. Document changes of company procedures are under TFC-MD-061, *Transition of CH2M HILL Procedures and Administrative Documents to Washington River Protection Solutions* authorizing change for those procedures and administrative documents that require administrative changes to reflect the new contractual relationship between the TOC and the U.S. Department of Energy ORP.

Procedures that support the subcontractor oversight function provide several instances of conflicting direction. This issue is identified as **Observation SO-13**. In particular, TFC-ESHQ-S_SAF-C-07, *Subcontractor Oversight*, TFC-BSM-CP_CPR-C-05, *Procurement of Services* and TFC-BSM_CP_CPR-P-05, *Subcontract Closeout* are not well integrated to ensure that Buyer Technical Representatives, Contract Requestors and ESH&Q managers can perform their roles and responsibilities effectively and efficiently. For example:

a. Step 4.5 (Closure Oversight Activities) of TFC-ESHQ-S_SAF-C-07, *Subcontractor Oversight*, requires the Buyer Technical Representative and the Safety and Health, Environmental, Radiological Controls and Quality Assurance representatives to "Participate in/provide input to the subcontractor Evaluation of Subcontractor Performance." However, step 4.7 (Subcontract Closeout) of TFC-ESHQ-S_SAF-C-07 states to "Obtain input from the project team and complete the Evaluation of Subcontractor Performance for subcontracts/releases greater than $100K." In effect, conflicting direction exists for subcontracts/releases that are less than or equal to $100K. Also, the wording in TFC-BSM-CP_CPR-C-05, *Procurement of Services*, provides ambiguous direction for releases of a subcontract that individually would equal less than $100K but would result in a subcontract totaling greater than $100K.

b. Step 4.6 (Subcontractor Oversight Plan Changes) of TFC-ESHQ-S_SAF-C-07 requires the Buyer Technical Representative to "Maintain the subcontractor oversight plan in the BTR's file for the subcontractor.", with the Records Custodian identified as the "Contract Originator and/or assigned Buyer Technical Representative". However, TFC-BSM-CP_CPR-C-05 does not provide BTR file disposition direction; it states in Section 6.0 (Records) that the Records Custodian for "routine procurement files" is "Procurement".
c. Section 6.0 (Records) of TFC-ESHQ-S_SAF-C-07 identifies Subcontractor Oversight Plans as quality records. However, Section 6.0 (Records) of TFC-BSM-CP_CPR-C-05 identifies "routine procurement files" as non-quality records. If Subcontractor Oversight Plans are considered to be "routine procurement files", this direction is in conflict. If Subcontractor Oversight Plans are not considered to be "routine procurement files", there are no record requirements identified.
d. Step 4.7.3 (Subcontract Closeout) of TFC-BSM-CP_CPR-C-05 requires completion of the Evaluation of Subcontractor Performance form with accompanying "Evaluation Instructions". The Evaluation Instructions do not correlate to the Evaluation of Subcontractor Performance form contents. Also, configuration control should be implemented by processing the Evaluation of Subcontractor Performance form as a site form.
e. Step 4.5.1 of TFC-ESHQ-S_SAF-C-07 requires the BTR and ESH&Q personnel to "Participate in/provide input to the subcontractor Evaluation of Subcontractor Performance"; the procedure does not direct that the Evaluation of Subcontractor Performance be provided to the Procurement Specialist. Step 4.1.3 of TFC-BSM_CP_CPR-P-05, *Subcontract Closeout*, requires the Procurement Specialist to "Include copy of Evaluation of Subcontractor Performance in procurement file <u>if received</u> from BTR or Procurement Support". By default, the Evaluation of Subcontractor Performance would not be filed if not received.

TFC-BSM-CP_CPR-C-05, *Procurement of Services* is unclear as to whether documents identified in the procedure are to be treated as record material. This issue is identified as **Observation SO-14**. For instance:

a. Determination of Required Approval (DRA) forms provide no signature line (as expected for a record document); also, the form is not listed in section 6.0 (Records), but it is to be attached to the 'Passport Comm Log'.
b. The Workplace Substance Abuse Program (WSAP) form provides a signature line for the BTR, but then indicates "Original in BTR File" in that signature area. The procedure also instructs the BTR to attach the WSAP to Passport. Section 6.0 (Records) states that the Procurement Services organization is the records custodian for procurement files. It is not evident why a separate "BTR File" is needed, and why one copy goes into the Passport Comm Log and one into the BTR file.

c. Section 6.0 (Records) does not clearly indicate what items are records and where they are maintained as records. Is Procurement using Passport for records storage? Can a BTR use Passport for their "BTR file"?

During preparation activities for this assessment, a recent revision to TFC-ESHQ-S_SAF-C-07, *Subcontractor Oversight* Rev B-6, issued February 11, 2009 was found to have been processed incorrectly. The issue was captured in PER 09-0246 with the text as follows:

> Type of Procedure Change - Changes were made to this procedure regarding responsibilities for subcontractor oversight; however, the ADCA indicates this is a "minor revision". Changes made are beyond the scope of a "minor revision" as defined in the QAPD. TFC-PLN-02, *Quality Assurance Program Description*, defines a "minor change" as follows:
>
> > Minor changes to documents, such as inconsequential editorial corrections, do not require that the revised documents receive the same review and approval as the original documents. The following are considered editorial changes:
> >
> > 1) Correcting grammar or spelling
> > 2) Renumbering sections or attachments that do not affect the sequence of work
> > 3) Changing the title or number of the document
> > 4) Updating organizational titles.
> >
> > Training - The ADCA was completed to indicate "Classroom Training without Verification" would be given. However, this procedure was issued and effective February 11, 2009 without training provided to BTRs.
> >
> > Impacted Procedures - This procedure interfaces with TFC-BSM-CP_CPR-C-05, *Procurement Of Services*, and Form A-6003-991 (*Subcontractor Oversight Plan*). The ADCA did not indicate there were any impacted procedures, yet the changes would seem to require similar changes to the Procurement of Services procedure and possibly Form A-6003-991.

TFC-ESHQ-S_IH-C-02, *Hazard Communication*, provides an expectation to provide updated Right-to-know (RTK) information within 30-days of receipt of a new hazardous material. During this assessment, the RTK station supporting the recently re-occupied ATCO building was identified as having outdated RTK information. Follow up provided verbal input that "new inventory sheets are being worked on"; however, good business practice would provide for issuance of updated RTK information prior to building re-occupancy. A previous weakness with RTK information not being in place at several work areas/facilities was identified in PER 08-1312 (categorized as a PER/RES, identified during the 10CFR851 Worker Safety and Health Independent Assessment in

June 2008). Corrective action did not provide an extent-of-condition evaluation of other facilities, such as the ATCO shop, but instead focused on evaluation of migration to a paperless system.

TFC-ESHQ-ENV_AP-D-01, *Environmental Oversight of Subcontractors*, was cancelled in June 2006; however, the document is still listed as a company level guidance document in TFC-PLN-73, *Environmental Protection and Compliance Plan*, and should be replaced with TFC-ESHQ-S_SAF-C-07, *Subcontractor Oversight*. This issue is identified as **Observation SO-O15**.

4.6 Functional Area: Records Management

Objective:

WRPS activities ensure that the requirements for the generation, classification, storage, and maintenance of documents designated as quality assurance (QA) records are implemented.

Criteria/Requirements:

1. Records shall be identified, generated, authenticated, maintained, and their final disposition specified. Requirements and responsibilities for these activities shall be documented.
2. Requirements and responsibilities for record transmittal, distribution, retention, maintenance, and disposition shall be established and documented.
3. Records shall be distributed, handled, and controlled in accordance with written procedures.
4. Records shall be traceable to associated items and activities and accurately reflect the work accomplished or information required.
5. Individuals handling records shall protect them from damage, determination, or loss until the records are submitted to the records management system.
6. Records shall be stored in facilities, containers, or a combination thereof, constructed and maintained in a manner which minimizes the risk of damage or destruction.

RESULTS

Conclusions/Summary:

The objective that supports records management for the generation, classification, storage, and maintenance of documents designated as quality assurance (QA) records was found to generally be adequate. There is one Finding and one Observation for this objective.

Discussion:

Record retention requirements for Subcontractor Oversight Plan (screening) forms (Form A-6003-991) and scheduling requirements for subcontractor oversight activities are not implemented as described in TFC-ESHQ-S_SAF-C-07, *Subcontractor Oversight*. This issue is identified as **Finding SO-F6**. Specifically:

a. Section 6 (Records) of TFC-ESHQ-S_SAF-C-07 identifies that Subcontractor Oversight Plan (screening) forms (Form A-6003-991) are to be maintained as quality records. Interviewed Buyer Technical Representatives, responsible to implement the record retention were not aware of the quality record expectation. Contributing to this issue is an absence of direction within the procedure to implement the record retention requirement.

b. Step 4.2.3 (Post-Award Oversight Activities) of TFC-ESHQ-S_SAF-C-07 requires subcontractor oversight activities to be placed on the (WRPS) integrated assessment schedule or project schedules. Though subcontractor oversight activities are sometimes scheduled on department-level schedules, use of the integrated assessment schedule or project schedules is not implemented. As a suggested corrective action, the scheduling procedure requirement should provide increased flexibility as to the schedule means, allowing use of department schedules or tracked as E-STARS Tasks.

Passport is not recognized as a document 'record' database. TFC-BSM-IRM_DC-C-02, *Records Management*, recognizes documents maintained as records in approved TFC Records Storage Areas (RSAs), the Document Service Centers (DSCs), the Records Holding Areas (RHA), or electronically stored in the Integrated Document Management System (IDMS), but is silent on the Passport database. TFC-BSM-IRM_DC-C-02 should clearly indicate the status of Passport regarding records retention. Interviews with procurement personnel determined that Passport retains information that may be considered to be record material. This issue is identified as **Observation SO-O16**.

ATTACHMENT A
PERSONNEL CONTACTED

Name	Title	Interview	Entrance Meeting	Exit Meeting
Anderson, CE	Technical Specialist, Security & Emergency Services/Events Investigation (PAAA), ESH&Q		X	X
Armstead, M	Manager – Prime Contracts, Business Operations	X		
Beranek, F	Manager – ESH&Q	X		X
Berman, HS	Manager - Engineering		X	
Bowman, TA	Operations Support Specialist, Safety & Health, ESH&Q	X		
Brown, RL	Performance Assurance/Corrective Action, ESH&Q		X	X
Burt, DL	Manager - EVMS Cert & Assurance, Project Integration	X		
Butler, RE	Safety URSWA, Construction and Commissioning, Project Integration	X		
Calderon, LM	Technical Specialist, Industrial Safety, Safety & Health, ESH&Q	X		X
Colosi, KA	Manager - IHLW Program, WTP Support	X		
Conrad, JS	Environmental Specialist, Environmental programs, ESH&Q	X		
Farner, ML	Construction and Commissioning, Project Integration			X
Flasch, MP	Performance Assurance/Corrective Action, ESH&Q		X	X
Flowers, LA	Safety Specialist – IS/IH, ESH&Q Business Operations, Base Operations	X		
Gaydosh, WL	Manager – Industrial Safety, ESH&Q	X		
Hatcher, KA	Manager – Procurement Services, Business Operations	X		
Janecke, JR	Procurement Specialist, Procurement Services, Business Operations	X	X	
Keith, LJ	Manager – Training, Workforce Resources	X		
Kubie, DL	Training Specialist, Training, Workforce Resources		X	
Kummer, DA	Training Specialist, Training, Workforce Resources	X		
Le, TM	Health Physicist, Radiological Controls, ESH&Q	X		
Lepka, SJ	Administrative Specialist - Project Controls, WTP Support	X		

ATTACHMENT A
PERSONNEL CONTACTED

Name	Title	Interview	Entrance Meeting	Exit Meeting
Lesko, AC	Manager - Records & Document Control, Business Operations	X		
Lesko, KF	Manager – Construction and Commissioning, Project Integration	X	X	
Lindholm, MA	Manager – SST Retrieval and Closure		X	
Maciuca, C	Manager – Performance Assurance/Corrective Action, ESH&Q		X	
Marshall, D	Accountant, Finance, Business Operations	X		
Martin, LK	Operations Specialist, Project Construction, Base Operations	X		X
May, SM	Project Cost Analyst, Project Controls, SST Retrieval and Closure	X		
McElroy, ML	Manager – Quality Assurance Services, ESH&Q	X		X
McLellan, GW	Manager - Project Management Systems, Project Integration	X		
Meyers, S	EFSI, Quality Assurance	X		
Netolicky, RA	Quality Assurance Engineer, Quality Assurance Services, ESH&Q	X		
Penick, LR	Operations Support Specialist, Performance Assurance/Corrective Action, ESH&Q	X	X	X
Peters, NL	Technical Specialist, Security & Emergency Services/Events Investigation, ESH&Q	X		
Powers, MJ	Safety Specialist, Safety/IH, ESH&Q Single-Shell Tank, SST Retrieval & Closure	X		
Reynolds, KD	EFSI, Sampling And Well Services	X		
Robinson, JM	Manager – Procurement Services, Business Operations	X	X	
Rolph, JT	Manager – Radiological Controls, ESH&Q	X		
Sax, SM	Manager – Project Operations		X	
Schaleger, JP	Safety Specialist, Industrial Safety, ESH&Q	X		
Silvia, MJ	Performance Assurance/Corrective Action, ESH&Q		X	X
Stickney, RG	Engineer, Central Design Authority and Standards, Engineering	X		
Stredwick, JR	Construction and Commissioning, Project Integration	X		

ATTACHMENT A
PERSONNEL CONTACTED

Name	Title	Interview	Entrance Meeting	Exit Meeting
Sydnor, H	Scientist, Operations Support – Vadose, SST Retrieval & Closure	X		
Taber, TK	Operations Support Specialist, Industrial Safety, ESH&Q	X		
Tifft, SR	Environmental Specialist, Environmental Compliance, ESH&Q	X		
Vacca, JE	Manager – Information Resources, Business Operations	X		
Van Meighem, JS	Technical Specialist – Interface Management, Project Integration	X		
Voogd, JA	Manager - Environmental Compliance, ESH&Q	X		
Wooley, TA	Environmental Specialist, Environmental Compliance, ESH&Q	X		
Zane, RW	Energy Solutions, Industrial Safety	X		

ATTACHMENT B
DOCUMENTS REVIEWED

- DOE Order 414.1C, *Quality Assurance*, approved 06-17-05
- 10CFR830, Subpart A, *Quality Assurance Requirements*
- INPO 05-002, *Human Performance Tools for Engineers – Practices for Anticipating, Preventing, and Catching Engineering Errors* (Vendor Oversight section)
- WRPS Contract DE-AC27-08RV14800, Modification No. M009, Section B, *Supplies or Services and Prices/Costs* and Section J-6, *Small Business Subcontracting Plan*
- Administrative Interface Agreement for Training Records Under Memorandum of Agreement No. CHG-FMOA-2001
- Interface Control Document between The Tank Farm Contractor and the Fluor Hanford Water Utilities Distribution System
- Washington River Protection Solutions LLC and Energy Solutions Federal Services LLC Affiliate Agreement for the DOE Tank Operations Contract #DE-AC-27-08RV14800
- Washington River Protection Solutions LLC and URS-Washington Division Affiliate Agreement for the DOE Tank Operations Contract #DE-AC-27-08RV14800
- Memorandum of Agreement MOA-WRPS-CHPRC-2008, Rev. 0, *Performance and Payment of Services*
- Memorandum of Agreement TOC-MOA-FH-0004, Rev. 0, *Performance and Payment of Services*
- Memorandum of Agreement TOC-MOA-PNNL-0002, Rev. 0, *Performance And Payment Of Services*
- Request for Offsite Services, Job No.29633_FY 2009 ROS No. 36472-03, *Characterize The Aerial Extent Of Mobile Contaminants For Placement Of Interim Barrier Using The Hydraulic Hammer Unit*
- Statement Of Work, Requisition #: 36472, *Drilling and Related Characterization Services*, Revision Number 0,Date September 9, 2008
- Subcontractor Oversight Plan for Contract Requisition 182012, dated 02/10/2009, *Design and Fabrication of Mobile Retrieval Arm System*
- *Audits/Surveillances,* DWO-QAP-001, dated 5/15/06, revision 9 Energy Solutions Condition Report FW-TSV-XR-08-003
- Energy Solutions Federal Services Internal Memo, Quality Assurance Internal Surveillance Report FS-08-IS-002, *Safety Surveillance of Energy Solutions Employee Performance at UPR 81*
- Energy Solutions Federal Services, Internal Memo CAM-08-4955, Quality Assurance Internal Surveillance Report FS-08-IS-001, *Completion Document for 241-UDirect Push Characterization Services*
- Energy Solutions Surveillance Report FS-08-IS-001, dated January 9, 2008, *Completion Document for 241-U Farm Direct Push Characterization Services*
- Energy Solutions Surveillance Report FS-08-IS-002, dated April 15, 2008, *Safety Surveillance of Energy Solutions Employee Performance at UPR-81*
- RPP-MP-003, Rev. 5c, *Integrated Environment, Safety, and Health Management System Description for the Tank Farm Contractor*
- RPP-8411, Rev. 1, *Washington River Protection Solutions Procurement Process Description*

ATTACHMENT B
DOCUMENTS REVIEWED

- *Training Implementation Matrix Per DOE Order 5480.20A*, Rev. 20A-3 dated September 2005
- *FY2009 – WRPS Integrated Assessment Schedule*, dated January 12, 2009
- 24590-WTP-PL-MG-01-001, Rev. 2, *Interface Management Plan* (WTP)
- *Washington River Protection Solutions Parent Organization Support Plan FY 2009*, approved August 29, 2008
- *Washington River Protection Solutions (WRPS) General Provisions*, dated November 20, 2008
- *Washington River Protection Solutions (WRPS) Commercial General Provisions*, dated November 20, 2008
- *Washington River Protection Solutions (WRPS) On-Site Work Provisions*, dated February 10, 2009
- *Washington River Protection Solutions Evaluated Supplier List*, dated October 28, 2008 (including the *Fluor Hanford Evaluated Supplier List*, dated February 13, 2009)
- HNF-MP-5184, Rev. 7, *Washington River Protection Solutions Radiation Protection Program*
- TFC-PLN-02, Rev. E-2, *Quality Assurance Program Description*
- TFC-PLN-43, Rev. A-13, *Tank Operations Contractor Health and Safety Plan*
- TFC-PLN-47, Rev. B-2, *Worker Safety and Health Program*
- TFC-PLN-55, Rev. A-2, *Industrial Hygiene Safety Management Program Plan*
- TFC-PLN-58, Rev, C, *Chemical Management Plan*
- TFC-PLN-73, Rev. B-5, *Environmental Protection and Compliance Plan*
- TFC-PLN-83, Rev. B, *Assurance System Program Description*
- TFC-PLN-102, Rev. A, *TOC Interface Management Plan*
- TFC-POL-16, Rev. B, *Integrated Safety Management System Policy*
- TFC-BSM-AC-C-04, Rev. B-4, *Intercompany Work Exchange Agreements*
- TFC-BSM-CP_CPR-C-02, Rev. A-11, *Noncompetitive Procurement Justification*
- TFC-BSM-CP_CPR-C-05, Rev. H-4, *Procurement of Services*
- TFC-BSM-CP_CPR-C-06, Rev. G-4, *Procurement of Items (Materials)*
- TFC-BSM-CP_CPR-C-09, Rev. B-13, *Supply Chain Process*
- TFC-BSM-CP_CPR-C-17, Rev. A-5, *Interface Management*
- TFC-BSM-CP_CPR-D-02-10, Rev. A-4, *Construction Contracting*
- TFC-BSM-CP_CPR-D-02-13, Rev. A-2, *Services from Other Hanford Prime Contractors*
- TFC-BSM-CP_CPR-D-04.1, Rev. A-2, *Good Subcontract Administration Practices*
- TFC-BSM-CP_CPR-D-04.5, Rev. A-4, *Subcontract Termination*
- TFC-BSM-CP_CPR-D-05.1, Rev. A-4, *Close-out Process*
- TFC-BSM-CP_CPR-D-16, Rev. B, *Preparation, Negotiation, Administration, and Completion of Performance Based Incentives*
- TFC-BSM-CP_CPR-P-04, Rev. A-10, *Subcontract Administration*
- TFC-BSM-CP_CPR-P-05, Rev. B-3, *Subcontract Closeout*
- TFC-ESHQ-S_SAF-C-07, Rev. B-6, *Subcontractor Oversight*
- TFC-ESHQ-Q_ADM-C-01, Rev. A-3, *Graded Quality Assurance*

ATTACHMENT B
DOCUMENTS REVIEWED

- TFC-ESHQ-Q_ADM-C-09, Rev. A-3, *Supplier Quality Assurance Program Evaluation*
- TFC-ESHQ-Q_PP-P-02, Rev. D-3, *Quality Assurance Surveillances*
- TFC-PRJ-CM-C-01, Rev. A-13, *Construction Management*
- TFC-PRJ-CM-C-05, Rev. A-3, *Construction Subcontractor Progress Meetings*
- TFC-PRJ-CM-C-08, Rev. B-2, *Construction Completion and Turnover*
- TFC-PRJ-CM-C-015, Rev. A-1, *Construction Subcontractor Closeout*
- Form A-6003-991, Rev. 06/05, *Subcontractor Oversight Plan* (Screening Form)
- Key Word Search 'Interface' of the Problem Evaluation Request Database for the 3-Year Period Ending January 30, 2009
- Key Word Search 'Oversight' of the Problem Evaluation Request Database for the 3-Year Period Ending January 29, 2009
- Key Word Search 'Subcontractor' of the Problem Evaluation Request Database for the 3-Year Period Ending January 29, 2009
- *Independent Assessment of Worker Safety and Health Program, FY2008-CH2M-I-0005, dated June 24, 2008*
- *PAAA Program Review/Self Assessment, Management Assessment Report FY2008-SHQ-M-0159*, dated May 29, 2008
- *Subcontractor Oversight Process,* Management Assessment, FY2007-SHQ-M-0135 dated March 26, 2007
- *Interface Program – Management Assessment Report FY2006-SPPC-M-0150*, dated September 26, 2006
- *CH2M HILL Corporate Independent Assessment of CHG Hanford Tank Farm Activities*, dated January 13, 2006
- *Contractor Reporting of Non-Compliances, Management Assessment FY2006-PAAA-M-0156*, dated December 28, 2005
- *QA Management Assessment of Subcontractor/Vendor QA Implementation Plans – FY2006-QA-M-0122*, dated December 21, 2005
- *Management Assessment of Contractor Flow Down of Requirements*, FY2005-PA-M-0175, dated June 5, 2005
- *River Protection Project Quality Assurance Audit Report RPP-A-02-09, Revision 0, Construction Quality Requirement Flow-Down and Subcontractor Oversight*, dated November 25, 2002

Ownership matrix

TABLE OF CONTENTS

1.0 PURPOSE AND SCOPE 2
2.0 IMPLEMENTATION 2
3.0 RESPONSIBILITIES 2
3.1 Contract Requestor 2
3.2 Safety & Health, Environmental, Quality Assurance, and Radiological Controls 2
4.0 PROCEDURE 3
4.1 Pre-Award Oversight Activities 3
4.2 Post Award Oversight Activities 5
4.3 Mobilization Oversight Activities 5
4.4 Ongoing Oversight Activities 6
4.5 Closure Oversight Activities 8
4.6 Subcontractor Oversight Plan Changes 8
5.0 DEFINITIONS 8
6.0 RECORDS 8
7.0 SOURCES 9
7.1 Requirements 9
7.2 References 9

TABLE OF FIGURES

Figure 1. Subcontractor Oversight Process. 11

TABLE OF TABLES

Table 1. Safety And Health Risk Screening Criteria. 12

TABLE OF ATTACHMENTS

ATTACHMENT A – SAFETY AND INDUSTRIAL HEALTH CHECKLIST 14
ATTACHMENT B – RADIOLOGICAL CONTROL CHECKLIST 15
ATTACHMENT C – ENVIRONMENTAL CHECKLIST 16
ATTACHMENT D – QUALITY ASSURANCE CHECKLIST 17

1.0 PURPOSE AND SCOPE
(7.1.1, 7.1.2, 7.1.3, 7.1.4, 7.1.5.b, 7.1.6, 7.1.8, 7.1.9, 7.1.10, 7.1.11, 7.1.12)

Oversight of subcontractor safety, health, radiological control, environmental, and Quality Assurance (QA) ensures compliance with the Tank Operations Contractor requirements. These requirements are contained in TFC-PLN-43 (Tank Operations Contractor Health and Safety Plan), RPP-MP-003 (Integrated Environment, Safety, and Health Management System Description for the Tank Operations Contractor), TFC-PLN-55 (Industrial Hygiene Safety Management Program Plan), TFC-PLN-47 (Worker Safety and Health Program), HNF-MP-5184 (Radiation Protection Program), TFC-PLN-73 (Environmental Protection and Compliance Plan), TFC-PLN-02 (Quality Assurance Program Description), and On-Site Work Provisions, as applicable.

This procedure describes the methods and assigns responsibilities for obtaining buy in to the WRPS programs for, developing, monitoring, and evaluating: subcontractor safety, health, radiological, environmental, and quality requirements and programs by Washington River Protection Solutions LLC (WRPS) for subcontracted and Recovery Act (RA) work. This procedure does not apply to staff augmentation contracts.

2.0 IMPLEMENTATION

This procedure is effective on the date shown in the header.

3.0 RESPONSIBILITIES

3.1 Contract Requestor

The contract requestor ensures the general site and project-specific safety, health, radiological, environmental, and quality requirements are included in the contract or statement of work.

3.2 Safety & Health, Environmental, Quality Assurance, and Radiological Controls
(7.1.5.a, 7.1.14)

The ESH&Q Manager is responsible for the Subcontractor Oversight program and establishing ownership and clear roles and responsibilities within the disciplines of the ESH&Q organization. Safety & Health, Environmental, Quality Assurance, and Radiological Controls personnel are jointly responsible for identifying required subcontractor oversight activities and providing those requirements to the buyer's technical representative (BTR) as specified below. When required, they will develop a Subcontractor Oversight plan and provide it to the BTR and Procurement for transmittal to the Subcontractor.

Safety & Health personnel are responsible for defining and resolving safety and health issues; providing evaluations of hazards; and verifying compliance with TFC-PLN-43, TFC-PLN-47, TFC-PLN-55, and RPP-MP-003.

Environmental personnel are responsible for identifying and resolving environmental issues and performing surveillances to verify subcontractor compliance with TFC-PLN-73. (7.1.13)

QA personnel are responsible for defining QA issues and performing surveillances and assessments of subcontractor QA programs and implementation, per TFC-PLN-02.

Radiological Controls personnel are responsible for defining radiological issues and performing surveillances and assessments of subcontractor radiological programs and implementation, per HNF-MP-5184.

Procurement personnel are responsible for communicating all information/findings produced by WRPS oversight activities to the subcontractor for appropriate action and subsequently relaying subcontractor activities/corrective actions to the oversight organizations.

4.0 PROCEDURE

Figure 1 provides an overview of the subcontractor oversight process.

4.1 Pre-Award Oversight Activities

Verification and Approval, an oversight process, may also be implemented by the TOC to ensure that these robust processes are being followed. Deliverables identified in the SOW are reviewed and surveillance activities identified to verify implementation of program requirements flowed down **from** the contract. QA personnel perform surveillances and assessments of subcontractor QA programs and implementation and monitor subcontractor QA compliance in accordance with any subcontractor oversight plans. (7.1.2.b)

Contract Requestor and Buyer's Technical Representative	1. Determine the involvement by other organizations (i.e., Safety & Health, QA, Environmental, and Radiological Controls).
Contract Requestor; Buyer's Technical Representative; Safety & Health, Environmental, and Radiological Controls Representatives; and Quality Assurance Engineer	2. Analyze the scope of work to identify safety, health, environmental, radiological, and quality oversight actions. a. Review the project master submittal list, statement of work, contract, construction specifications, On-Site Work Provisions , etc., as applicable. b. Determine the risk each impacted discipline will experience due to the work activity(s). c. See Table 1 for risk screening criteria for S&H.
Safety and Health Representative	3. Review/validate the Subcontractor ESH&Q Representation form submitted by potential subcontractors. (Reference TFC-BSM-CP_CPR-P-02.) NOTE: If the Subcontractor ESH&Q Representation of projected awardee is not acceptable, the potential subcontractor may be required to present a corrective action plan and increased oversight by the appropriate ESHQ representatives will be written into the oversight plan.

Contract Requestor

4. Complete the Subcontractor Oversight Plan (A-6003-991) screening Section I to determine if a subcontractor oversight plan is required.

   a. If a formal subcontractor oversight plan is not required, sign the form indicating that no subcontractor oversight plan is required and exit this procedure.

      Send the form to the BTR and procurement specialist for inclusion in Comm. Log

   b. Notify the BTR a subcontractor oversight plan is required.

   c. Receive the contract requisition for review and approval.

Contract Requestor; Safety & Health, Environmental, and Radiological Controls Representatives; and Quality Assurance Engineer

5. Prior to the contract award develop the subcontractor oversight plan. The plan is developed with a graded approach dependent on the work complexity and risk levels.

   NOTE: For RA work, Oversight Plans are required and activities documented on Field Surveillance forms

Contract Requestor; Safety & Health, Environmental, and Radiological Controls Representatives

   a. List the safety, health, environmental, and radiological control oversight activities as applicable to Statement of Work in Section II of the Subcontractor Oversight Plan (A-6003-991). See Attachments A, B, and C.

   b. Consider uniqueness of work, familiarization with tank farms, whether the work is RA scope, whether there are lower tier subcontractors anticipated, and risk level to determine depth and frequency of the oversight plan.

   c. Obtain discipline-specific approvals in Section II.

Contract requestor; Quality Assurance Engineer

   d. Identify supplier QA oversight activities for each QL-1 or QL-2 contract/release issued after contract award (see Attachment D) in Section II of the Subcontractor Oversight Plan (A-6003-991) taking into consideration:

      - Review and approval of deliverables identified in the Statement of Work.

      - Surveillance activities to verify implementation of program requirements flowed down in the contract per TFC-ESHQ-Q_PP-P-02.

      - Surveillance activities to verify implementation of Subcontractor Quality Assurance Program Implementation Plan (if used), per TFC-ESHQ-Q_ADM-C-09.

e. Obtain QA manager/lead approvals in Section II.

f. Send electronic version of completed subcontractor oversight plan to BTR.

4.2 Post Award Oversight Activities

Contract Requestor Safety & Health, Environmental, and Radiological Controls Representatives; and Quality Assurance Engineer

1. Develop an oversight file for each subcontractor and maintain the plan documentation of all oversight activities and responses to any findings and issues.

   - Safety & Health personnel set up their file in accordance with this procedure.
   - Environmental personnel set up their file in accordance with RPP-ENV-32852.
   - Radiological Controls personnel set up their file in accordance with TFC-ESHQ-AP-C-03.
   - Quality Assurance Engineers set up their file in accordance with TFC-ESHQ-Q_PP-P-02 and TFC-ESHQ-Q_ADM-C-09.

Contract Requestor; Buyer's Technical Representative; Safety & Health, Environmental, and Radiological Controls Representatives; and Quality Assurance Engineer

2. Attend the pre-construction (or pre-work) conference (optional for service contracts) (see TFC-PRJ-CM-C-02).

4.3 Mobilization Oversight Activities

Safety & Health Representative(s)

1. Walk down the jobsite where the work is to be performed to facilitate development of a work site hazard analysis (A-6004-101) or safety plan (A-6004-102). The hazard analysis will contain: (7.1.1, 7.1.7)

   - Foreseeable hazards and planned protective measures
   - Further hazards revealed by supplemental site information
   - Drawings or other documentation of protective measures where OSHA would require a professional engineer or other qualified professional
   - Listing of competent persons by name, where required for workplace inspections of the construction activity.

Manager or Manager Representative	2.	Ensure that employee job task analyses for subcontractor personnel have been approved by the subcontractor personnel and project Industrial Hygienist.
Safety & Health, Environmental, and Radiological Controls Representatives; and Quality Assurance Engineer	3.	Ensure that training and qualification requirements identified in the statement of work, the work site hazard analysis or safety plan, and the employee job task analyses have been met by the subcontractor personnel, as applicable to the discipline.
Environmental Representative	4.	Document any areas of environmental concern in the left hand column of the Environmental Subcontractor Surveillance Form (A-6003-262), and provide a copy to the project manager and subcontractor.
Quality Assurance Engineer	5.	Ensure that any Subcontractor Quality Assurance Program Implementation Plan actions are completed as required per TFC-ESHQ-Q_ADM-C-09.

4.4 Ongoing Oversight Activities

Safety & Health Representatives

1. Review the subcontractor's daily safety inspection records.

2. Review monthly reports submitted in accordance with On Site Work Provisions, Section 2.5, Reporting and Record Keeping.

3. Monitor the subcontractor's compliance with the safety and health requirements during the period of performance.

   a. Provide oversight of the work planning process and work site hazard analysis of the subcontract project.

   b. Ensure the subcontractor conducts daily inspections of the work site and identifies hazards and instances of non-conformance with safety and health requirements.

   c. Conduct field oversight in accordance with the subcontractor oversight plan for discipline-specific activities.

      1) Accompany the subcontractor's safety representative on his/her daily work site safety inspections at the frequency noted in the subcontractor Safety and Health oversight plan.

      2) Order the subcontractor to stop work if serious or repeated violations occur.

         NOTE: Work will not be allowed to progress until suitable action has been taken.

a) Stop work in an emergency, when life or property is threatened. In such situations, the shift office shall be notified and the Procurement Specialist shall confirm the action in writing and make sure the proper notifications and documentation are completed and copies included in the project file.

b) Ensure that the subcontractor safety representative has submitted all incident forms and safety reports, as required, and that they have been distributed, as applicable.

3) Document oversight findings and evaluation of potential trends on a Problem Evaluation Request in accordance with TFC-ESHQ-Q_C-C-01.

4. Ensure that safety discrepancies, required corrective actions, and discrepancies that cannot be immediately corrected are documented by the subcontractor safety representative in his/her daily inspection reports.

5. Document in writing discrepancies identified that cannot be addressed immediately during oversight plan implementation, and send them to the Procurement Specialist.

Procurement Specialist

6. Send all documented discrepancies to the subcontractor

a. Instruct the subcontractor to respond in writing with the disposition and completion date.

b. Submit all subcontractor communications regarding corrective actions to the appropriate oversight group.

Safety & Health Representatives

7. For construction subcontractors, review the subcontractor safety and health performance with the subcontractor safety and health representative at the construction subcontractor progress meeting (see TFC-PRJ-CM-C-05).

Radiological Controls Representative

8. Conduct Management Observation Program (MOP) reviews by defining a plan, conducting MOPs in accordance with TFC-ESHQ-AP-C-03, and document findings in a Problem Evaluation Request in accordance with TFC-ESHQ-Q_C-C-01.

Environmental Representative

9. Monitor subcontractor environmental compliance in accordance with the subcontractor oversight plan and RPP-ENV-32852.

Quality Assurance Engineer

10. Monitor subcontractor QA compliance in accordance with the subcontractor oversight plan and TFC-ESHQ-Q_PP-P-02.

4.5 Closure Oversight Activities

Buyer's Technical Representative, Safety & Health, Environmental, and Radiological Controls Representatives; and Quality Assurance Engineer	1.	Participate in/provide input to the subcontractor Evaluation of Subcontractor Performance.
	2.	Ensure exposure monitoring and other reports (e.g., noise, chemical, dosimetry monitoring, environmental monitoring, inspection reports, etc.) are closed out as applicable.
Buyer's Technical Representative and Safety & Health Representatives	3.	Determine subcontractor exit requirements (e.g., employee job task analysis, medical monitoring, exit physicals, etc.) are completed as applicable. See Check-in/Check-out form.

4.6 Subcontractor Oversight Plan Changes

Buyer's Technical Representative	1.	Notify the Safety and Health, Environmental, Radiological Controls, and Quality Assurance Engineers as appropriate when the Scope of Work is modified.
Safety & Health, Environmental, and Radiological Controls Representatives; and Quality Assurance Engineer	2.	When a change to the subcontractor oversight plan is needed due to recognition of a new hazard or change in work scope, provide an update of the oversight plan to the BTR and procurement.
Buyer's Technical Representative	3.	Insert any revisions to the subcontractor oversight plan in the PassPort comm log for the subcontract.

5.0 DEFINITIONS

Contract Requestor. Manager or Control Account Manager with budget authority to authorize work.

6.0 RECORDS

The following records are generated during the performance of this procedure:

Record Description	Vital Record Y/N	QA Record Y/N	QA Record Retention L/NP	NARA Retention Schedule	Other Retention Requirements	Records Custodian
Subcontractor Oversight Plan (A-6003-991)	N	Y	NP	ADM-17.32.a	N/A	Procurement

The identified record custodian is responsible for record management in accordance with TFC-BSM-IRM_DC-C-02.

7.0 SOURCES

7.1 Requirements

1. 10 CFR 851, "Worker Safety and Health Program."

2. HNF-MP-5184, "CH2M HILL Hanford Group, Inc. Radiation Protection Program."

3. NTS-RP-CHG-TANKFARM-2000-0014, "Management and Independent Assessment," Corrective Action 02.

4. RPP-PLAN-39433, "Procurement, Construction, and Acceptance Testing Plan," Section 4.0, "Construction Management."

5. RPP-PLAN-39434, "Construction and Acceptance Testing Program."

   a. Section 5.1, "Verification and Approval."
   b. Section 5.2, "Acceptance Testing Plans and Procedures."

6. RPP-MP-003, "Integrated Environment, Safety, and Health Management System Description for the Tank Operations Contractor."

7. TFC-ESHQ-S_SAF-C-02, "Job Hazard Analysis."

8. TFC-PLN-02, "Quality Assurance Program Description."

9. TFC-PLN-10, "Assessment Program Plan."

10. TFC-PLN-43, "Tank Operations Contractor Health and Safety Plan."

11. TFC-PLN-47, "Industrial Safety and Health Management Program Plan."

12. TFC-PLN-55, "Industrial Hygiene Safety Management Program Plan."

13. TFC-PLN-73, "Environmental Protection and Compliance Plan."

14. TFC-PLN-91, "Industrial Safety Management Program Plan."

7.2 References

1. HNF-5183, "Tank Farm Contractor Radiological Control Manual."

2. On-Site Work Provisions.

3. RPP-ENV-32852, "Environmental Surveillance/Compliance Inspection Process Checklist."

4. TFC-BSM-CP_CPR-C-05, "Procurement of Services."

5. TFC-BSM-CP_CPR-P-02, "Solicitation Process."

6. TFC-BSM-CP_CPR-P-03, "Selection and Award."

7. TFC-BSM-CP_CPR-P-04, "Subcontract Administration."

8. TFC-ESHQ-AP-C-03, "Management Observation Program."

9. TFC-ESHQ-Q_ADM-C-01, "Graded Quality Assurance."

10. TFC-ESHQ-Q_ADM-C-09, "Supplier Quality Assurance Program Evaluation."

11. TFC-ESHQ-Q_C-C-01, "Problem Evaluation Request."

12. TFC-ESHQ-Q_PP-P-02, "Quality Assurance Surveillances."

13. TFC-OPS-MAINT-C-01, "Tank Operations Contractor Work Planning."

14. TFC-PRJ-CM-C-01, "Construction Management."

15. TFC-PRJ-CM-C-02, "Construction Preconstruction Conference."

16. TFC-PRJ-CM-C-05, "Construction Subcontractor Progress Meetings."

Figure 1. Subcontractor Oversight Process.

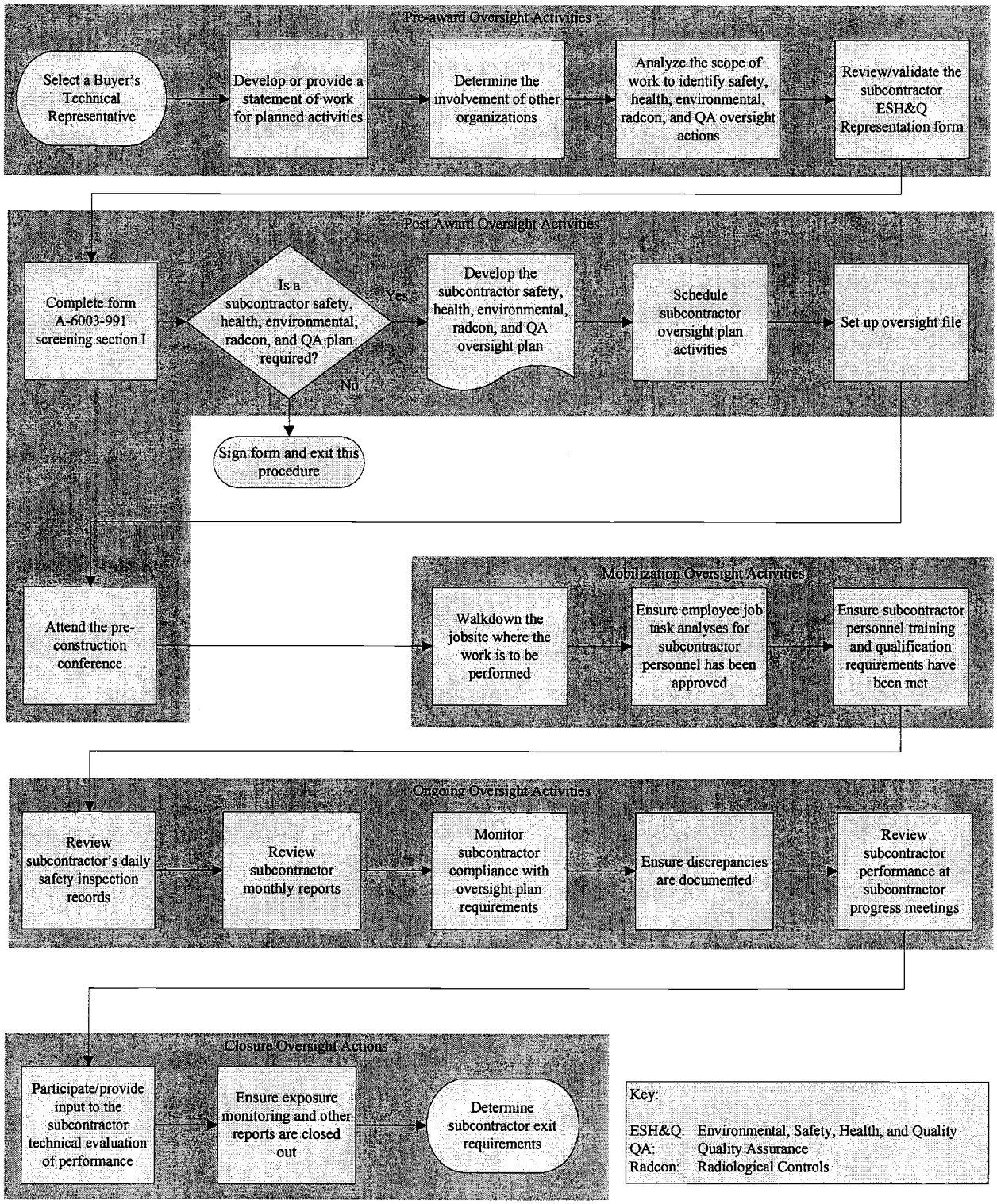

Table 1. Safety And Health Risk Screening Criteria.

The following table is provided for specific work activities that may present an increased risk of injury or bodily harm when hazards cannot be mitigated, whenever a hazard can be controlled or eliminated the risk category for that particular hazard is lessened or eliminated. Safety and Health review and oversight is required when these thresholds of activities are met.

Industrial Safety Hazard Class	
1. Walking/Working Surfaces	- Work surfaces that have unprotected holes or openings where there is a drop > 4 feet - Un-barricaded openings in walls or guardrails where there is a drop > 4 feet - Every work platform, without toe boards, > 5 feet in height where tools or material can fall to a lower level
2. Electrical Work	Work on energized systems > 50 volts
3. Confined Spaces	Confined Space Work
4. Elevated Work	- Work requiring fall protection equipment (PFAS) - Work requiring engineered fall protection
5. Hoist & Rigging	- Hoist and rigging activities adjacent to medium or high risk work sites - Hoist and rigging work requiring a Special or Critical Lift Plan
6. Excavations, digging, trenching	- Excavations over 5' in depth where personnel will use a trench box and/or shoring All excavations where workers will be digging within 2' feet of buried utilities, with ground scans
7. Energy	- Work on pressurized systems: Air > 35 psi Temperature > 200F Fluids > 500 #
8. Work Zones	- Work location known to contain harmful insects, rodents, reptiles that cannot be controlled - Work involving demolition of structures - When working alone in remote locations with limited means of communication - Work in locations where lighting conditions are inadequate and incapable of improvement - Work outdoors during periods of snow and ice accumulation, or wind conditions above 25 mph
9. Temperature Extremes	- Work in hot environments that require 1 layer of protective clothing - Extended work in cold work environments

Table 1. Safety And Health Risk Screening Criteria. (cont.)

The following table is provided for potential work activity exposures that may present an increased risk of illness when the exposure cannot be mitigated.

Potential Work Activity Exposure	Work Inside Vapor Control Zones Tank Waste Disturbing Activities Use of Respiratory Protection Use of Hearing Protection Asbestos Beryllium Silica Carcinogens Solvents Heavy Metals (i.e. lead, chromium, cadmium, nickel, arsenic, cobalt, copper, mercury, silver) Welding/Cutting

ATTACHMENT A – SAFETY AND INDUSTRIAL HEALTH CHECKLIST

The following checklist is not all-inclusive. Items should be added or deleted where they do not apply; however, careful considerations should be given to each item and a conscious decision made to include items to ensure adequate subcontractor oversight. Refer also to OSHA standards and the on-line ESH&Q manual for the procedures and standards that may apply.

	Safety and Health Program
	Personal protective equipment
	Flammable and combustible materials
	Hand and portable powered tools
	Hand tools and equipment
	Portable power operated tools and equipment
	Powder actuated tools
	Lockout/tagout procedures
	Confined spaces
	Electrical
	Walking-working surfaces (e.g., general, walkways, floor and wall openings, stairs and stairways, elevated surfaces)
	Hazard communication
	Emergency response procedures
	Excavation, trenching, and shoring
	Responding and reporting injuries, illnesses, and accidents
	Respirator protection
	Heat stress control
	Ergonomics
	Hearing conservation program
	Lead control program
	Fall protection
	Hoisting and rigging
	Job hazard analysis
	Portable ladders
	Transportation safety
	Safety inspections
	Concrete and masonry construction
	Erecting steel structures
	Safety signs, tags, barriers, and color coding
	Safety showers and eyewash stations
	Receiving, storing and handling of chemicals
	Storing, using, handling, and transporting compressed and liquefied gases
	Personal and area monitoring
	Safety meetings

ATTACHMENT B – RADIOLOGICAL CONTROL CHECKLIST

The following checklist is not all-inclusive. Items should be added or deleted where they do/do not apply; however, careful considerations should be given to each item and a conscious decision made to include items to ensure adequate subcontractor oversight. Refer also to HNF-MP-5184, HNF-5183, and applicable Radiological Control procedures and standards that may apply.

	ALARA
	Work planning
	Source control
	Radiation generating devices
	Conduct of radiological operations
	Pre-job briefing

ATTACHMENT C – ENVIRONMENTAL CHECKLIST

The following checklist is not all-inclusive. Items should be added or deleted where they do not apply; however, careful considerations should be given to each item and a conscious decision made to include items to ensure adequate subcontractor oversight. Refer also to TFC-PLN-73 and the on-line ESH&Q manual for additional environmental procedures and standards that may apply.

	Environmental permits
	Environmental monitoring
	Environmental requirements
	Potential environmental impacts
	Equipment labeling
	Equipment condition
	Equipment calibration stickers
	Equipment tests

ATTACHMENT D – QUALITY ASSURANCE CHECKLIST

The following checklist is not all-inclusive. Items should be added or deleted where they do not apply; however, careful considerations should be given to each item and a conscious decision made to include items to ensure adequate subcontractor oversight. Refer also to TFC-PLN-02 and the on-line ESH&Q manual for QA procedures and standards that may apply.

	Design items and processes use sound engineering/scientific principles and appropriate standards.
	Incorporation of applicable requirements and design bases in design work and design changes.
	Control and identification of design interfaces.
	Independent verification and validation of design product adequacy.
	Design verification and validation prior to approval and implementation of the design.
	Documents used to describe processes, specify requirements, or establish design are being properly prepared, reviewed, approved, and revised.
	Records are being properly specified, prepared, reviewed, approved, and maintained.
	Work is being performed by trained, qualified, and proficient personnel.
	Processes are being used that detect and prevent quality defects.
	Items, services, and processes that don't meet established requirements are identified, controlled, and corrected.
	Work is being performed consistent with technical standards, administrative controls, and other hazard controls.
	Items are being controlled to ensure their proper use.
	Items are being maintained to prevent damage, loss, or deterioration.
	Equipment used for process monitoring or data collection is being properly maintained and calibrated.
	Procured items and services meet established requirements.
	Sub-tier suppliers are selected based on specified criteria.
	Documents used to describe processes, specify requirements, or establish design are properly prepared, reviewed, approved, and revised.
	Processes exist for identifying items, services, and processes needing improvement.
	Correction of problems and work includes action to prevent recurrence.
	Processes exist to ensure sub-tier suppliers continue to provide acceptable items and services.

WHY Analysis

Record retention requirements for Subcontractor Oversight Plan (screening) forms and scheduling requirements for subcontractor oversight activities are not implemented as described in TFC-ESHQ-S_SAF-C-07, Subcontractor Oversight.

Why

Each BTR has a different approach for maintaining records applicable to a contract

WHY

Some BTRs only develop SOW's infrequently, contents of their records vary based on experience and training.

WHY

Guidance from procurement and safety has only been provided in initial BTR training, and training of record retention aspects were minimal.

WHY

Organizational changes left gaps in communication links with BTRs and new information.

Save

Problem Evaluation Request (PER)

WRPS-PER-2009-0478
In Process/Work

PER No	Date of Discovery	Time of Discovery (24:00)	Project
WRPS-PER-2009-0478	03/27/2009	10:00	Procurement

Location

All Tank Farms

How Was Problem Discovered

Independent Assessment

Description of Concern or Problem

An Independent Assessment of Subcontract Management and Oversight was conducted from February 23 through March 5, 2009. The assessment resulted in six findings and sixteen observations. Details are provided in the attached assessment report.

Observation SO-O1 As an area for improvement, development and implementation of a qualification card process, would assist in ensuring that personnel assigned to perform the Buyer Technical Representative function possess the requisite training and experience to perform the function effectively.

Requirement Not Satisfied	Source Document Number
	FY2009-WRPS-I-0002
Equipment Identification Number	**System Identification**

Immediate actions Taken or Planned

Discussed the issue with the Manager - Procurement Services and the Manager - Training.

Recommended Corrective actions

Recommend assignment to JM Robinson (Procurement Services).

Originator Contact

No

Originators Name	Originators ID	Originators Phone	Date Initiated
Flasch, Michael P	H5610828	(509) 373-4473	03/27/2009

SHIFT OPERATIONS REVIEW

Title

Independent Assessment of Subcontract Management and Oversight - Observation SO-O1

How Discovered	Agency
self-ID prior to event	

Reportability	SSC Operability	Operability Review	Comp Measures Req
Non-Reportable	N/A	N/A	

Describe actions Taken or Recommended

No additional actions taken or recommended by BO SSM

SO Reviewer Name	SO Reviewer ID	SO Reviewer Phone	SO Review Date
Malhan, Rakesh	H0046812	(509) 373-2689	03/27/2009

SCREENING

PER Significance Level	
PIE/CIM	

Independent Assessment Review	Occurrence Report Number	Externally Identified	
Yes		No	
Assigned Responsible Manager	**Facilities Rep / SSO**	**Safety Management Rep**	
Robinson, John M			

Program	Safety Management Program

• N/A	• Training

PER Screening Comments
No comments (Nancy Brown 03/30/09)

Causal Code			
MGT/Comm/Train	**Human Performance**	**GEMS**	**Equip/Eng/Other**
Failed Barrier	**ORPS Code**	**Functional Area**	**Work Process**
	Not Applicable	Sub-Contractor	• Assessments • Subcontractor Oversight
ISMS	**Consequence Code**		
Provide feedback and continuous improvement	• Qualification Requirements Not Met - Person performed activity without meeting qualification requirements		
PER Screening Chair	**PER Screening Chair ID**	**PER Screening Chair Phone**	**PER Screening Date**
Brown, Nancy L	H0088797	(509) 373-0992	03/30/2009

PAAA REVIEW			
PAAA Screening	**PAAA Codes**	**Function Codes**	
Not subject to PAAA			
NTS Report Number	**NTS Report Date**		
Repetitive / Recurrent	**Programmatic**	**Intentional Violation / Misrepresentation**	
No	No	No	

PAAA Screening Comments		
PAAA Reviewer Name	**PAAA Review Date**	
Waters, Shaun F	03/30/2009	
PAAA Approver Name	**PAAA Approve Date**	
Anderson, Craig E	04/01/2009	

CAUSE ANALYSIS
Description of Occurrence
Extent of Condition
Safety Significance
Generic Implications
Remedial Corrective Action
Causal Analysis, Apparent Cause and/or Root Cause Analysis

CORRECTIVE ACTIONS		
Actionee	**Action Due Date**	**E-STARS Number**
Janecke, J (Rick)	10/29/2009	WRPS-PER-2009-0478.1

Action

With assistance of the training organization develop a BTR training program that results in the completion of a qualification card process.

Corrective Action Attachments

- FW_ PER 2009-0478_1.msg
- Link to PER
- PER 2009-0478_1 and 0479_2.msg
- Subcontractor Mgt Oversight IA Report.pdf

PIE/CIM

Evaluation of PIE/CIM Initiative

Development and implementation of a qualification card process, will assist in ensuring that personnel assigned to perform the Buyer Technical Representative (BTR) function possess the requisite training and experience to perform the function effectively.

Training and procurement are working together to develop the qualification card process that is the subject of this PER. It is anticipated that the qualification card will either be two levels or two separate qualification card. The levels will allow for entry level BTR's and senior BTR's.

The qualification card process is being jointly developed by procurement and training. The individual representing training will be on board effective 5/18/09.

ATTACHMENTS

Link to PER

Subcontractor Mgt Oversight IA Report.pdf

AUDIT HISTORY

Change Date	Auditor	Comments
03/30/2009 08:20	Owen, Annette	'Source Document Number Available' was changed.
03/31/2009 08:25	Brown, Nancy L	Responsible Manager Task Launched by Brown, Nancy L
05/18/2009 15:03	Glaman, Linda R	Corrective actions Launched by Glaman, Linda R
07/27/2009 14:39	Glaman, Linda R	Change to Cause Analysis screen/Corrective Action plan.
07/27/2009 14:40	Glaman, Linda R	Extend CA .1 per attached email request. LBG 7-27-09 I need to extend this PER to October 29, 2009. The class and qualification card I am developing with training will not be complete until that time. Thanks, Rick Janecke 7-27-09
07/30/2009 13:17	Glaman, Linda R	Change to Cause Analysis screen/Corrective Action plan.

-- End of Report --
08/06/2009 05:54 PM

Task# WRPS-PER-2009-0478

E-STARS[R] Report
Task Detail Report
08/06/2009 1755

TASK INFORMATION			
Task#	WRPS-PER-2009-0478		
Subject	PIE; Independent Assessment of Subcontract Management and Oversight - Observation SO-O1		
Parent Task#		**Status**	Open
Reference		**Due**	11/14/2009
Originator	^PER Coordinator	**Priority**	Medium
Originator Phone		**Category**	PER
Origination Date	03/27/2009 1106	**Generic1**	None
Remote Task#		**Generic2**	None
Deliverable	PER Review	**Generic3**	None
Class	None	**View Permissions**	Global
Instructions	*No Instructions*		

ROUTING LISTS

1	Corrective actions Routing Lis	Active
	To launch Corrective actions.	
	• ^PER CAs - Assign - Awaiting Response - Due Date - 11/10/2009 0000 *Instructions:*	
2	Responsible Manager	Inactive
	Evaluate suggestion, enter comments and required actions on PIE/CIM tab of the PER. Disposition in accordance with TFC-ESHQ-Q_C-C-01, Problem Evaluation Request.	
	• Robinson, John M - Assign - Completed with comments - 05/14/2009 1737 *Instructions:* ↳ *Routing List:* Route List - Inactive *Instructions:* • Janecke, J (Rick) - Assign - Completed with comments - 05/14/2009 1420	
	• ^Independent Assessment Review(Penick, Lee R) - Review - Concur - 05/18/2009 1016 *Instructions:* Independent Assessor Review	
3	Review Initial PER	Inactive
	Review New PER	
	• ^SO(Malhan, Rakesh) - Review - Concur - 03/27/2009 1544 *Instructions:*	
	• ^PER Screening(Brown, Nancy L) - Review - Concur - 03/30/2009 1432 *Instructions:*	
	• ^Mgr Review - Review - Cancelled - 03/31/2009 0825 *Instructions:*	

ATTACHMENTS

Attachments	1. Link to PER 2. Subcontractor Mgt Oversight IA Report.pdf

COMMENTS

Task# WRPS-PER-2009-0478

Poster	Janecke, J (Rick) - 05/14/2009 1420
	Completed
	Development and implementation of a qualification card process, will assist in ensuring that personnel assigned to perform the Buyer Technical Representative (BTR) function possess the requisite training and experience to perform the function effectively. Training and procurement are working together to develop the qualification card process that is the subject of this PER. It is anticipated that the qualification card will either be two levels or two separate qualification card. The levels will allow for entry level BTR's and senior BTR's. The qualification card process is being jointly developed by procurement and training. The individual representing training will be on board effective 5/18/09.
Poster	Robinson, John M - 05/14/2009 1737
	Completed
	Recommendation provided for by the PER initiator has been evaluated. A qualification card process is being jointly developed by procurement and training and the training develop process will commence in June 2009.
Poster	^PER Coordinator (Glaman, Linda R) - 07/27/2009 1440
	Due Date Extension
	Extend CA .1 per attached email request. LBG 7-27-09 I need to extend this PER to October 29, 2009. The class and qualification card I am developing with training will not be complete until that time. Thanks, Rick Janecke 7-27-09

TASK DUE DATE HISTORY

Modified	07/27/2009 1440 - ^PER Coordinator	**New Due Date**	11/14/2009 0000
Modified	05/18/2009 1503 - ^PER Coordinator	**New Due Date**	08/23/2009 0000
Modified	05/18/2009 1503 - ^PER Coordinator	**New Due Date**	08/19/2009 0000
Modified	03/31/2009 0825 - ^PER Coordinator	**New Due Date**	05/26/2009 1630
Modified	03/31/2009 0825 - ^PER Coordinator	**New Due Date**	05/30/2009 1630
Modified	03/27/2009 1106 - ^PER Coordinator	**New Due Date**	03/29/2009 1630

SUB TASK HISTORY

Subtask#	WRPS-PER-2009-0478.1				
Subject	WRPS-PER-2009-0478; PIE; With assistance of the training organization develop a BTR training program				
Originator	^PER CAs				
	Routing List	Corrective Action			
		Assignee	Janecke, J (Rick)	**Response**	
		Assignee	Robinson, John M	**Response**	
		Assignee	^Independent Assessment Review	**Response**	

-- end of report --

Washington River Protection Solutions LLC
Independent Assessment
of
Subcontract Management and Oversight

February 23 to March 10, 2009

Final Report Rev. 0
FY2009-WRPS-I-0002

washington **river**
protection solutions

Approved: _____
M. J. Silvia,
Team Lead

Team Members:

R. L. Brown	3-30-09 Date
M. P. Flasch	03/30/09 Date
L. R. Penick	3/30/09 Date

TABLE of CONTENTS

1.0 INTRODUCTION 1
2.0 PURPOSE AND SCOPE 1
3.0 EXECUTIVE SUMMARY 2
4.0 ASSESSMENT RESULTS 7
4.1 Functional Area: Interface Management 7
4.2 Functional Area: Subcontractor Management and Oversight / Objective #1 9
4.3 Functional Area: Subcontractor Management and Oversight / Objective #2 15
4.4 Functional Area: Subcontractor Management and Oversight / Objective #3 17
4.5 Functional Area: Document Control 23
4.6 Functional Area: Records Management 27

ATTACHMENTS

ATTACHMENT A - PERSONNEL CONTACTED 29
ATTACHMENT B - DOCUMENTS REVIEWED 32

ACRONYMS

AIA	Administrative Interface Agreement
BMA	Blanket Master Agreement
BTR	Buyer's Technical Representative
DOE	Department of Energy
EJTA	Employee Job and Task Analysis
ESH&Q	Environmental, Safety, Health, and Quality
ESRB	Executive Safety Review Board
ESL	Evaluated Suppliers List
FY	Fiscal Year
ICWEA	Intercompany Work Exchange Agreements
ISMS	Integrated Safety Management System
MOP	Management Observation Program
MOU	Memorandum of Agreement
PAAA	Price Anderson Amendment Act
PER	Problem Evaluation Request
POC	Point of Contact
QA	Quality Assurance
ROS	Request for On-site Services
RTK	Right to Know
SME	Subject Matter Expert
SOW	Statement of Work
TOC	Tank Operations Contractor
WRPS	Washington River Protection Solutions
WSHP	Worker Safety and Health Plan

1.0 INTRODUCTION

The Washington River Protection Solutions LLC *Quality Assurance Program Description*, TFC-PLN-02, requires that independent assessments be conducted to evaluate the performance of work processes with regard to requirements, customer expectations, and efforts to achieve the mission and goals of the organization. From February 23, 2009 through March 10, 2009, an independent assessment was conducted of the Washington River Protection Solutions management systems that implement the subcontract management and oversight processes. The assessment was led by Mr. Michael J. Silvia, with support from Performance Assurance personnel Robert L. Brown, Michael P. Flasch, and Lee R. Penick. This report documents the assessment details and results of the areas evaluated.

2.0 PURPOSE AND SCOPE

The purpose of this independent assessment was to evaluate the effectiveness of implementation of processes that support subcontract management and oversight. Assessment scope was as follows:

- Interface Management
  - Interfaces are effectively identified, documented, communicated and implemented with other Hanford Site Prime Contractors, as well as with other external contractors and companies.
- Subcontract Management and Oversight
  - Subcontract management and oversight activities are performed by knowledgeable WRPS personnel in accordance with well-defined and documented process expectations.
  - Subcontract management and oversight activities are supported by effective flow-down of requirements to the subcontractors.
  - Subcontract management and oversight activities are supported by periodic interface with responsible subcontractor personnel, including observations of in-progress field work, corrective action management, records management, and notification and reporting.
  - The WRPS Quality Assurance program is employed effectively to support subcontract management and oversight activities.

This assessment was performed in accordance with Washington River Protection Solutions procedure TFC-ESHQ-AP-C-02, *Independent Assessments*.

3.0 EXECUTIVE SUMMARY

The Independent Assessment of subcontract management and oversight was conducted February 23, 2009 through March 10, 2009. Though personnel resources and procedural direction are in place to provide Environment, Safety, Health and & Quality oversight of subcontracts, the subcontract oversight process needs significant improvement in both program content and implementation. The assessment team concluded the following:

a. The mission and organizational structure that supports interface management to ensure identification, documentation, and communication was found to be adequate and effective at present time.
b. Functional leadership for, and knowledge of, personnel performing the subcontractor oversight function, and effective implementation of the subcontractor oversight expectations, are less than adequate.
c. Flow-down of requirements to the subcontractors was found to be adequate and effective.
d. Implementation of periodic interface with responsible subcontractor personnel, including observations of in-progress field work, corrective action management, records management, and notification and reporting was found to be less than adequate.
e. Document control and records management practices were determined to generally be adequate, the exception being maintenance of subcontractor oversight screening documentation as quality records. Several improvement opportunities were identified to increase process efficiency and effectiveness.

This assessment resulted in six findings and sixteen observations, as follows; the details for each are provided in the body of the report.

Findings:

SO-F1 Programmatic ownership and responsibility for success of the subcontract oversight function have not been established. Guiding Principle 1 of RPP-MP-003, *Integrated Environment, Safety, and Health Management System Description for the Tank Farm Operations Contractor*, establishes expectations for processes to provide clear roles and responsibilities. **(WRPS-PER-2009-0472)**

SO-F2 Assessment activities have not been performed over the past several years to ensure that implementation of the subcontractor management and oversight process is achieving its desired objective. Core Function 5 (Provide Feedback and Continuous Improvement) of Integrated Safety Management as described in RPP-MP-003, *Integrated Environment, Safety, and Health Management System Description for the Tank Farm Operations Contractor*, establishes expectations for feedback and continuous process improvement. **(WRPS-PER-2009-0473)**

SO-F3 Subcontractor Oversight Plan (screening) forms (Form A-6003-991) have not been developed, or have been completed incorrectly, for many subcontracts as required in TFC-ESHQ-S_SAF-C-07, *Subcontractor Oversight*. **(WRPS-PER-2009-0474)**

SO-F4 Subcontractor oversight activities are not performed by the Environmental Programs organization as required by RPP-MP-003, *Integrated Environment, Safety, and Health Management System Description for the Tank Operations Contractor*, and TFC-ESHQ-S_SAF-C-07, *Subcontractor Oversight*. **(WRPS-PER-2009-0475)**

SO-F5 Buyer Technical Representatives and Contract Requestors have incorrectly determined in several instances that Subject Matter Expert (SME) approval of relevant Statements of Work (SOW) was not necessary. For example, approval by the Radiological Control organization was not identified for several inspection field work activities to be performed within Tank Farms. Contributing to this issue was incorrect determination by the Buyer Technical Representatives and Contract Requestors as to the need for some of the SMEs to approve the SOWs. This is identified as ineffective implementation of step 4.3.19 (Creating and Approving the Statement of Work) of TFC-BSM-CP_CPR-C-05, *Procurement of Services*, to determine the required SOW approvals. **(WRPS-PER-2009-0476)**

SO-F6 Record retention requirements for Subcontractor Oversight Plan (screening) forms and scheduling requirements for subcontractor oversight activities are not implemented as described in TFC-ESHQ-S_SAF-C-07, *Subcontractor Oversight*. **(WRPS-PER-2009-0477)**

Observations:

SO-O1 As an area for improvement, development and implementation of a qualification card process, would assist in ensuring that personnel assigned to perform the Buyer Technical Representative function possess the requisite training and experience to perform the function effectively. **(WRPS-PER-2009-0478)**

SO-O2 As an area for improvement, development, staffing and implementation of a limited size core group of personnel to perform all Buyer Technical Representative (BTR) functions has potential to increase both efficiency and effectiveness of the BTR role. **(WRPS-PER-2009-0479)**

SO-O3 Training and awareness of Buyer Technical Representatives regarding their functional roles and responsibilities for subcontractor oversight are less than adequate. **(WRPS-PER-2009-0480)**

SO-O4 Personnel performing Buyer Technical Representative (BTR) responsibilities achieve authorization to perform the function, and are listed on the Procurement web site; however, there is no requirement to receive re-authorization if personnel have not recently performed BTR responsibilities. **(WRPS-PER-2009-0481)**

SO-O5 The *Training Implementation Matrix per DOE Order 5480.20A* dated September 2005 needs to be revised to reflect the correct 'Compliance Reference' for 'Subcontractor Personnel Qualification'. Specifically, Table 2 (General Requirements Matrix), Chapter 1 (General Requirements), Section 3 (Subcontractor Personnel Qualification) references the compliance reference document as TFC-BSM-CP_CPR-C-03, *Buyer's Technical Representative Process*; however, this procedure was cancelled in April 2007, with the key elements incorporated into TFC-BSM-CP_CPR-C-05, *Procurement of Services*. **(WRPS-PER-2009-0482)**

SO-O6 A comprehensive assessment of the integration, procedural direction, and implementation of the WRPS procurement processes has not been performed since calendar year 2002. **(WRPS-PER-2009-0483)**

SO-O7 Subcontractor oversight plan documentation was observed indicating that planned oversight would consist of routine functional area surveillance activities already in place, with no specificity as to the relevant contract/release. Consequently, there is no assurance that the planned oversight activities would consider elements of the contract/release that may require oversight scope of a specialized nature, nor is there assurance that the specific subcontracts received necessary oversight. **(WRPS-PER-2009-0484)**

SO-O8 Observation indicated the ATCO shop is presently in use by construction subcontractors, but there is no evidence of a "Formal Turnover" of the facility from WRPS to the subcontractor in accordance with the provisions of the Statement of Work (reference Contract Requisition 00180390, *241-C-110 Waste Retrieval Systems Installation*). **(WRPS-PER-2009-0485)**

SO-O9 As an area for improvement, actions to screen subcontracts to determine the need for subcontractor oversight and to develop subcontractor oversight plans per TFC-ESHQ-S_SAF-C-07, *Subcontractor Oversight*, should be performed as subcontract pre-award activities rather than as post-award activities. Also, there is no timeframe specified to complete the subcontract oversight screening activity or to develop subcontract oversight plans. **(WRPS-PER-2009-0486)**

SO-O10 *Evaluation of Subcontractor Performance* evaluations are not performed for some subcontracts that roll over year-to-year.
(WRPS-PER-2009-0487)

SO-O11 Several areas of improvement were identified for the Subcontractor Oversight Form (Form A-6003-991) to strengthen the determination process for subcontractor oversight. For example:

a. Approval documentation for functional area managers responsible for subcontract oversight activities needs to be strengthened.
b. Subcontract activities involving field work do not receive particular emphasis for oversight activity.

(WRPS-PER-2009-0488)

SO-O12 TFC-ESHQ-S_SAF-C-07, *Subcontractor Oversight* does not provide recommended subcontractor oversight frequency or depth of review.
(WRPS-PER-2009-0489)

SO-O13 Procedures that support the subcontractor oversight function provide several instances of conflicting direction. In particular, the following procedures are not well integrated to ensure that Buyer Technical Representatives, ESH&Q managers, and Contract Requestors can perform their roles and responsibilities effectively and efficiently:

a. TFC-ESHQ-S_SAF-C-07, *Subcontractor Oversight*
b. TFC-BSM-CP_CPR-C-05, *Procurement of Services*
c. TFC-BSM_CP_CPR-P-05, *Subcontract Closeout*

(WRPS-PER-2009-0490)

SO-O14 TFC-BSM-CP_CPR-C-05, *Procurement of Services* is unclear as to whether the following documents identified in the procedure are to be treated as record material:

a. Determination of Required Approval (DRA) forms
b. Workplace Substance Abuse Program (WSAP) form

(WRPS-PER-2009-0491)

SO-O15 TFC-ESHQ-ENV_AP-D-01, *Environmental Oversight of Subcontractors*, was cancelled in June 2006; however, the document is still listed as a company level guidance document in TFC-PLN-73, *Environmental Protection and Compliance Plan*, and should be replaced with TFC-ESHQ-S_SAF-C-07, *Subcontractor Oversight*.
(WRPS-PER-2009-0492)

SO-O16 Passport is not recognized as a document 'record' database. TFC-BSM-IRM_DC-C-02, *Records Management*, recognizes documents maintained as records in approved TFC Records Storage Areas, Document Service Centers, Records Holding Areas, or electronically stored in the Integrated Document Management System, but is silent on the 'record' determination for the Passport database. **(WRPS-PER-2009-0493)**

4.0 ASSESSMENT RESULTS

The purpose and scope of the assessment were presented at the entrance meeting conducted on February 23, 2009. During the performance of the assessment, periodic assessment team meetings were held to apprise responsible personnel of assessment issues and overall progress. Final assessment results were presented at an exit meeting on March 10, 2009.

The approach used during the assessment consisted of interviews and document reviews, with limited field observation due to the nature of the assessment. Attachment A provides a listing of personnel contacted during the assessment; Attachment B provides a listing of documents reviewed in support of the assessment.

4.1 Functional Area: Interface Management

Objective:

Interfaces are effectively identified, documented, communicated and implemented with other Hanford Site Prime Contractors, as well as with other external contractors and companies.

Criteria/Requirements:

1. Formal intercompany work exchange agreements (ICWEA) are in place between Washington River Protection Solutions LLC (WRPS) and affiliate companies to perform work without fee.
2. Work performed under ICWEAs is approved and authorized.
3. Memorandum of Agreement documents are in place to describe the business management agreements between WRPS and other contractors for the performance and payment of services.
4. Interface agreements are in place, as necessary, to support formal commitments with other Hanford Site Prime Contractors. (Physical system interfaces are controlled via an Interface Control Document, while administrative interfaces are controlled via an Administrative Interface Agreement.)
5. Statements of Work are applied, as necessary, to define the scope, safety, quality, and technical requirements for services that are provided for a discrete transfer of funds.
6. The WRPS assessment program is implemented to monitor the effectiveness of the interface management processes and implementation of safety, environmental, radiological, and quality requirements stated in interface documents.

RESULTS

Conclusion Statement:

The mission and organizational structure that supports interface management to ensure identification, documentation, and communication was found to be adequate and effective at present time. A management assessment is scheduled to review the status of interface documents and validate previous gap analysis to ensure contractual commitments and interfaces are being addressed. There are no Findings or Observations for this objective.

Discussion:

Project Integration consists of five organizations with each having a unique function and responsibility. New to tank farms under the prime contract is Interface Management. The function of this organization is to develop documents that assist with the integration of Hanford Site requirements either shared or provided by new and existing prime contractors under the Department of Energy offices.

Intercompany work exchange agreements (ICWEA) are a subset of the documents that are used to describe services and material request between affiliates, prime contractors, and subcontractors performing work for Washington River Protection Solutions LLC (WRPS). Interface Management will manage the program that communicates, establishes policy and assist in the development of documents for prime contract interfaces points established by each of the respective prime contracts. These documents consist of Memorandum of Agreements (MOA), Interface Control Documents (ICDs), and Administrative Interface Agreements (AIA), while ICWEA documents (blanket master agreement (BMA), request for on-site services (ROS), statement of work (SOW), etc) are controlled and issued by the Procurement Services and Prime Contract.

The processes established under company policies, plans, and procedures require approvals and authorization of ICWEA prior to work commencing. TFC-PLN-102, *TOC Interface Management Plan* outlines the requirements in the Contract related to the Interface Management function and defines the execution/portfolio management strategy the TOC will apply to meet these requirements and support the line management projects. The implementing document for interface management is TFC-BSM-CP_CPR-C-17, *Interface Management.* Interface Management has recently completed the development and updates of prime contract MOAs. The process of developing other interface management documentation to implement formal commitment related to the cooperative transfer of material, energy, or data across company boundaries is on going and tracked by Interface Management.

The Interface Management plan and procedure outline the basic roles, responsibilities and process for the program and development of required documentation. As the program and process progress over the next six to twelve months, focus on areas such as program ownership, field implementation responsibilities, and contractor oversight will need to be

integrated. The roles listed in the plan for interface owner and associated point of contact (POC) will need to flow-down to the procedure level and may need expanding. Assessments, meetings, and issue tracking and resolution will provide feedback on where improvements could be needed in the future.

4.2 Functional Area: Subcontractor Management and Oversight / Objective #1

Objective:

Subcontract management and oversight activities are performed by knowledgeable WRPS personnel in accordance with well-defined and documented process expectations.

Criteria/Requirements:

1. Buyer Technical Representatives (BTRs) and Contract Requestors understand their subcontractor oversight roles and responsibilities, as follows:

    a. BTRs have completed the necessary training and qualification.
    b. BTRs provide technical direction/clarification to the subcontractor to ensure performance of all elements in accordance with the statement of work without placing emphasis on schedule or cost to the detriment of quality, safety, or the environment.
    c. BTRs provide internal coordination of, and interface with, the subcontractor regarding various technical requirements, such as the following:

        i. quality assurance
        ii. safety, health
        iii. Security and Emergency Services
        iv. protective forces
        v. environmental
        vi. Price-Anderson Amendments Act, and
        vii. ISMS principles applicable to the performance of the Contract pursuant to Tank Operations Contract implementing procedures.

2. For subcontracts, BTRs and Contract Requestors ensure subcontract personnel have training and qualifications commensurate with the responsibilities.
3. Roles and responsibility for personnel managing and performing the subcontractor oversight function are clearly established and are implemented effectively.

RESULTS

Conclusion Statement:

Functional leadership for, and knowledge of, personnel performing the subcontractor oversight function, and effective implementation of the subcontractor oversight expectations, are less than adequate. There are two Findings and six Observations for this objective.

Discussion:

Programmatic ownership and responsibility for success of the subcontract oversight function have not been established. Guiding Principle 1 of RPP-MP-003, *Integrated Environment, Safety, and Health Management System Description for the Tank Farm Operations Contractor*, establishes expectations for processes to provide clear roles and responsibilities. TFC-BSM-CP_CPR-C-05, *Procurement of Services* and TFC-ESHQ-S_SAF-C-07, *Subcontractor Oversight*, provide applicable roles and responsibilities for the tasks applicable to the procurement process and subcontractor management and oversight; however, the functional area managers for these procedures acknowledge only their specific functional roles and responsibilities in the overall process. This issue is identified as **Finding SO-F1**. In particular:

a. ISMS Guiding Principle 1 mandates that clear and unambiguous lines of authority and responsibility are established and maintained at all organizational levels. Though the relevant ESH&Q functional area managers confirmed ownership responsibility for their respective functional areas, an individual to serve as the collective management sponsor is not evident.
b. Though the Manager – Industrial Safety is the Functional Area Manager for the subcontract oversight procedure (TFC-ESHQ-S_SAF-C-07, *Subcontractor Oversight*) and the Manager – Procurement Services is responsible for the Buyer Technical Representative function to coordinate the development and implementation of subcontractor oversight plans, neither individual feels that they own or are responsible for success of the subcontractor oversight function.
c. 'Functional area manager' and 'document owner' responsibilities for the above procedure transitioned from the Quality Assurance organization to the Industrial Safety organization with revision B-4 in February 2008. An expectation that process ownership accompany the transfer of procedure ownership was not considered in the transition.
d. Though functional area manager responsibility for the above procedure has recently transitioned, the Manager – Quality Assurance Services remains responsible for the Subcontract Oversight form (Form A-6003-991).
e. PER 09-0166, issued January 27, 2009, discussed knowledge deficiencies encountered with several BTRs regarding the expectations for and implementation of subcontract oversight plans. This PER was categorized as PER/RES, and assigned to the Manager – Procurement Services.

Assessment activities have not been performed over the past several years to ensure that implementation of the subcontractor management and oversight process is achieving its desired objective. Core Function 5 (Provide Feedback and Continuous Improvement) of Integrated Safety Management as described in RPP-MP-003, *Integrated Environment, Safety, and Health Management System Description for the Tank Farm Operations Contractor*, establishes expectations for feedback and continuous process improvement. This issue is identified as **Finding SO-F2**. Contributing factors are as follows:

a. Comprehensive assessments of the subcontractor management and oversight process have not been performed in approximately nine years. Assessment activities have focused on identification and resolution of subcontract management and oversight issues in specific organizational areas, without performance of process assessments to identify and resolve the underlying issues.

    1. A series of subcontract management effectiveness assessments were performed in FY2002, but only one has been performed since (ref. FY-2007-SHQ-M-0135, *Subcontractor Oversight Process*, dated March 26, 2007, performed by the Quality Assurance organization). The one assessment report indicated an assessment of shallow scope and depth of the subcontractor oversight process.
    2. An independent Assessment of '*CH2M HILL Corporate Independent Assessment of CHG Hanford Tank Farm Activities* performed in December 2005 identified "There is no articulated strategy to describe how we approach subcontractor activity in the independent assessment program. ... This issue is relevant because of the heightened expectations from the DOE with respect to our responsibility for ensuring adequate performance of our subcontractors." This issue was supported by a recommendation that "The ESRB should determine if the company strategy to ensure adequate subcontractor oversight is adequately articulated and sufficiently comprehensive" (reference PER 06-0084). The closure documentation for this PER did not provide evidence that the recommendation was considered for action by the ESRB.
    3. An Independent Assessment of 'Procurement to Include Subcontractor Oversight' was planned for FY 2006, but was subsequently cancelled. This assessment was initially planned, in part, in response to PER 06-0084 (January 2006) recommending "The ESRB should determine if the company strategy to ensure adequate subcontractor oversight is adequately articulated and sufficiently comprehensive." Insufficient follow-through of this issue indicates a missed opportunity to preclude the current adverse trend.
    4. There are no further assessments planned in the subcontract management and oversight effectiveness topical area in FY2009.
    5. At the time of the assessment, there are no personnel in the Quality Assurance, Safety or Procurement line management teams qualified to lead Management or Specialty Assessment activities, via completion of Course # 350319, *Management Assessment Team Leader Qualification* or

Course # 357319, *Assessment Team Leader Requalification*. Though the Manager – Quality Services was previously qualified to lead assessment teams, the qualification expired on February 12, 2009. It is recognized that another member (non-management) of the Quality Services organization is presently qualified to lead assessment teams.

6. RPP-8411, *Washington River Protection Solutions Procurement Process Description* (co-approved by ORP) states "... ensure that every product or service purchased meets all necessary technical standards and requirements"; however, monitoring and evaluation of the procurement process are not implemented via implementation of self-assessment processes as discussed in the document to promote continuous improvement (reference sections 2.3, *Oversight and Compliance: Self-Assessment*, and 4.7, *Continuous Process Improvement*). In particular, expectations of section 5.6.1, *Managing Subcontractor Performance* to facilitate exemplary subcontract performance through monitoring of subcontractors to ensure ESH&Q program compliance are infrequently performed.
7. MOPs are not performed of the Subcontractor Oversight function as described in TFC-ESHQ-S_SAF-P-06, *Safety Assessments*. Attachment A (Safety and Health Program Functional Elements and Minimum Assessment Periodicity) identifies Subcontractor Oversight as a topic to be considered in development of the annual safety program assessments and MOP topics; however, review of MOP records in IDMS indicates there have been only two MOPs performed in this area over the past four years. The annual (fiscal year) schedule for Safety and Health program MOPS on topics in Attachment A, such as Subcontractor Oversight, has not been developed for FY2009 as described in Step 4.1 of the procedure. The issue of not scheduling safety MOPs to cover Subcontractor Oversight and other S&H areas is similar to the issue described in PER 08-0252.

b. Several Problem Evaluation Requests (approximately ten PERs) have identified ineffective implementation of subcontractor oversight plans, as identified during Management and Specialty Assessments. However, the corrective action plans associated with the relevant PERs have focused on the functional area responsible for the specific subcontract management and oversight plans, without communication to the process owners (e.g., presently, the Industrial Safety organization). Consequently, emergence of an adverse performance trend has not been identified of the subcontractor oversight process to enable focus on process implementation deficiencies.

c. Discussion with a Safety SME indicated they spend much more time reviewing documents in the office, (submittals, work packages, etc.) than performing field surveillances. The SME stated that not all time spent in the field is necessarily documented as a surveillance. Also, discussions with two SME's indicate they expect the BTR to bring a subcontractor oversight plan screening form to them to be signed or request it be developed, but they don't expect to have to initiate the

oversight screening form themselves. One interviewed SME, specifically asked if he was familiar with the new release of the Subcontractor Oversight procedure dated February 11, 2009 and his responsibility to develop the plan as indicated below, stated that he was not aware.

> 3.2 "Safety & Health, Environmental, Quality Assurance, and Radiological Controls personnel are jointly responsible for coordinating subcontractor oversight activities with the buyer's technical representative (BTR) as specified below. When required, they will develop a Subcontractor Oversight plan and provide it to the BTR and Procurement for transmittal to the Subcontractor."

Presently, for several (approximately 30) subcontracts/releases that apply to in-farm and design/build procurements, the assigned BTR is an administrative individual that does not possess technical knowledge and experience necessary to ensure that elements of the subcontract management and oversight process are implemented effectively. As an area for improvement, development and implementation of a qualification card process, especially of a dual qualification level to differentiate between administrative and technical procurements involving field work, would assist in ensuring that personnel assigned to perform the BTR function possess the requisite training and experience to perform the function effectively. This issue is identified as **Observation SO-O1**.

Personnel that perform the BTR function, when interviewed, stated that implementation of the BTR responsibilities frequently impose upon their normal position duties, and BTR responsibilities are not receiving an appropriate level of commitment. Consequently, decisions are made that result in less than adequate attention to BTR responsibilities. Presently, 36 personnel who are embedded in the line organizations perform the BTR function as a collateral duty. Administrative personnel performing the associated BTR functions appear motivated and interested in success of the subcontract management and oversight process, but sometimes do not recognize or provide challenge when process elements are not implemented in an effective manner (such as responsible functional area managers incorrectly concluding that oversight of field work was not needed). Interview results also indicated that the process knowledge and time commitment necessary to effectively perform BTR responsibilities are not receiving an appropriate level of commitment by most BTRs. As an area for improvement, development, staffing and implementation of a limited size core group of personnel to perform all BTR functions has potential to increase both efficiency and effectiveness of the BTR role. This issue is identified as **Observation SO-O2**.

The method and depth of training provided to BTRs is less than adequate to ensure that BTRs are fully trained to assume the functional roles and responsibilities. BTRs frequently cited a desire for additional training. Document reviews and interviews conducted determined training and awareness of Buyer Technical Representatives regarding their functional roles and responsibilities for subcontractor oversight are less than adequate. This issue is identified as **Observation SO-O3**. For example:

a. Several BTRs stated that they were not aware of the BTR role in subcontractor oversight. Previous assessments found additional examples of BTRs stating that they had no knowledge of TFC-ESHQ-S_SAF-C-07, *Subcontractor Oversight* or the use of Form A-6003-991 (Subcontractor Oversight Plan) to determine the need for oversight of subcontractors.
b. Contributing to this knowledge weakness is discontinuation of a continuing training activity for BTRs that was removed in February 2008. Consequently, personnel performing BTR responsibilities are not provided with continuing training opportunities to maintain proficiency as BTRs.
c. Recent revisions to TFC-BSM-CP_CPR-C-05 that impacted BTR roles specified "Training will be provided to BTRs in their quarterly update"; however, as noted above, quarterly updates have not been provided since 2008.
d. When interviewed, presently active BTRs stated that they would welcome the concept of continuing training. Course #350246, *Buyer Technical Representative Upgrade Class* is the training provided to authorized BTRs; 130 current WRPS personnel have completed Course #350246, *Buyer Technical Representative Upgrade Class* since calendar year 2001, of which 72 are authorized to perform BTR responsibilities, of which 36 are actively performing BTR responsibilities.
e. The procedure for subcontractor oversight provides no delineation between the types of subcontracts (e.g., administrative procurement activities, rather than procurement activities involving field work, though staff augmentation procurements are excluded) and provides no guidance for determining or developing the level or type of subcontractor oversight that might be appropriate for a given type of subcontract, i.e. design, construction, etc. Consequently, BTR knowledge and awareness of subcontractor oversight expectations is entirely dependent upon the BTR's technical knowledge and experience.
f. Increased familiarization with Passport was cited by most BTRs as a desired training activity. In addition, several authorized (but inactive) BTRs are not authorized to access Passport; subsequently, their ability to effectively perform the BTR function is significantly minimized should this support be needed.

Personnel performing Buyer Technical Representative (BTR) responsibilities achieve authorization to perform the function, and are listed on the Procurement web site; however, there is no requirement to receive re-authorization if personnel have not recently performed BTR responsibilities. Consequently, personnel performing BTR responsibilities do not maintain proficiency as BTRs, and are not made aware of changes to BTR processes and expectations or to changes in the procurement process. As an area for improvement, re-authorization of personnel performing BTR responsibilities should be considered (e.g., BTR function authorization removed) if they have not actively performed BTR responsibilities within a specified period of time. This issue is identified as **Observation SO-O4**.

The *Training Implementation Matrix per DOE Order 5480.20A* dated September 2005 needs to be revised to reflect the correct 'Compliance Reference' for 'Subcontractor Personnel Qualification'. Specifically, Table 2 (General Requirements Matrix), Chapter 1 (General Requirements), Section 3 (Subcontractor Personnel Qualification) references the compliance reference document as TFC-BSM-CP_CPR-C-03, *Buyer's Technical Representative Process*; however, this procedure was cancelled in April 2007, with the key elements incorporated into TFC-BSM-CP_CPR-C-05, *Procurement of Services*. Discussion with the Training Manager identified that the need for a revision to the Training Implementation Matrix has been identified and is in progress, including removal of the above reference. This issue is identified as **Observation SO-O5**.

A comprehensive assessment of the integration, procedural direction, and implementation of the WRPS procurement processes has not been performed since calendar year 2002. As an improvement opportunity, performance of an assessment in this area should be considered, to include interface management with the prime contractors and affiliates within the assessment scope. This issue is identified as **Observation SO-O6**.

4.3 Functional Area: Subcontractor Management and Oversight / Objective #2

Objective:

Subcontractor management and oversight activities are supported by effective flow-down of requirements to the subcontractors.

Criteria/Requirements:

1. General site and project-specific safety, health, radiological, environmental, and quality requirements are included in contracts and statements of work, including the following as flowed down through the procurement process to subcontractors:

    a. The Tank Operations Contractor (TOC) Health and Safety Plan (HASP) and the Price Anderson Amendment Act reporting responsibility is applicable to subcontractors who may be involved in tank farm work activities such as design, construction, operation, maintenance, decontamination, decommissioning, and environmental restoration activities.
    b. The medical contractor is responsible for scheduling employees and the employees of contractors, and lower-tier subcontractors for medical qualification examinations and medical monitoring based on the data provided through the EJTA. Results of medical examinations and monitoring are reported to employees, employees of contractors and lower-tier subcontractors, and their respective managers or supervisors. The medical contractor is responsible for maintaining medical records in accordance with the applicable OSHA and DOE requirements.

c. The Chemical Management Plan is relevant to subcontractors involved in the management of hazardous materials.
d. Processes are used to communicate hazardous material information to all personnel who work with hazardous materials during any activity in the tank farms.
e. Construction subcontractors are required to implement the TOC worker safety and health plan (WSHP). The scope, technical complexity, and risk of the construction activity determines the applicable state and federal requirements, as well as the TOC safety procedures, work planning process, and field oversight required.
f. As detailed in HNF-MP-5184 (*Washington River Protection Solutions Radiation Protection Program*) requirements contained in 10 CFR Part 835 are invoked to establish radiation protection standards, limits, and program requirements for protecting individuals from ionizing radiation.
g. The *Washington River Protection Solutions (WRPS) On-Site Work Provisions* elements are invoked, to include the following:

    i. Required Notifications
    ii. Investigation Support
    iii. Reporting and Record Keeping
    iv. Site-wide Qualification and Training
    v. Site Deliveries
    vi. Security
    vii. Medical Evaluations
    viii. Radiation Protection
    ix. Emergency Management
    x. Workplace Substance Abuse Programs
    xi. Whistleblower Protection

2. Subcontractor oversight activities consider reporting of non-compliances to 10CFR851 and PAAA.

RESULTS

Conclusion Statement:

The objective and organizational structure that supports effective flow-down of requirements to the subcontractors was found to be adequate and effective. There are no Findings or Observations for this objective.

Discussion:

TFC-BSM-CP_CPR-C-05, *Procurement of Services*, and TFC-BSM-CP_CPR-C-06, *Procurement of Items (Materials)* ensure that the WRPS contract requirements receive

appropriate flow-down to subcontractors. The responsibility to implement requirements flow down lies with the Buyers Technical Representative (BTR) as described in TFC-BSM_CPR-C-05 which identifies the BTR as responsible to ensure deliverables and requirements are clearly defined. BTRs ensure company policies, procedures, and ISMS flow-down, and Safety, Procurement and Quality Assurance requirements are communicated to subcontractors and incorporated into their work efforts. BTRs are the authorized communication link between WRPS technical staff and the subcontractor to clarify questions, procedures, establish priorities, authorize overtime/accelerate progress and processes. BTRs work in concert with procurement specialists to develop new subcontracts and modify existing subcontracts to reflect changing scope and/or field conditions. Specific applications of this responsibility are contained in Section 4.0.

Document reviews and interviews determined that the flow-down of WRPS applicable contract requirements are usually listed in both blanket master agreements and statements of work for subcontractor activities Several minor examples of ineffective requirements flow-down were noted that were judged to have no significant impact. Several assessors evaluated the BMAs and SOWs developed by different contract requestors and BTRs and found no issues. Examples: Review of construction requisition 182095 and SOW; Requisition 00176418, *C-104 Engineering Design Support* and Contract Requisition 00180390; and *241-C-110 Waste Retrieval Systems Installation*. The TOC HASP and PAAA responsibilities are flowed down to the subcontractor as are requirements for a Chemical Management Plan, On-Site Work Provisions, and applicability to 10 CFR 851.

4.4 Functional Area: Subcontractor Management and Oversight / Objective #3

Objective:

Subcontractor management and oversight activities are supported by periodic interface with responsible subcontractor personnel, including observations of in-progress field work, corrective action management, records management, and notification and reporting.

Criteria/Requirements:

1. Subcontractor Oversight Plans are in place for all activities identified on the Subcontractor Oversight Plan screening forms, with the screening form results located in the Buyer Technical Representative (BTR) files.
2. Subcontractor oversight activities are captured on the integrated assessment schedule or project schedule, as appropriate (e.g., progress meeting participation, Management Observation Program (MOP) conduct, periodic monitoring of performance).
3. Oversight files are maintained for each subcontractor to document oversight activities and responses to any findings and issues.
4. Subcontractor Oversight Plans are maintained as quality records.

5. Subcontractor performance evaluation history files are reviewed by BTRs, as necessary, to ensure that opportunities to bid for work are provided to quality performers.
6. Findings and issues resulting from subcontractor oversight activities receive appropriate corrective actions that prevent recurrence.
7. The WRPS assessment process is applied to evaluate oversight of subcontractor performance, including hands-on work and field implementation of administrative and technical procedures and involve workers, supervisors, and managers.
8. Subcontractor oversight activities consider subcontractor knowledge of 10CFR851 requirements (such as worker rights, posting of worker rights, etc,).
9. Subcontractor oversight activities consider the effectiveness of reporting of non-compliances to 10CFR851 and PAAA.

Results

Conclusion Statement:

The objective and organizational structure that supports implementation of periodic interface with responsible subcontractor personnel, including observations of in-progress field work, corrective action management, records management, and notification and reporting was found to be less than adequate. There are three Findings and six Observations for this objective.

Discussion:

As detailed in this section, several issues were identified relating to implementation of subcontract oversight expectations. Contributing to these issues is inconsistent interpretations as to what constitutes a satisfactory subcontractor oversight plan. For example, interview results revealed the following interpretations:

a.) Completion of section II of the Subcontractor Oversight Plan form (Form A-6003-991, *Subcontractor Oversight Plan*) that identifies necessary oversight activities.
b.) Development of specific subcontractor oversight criteria that are to be implemented to support item a., and
c.) Generation of a detailed subcontractor oversight plan that is scheduled and implemented on a pre-determined frequency.

Subcontractor Oversight Plan (screening) forms (Form A-6003-991) have not been developed, or have been completed incorrectly, for many subcontracts as required in TFC-ESHQ-S_SAF-C-07, *Subcontractor Oversight*. Consequently, BTR coordination actions to ensure that subcontractor oversight coordination activities are defined and implemented are frequently not provided. This issue is identified as **Finding SO-F3**. It is recognized that considerable field oversight is performed, particularly in the industrial

safety area; however, there is no assurance that these oversight activities effectively support subcontract management and oversight. The following examples support the finding:

a. Many subcontracts/releases (15 of 34 based upon a sample by the assessment team) have not been screened to determine whether subcontractor oversight plans are necessary.
b. Subcontract oversight screening activities indicate a need for oversight of field activities for only 36 of 55 subcontracts involving field work (65%, as of February 2009), based upon a sample review by the Safety organization. Consequently, subcontract oversight plans and schedules have frequently not been implemented for subcontracts involving field work activities.
c. Feedback received during the assessment indicated that some personnel responsible for BTR activities incorrectly believed that subcontract activities implemented via the WRPS work control system did not require development of Subcontractor Oversight Plans.
d. In one instance, the 'subcontract oversight' function understanding by the responsible BTR was to review contractor invoices for budget and scope impact, rather than ESH&Q oversight of subcontractor activities.
e. Article 2.0 (Integration of Environment, Safety, Health and Quality (ESH&Q) Into Work Planning and Execution), Item 2.1.11 (General) of the WRPS On-Site Work Provisions states "Open and effective communication shall exist between the SUBCONTRACTOR and the Buyer's Technical Representative (BTR) to support the management of ESH&Q issues and initiatives." Though several BTRs were aware of this clause, they did not interpret the clause to encompass subcontract management and oversight.

Subcontractor oversight activities are not performed by the Environmental Programs organization as required by RPP-MP-003, *Integrated Environment, Safety, and Health Management System Description for the Tank Operations Contractor*, and TFC-ESHQ-S_SAF-C-07, *Subcontractor Oversight*. Consequently, Environmental Compliance personnel do not implement necessary environmental field activities. Current Environmental Surveillance checklists do not identify subcontractor oversight as within scope of Tank Farm facilities. This issue is identified as **Finding SO-F4**.

TFC-BSM-CP_CPR-C-05, *Procurement of Services*, establishes the process for which subcontractor oversight is identified through the development of procurement documents such as the Blanket Master Agreement (BMA) and Statement of Work (SOW). Several Contract Requisitions were noted to not identify subject matter experts (SMEs) in functional areas impacted by the work scope (e.g., Radiological Control, Environmental Programs, and Quality Assurance). TFC-BSM-CP_CPR-C-05, *Procurement of Services*, Section 4.3 Creating and Approving the Statement of Work requires involvement of SME and others, along with Attachment C of the procedure which functions as the tool the BTR can use. Improper approval routing misses the opportunity to ensure proper requirements are flowed down to the subcontractor via the Statement of Work. TFC-BSM-CP_CPR-C-05 provides a useful tool to identify necessary review and approval

SMEs on a 'Determination of Required Approvals' checklist; however, the Buyer Technical Representative and Contract Requestor incorrectly completed the checklist in several instances, resulting in a conclusion that SME approval of relevant Statements of Work was not necessary. This issue is identified as **Finding SO-F5**. Of ten Requisitions reviewed, five with potential ESH&Q impact (e.g., radioactive waste disposal activities, tank farm entries to support inspections) did not contain appropriate approvals. One example of not involving a relevant SME in the Statement of Work approval process (Radiological Control, reference Requisition 00182095) was identified recently in PER 09-0338 (task releases had not yet been issued on this Requisition). The four additional Requisitions are as follows:

Contract Number/ Requisition Number	Contract Scope	Relevant Functional Area SMEs Not Included in SOW Approval
36572 / 00175072	Tank Farm Inspection Services	Radiological Control
28005 / 00178835	ATL Hazardous Waste Treatment/ Disposal	Quality Assurance
28005 / 00178837	Tank Farm Hazardous Waste Treatment/ Disposal	Quality Assurance
36437 / 00176764	PNNL Support for ILAW Glass Testing	Radiological Control Environmental

There is little objective evidence of Environmental, Safety, or Radiological Control oversight being performed either as specific subcontractor oversight or as management observation program (MOP) walk downs or safety surveillances. Interviews with subcontractor staff at the ATCO shop and Vadose Zone project work indicated little presence by environmental, safety or radiological control staff performing oversight activities. A field walk-down of the ATCO shop by the assessment team on February 26, 2009 identified several instances of poor housekeeping. A contributing factor was that requirements for daily safety inspections had not been flowed down to construction subcontracts, though the Construction subcontractor safety professionals do perform safety inspections. When the ATCO shop storage conditions were observed by the assessment team, prompt action was taken by a WRPS safety professional in attendance and action was taken to capture this issue in the corrective action program (reference PER 09-0355). As described in the PER, contributing to the issue was that requirements for daily safety inspections had not been flowed down to construction subcontracts, though the Construction subcontractor safety professionals do perform safety inspections.

Subcontractor oversight expectations are developed and implemented through coordination with the BTR, contract requestor, and SME, and support by ESHQ SMEs to conduct the required oversight. Interviews and document reviews identified several subcontractor oversight plans indicating that planned oversight would consist of routine functional area surveillance activities already in place, with no specificity as to the relevant contract/release. Consequently, there is no assurance that the planned oversight activities would consider elements of the contract/release that may require oversight scope of a specialized nature, nor is there assurance that the specific subcontracts received the planned oversight. This issue is identified as **Observation SO-O7**. Though a considerable amount of field oversight activity is evident, particularly in the industrial safety area, it is virtually impossible to correlate the actual field work activities to specific subcontractor field activities.

Observation indicated the ATCO shop is presently in use by construction subcontractors, but there is no evidence of a "Formal Turnover" of the facility from WRPS to the subcontractor in accordance with the provisions of the Statement of Work (SOW) (reference Contract Requisition 00180390, *241-C-110 Waste Retrieval Systems Installation*). This issue is identified as **Observation SO-O8**. A review of the SOW finds the SOW vague regarding expectations the facilities being turned over to the subcontractors for work. If item 1.1 of the following text of the SOW is in need of revision, the revision should be processed:

Company Facilities

1.1 When the Company provides onsite facilities (i.e., office/administrative, storage, shop facilities and/or lavatory/sanitary facilities) and furnishings (i.e., refrigerators, stoves, microwaves, furniture), the Company will formally turnover the facility(ies) and furnishings to the Contractor.

The WRPS ESH&Q organization is responsible to provide subcontractor management support to the BTR by 1) communicating requirements, and 2) performing assessments, inspections, and/or surveillances to ensure compliance as discussed in TFC-ESHQ-S_SAF-C 07, *Subcontractor Oversight*. Success of the subcontractor oversight process is based upon the BTR, contractor requestor, and SME working together to ensure that subcontractor oversight is performed as needed and is performed effectively. Actions to screen subcontracts to determine the need for subcontractor oversight and to develop subcontractor oversight plans are performed as post-subcontract award activities via completion of the Subcontractor Oversight Screening form (Form A-6003-991). As an area for improvement, completion of the need for subcontractor oversight (via the subcontract oversight screening form completion) should be considered as a pre-award activity. Should the need for a revision to subcontract oversight be identified, particularly the scope and frequency of subcontractor oversight, a revision to the screening determination could be readily accommodated. If the decision is to retain the post-award determination, a time period following award needs to be specific to direct when the oversight screening activity should be completed. This issue is identified as **Observation SO-O9**.

Evaluation of Subcontractor Performance evaluations are not performed for some subcontracts that roll over year-to-year. Three interviewed BTRs with relevant contracts/releases confirmed that they do not complete the *Evaluation of Subcontractor Performance* evaluations at the end of the fiscal year. Since the contracts potentially never end, there is no trigger to perform this closure activity described in step 4.4 (Closure Oversight Activities) of TFC-ESHQ-S_SAF-C-07, *Subcontractor Oversight.* Consequently, evaluation documentation does not exist to support future subcontract choice considerations. Three interviewed BTRs with relevant contracts/releases confirmed that they do not complete the *Evaluation of Subcontractor Performance* evaluations at the end of the fiscal year. As an improvement opportunity, these evaluations should be completed at the Release level, rather than at the Subcontract level, since Releases are issued at least each year. This issue is identified as **Observation SO-O10**.

Several areas of improvement were identified for the Subcontractor Oversight Form (Form A-6003-991) to strengthen the determination process for subcontractor oversight (this issue is identified as **Observation SO-O11**):

a. To maintain process integrity, a suggested improvement opportunity is to implement one or both of the following recommendations:

    i. Require each of these functional area managers to concur with the screening results by signing in Section I (Oversight Plan Screening) of the form.
    ii. Provide concurrence ability in Passport for each of these managers regarding the need for subcontractor oversight plans in their respective functional area.

b. Section I of the Subcontractor Oversight Plan form should be modified to add a 'Yes/No' determination to the question "Does the work activity involve field work?", which should require increased ESH&Q scrutiny.

c. Sections I and II of the Subcontractor Oversight Plan form should be modified to require Form A-6003-991 to be attached to the Passport Comm Log when completed.

d. Section II of the Subcontractor Oversight Plan form requiring approval signatures by the relevant ESH&Q managers should be changed to require both the Manager – Industrial Safety and the Manager – Industrial Hygiene to approve, since subcontractor oversight plans may be required in one of these areas but not the other.

TFC-ESHQ-S_SAF-C-07, *Subcontractor Oversight* does not provide recommended subcontractor oversight frequency or depth of review. Some checklist considerations for scope are provided in Attachments A through D of the procedure for Safety and Health,

Radiological Control, Environmental and Quality Assurance, respectively; however, considerations such as prior site work by the subcontractor, the detailed nature of the work (especially for field activities), and potential vulnerability should the work not be performed safely and as planned should be considered when determining the oversight frequency and depth. This issue is identified as **Observation SO-O12**.

4.5 Functional Area: Document Control

Objective:

WRPS activities ensure that specified documents, either in hard copy or electronic media, including latest changes thereto, are controlled, reviewed for adequacy, approved for release, and distributed to and used at the location where the work is being performed.

Criteria/Requirements:

1. The following controls shall be applied to documents and changes thereto:

    - The identification of controlled documents
    - The specified distribution of controlled documents for use at the appropriate location
    - The identification of individuals responsible for the preparation, review, approval, and distribution of controlled documents
    - The review of controlled documents for completeness and approval prior to distribution, and a method to ensure the correct documents are being used.

2. Changes to documents, except minor changes, shall be reviewed and approved by the same organizations or technical disciplines that performed the original review and approval, unless other organizations (those affected by the change) are specifically designated.
3. The individuals reviewing document changes shall have access to pertinent document background data or information upon which to base their review and approval.
4. Minor changes to documents, such as inconsequential editorial corrections, shall not require that the revised documents receive the same review and approval as the original documents. The following are considered editorial changes:

    - Correcting grammar or spelling
    - Renumbering sections or attachments that do not affect the sequence of work
    - Changing the title or number of the document and updating organizational titles.

5. To avoid a possible omission of a required review, the type of minor changes that do not require such a review and approval, and the person who can authorize such a decision, shall be clearly delineated.

RESULTS

Conclusions/Summary:

The objective and organizational structure that supports document control either in hard copy or electronic media, including latest changes thereto, are controlled, reviewed for adequacy, approved for release, and distributed to and used at the location where the work is being performed was found to be adequate. Several improvement opportunities were identified to increase process efficiency and effectiveness. There are no Findings and three Observations for this objective.

Discussion:

TFC-PLN-02, *Quality Assurance Program Description*, Section 6.0 – Document Control was part of the CRAD for the assessment. Document changes of company procedures are under TFC-MD-061, *Transition of CH2M HILL Procedures and Administrative Documents to Washington River Protection Solutions* authorizing change for those procedures and administrative documents that require administrative changes to reflect the new contractual relationship between the TOC and the U.S. Department of Energy ORP.

Procedures that support the subcontractor oversight function provide several instances of conflicting direction. This issue is identified as **Observation SO-13**. In particular, TFC-ESHQ-S_SAF-C-07, *Subcontractor Oversight*, TFC-BSM-CP_CPR-C-05, *Procurement of Services* and TFC-BSM_CP_CPR-P-05, *Subcontract Closeout* are not well integrated to ensure that Buyer Technical Representatives, Contract Requestors and ESH&Q managers can perform their roles and responsibilities effectively and efficiently. For example:

a. Step 4.5 (Closure Oversight Activities) of TFC-ESHQ-S_SAF-C-07, *Subcontractor Oversight*, requires the Buyer Technical Representative and the Safety and Health, Environmental, Radiological Controls and Quality Assurance representatives to "Participate in/provide input to the subcontractor Evaluation of Subcontractor Performance." However, step 4.7 (Subcontract Closeout) of TFC-ESHQ-S_SAF-C-07 states to "Obtain input from the project team and complete the Evaluation of Subcontractor Performance for subcontracts/releases greater than $100K." In effect, conflicting direction exists for subcontracts/releases that are less than or equal to $100K. Also, the wording in TFC-BSM-CP_CPR-C-05, *Procurement of Services*, provides ambiguous direction for releases of a subcontract that individually would equal less than $100K but would result in a subcontract totaling greater than $100K.

b. Step 4.6 (Subcontractor Oversight Plan Changes) of TFC-ESHQ-S_SAF-C-07 requires the Buyer Technical Representative to "Maintain the subcontractor oversight plan in the BTR's file for the subcontractor.", with the Records Custodian identified as the "Contract Originator and/or assigned Buyer Technical Representative". However, TFC-BSM-CP_CPR-C-05 does not provide BTR file disposition direction; it states in Section 6.0 (Records) that the Records Custodian for "routine procurement files" is "Procurement".
c. Section 6.0 (Records) of TFC-ESHQ-S_SAF-C-07 identifies Subcontractor Oversight Plans as quality records. However, Section 6.0 (Records) of TFC-BSM-CP_CPR-C-05 identifies "routine procurement files" as non-quality records. If Subcontractor Oversight Plans are considered to be "routine procurement files", this direction is in conflict. If Subcontractor Oversight Plans are not considered to be "routine procurement files", there are no record requirements identified.
d. Step 4.7.3 (Subcontract Closeout) of TFC-BSM-CP_CPR-C-05 requires completion of the Evaluation of Subcontractor Performance form with accompanying "Evaluation Instructions". The Evaluation Instructions do not correlate to the Evaluation of Subcontractor Performance form contents. Also, configuration control should be implemented by processing the Evaluation of Subcontractor Performance form as a site form.
e. Step 4.5.1 of TFC-ESHQ-S_SAF-C-07 requires the BTR and ESH&Q personnel to "Participate in/provide input to the subcontractor Evaluation of Subcontractor Performance"; the procedure does not direct that the Evaluation of Subcontractor Performance be provided to the Procurement Specialist. Step 4.1.3 of TFC-BSM_CP_CPR-P-05, *Subcontract Closeout*, requires the Procurement Specialist to "Include copy of Evaluation of Subcontractor Performance in procurement file <u>if received</u> from BTR or Procurement Support". By default, the Evaluation of Subcontractor Performance would not be filed if not received.

TFC-BSM-CP_CPR-C-05, *Procurement of Services* is unclear as to whether documents identified in the procedure are to be treated as record material. This issue is identified as **Observation SO-14**. For instance:

a. Determination of Required Approval (DRA) forms provide no signature line (as expected for a record document); also, the form is not listed in section 6.0 (Records), but it is to be attached to the 'Passport Comm Log'.
b. The Workplace Substance Abuse Program (WSAP) form provides a signature line for the BTR, but then indicates "Original in BTR File" in that signature area. The procedure also instructs the BTR to attach the WSAP to Passport. Section 6.0 (Records) states that the Procurement Services organization is the records custodian for procurement files. It is not evident why a separate "BTR File" is needed, and why one copy goes into the Passport Comm Log and one into the BTR file.

c. Section 6.0 (Records) does not clearly indicate what items are records and where they are maintained as records. Is Procurement using Passport for records storage? Can a BTR use Passport for their "BTR file"?

During preparation activities for this assessment, a recent revision to TFC-ESHQ-S_SAF-C-07, *Subcontractor Oversight* Rev B-6, issued February 11, 2009 was found to have been processed incorrectly. The issue was captured in PER 09-0246 with the text as follows:

> Type of Procedure Change - Changes were made to this procedure regarding responsibilities for subcontractor oversight; however, the ADCA indicates this is a "minor revision". Changes made are beyond the scope of a "minor revision" as defined in the QAPD. TFC-PLN-02, *Quality Assurance Program Description*, defines a "minor change" as follows:
>
> > Minor changes to documents, such as inconsequential editorial corrections, do not require that the revised documents receive the same review and approval as the original documents. The following are considered editorial changes:
> >
> > 1) Correcting grammar or spelling
> > 2) Renumbering sections or attachments that do not affect the sequence of work
> > 3) Changing the title or number of the document
> > 4) Updating organizational titles.
> >
> > Training - The ADCA was completed to indicate "Classroom Training without Verification" would be given. However, this procedure was issued and effective February 11, 2009 without training provided to BTRs.
> >
> > Impacted Procedures - This procedure interfaces with TFC-BSM-CP_CPR-C-05, *Procurement Of Services*, and Form A-6003-991 (*Subcontractor Oversight Plan*). The ADCA did not indicate there were any impacted procedures, yet the changes would seem to require similar changes to the Procurement of Services procedure and possibly Form A-6003-991.

TFC-ESHQ-S_IH-C-02, *Hazard Communication*, provides an expectation to provide updated Right-to-know (RTK) information within 30-days of receipt of a new hazardous material. During this assessment, the RTK station supporting the recently re-occupied ATCO building was identified as having outdated RTK information. Follow up provided verbal input that "new inventory sheets are being worked on"; however, good business practice would provide for issuance of updated RTK information prior to building re-occupancy. A previous weakness with RTK information not being in place at several work areas/facilities was identified in PER 08-1312 (categorized as a PER/RES, identified during the 10CFR851 Worker Safety and Health Independent Assessment in

June 2008). Corrective action did not provide an extent-of-condition evaluation of other facilities, such as the ATCO shop, but instead focused on evaluation of migration to a paperless system.

TFC-ESHQ-ENV_AP-D-01, *Environmental Oversight of Subcontractors*, was cancelled in June 2006; however, the document is still listed as a company level guidance document in TFC-PLN-73, *Environmental Protection and Compliance Plan*, and should be replaced with TFC-ESHQ-S_SAF-C-07, *Subcontractor Oversight*. This issue is identified as **Observation SO-O15**.

4.6 Functional Area: Records Management

Objective:

WRPS activities ensure that the requirements for the generation, classification, storage, and maintenance of documents designated as quality assurance (QA) records are implemented.

Criteria/Requirements:

1. Records shall be identified, generated, authenticated, maintained, and their final disposition specified. Requirements and responsibilities for these activities shall be documented.
2. Requirements and responsibilities for record transmittal, distribution, retention, maintenance, and disposition shall be established and documented.
3. Records shall be distributed, handled, and controlled in accordance with written procedures.
4. Records shall be traceable to associated items and activities and accurately reflect the work accomplished or information required.
5. Individuals handling records shall protect them from damage, determination, or loss until the records are submitted to the records management system.
6. Records shall be stored in facilities, containers, or a combination thereof, constructed and maintained in a manner which minimizes the risk of damage or destruction.

RESULTS

Conclusions/Summary:

The objective that supports records management for the generation, classification, storage, and maintenance of documents designated as quality assurance (QA) records was found to generally be adequate. There is one Finding and one Observation for this objective.

Discussion:

Record retention requirements for Subcontractor Oversight Plan (screening) forms (Form A-6003-991) and scheduling requirements for subcontractor oversight activities are not implemented as described in TFC-ESHQ-S_SAF-C-07, *Subcontractor Oversight*. This issue is identified as **Finding SO-F6**. Specifically:

a. Section 6 (Records) of TFC-ESHQ-S_SAF-C-07 identifies that Subcontractor Oversight Plan (screening) forms (Form A-6003-991) are to be maintained as quality records. Interviewed Buyer Technical Representatives, responsible to implement the record retention were not aware of the quality record expectation. Contributing to this issue is an absence of direction within the procedure to implement the record retention requirement.

b. Step 4.2.3 (Post-Award Oversight Activities) of TFC-ESHQ-S_SAF-C-07 requires subcontractor oversight activities to be placed on the (WRPS) integrated assessment schedule or project schedules. Though subcontractor oversight activities are sometimes scheduled on department-level schedules, use of the integrated assessment schedule or project schedules is not implemented. As a suggested corrective action, the scheduling procedure requirement should provide increased flexibility as to the schedule means, allowing use of department schedules or tracked as E-STARS Tasks.

Passport is not recognized as a document 'record' database. TFC-BSM-IRM_DC-C-02, *Records Management*, recognizes documents maintained as records in approved TFC Records Storage Areas (RSAs), the Document Service Centers (DSCs), the Records Holding Areas (RHA), or electronically stored in the Integrated Document Management System (IDMS), but is silent on the Passport database. TFC-BSM-IRM_DC-C-02 should clearly indicate the status of Passport regarding records retention. Interviews with procurement personnel determined that Passport retains information that may be considered to be record material. This issue is identified as **Observation SO-O16**.

ATTACHMENT A
PERSONNEL CONTACTED

Name	Title	Interview	Entrance Meeting	Exit Meeting
Anderson, CE	Technical Specialist, Security & Emergency Services/Events Investigation (PAAA), ESH&Q		X	X
Armstead, M	Manager – Prime Contracts, Business Operations	X		
Beranek, F	Manager – ESH&Q	X		X
Berman, HS	Manager - Engineering		X	
Bowman, TA	Operations Support Specialist, Safety & Health, ESH&Q	X		
Brown, RL	Performance Assurance/Corrective Action, ESH&Q		X	X
Burt, DL	Manager - EVMS Cert & Assurance, Project Integration	X		
Butler, RE	Safety URSWA, Construction and Commissioning, Project Integration	X		
Calderon, LM	Technical Specialist, Industrial Safety, Safety & Health, ESH&Q	X		X
Colosi, KA	Manager - IHLW Program, WTP Support	X		
Conrad, JS	Environmental Specialist, Environmental programs, ESH&Q	X		
Farner, ML	Construction and Commissioning, Project Integration			X
Flasch, MP	Performance Assurance/Corrective Action, ESH&Q		X	X
Flowers, LA	Safety Specialist – IS/IH, ESH&Q Business Operations, Base Operations	X		
Gaydosh, WL	Manager – Industrial Safety, ESH&Q	X		
Hatcher, KA	Manager – Procurement Services, Business Operations	X		
Janecke, JR	Procurement Specialist, Procurement Services, Business Operations	X	X	
Keith, LJ	Manager – Training, Workforce Resources	X		
Kubie, DL	Training Specialist, Training, Workforce Resources		X	
Kummer, DA	Training Specialist, Training, Workforce Resources	X		
Le, TM	Health Physicist, Radiological Controls, ESH&Q	X		
Lepka, SJ	Administrative Specialist - Project Controls, WTP Support	X		

ATTACHMENT A
PERSONNEL CONTACTED

Name	Title	Interview	Entrance Meeting	Exit Meeting
Lesko, AC	Manager - Records & Document Control, Business Operations	X		
Lesko, KF	Manager – Construction and Commissioning, Project Integration	X	X	
Lindholm, MA	Manager – SST Retrieval and Closure		X	
Maciuca, C	Manager – Performance Assurance/Corrective Action, ESH&Q		X	
Marshall, D	Accountant, Finance, Business Operations	X		
Martin, LK	Operations Specialist, Project Construction, Base Operations	X		X
May, SM	Project Cost Analyst, Project Controls, SST Retrieval and Closure	X		
McElroy, ML	Manager – Quality Assurance Services, ESH&Q	X		X
McLellan, GW	Manager - Project Management Systems, Project Integration	X		
Meyers, S	EFSI, Quality Assurance	X		
Netolicky, RA	Quality Assurance Engineer, Quality Assurance Services, ESH&Q	X		
Penick, LR	Operations Support Specialist, Performance Assurance/Corrective Action, ESH&Q	X	X	X
Peters, NL	Technical Specialist, Security & Emergency Services/Events Investigation, ESH&Q	X		
Powers, MJ	Safety Specialist, Safety/IH, ESH&Q Single-Shell Tank, SST Retrieval & Closure	X		
Reynolds, KD	EFSI, Sampling And Well Services	X		
Robinson, JM	Manager – Procurement Services, Business Operations	X	X	
Rolph, JT	Manager – Radiological Controls, ESH&Q	X		
Sax, SM	Manager – Project Operations		X	
Schaleger, JP	Safety Specialist, Industrial Safety, ESH&Q	X		
Silvia, MJ	Performance Assurance/Corrective Action, ESH&Q		X	X
Stickney, RG	Engineer, Central Design Authority and Standards, Engineering	X		
Stredwick, JR	Construction and Commissioning, Project Integration	X		

ATTACHMENT A
PERSONNEL CONTACTED

Name	Title	Interview	Entrance Meeting	Exit Meeting
Sydnor, H	Scientist, Operations Support – Vadose, SST Retrieval & Closure	X		
Taber, TK	Operations Support Specialist, Industrial Safety, ESH&Q	X		
Tifft, SR	Environmental Specialist, Environmental Compliance, ESH&Q	X		
Vacca, JE	Manager – Information Resources, Business Operations	X		
Van Meighem, JS	Technical Specialist – Interface Management, Project Integration	X		
Voogd, JA	Manager - Environmental Compliance, ESH&Q	X		
Wooley, TA	Environmental Specialist, Environmental Compliance, ESH&Q	X		
Zane, RW	Energy Solutions, Industrial Safety	X		

ATTACHMENT B
DOCUMENTS REVIEWED

- DOE Order 414.1C, *Quality Assurance*, approved 06-17-05
- 10CFR830, Subpart A, *Quality Assurance Requirements*
- INPO 05-002, *Human Performance Tools for Engineers – Practices for Anticipating, Preventing, and Catching Engineering Errors* (Vendor Oversight section)
- WRPS Contract DE-AC27-08RV14800, Modification No. M009, Section B, *Supplies or Services and Prices/Costs* and Section J-6, *Small Business Subcontracting Plan*
- Administrative Interface Agreement for Training Records Under Memorandum of Agreement No. CHG-FMOA-2001
- Interface Control Document between The Tank Farm Contractor and the Fluor Hanford Water Utilities Distribution System
- Washington River Protection Solutions LLC and Energy Solutions Federal Services LLC Affiliate Agreement for the DOE Tank Operations Contract #DE-AC-27-08RV14800
- Washington River Protection Solutions LLC and URS-Washington Division Affiliate Agreement for the DOE Tank Operations Contract #DE-AC-27-08RV14800
- Memorandum of Agreement MOA-WRPS-CHPRC-2008, Rev. 0, *Performance and Payment of Services*
- Memorandum of Agreement TOC-MOA-FH-0004, Rev. 0, *Performance and Payment of Services*
- Memorandum of Agreement TOC-MOA-PNNL-0002, Rev. 0, *Performance And Payment Of Services*
- Request for Offsite Services, Job No.29633_FY 2009 ROS No. 36472-03, *Characterize The Aerial Extent Of Mobile Contaminants For Placement Of Interim Barrier Using The Hydraulic Hammer Unit*
- Statement Of Work, Requisition #: 36472, *Drilling and Related Characterization Services*, Revision Number 0,Date September 9, 2008
- Subcontractor Oversight Plan for Contract Requisition 182012, dated 02/10/2009, *Design and Fabrication of Mobile Retrieval Arm System*
- *Audits/Surveillances,* DWO-QAP-001, dated 5/15/06, revision 9 Energy Solutions Condition Report FW-TSV-XR-08-003
- Energy Solutions Federal Services Internal Memo, Quality Assurance Internal Surveillance Report FS-08-IS-002, *Safety Surveillance of Energy Solutions Employee Performance at UPR 81*
- Energy Solutions Federal Services, Internal Memo CAM-08-4955, Quality Assurance Internal Surveillance Report FS-08-IS-001, *Completion Document for 241-UDirect Push Characterization Services*
- Energy Solutions Surveillance Report FS-08-IS-001, dated January 9, 2008, *Completion Document for 241-U Farm Direct Push Characterization Services*
- Energy Solutions Surveillance Report FS-08-IS-002, dated April 15, 2008, *Safety Surveillance of Energy Solutions Employee Performance at UPR-81*
- RPP-MP-003, Rev. 5c, *Integrated Environment, Safety, and Health Management System Description for the Tank Farm Contractor*
- RPP-8411, Rev. 1, *Washington River Protection Solutions Procurement Process Description*

ATTACHMENT B
DOCUMENTS REVIEWED

- *Training Implementation Matrix Per DOE Order 5480.20A*, Rev. 20A-3 dated September 2005
- *FY2009 – WRPS Integrated Assessment Schedule*, dated January 12, 2009
- 24590-WTP-PL-MG-01-001, Rev. 2, *Interface Management Plan* (WTP)
- *Washington River Protection Solutions Parent Organization Support Plan FY 2009*, approved August 29, 2008
- *Washington River Protection Solutions (WRPS) General Provisions*, dated November 20, 2008
- *Washington River Protection Solutions (WRPS) Commercial General Provisions*, dated November 20, 2008
- *Washington River Protection Solutions (WRPS) On-Site Work Provisions*, dated February 10, 2009
- *Washington River Protection Solutions Evaluated Supplier List*, dated October 28, 2008 (including the *Fluor Hanford Evaluated Supplier List*, dated February 13, 2009)
- HNF-MP-5184, Rev. 7, *Washington River Protection Solutions Radiation Protection Program*
- TFC-PLN-02, Rev. E-2, *Quality Assurance Program Description*
- TFC-PLN-43, Rev. A-13, *Tank Operations Contractor Health and Safety Plan*
- TFC-PLN-47, Rev. B-2, *Worker Safety and Health Program*
- TFC-PLN-55, Rev. A-2, *Industrial Hygiene Safety Management Program Plan*
- TFC-PLN-58, Rev, C, *Chemical Management Plan*
- TFC-PLN-73, Rev. B-5, *Environmental Protection and Compliance Plan*
- TFC-PLN-83, Rev. B, *Assurance System Program Description*
- TFC-PLN-102, Rev. A, *TOC Interface Management Plan*
- TFC-POL-16, Rev. B, *Integrated Safety Management System Policy*
- TFC-BSM-AC-C-04, Rev. B-4, *Intercompany Work Exchange Agreements*
- TFC-BSM-CP_CPR-C-02, Rev. A-11, *Noncompetitive Procurement Justification*
- TFC-BSM-CP_CPR-C-05, Rev. H-4, *Procurement of Services*
- TFC-BSM-CP_CPR-C-06, Rev. G-4, *Procurement of Items (Materials)*
- TFC-BSM-CP_CPR-C-09, Rev. B-13, *Supply Chain Process*
- TFC-BSM-CP_CPR-C-17, Rev. A-5, *Interface Management*
- TFC-BSM-CP_CPR-D-02-10, Rev. A-4, *Construction Contracting*
- TFC-BSM-CP_CPR-D-02-13, Rev. A-2, *Services from Other Hanford Prime Contractors*
- TFC-BSM-CP_CPR-D-04.1, Rev. A-2, *Good Subcontract Administration Practices*
- TFC-BSM-CP_CPR-D-04.5, Rev. A-4, *Subcontract Termination*
- TFC-BSM-CP_CPR-D-05.1, Rev. A-4, *Close-out Process*
- TFC-BSM-CP_CPR-D-16, Rev. B, *Preparation, Negotiation, Administration, and Completion of Performance Based Incentives*
- TFC-BSM-CP_CPR-P-04, Rev. A-10, *Subcontract Administration*
- TFC-BSM-CP_CPR-P-05, Rev. B-3, *Subcontract Closeout*
- TFC-ESHQ-S_SAF-C-07, Rev. B-6, *Subcontractor Oversight*
- TFC-ESHQ-Q_ADM-C-01, Rev. A-3, *Graded Quality Assurance*

ATTACHMENT B
DOCUMENTS REVIEWED

- TFC-ESHQ-Q_ADM-C-09, Rev. A-3, *Supplier Quality Assurance Program Evaluation*
- TFC-ESHQ-Q_PP-P-02, Rev. D-3, *Quality Assurance Surveillances*
- TFC-PRJ-CM-C-01, Rev. A-13, *Construction Management*
- TFC-PRJ-CM-C-05, Rev. A-3, *Construction Subcontractor Progress Meetings*
- TFC-PRJ-CM-C-08, Rev. B-2, *Construction Completion and Turnover*
- TFC-PRJ-CM-C-015, Rev. A-1, *Construction Subcontractor Closeout*
- Form A-6003-991, Rev. 06/05, *Subcontractor Oversight Plan* (Screening Form)
- Key Word Search 'Interface' of the Problem Evaluation Request Database for the 3-Year Period Ending January 30, 2009
- Key Word Search 'Oversight' of the Problem Evaluation Request Database for the 3-Year Period Ending January 29, 2009
- Key Word Search 'Subcontractor' of the Problem Evaluation Request Database for the 3-Year Period Ending January 29, 2009
- *Independent Assessment of Worker Safety and Health Program, FY2008-CH2M-I-0005, dated June 24, 2008*
- *PAAA Program Review/Self Assessment, Management Assessment Report FY2008-SHQ-M-0159*, dated May 29, 2008
- *Subcontractor Oversight Process,* Management Assessment, FY2007-SHQ-M-0135 dated March 26, 2007
- *Interface Program – Management Assessment Report FY2006-SPPC-M-0150*, dated September 26, 2006
- *CH2M HILL Corporate Independent Assessment of CHG Hanford Tank Farm Activities*, dated January 13, 2006
- *Contractor Reporting of Non-Compliances, Management Assessment FY2006-PAAA-M-0156*, dated December 28, 2005
- *QA Management Assessment of Subcontractor/Vendor QA Implementation Plans – FY2006-QA-M-0122*, dated December 21, 2005
- *Management Assessment of Contractor Flow Down of Requirements*, FY2005-PA-M-0175, dated June 5, 2005
- *River Protection Project Quality Assurance Audit Report RPP-A-02-09, Revision 0, Construction Quality Requirement Flow-Down and Subcontractor Oversight*, dated November 25, 2002

Save

Problem Evaluation Request (PER)

WRPS-PER-2009-0598
Closed 04/15/2009 09:30

PER No	Date of Discovery	Time of Discovery (24:00)	Project
WRPS-PER-2009-0598	04/08/2009	10:00	Day Ops-E

Location

AY Farm

How Was Problem Discovered

Radiological Surveys

Description of Concern or Problem

The Gate #8 area was found to have the VCZ not posted correctly. The gate was posted but the north boundary along AN farm wasn't posted. Evidently it hasn't been posted correctly since the start of the outage.

Requirement Not Satisfied	Source Document Number

Equipment Identification Number	System Identification

Immediate actions Taken or Planned

Notified the shift office.

Recommended Corrective actions

Originator Contact

I would like to review the the corrective actions at closure to ensure they were effective

Originators Name	Originators ID	Originators Phone	Date Initiated
Chrystal, Carrol R	H0063087	(509) 373-2526	04/08/2009

SHIFT OPERATIONS REVIEW

Title

Vapor Control Zone at Gate Eight Corridor

How Discovered	Agency
self-ID prior to event	

Reportability	SSC Operability	Operability Review	Comp Measures Req
Non-Reportable	N/A	N/A	

Describe actions Taken or Recommended

BO Shift Office verified AY/AZ farm properly posted VCZ.

SO Reviewer Name	SO Reviewer ID	SO Reviewer Phone	SO Review Date
Higham, Dale B	H0078950	(509) 373-2689	04/09/2009

SCREENING

PER Significance Level	
Trend Only	

Independent Assessment Review	Occurrence Report Number	Externally Identified	
No		No	

Assigned Responsible Manager	Facilities Rep / SSO	Safety Management Rep	
Owen, Pete			

Program	Safety Management Program
• N/A	• ^N/A^

PER Screening Comments

See Shift Office comments - No further action required.
(Nancy Brown 04/09/09)

RE-SCREEN REQUEST (Prior to Launch): I do not control the posting of VCZs for my facilities. If the farm was posted incorrectly, the corrective action belongs with the posting organization.
Chris Woehle (04/09/09)

RE-SCREEN REQUEST (Prior to Launch):
I believe Shift is responsible for posting the farms. This should be assigned to Pete Owen.
Randy Cook (04/13/09)

RE-SCREEN COMMENTS: Change from Randy Cook to Pete Owen.
(Nancy Brown 04/14/09)

Causal Code			
MGT/Comm/Train	**Human Performance**	**GEMS**	**Equip/Eng/Other**
Failed Barrier	**ORPS Code**	**Functional Area**	**Work Process**
	Not Applicable	Operations	• Field Walk Down
ISMS	**Consequence Code**		
Provide feedback and continuous improvement	• ^N/A^ - No consequence code applies		
PER Screening Chair	**PER Screening Chair ID**	**PER Screening Chair Phone**	**PER Screening Date**
Brown, Nancy L	H0088797	(509) 373-0992	04/09/2009
PAAA REVIEW			
PAAA Screening	**PAAA Codes**	**Function Codes**	
PAAA, Non-NTS Reportable	• 10 CFR 851.23 (a)(7)	• Chemical Exposure	
NTS Report Number	**NTS Report Date**		
Repetitive / Recurrent	**Programmatic**	**Intentional Violation / Misrepresentation**	
No	No	No	
PAAA Screening Comments			
PAAA Reviewer Name	**PAAA Review Date**		
Anderson, Craig E	04/09/2009		
PAAA Approver Name	**PAAA Approve Date**		
Anderson, Craig E	04/09/2009		
SENIOR MANAGEMENT REVIEW/CONCURRENCE			
TF Operations Morning Leadership Call			
Instructions for Responsible Manager			
Senior Management	**Sr Mgmt ID**	**Sr Mgmt Phone**	**Sr Mgmt Review Date**
ATTACHMENTS			
Link to PER			
AUDIT HISTORY			
Change Date	**Auditor**	**Comments**	
04/10/2009 07:41	Brown, Nancy L	'PER Screening Comments' was changed.	
04/10/2009 14:23	Brown, Nancy L	'Assigned Responsible Manager' was changed. 'Functional Area' was changed.	

04/13/2009 09:52	Brown, Nancy L	'PER Screening Comments' was changed.
04/14/2009 09:54	Brown, Nancy L	'Screening Safety Managemnt Program' was changed. 'Functional Area' was changed. 'Selected Consequence Codes' have changed.
04/14/2009 14:06	Brown, Nancy L	'Assigned Responsible Manager' was changed. 'PER Screening Comments' was changed.

-- End of Report --
04/15/2009 09:45 AM

Task# WRPS-PER-2009-0598

E-STARS[R] Report
Task Detail Report
04/15/2009 0945

TASK INFORMATION			
Task#	WRPS-PER-2009-0598		
Subject	TREND; Vapor Control Zone at Gate Eight Corridor		
Parent Task#		Status	CLOSED 04/15/2009
Reference		Due	04/10/2009
Originator	^PER Coordinator	Priority	Medium
Originator Phone		Category	PER
Origination Date	04/08/2009 1610	Generic1	None
Remote Task#		Generic2	None
Deliverable	PER Review	Generic3	None
Class	None	View Permissions	Global
Instructions	*No Instructions*		

ROUTING LISTS		
1	Review Initial PER	Inactive
	Review New PER	
	• ^SO(Higham, Dale B) - Review - Concur - 04/09/2009 0042 *Instructions:*	
	• ^PER Screening(Brown, Nancy L) - Review - Concur - 04/09/2009 1416 *Instructions:*	
	• ^Mgr Review - Review - Withdrawn - 04/10/2009 0741 *Instructions:*	
	• ^PER Screening(Brown, Nancy L) - Review - Concur - 04/10/2009 1423 *Instructions:*	
	• ^Mgr Review - Review - Withdrawn - 04/13/2009 0953 *Instructions:*	
	• ^PER Screening(Brown, Nancy L) - Review - Concur - 04/14/2009 1406 *Instructions:*	
	• ^Mgr Review - Review - Cancelled - 04/15/2009 0927 *Instructions:*	

ATTACHMENTS	

Task# WRPS-PER-2009-0598			
Attachments	1. Link to PER		
COMMENTS			
No Comments			
TASK DUE DATE HISTORY			
Modified	04/08/2009 1610 - ^PER Coordinator	New Due Date	04/10/2009 1630
SUB TASK HISTORY			
No Subtasks			
-- end of report --			

Save

Problem Evaluation Request (PER)

WRPS-PER-2009-0600
Closed 04/13/2009 13:00

PER No	Date of Discovery	Time of Discovery (24:00)	Project
WRPS-PER-2009-0600	03/31/2009	00:00	Base Ops

Location

242A

How Was Problem Discovered

Routine Work

Description of Concern or Problem

TREND ONLY - NO ACTION REQUIRED. This PER is written for automated PAAA/WSH trending purposes only. March 2009 First Aid Case. Assign to Craig Anderson, PAAA/WSH.

200E/242-A – Base Ops: Evaporator Operations, Shift Office – FIRST AID – While reading procedure, employee lacerated finger. Employee elected to self treat with management concurrence.

Requirement Not Satisfied	Source Document Number
None	
Equipment Identification Number	**System Identification**

Immediate actions Taken or Planned

None. Employee elected to self-treat.

Recommended Corrective actions

None

Originator Contact

No

Originators Name	Originators ID	Originators Phone	Date Initiated
Anderson, Craig E	H0001274	(509) 372-3940	04/09/2009

SHIFT OPERATIONS REVIEW

Title

PAAA/WSH trending purposes only. March 2009 First Aid Case

How Discovered	Agency
self-ID prior to event	

Reportability	SSC Operability	Operability Review	Comp Measures Req
Non-Reportable	N/A	N/A	

Describe actions Taken or Recommended

No immediate BO SO actions identified.

SO Reviewer Name	SO Reviewer ID	SO Reviewer Phone	SO Review Date
Wallgren, Carl B	H0099480	(509) 373-2689	04/09/2009

SCREENING

PER Significance Level	
Trend Only	

Independent Assessment Review	Occurrence Report Number	Externally Identified	
No		No	
Assigned Responsible Manager	**Facilities Rep / SSO**	**Safety Management Rep**	
Anderson, Craig E			

Program	Safety Management Program
• N/A	• Safety & Health

PER Screening Comments			
No comments (Nancy Brown 04/10/09)			
Causal Code			
MGT/Comm/Train	**Human Performance**	**GEMS**	**Equip/Eng/Other**
Failed Barrier	**ORPS Code**	**Functional Area**	**Work Process**
	Not Applicable	Occupational Safety and Health	• Office Safety
ISMS	**Consequence Code**		
Identify and analyze hazards	• Injury/Other - Minor injuries or illnesses, first aid items - not captured in other consequence categories		
PER Screening Chair	**PER Screening Chair ID**	**PER Screening Chair Phone**	**PER Screening Date**
Brown, Nancy L	H0088797	(509) 373-0992	04/10/2009
PAAA REVIEW			
PAAA Screening	**PAAA Codes**	**Function Codes**	
Not subject to PAAA			
NTS Report Number	**NTS Report Date**		
Repetitive / Recurrent	**Programmatic**	**Intentional Violation / Misrepresentation**	
No	No	No	
PAAA Screening Comments			
PAAA Reviewer Name	**PAAA Review Date**		
Anderson, Craig E	04/10/2009		
PAAA Approver Name	**PAAA Approve Date**		
Anderson, Craig E	04/10/2009		
SENIOR MANAGEMENT REVIEW/CONCURRENCE			
TF Operations Morning Leadership Call			
N/A			
Instructions for Responsible Manager			
Senior Management	**Sr Mgmt ID**	**Sr Mgmt Phone**	**Sr Mgmt Review Date**
Brown, Nancy L	H0088797	(509) 373-0992	04/13/2009
ATTACHMENTS			
Link to PER			

-- End of Report --
04/13/2009 01:15 PM

Task# WRPS-PER-2009-0600			
E-STARS[R] Report Task Detail Report 04/13/2009 0115			
TASK INFORMATION			
Task#	WRPS-PER-2009-0600		
Subject	TREND'; PAAA/WSH trending purposes only. March 2009 First Aid Case		
Parent Task#		Status	CLOSED 04/13/2009
Reference		Due	04/11/2009
Originator	^PER Coordinator	Priority	Medium
Originator Phone		Category	PER
Origination Date	04/09/2009 1021	Generic1	None
Remote Task#		Generic2	None
Deliverable	PER Review	Generic3	None
Class	None	View Permissions	Global
Instructions	*No Instructions*		
ROUTING LISTS			
1	Review Initial PER		Inactive
	Review New PER		
	• ^SO(Wallgren, Carl B) - Review - Concur - 04/09/2009 1053 *Instructions:*		
	• ^PER Screening(Brown, Nancy L) - Review - Concur - 04/10/2009 1157 *Instructions:*		
	• ^Mgr Review(Brown, Nancy L) - Review - Concur - 04/13/2009 1036 *Instructions:*		
ATTACHMENTS			
Attachments	1. Link to PER		
COMMENTS			
No Comments			
TASK DUE DATE HISTORY			
Modified	04/09/2009 1021 - ^PER Coordinator	New Due Date	04/11/2009 1630
SUB TASK HISTORY			
No Subtasks			
-- end of report --			

Save

Problem Evaluation Request (PER)

WRPS-PER-2009-0601
Closed 04/13/2009 13:00

PER No	Date of Discovery	Time of Discovery (24:00)	Project
WRPS-PER-2009-0601	03/30/2009	00:00	Base Ops

Location

CR Vault

How Was Problem Discovered

Routine Work

Description of Concern or Problem

TREND ONLY - NO ACTION REQUIRED. This PER is written for automated PAAA/WSH trending purposes only. March 2009 First Aid Case. Assign to Craig Anderson, PAAA/WSH.

200E/244CR – Base Ops: Maintenance/Work Execution, West Maintenance, Paint/Insulation – FIRST AID – Exiting vehicle, employee slipped off step bar hitting back on door frame. Employee was treated at AMH and returned to work with no restrictions.

Requirement Not Satisfied	Source Document Number
None	
Equipment Identification Number	**System Identification**

Immediate actions Taken or Planned

Employee was treated at AMH and returned to work without restrictions.

Recommended Corrective actions

Originator Contact

No

Originators Name	Originators ID	Originators Phone	Date Initiated
Anderson, Craig E	H0001274	(509) 372-3940	04/09/2009

SHIFT OPERATIONS REVIEW

Title

PAAA/WSH trending purposes only. March 2009 First Aid Case.

How Discovered	Agency
self-ID prior to event	

Reportability	SSC Operability	Operability Review	Comp Measures Req
Non-Reportable	N/A	N/A	

Describe actions Taken or Recommended

No immediate BO SO actions identified.

SO Reviewer Name	SO Reviewer ID	SO Reviewer Phone	SO Review Date
Wallgren, Carl B	H0099480	(509) 373-2689	04/09/2009

SCREENING

PER Significance Level			
Trend Only			
Independent Assessment Review	**Occurrence Report Number**	**Externally Identified**	
No		No	
Assigned Responsible Manager	**Facilities Rep / SSO**	**Safety Management Rep**	
Anderson, Craig E			

Program	Safety Management Program

• N/A		• Safety & Health	
PER Screening Comments			
RE-SCREEN COMMENTS: Change from Chris Woehle to Dave Brown. (Nancy Brown 04/10/09)			
Causal Code			
MGT/Comm/Train	**Human Performance**	**GEMS**	**Equip/Eng/Other**
Failed Barrier	**ORPS Code**	**Functional Area**	**Work Process**
	Not Applicable	Occupational Safety and Health	• Walking and Working Surfaces
ISMS	**Consequence Code**		
Identify and analyze hazards	• Injury/Other - Minor injuries or illnesses, first aid items - not captured in other consequence categories • Slips, Trips, Falls - Slips, Trips, Falls that may/or may not have resulted in Injury		
PER Screening Chair	**PER Screening Chair ID**	**PER Screening Chair Phone**	**PER Screening Date**
Brown, Nancy L	H0088797	(509) 373-0992	04/10/2009
PAAA REVIEW			
PAAA Screening	**PAAA Codes**	**Function Codes**	
Not subject to PAAA			
NTS Report Number	**NTS Report Date**		
Repetitive / Recurrent	**Programmatic**	**Intentional Violation / Misrepresentation**	
No	No	No	
PAAA Screening Comments			
PAAA Reviewer Name	**PAAA Review Date**		
Anderson, Craig E	04/10/2009		
PAAA Approver Name	**PAAA Approve Date**		
Anderson, Craig E	04/10/2009		
SENIOR MANAGEMENT REVIEW/CONCURRENCE			
TF Operations Morning Leadership Call			
N/A			
Instructions for Responsible Manager			
Senior Management	**Sr Mgmt ID**	**Sr Mgmt Phone**	**Sr Mgmt Review Date**
Brown, Nancy L	H0088797	(509) 373-0992	04/13/2009
ATTACHMENTS			
Link to PER			

-- End of Report --
04/13/2009 01:15 PM

Task# WRPS-PER-2009-0601

E-STARS[R] Report
Task Detail Report
04/13/2009 0115

TASK INFORMATION

Task#	WRPS-PER-2009-0601		
Subject	TREND; PAAA/WSH trending purposes only. March 2009 First Aid Case.		
Parent Task#		Status	CLOSED 04/13/2009
Reference		Due	04/11/2009
Originator	^PER Coordinator	Priority	Medium
Originator Phone		Category	PER
Origination Date	04/09/2009 1025	Generic1	None
Remote Task#		Generic2	None
Deliverable	PER Review	Generic3	None
Class	None	View Permissions	Global
Instructions	*No Instructions*		

ROUTING LISTS

1	Review Initial PER	Inactive
	Review New PER	
	• ^SO(Wallgren, Carl B) - Review - Concur - 04/09/2009 1054 *Instructions:*	
	• ^PER Screening(Brown, Nancy L) - Review - Concur - 04/10/2009 1200 *Instructions:*	
	• ^Mgr Review(Brown, Nancy L) - Review - Concur - 04/13/2009 1036 *Instructions:*	

ATTACHMENTS

Attachments	1. Link to PER

COMMENTS

No Comments

TASK DUE DATE HISTORY

Modified	04/09/2009 1025 - ^PER Coordinator	New Due Date	04/11/2009 1630

SUB TASK HISTORY

No Subtasks

-- end of report --

Save

Problem Evaluation Request (PER)

WRPS-PER-2009-0602
Closed 04/13/2009 13:15

PER No	Date of Discovery	Time of Discovery (24:00)	Project
WRPS-PER-2009-0602	03/26/2009	00:00	Base Ops

Location

CR Vault

How Was Problem Discovered

Routine Work

Description of Concern or Problem

TREND ONLY - NO ACTION REQUIRED. This PER is written for automated PAAA/WSH trending purposes only. March 2009 First Aid Case. Assign to Craig Anderson, PAAA/WSH.

200E/244CR – Base Ops: Maintenance/Work Execution, East Day Operations – FIRST AID – When lifting laundry bags and cases of water employee felt pain in left shoulder. Employee treated at AMH and returned to work with restrictions that do not impact routine duties.

Requirement Not Satisfied	Source Document Number
None	
Equipment Identification Number	**System Identification**

Immediate actions Taken or Planned

Employee treated at AMH and returned to work with restrictions that do not impact routine duties.

Recommended Corrective actions

Originator Contact

No

Originators Name	Originators ID	Originators Phone	Date Initiated
Anderson, Craig E	H0001274	(509) 372-3940	04/09/2009

SHIFT OPERATIONS REVIEW

Title

PAAA/WSH trending purposes only. March 2009 First Aid Case.

How Discovered	Agency
self-ID prior to event	

Reportability	SSC Operability	Operability Review	Comp Measures Req
Non-Reportable	N/A	N/A	

Describe actions Taken or Recommended

No immediate BO SO actions identified.

SO Reviewer Name	SO Reviewer ID	SO Reviewer Phone	SO Review Date
Wallgren, Carl B	H0099480	(509) 373-2689	04/09/2009

SCREENING

PER Significance Level	
Trend Only	

Independent Assessment Review	Occurrence Report Number	Externally Identified	
No		No	
Assigned Responsible Manager	**Facilities Rep / SSO**	**Safety Management Rep**	
Anderson, Craig E			

Program	Safety Management Program
• N/A	• Safety & Health

PER Screening Comments			
No comments. (Nancy Brown 04/10/09)			
Causal Code			
MGT/Comm/Train	**Human Performance**	**GEMS**	**Equip/Eng/Other**
Failed Barrier	**ORPS Code**	**Functional Area**	**Work Process**
	Not Applicable	Occupational Safety and Health	• Other
ISMS	**Consequence Code**		
Identify and analyze hazards	• Injury/Other - Minor injuries or illnesses, first aid items - not captured in other consequence categories		
PER Screening Chair	**PER Screening Chair ID**	**PER Screening Chair Phone**	**PER Screening Date**
Brown, Nancy L	H0088797	(509) 373-0992	04/10/2009
PAAA REVIEW			
PAAA Screening	**PAAA Codes**	**Function Codes**	
Not subject to PAAA			
NTS Report Number	**NTS Report Date**		
Repetitive / Recurrent	**Programmatic**	**Intentional Violation / Misrepresentation**	
No	No	No	
PAAA Screening Comments			
PAAA Reviewer Name	**PAAA Review Date**		
Anderson, Craig E	04/10/2009		
PAAA Approver Name	**PAAA Approve Date**		
Anderson, Craig E	04/10/2009		
SENIOR MANAGEMENT REVIEW/CONCURRENCE			
TF Operations Morning Leadership Call			
N/A			
Instructions for Responsible Manager			
Senior Management	**Sr Mgmt ID**	**Sr Mgmt Phone**	**Sr Mgmt Review Date**
Brown, Nancy L	H0088797	(509) 373-0992	04/13/2009
ATTACHMENTS			
Link to PER			

-- End of Report --
04/13/2009 01:15 PM

Task# WRPS-PER-2009-0602

E-STARS[R] Report
Task Detail Report
04/13/2009 0115

TASK INFORMATION			
Task#	WRPS-PER-2009-0602		
Subject	TREND; PAAA/WSH trending purposes only. March 2009 First Aid Case.		
Parent Task#		Status	CLOSED 04/13/2009
Reference		Due	04/11/2009
Originator	^PER Coordinator	Priority	Medium
Originator Phone		Category	PER
Origination Date	04/09/2009 1027	Generic1	None
Remote Task#		Generic2	None
Deliverable	PER Review	Generic3	None
Class	None	View Permissions	Global
Instructions	*No Instructions*		

ROUTING LISTS		
1	Review Initial PER	Inactive
	Review New PER	
	• ^SO(Wallgren, Carl B) - Review - Concur - 04/09/2009 1055 *Instructions:*	
	• ^PER Screening(Brown, Nancy L) - Review - Concur - 04/10/2009 1204 *Instructions:*	
	• ^Mgr Review(Brown, Nancy L) - Review - Concur - 04/13/2009 1037 *Instructions:*	

ATTACHMENTS	
Attachments	1. Link to PER

COMMENTS

No Comments

TASK DUE DATE HISTORY			
Modified	04/09/2009 1027 - ^PER Coordinator	New Due Date	04/11/2009 1630

SUB TASK HISTORY

No Subtasks

-- end of report --

Save

Problem Evaluation Request (PER)

WRPS-PER-2009-0603
Closed 04/13/2009 13:15

PER No	Date of Discovery	Time of Discovery (24:00)	Project
WRPS-PER-2009-0603	03/25/2009	00:00	Base Ops

Location

OTHER

How Was Problem Discovered

Routine Work

Description of Concern or Problem

TREND ONLY - NO ACTION REQUIRED. This PER is written for automated PAAA/WSH trending purposes only. March 2009 First Aid Case. Assign to Craig Anderson, PAAA/WSH.

200E/2704HV – BASE OPS: Shift Operations – FIRST AID – Returning from a meeting, employee slipped on rocks and felt a twinge in back. Employee was treated at AMH and returned to work with no restrictions.

Requirement Not Satisfied	Source Document Number
None	

Equipment Identification Number	System Identification

Immediate actions Taken or Planned

Employee was treated at AMH and returned to work with no restrictions.

Recommended Corrective actions

Originator Contact

No

Originators Name	Originators ID	Originators Phone	Date Initiated
Anderson, Craig E	H0001274	(509) 372-3940	04/09/2009

SHIFT OPERATIONS REVIEW

Title

PAAA/WSH trending purposes only. March 2009 First Aid Case

How Discovered	Agency
self-ID prior to event	

Reportability	SSC Operability	Operability Review	Comp Measures Req
Non-Reportable	N/A	N/A	

Describe actions Taken or Recommended

No immediate BO SO actions identified.

SO Reviewer Name	SO Reviewer ID	SO Reviewer Phone	SO Review Date
Wallgren, Carl B	H0099480	(509) 373-2689	04/09/2009

SCREENING

PER Significance Level	
Trend Only	

Independent Assessment Review	Occurrence Report Number	Externally Identified	
No		No	

Assigned Responsible Manager	Facilities Rep / SSO	Safety Management Rep	
Anderson, Craig E			

Program	Safety Management Program
• N/A	• Safety & Health

PER Screening Comments			
No comments. (Nancy Brown 04/10/09)			
Causal Code			
MGT/Comm/Train	**Human Performance**	**GEMS**	**Equip/Eng/Other**
Failed Barrier	**ORPS Code**	**Functional Area**	**Work Process**
	Not Applicable	Occupational Safety and Health	• Walking and Working Surfaces
ISMS	**Consequence Code**		
Identify and analyze hazards	• Injury/Other - Minor injuries or illnesses, first aid items - not captured in other consequence categories • Slips, Trips, Falls - Slips, Trips, Falls that may/or may not have resulted in Injury		
PER Screening Chair	**PER Screening Chair ID**	**PER Screening Chair Phone**	**PER Screening Date**
Brown, Nancy L	H0088797	(509) 373-0992	04/10/2009
PAAA REVIEW			
PAAA Screening	**PAAA Codes**	**Function Codes**	
Not subject to PAAA			
NTS Report Number	**NTS Report Date**		
Repetitive / Recurrent	**Programmatic**	**Intentional Violation / Misrepresentation**	
No	No	No	
PAAA Screening Comments			
PAAA Reviewer Name	**PAAA Review Date**		
Anderson, Craig E	04/10/2009		
PAAA Approver Name	**PAAA Approve Date**		
Anderson, Craig E	04/10/2009		
SENIOR MANAGEMENT REVIEW/CONCURRENCE			
TF Operations Morning Leadership Call			
N/A			
Instructions for Responsible Manager			
Senior Management	**Sr Mgmt ID**	**Sr Mgmt Phone**	**Sr Mgmt Review Date**
Brown, Nancy L	H0088797	(509) 373-0992	04/13/2009
ATTACHMENTS			
Link to PER			

-- End of Report --
04/13/2009 01:15 PM

Task# WRPS-PER-2009-0603

E-STARS[R] Report
Task Detail Report
04/13/2009 0115

TASK INFORMATION

Task#	WRPS-PER-2009-0603		
Subject	TREND; PAAA/WSH trending purposes only. March 2009 First Aid Case.		
Parent Task#		Status	CLOSED 04/13/2009
Reference		Due	04/11/2009
Originator	^PER Coordinator	Priority	Medium
Originator Phone		Category	PER
Origination Date	04/09/2009 1030	Generic1	None
Remote Task#		Generic2	None
Deliverable	PER Review	Generic3	None
Class	None	View Permissions	Global
Instructions	*No Instructions*		

ROUTING LISTS

1	Review Initial PER	Inactive
	Review New PER	
	• ^SO(Wallgren, Carl B) - Review - Concur - 04/09/2009 1056 *Instructions:*	
	• ^PER Screening(Brown, Nancy L) - Review - Concur - 04/10/2009 1206 *Instructions:*	
	• ^Mgr Review(Brown, Nancy L) - Review - Concur - 04/13/2009 1037 *Instructions:*	

ATTACHMENTS

Attachments	1. Link to PER

COMMENTS

No Comments

TASK DUE DATE HISTORY

Modified	04/09/2009 1030 - ^PER Coordinator	New Due Date	04/11/2009 1630

SUB TASK HISTORY

No Subtasks

-- end of report --

Save

Problem Evaluation Request (PER)

WRPS-PER-2009-0604
Closed 04/13/2009 13:15

PER No	Date of Discovery	Time of Discovery (24:00)	Project
WRPS-PER-2009-0604	03/19/2009	00:00	Base Ops

Location

222S

How Was Problem Discovered

Routine Work

Description of Concern or Problem

TREND ONLY - NO ACTION REQUIRED. This PER is written for automated PAAA/WSH trending purposes only. March 2009 First Aid Case. Assign to Craig Anderson, PAAA/WSH.

200W/222-S – BASE OPS: 222-S Laboratory: Facility, Operations – FIRST AID – Opening a discharge valve, employee hand slipped against pipe flange causing as abrasion. Employee elected to self treat with management concurrence.

Requirement Not Satisfied	Source Document Number
None	
Equipment Identification Number	**System Identification**

Immediate actions Taken or Planned

Employee elected to self treat with management concurrence.

Recommended Corrective actions

Originator Contact

No

Originators Name	Originators ID	Originators Phone	Date Initiated
Anderson, Craig E	H0001274	(509) 372-3940	04/09/2009

SHIFT OPERATIONS REVIEW

Title

PAAA/WSH trending purposes only. March 2009 First Aid Case.

How Discovered	Agency
self-ID prior to event	

Reportability	SSC Operability	Operability Review	Comp Measures Req
Non-Reportable	N/A	N/A	

Describe actions Taken or Recommended

No immediate BO SO actions identified.

SO Reviewer Name	SO Reviewer ID	SO Reviewer Phone	SO Review Date
Wallgren, Carl B	H0099480	(509) 373-2689	04/09/2009

SCREENING

PER Significance Level	
Trend Only	

Independent Assessment Review	Occurrence Report Number	Externally Identified	
No		No	
Assigned Responsible Manager	**Facilities Rep / SSO**	**Safety Management Rep**	
Anderson, Craig E			

Program	Safety Management Program
• N/A	• Safety & Health

PER Screening Comments			
No comments. (Nancy Brown 04/10/09)			
Causal Code			
MGT/Comm/Train	**Human Performance**	**GEMS**	**Equip/Eng/Other**
Failed Barrier	**ORPS Code**	**Functional Area**	**Work Process**
	Not Applicable	Occupational Safety and Health	• ^N/A^
ISMS	**Consequence Code**		
Identify and analyze hazards	• Injury/Other - Minor injuries or illnesses, first aid items - not captured in other consequence categories • Slips, Trips, Falls - Slips, Trips, Falls that may/or may not have resulted in Injury		
PER Screening Chair	**PER Screening Chair ID**	**PER Screening Chair Phone**	**PER Screening Date**
Brown, Nancy L	H0088797	(509) 373-0992	04/10/2009
PAAA REVIEW			
PAAA Screening	**PAAA Codes**	**Function Codes**	
Not subject to PAAA			
NTS Report Number	**NTS Report Date**		
Repetitive / Recurrent	**Programmatic**	**Intentional Violation / Misrepresentation**	
No	No	No	
PAAA Screening Comments			
PAAA Reviewer Name	**PAAA Review Date**		
Anderson, Craig E	04/10/2009		
PAAA Approver Name	**PAAA Approve Date**		
Anderson, Craig E	04/10/2009		
SENIOR MANAGEMENT REVIEW/CONCURRENCE			
TF Operations Morning Leadership Call			
N/A			
Instructions for Responsible Manager			
Senior Management	**Sr Mgmt ID**	**Sr Mgmt Phone**	**Sr Mgmt Review Date**
Brown, Nancy L	H0088797	(509) 373-0992	04/13/2009
ATTACHMENTS			
Link to PER			

-- End of Report --
04/13/2009 01:15 PM

Task# WRPS-PER-2009-0604

E-STARS[R] Report
Task Detail Report
04/13/2009 0115

TASK INFORMATION			
Task#	WRPS-PER-2009-0604		
Subject	TREND; PAAA/WSH trending purposes only. March 2009 First Aid Case.		
Parent Task#		Status	CLOSED 04/13/2009
Reference		Due	04/11/2009
Originator	^PER Coordinator	Priority	Medium
Originator Phone		Category	PER
Origination Date	04/09/2009 1031	Generic1	None
Remote Task#		Generic2	None
Deliverable	PER Review	Generic3	None
Class	None	View Permissions	Global
Instructions	*No Instructions*		

ROUTING LISTS		
1	Review Initial PER	Inactive
	Review New PER	
	• ^SO(Wallgren, Carl B) - Review - Concur - 04/09/2009 1057 *Instructions:*	
	• ^PER Screening(Brown, Nancy L) - Review - Concur - 04/10/2009 1209 *Instructions:*	
	• ^Mgr Review(Brown, Nancy L) - Review - Concur - 04/13/2009 1037 *Instructions:*	

ATTACHMENTS	
Attachments	1. Link to PER

COMMENTS

No Comments

TASK DUE DATE HISTORY			
Modified	04/09/2009 1031 - ^PER Coordinator	New Due Date	04/11/2009 1630

SUB TASK HISTORY

No Subtasks

-- end of report --

Save

Problem Evaluation Request (PER)

WRPS-PER-2009-0605
Closed 04/13/2009 13:15

PER No	Date of Discovery	Time of Discovery (24:00)	Project
WRPS-PER-2009-0605	03/18/2009	00:00	Base Ops

Location

2704HV

How Was Problem Discovered

Routine Work

Description of Concern or Problem

TREND ONLY - NO ACTION REQUIRED. This PER is written for automated PAAA/WSH trending purposes only. March 2009 First Aid Case. Assign to Craig Anderson, PAAA/WSH.

200E/2704HV – BASE OPS: Maintenance/Work Execution, Electrical – FIRST AID – While working on light fixtures, employee experienced back pain. Employee was treated at AMH and returned to work with restrictions that do not impact routine duties.

Requirement Not Satisfied	Source Document Number
None	

Equipment Identification Number	System Identification

Immediate actions Taken or Planned

Employee was treated at AMH and returned to work with restrictions that do not impact routine duties.

Recommended Corrective actions

Originator Contact

No

Originators Name	Originators ID	Originators Phone	Date Initiated
Anderson, Craig E	H0001274	(509) 372-3940	04/09/2009

SHIFT OPERATIONS REVIEW

Title

This PER is written for automated PAAA/WSH trending purposes only. March 2009 First Aid Case

How Discovered	Agency
self-ID prior to event	

Reportability	SSC Operability	Operability Review	Comp Measures Req
Non-Reportable	N/A	N/A	

Describe actions Taken or Recommended

No immediate BO SO actions identified.

SO Reviewer Name	SO Reviewer ID	SO Reviewer Phone	SO Review Date
Wallgren, Carl B	H0099480	(509) 373-2689	04/09/2009

SCREENING

PER Significance Level	
Trend Only	

Independent Assessment Review	Occurrence Report Number	Externally Identified	
No		No	

Assigned Responsible Manager	Facilities Rep / SSO	Safety Management Rep	
Anderson, Craig E			

Program	Safety Management Program

• N/A		• Safety & Health	
PER Screening Comments			
No comments. (Nancy Brown 04/10/09)			
Causal Code			
MGT/Comm/Train	**Human Performance**	**GEMS**	**Equip/Eng/Other**
Failed Barrier	**ORPS Code**	**Functional Area**	**Work Process**
	Not Applicable	Occupational Safety and Health	• ^N/A^
ISMS	**Consequence Code**		
Identify and analyze hazards	• Injury/Other - Minor injuries or illnesses, first aid items - not captured in other consequence categories		
PER Screening Chair	**PER Screening Chair ID**	**PER Screening Chair Phone**	**PER Screening Date**
Brown, Nancy L	H0088797	(509) 373-0992	04/10/2009
PAAA REVIEW			
PAAA Screening	**PAAA Codes**	**Function Codes**	
Not subject to PAAA			
NTS Report Number	**NTS Report Date**		
Repetitive / Recurrent	**Programmatic**	**Intentional Violation / Misrepresentation**	
No	No	No	
PAAA Screening Comments			
PAAA Reviewer Name	**PAAA Review Date**		
Anderson, Craig E	04/10/2009		
PAAA Approver Name	**PAAA Approve Date**		
Anderson, Craig E	04/10/2009		
SENIOR MANAGEMENT REVIEW/CONCURRENCE			
TF Operations Morning Leadership Call			
N/A			
Instructions for Responsible Manager			
Senior Management	**Sr Mgmt ID**	**Sr Mgmt Phone**	**Sr Mgmt Review Date**
Brown, Nancy L	H0088797	(509) 373-0992	04/13/2009
ATTACHMENTS			
Link to PER			

-- End of Report --
04/13/2009 01:15 PM

Task# WRPS-PER-2009-0605			
E-STARS[R] Report Task Detail Report 04/13/2009 0115			
TASK INFORMATION			
Task#	WRPS-PER-2009-0605		
Subject	TREND; This PER is written for automated PAAA/WSH trending purposes only. March 2009 First Aid Case		
Parent Task#		Status	CLOSED 04/13/2009
Reference		Due	04/11/2009
Originator	^PER Coordinator	Priority	Medium
Originator Phone		Category	PER
Origination Date	04/09/2009 1035	Generic1	None
Remote Task#		Generic2	None
Deliverable	PER Review	Generic3	None
Class	None	View Permissions	Global
Instructions	*No Instructions*		
ROUTING LISTS			
1	Review Initial PER		Inactive
	Review New PER		
	• ^SO(Wallgren, Carl B) - Review - Concur - 04/09/2009 1058 *Instructions:*		
	• ^PER Screening(Brown, Nancy L) - Review - Concur - 04/10/2009 1210 *Instructions:*		
	• ^Mgr Review(Brown, Nancy L) - Review - Concur - 04/13/2009 1038 *Instructions:*		
ATTACHMENTS			
Attachments	1. Link to PER		
COMMENTS			
No Comments			
TASK DUE DATE HISTORY			
Modified	04/09/2009 1035 - ^PER Coordinator	New Due Date	04/11/2009 1630
SUB TASK HISTORY			

Task# WRPS-PER-2009-0605
No Subtasks
-- end of report --

Save

Problem Evaluation Request (PER)

WRPS-PER-2009-0606
Closed 04/13/2009 13:30

PER No	Date of Discovery	Time of Discovery (24:00)	Project
WRPS-PER-2009-0606	03/15/2009	00:00	Safety/IH-RC

Location

C Farm

How Was Problem Discovered

Routine Work

Description of Concern or Problem

TREND ONLY - NO ACTION REQUIRED. This PER is written for automated PAAA/WSH trending purposes only. March 2009 First Aid Case. Assign to Craig Anderson, PAAA/WSH.

200E/C-Farm – SsT Retrieval & Closure: Safety/IH – FIRST AID – Employee was lifting cattle guards in farm and felt pop in lower back. Employee was treated at AMH and returned to work with no restrictions.

Requirement Not Satisfied	Source Document Number
None	

Equipment Identification Number	System Identification

Immediate actions Taken or Planned

Employee was treated at AMH and returned to work with no restrictions.

Recommended Corrective actions

Originator Contact

No

Originators Name	Originators ID	Originators Phone	Date Initiated
Anderson, Craig E	H0001274	(509) 372-3940	04/09/2009

SHIFT OPERATIONS REVIEW

Title

PAAA/WSH trending purposes only. March 2009 First Aid Case

How Discovered	Agency
self-ID prior to event	

Reportability	SSC Operability	Operability Review	Comp Measures Req
Non-Reportable	N/A	N/A	

Describe actions Taken or Recommended

No immediate BO SO actions identified.

SO Reviewer Name	SO Reviewer ID	SO Reviewer Phone	SO Review Date
Wallgren, Carl B	H0099480	(509) 373-2689	04/09/2009

SCREENING

PER Significance Level	
Trend Only	

Independent Assessment Review	Occurrence Report Number	Externally Identified	
No		No	

Assigned Responsible Manager	Facilities Rep / SSO	Safety Management Rep	
Anderson, Craig E			

Program	Safety Management Program
• N/A	• Safety & Health

PER Screening Comments			
No comments. (Nancy Brown 04/10/09)			
Causal Code			
MGT/Comm/Train	**Human Performance**	**GEMS**	**Equip/Eng/Other**
Failed Barrier	**ORPS Code**	**Functional Area**	**Work Process**
	Not Applicable	Occupational Safety and Health	• Other
ISMS	**Consequence Code**		
Identify and analyze hazards	• Injury/Other - Minor injuries or illnesses, first aid items - not captured in other consequence categories		
PER Screening Chair	**PER Screening Chair ID**	**PER Screening Chair Phone**	**PER Screening Date**
Brown, Nancy L	H0088797	(509) 373-0992	04/10/2009
PAAA REVIEW			
PAAA Screening	**PAAA Codes**	**Function Codes**	
Not subject to PAAA			
NTS Report Number	**NTS Report Date**		
Repetitive / Recurrent	**Programmatic**	**Intentional Violation / Misrepresentation**	
No	No	No	
PAAA Screening Comments			
PAAA Reviewer Name	**PAAA Review Date**		
Anderson, Craig E	04/10/2009		
PAAA Approver Name	**PAAA Approve Date**		
Anderson, Craig E	04/10/2009		
SENIOR MANAGEMENT REVIEW/CONCURRENCE			
TF Operations Morning Leadership Call			
N/A			
Instructions for Responsible Manager			
Senior Management	**Sr Mgmt ID**	**Sr Mgmt Phone**	**Sr Mgmt Review Date**
Brown, Nancy L	H0088797	(509) 373-0992	04/13/2009
ATTACHMENTS			
Link to PER			
AUDIT HISTORY			
Change Date	**Auditor**	**Comments**	
04/10/2009 14:21	Brown, Nancy L	'PER Significance Level' was changed	

-- End of Report --
04/13/2009 01:45 PM

Task# WRPS-PER-2009-0606

E-STARS[R] Report
Task Detail Report
04/13/2009 0145

TASK INFORMATION			
Task#	WRPS-PER-2009-0606		
Subject	TREND; PAAA/WSH trending purposes only. March 2009 First Aid Case		
Parent Task#		Status	CLOSED 04/13/2009
Reference		Due	04/11/2009
Originator	^PER Coordinator	Priority	Medium
Originator Phone		Category	PER
Origination Date	04/09/2009 1038	Generic1	None
Remote Task#		Generic2	None
Deliverable	PER Review	Generic3	None
Class	None	View Permissions	Global
Instructions	*No Instructions*		

ROUTING LISTS		
1	Review Initial PER	Inactive
	Review New PER	
	• ^SO(Wallgren, Carl B) - Review - Concur - 04/09/2009 1058 *Instructions:*	
	• ^PER Screening(Brown, Nancy L) - Review - Concur - 04/10/2009 1212 *Instructions:*	
	• ^Mgr Review(Brown, Nancy L) - Review - Concur - 04/13/2009 1038 *Instructions:*	

ATTACHMENTS	
Attachments	1. Link to PER

COMMENTS

No Comments

TASK DUE DATE HISTORY			
Modified	04/09/2009 1038 - ^PER Coordinator	New Due Date	04/11/2009 1630

SUB TASK HISTORY

No Subtasks

-- end of report --

Save

Problem Evaluation Request (PER)

WRPS-PER-2009-0607
Closed 04/13/2009 13:30

PER No	Date of Discovery	Time of Discovery (24:00)	Project
WRPS-PER-2009-0607	03/11/2009	00:00	Base Ops

Location

242A

How Was Problem Discovered

Routine Work

Description of Concern or Problem

TREND ONLY - NO ACTION REQUIRED. This PER is written for automated PAAA/WSH trending purposes only. March 2009 First Aid Case. Assign to Craig Anderson, PAAA/WSH.

BASE OPS: Shift Operations, Shift Office – FIRST AID – Employee scratched back of hand while descending steps. Employee elected to self treat with management concurrence.

Requirement Not Satisfied	Source Document Number
None	
Equipment Identification Number	**System Identification**

Immediate actions Taken or Planned

Employee elected to self treat with management concurrence.

Recommended Corrective actions

Originator Contact

No

Originators Name	Originators ID	Originators Phone	Date Initiated
Anderson, Craig E	H0001274	(509) 372-3940	04/09/2009

SHIFT OPERATIONS REVIEW

Title

PAAA/WSH trending purposes only. March 2009 First Aid Case.

How Discovered	Agency
self-ID prior to event	

Reportability	SSC Operability	Operability Review	Comp Measures Req
Non-Reportable	N/A	N/A	

Describe actions Taken or Recommended

No immediate BO SO actions identified.

SO Reviewer Name	SO Reviewer ID	SO Reviewer Phone	SO Review Date
Wallgren, Carl B	H0099480	(509) 373-2689	04/09/2009

SCREENING

PER Significance Level	
Trend Only	

Independent Assessment Review	Occurrence Report Number	Externally Identified	
No		No	
Assigned Responsible Manager	**Facilities Rep / SSO**	**Safety Management Rep**	
Anderson, Craig E			

Program	Safety Management Program
• N/A	• Safety & Health

PER Screening Comments			
No comments. (Nancy Brown 04/10/09)			
Causal Code			
MGT/Comm/Train	**Human Performance**	**GEMS**	**Equip/Eng/Other**
Failed Barrier	**ORPS Code**	**Functional Area**	**Work Process**
	Not Applicable	Occupational Safety and Health	• Office Safety • Walking and Working Surfaces
ISMS	**Consequence Code**		
Identify and analyze hazards	• Injury/Other - Minor injuries or illnesses, first aid items - not captured in other consequence categories		
PER Screening Chair	**PER Screening Chair ID**	**PER Screening Chair Phone**	**PER Screening Date**
Brown, Nancy L	H0088797	(509) 373-0992	04/10/2009
PAAA REVIEW			
PAAA Screening	**PAAA Codes**	**Function Codes**	
Not subject to PAAA			
NTS Report Number	**NTS Report Date**		
Repetitive / Recurrent	**Programmatic**	**Intentional Violation / Misrepresentation**	
No	No	No	
PAAA Screening Comments			
PAAA Reviewer Name	**PAAA Review Date**		
Anderson, Craig E	04/10/2009		
PAAA Approver Name	**PAAA Approve Date**		
Anderson, Craig E	04/10/2009		
SENIOR MANAGEMENT REVIEW/CONCURRENCE			
TF Operations Morning Leadership Call			
N/A			
Instructions for Responsible Manager			
Senior Management	**Sr Mgmt ID**	**Sr Mgmt Phone**	**Sr Mgmt Review Date**
Brown, Nancy L	H0088797	(509) 373-0992	04/13/2009
ATTACHMENTS			
Link to PER			

-- End of Report --
04/13/2009 01:45 PM

Task# WRPS-PER-2009-0607

E-STARS[R] Report
Task Detail Report
04/13/2009 0145

TASK INFORMATION			
Task#	WRPS-PER-2009-0607		
Subject	TREND; PAAA/WSH trending purposes only. March 2009 First Aid Case		
Parent Task#		Status	CLOSED 04/13/2009
Reference		Due	04/11/2009
Originator	^PER Coordinator	Priority	Medium
Originator Phone		Category	PER
Origination Date	04/09/2009 1042	Generic1	None
Remote Task#		Generic2	None
Deliverable	PER Review	Generic3	None
Class	None	View Permissions	Global
Instructions	*No Instructions*		

ROUTING LISTS		
1	Review Initial PER	Inactive
	Review New PER	
	• ^SO(Wallgren, Carl B) - Review - Concur - 04/09/2009 1059 *Instructions:*	
	• ^PER Screening(Brown, Nancy L) - Review - Concur - 04/10/2009 1214 *Instructions:*	
	• ^Mgr Review(Brown, Nancy L) - Review - Concur - 04/13/2009 1039 *Instructions:*	

ATTACHMENTS	
Attachments	1. Link to PER

COMMENTS

No Comments

TASK DUE DATE HISTORY			
Modified	04/09/2009 1042 - ^PER Coordinator	New Due Date	04/11/2009 1630

SUB TASK HISTORY

No Subtasks

-- end of report --

Save

Problem Evaluation Request (PER)

WRPS-PER-2009-0608
In Process/Work

PER No	Date of Discovery	Time of Discovery (24:00)	Project
WRPS-PER-2009-0608	04/09/2009	10:00	Base Ops

Location

OTHER

How Was Problem Discovered

DOE FAC REP

Description of Concern or Problem

A review of the DRAFT ORP Facility Representative's monthly report for March 2009 indicated the following weakness:

FINDING: S-09-AMTF-TANKFARM-003-F03; The Decontamination Unit and Safety Shower Trailers (DUSSTs) Contained an Unapproved Operator Aid. (Joe Sondag - March 12, 2009)

Requirement:
DOE O 5480.19, Chapter XVII, Operator Aid Postings, Section C.1. , states in part, "Any facility employee could develop an operator aid; however, it should be approved prior to posting;" and Section C.2 states in part, "The operations supervisor, or a higher authority, should approve all operator aids."

Discussion:
Two unapproved postings were identified: 1) a laminated copy of Page 54 from Procedure TO-020-021, "Setup and Operate Decontamination Unit and Safety Shower Trailer" was posted in a holder near wall heater #1 in the 242-S Evaporator DUSST; and 2) a personnel decontamination decision flow chart was posted near the eyewash station/sink (near the entrance) in the 702-AZ DUSST. There were no document identifiers on this sheet. Both postings were not approved or identified as an approved posting in the Base Operations Operator Aid Index.

A review of the PER database indicated that this specific issue had not been previously identified.

Requirement Not Satisfied	Source Document Number

Equipment Identification Number	System Identification

Immediate actions Taken or Planned

Wrote this PER.

Recommended Corrective actions

Resolve to ORP's satisfaction.

Originator Contact

No

Originators Name	Originators ID	Originators Phone	Date Initiated
Hanson, Gregory N	H0078707	(509) 376-2182	04/09/2009

SHIFT OPERATIONS REVIEW

Title

Postings within the Decontamination Unit and Safety Shower Trailers

How Discovered	Agency
FACREP Surveillance	

Reportability	SSC Operability	Operability Review	Comp Measures Req
Non-Reportable	N/A	N/A	

Describe actions Taken or Recommended

The posting at 242-S Decon trailer is not an operator aid, it is an actual copy of an approved document, TO-020-021. No further reviews or approvals needed per TFC-OPS-OPER-C-41. The posting at the 702AZ Decon trailer was verified removed.

SO Reviewer Name	SO Reviewer ID	SO Reviewer Phone	SO Review Date
Higham, Dale B	H0078950	(509) 373-2689	04/10/2009

SCREENING			
PER Significance Level			
PER with Resolution			
Independent Assessment Review	**Occurrence Report Number**	**Externally Identified**	
Yes		Yes	
Assigned Responsible Manager	**Facilities Rep / SSO**	**Safety Management Rep**	
Reynolds, Tammy R	Sondag, Joseph M	Owen, Peter	
Program		**Safety Management Program**	
• N/A		• Conduct of Operations	
PER Screening Comments			
PER w/ Res with informal Apparent Cause Analysis (Nancy Brown 04/10/09)			
Causal Code			
A3B1C03	Human Performance LTA Skill Based Error Incorrect performance due to mental lapse		
A4B1C01	Management Problem Management Methods LTA Management policy guidance/expectations not well-defined, understood or enforced		
MGT/Comm/Train	**Human Performance**	**GEMS**	**Equip/Eng/Other**
Failed Barrier	**ORPS Code**	**Functional Area**	**Work Process**
	Not Applicable	Operations	• Operator Aids
ISMS	**Consequence Code**		
Identify and analyze hazards	• Procedure - Operational - Procedure ambiguous, in error, could not be worked, was not used		
PER Screening Chair	**PER Screening Chair ID**	**PER Screening Chair Phone**	**PER Screening Date**
Brown, Nancy L	H0088797	(509) 373-0992	04/10/2009
PAAA REVIEW			
PAAA Screening	**PAAA Codes**	**Function Codes**	
PAAA, Non-NTS Reportable	• 10 CFR 830.122 (e)(1)	• Conduct of Operations (including Drills and Exercises)	
NTS Report Number	**NTS Report Date**		
Repetitive / Recurrent	**Programmatic**	**Intentional Violation / Misrepresentation**	
No	No	No	
PAAA Screening Comments			
PAAA Reviewer Name	**PAAA Review Date**		
Anderson, Craig E	04/10/2009		
PAAA Approver Name	**PAAA Approve Date**		
Anderson, Craig E	04/10/2009		
SENIOR MANAGEMENT REVIEW/CONCURRENCE			
TF Operations Morning Leadership Call			
N/A			
Instructions for Responsible Manager			

Review the PER Screening Tab and Senior Manager Review for requested data. Complete the task in E-STARS in accordance with TFC-ESHQ-Q_C-C-01, and TFC-ESHQ-Q_ADM-C-12 Apparent Cause Analysis & Corrective Action Planning.

Senior Management	Sr Mgmt ID	Sr Mgmt Phone	Sr Mgmt Review Date
Brown, Nancy L	H0088797	(509) 373-0992	04/13/2009

CAUSE ANALYSIS

Description of Occurrence

The Decontamination Unit and Safety Shower Trailers (DUSSTs) Contained an Unapproved Operator Aid.

Two unapproved postings were identified: 1) a laminated copy of Page 54 from Procedure TO-020-021, "Setup and Operate Decontamination Unit and Safety Shower Trailer" was posted in a holder near wall heater #1 in the 242-S Evaporator DUSST; and 2) a personnel decontamination decision flow chart was posted near the eyewash station/sink (near the entrance) in the 702-AZ DUSST. There were no document identifiers on this sheet. Both postings were not approved or identified as an approved posting in the Base Operations Operator Aid Index.

Extent of Condition

A review of the Decon Trailers revealed that there were two additional unapproved operator aids. Each decon trailer had portions of the diesel operating procedure inside the diesel enclosures. No other unapproved operator aids were found in Tank Farm facilities.

Safety Significance

The use of unapproved operator aids could have a significant impact on personnel safety if the aid is not validated prior to installation.

Generic Implications

Remedial Corrective Action

The four unapproved operator aids were removed from the decon trailers as soon as they were identified to the Shift Office on 3/12/09.

A review of Tank Farm facilities for unapproved operator aids was completed on 3/19/09. No additional unapproved operator aids were discovered.

Causal Analysis, Apparent Cause and/or Root Cause Analysis

The apparent causes of this issue are:

A3B1C03: Human Performance LTA - Skill Based Error - Incorrect performance due to mental lapse

The persons that developed the operator aids are not normally involved in this process. Operator aids are normally developed by Operations personnel. The people that developed these aids failed to check to see if there was a procedure governing this process.

A4B1C01: Management Problem - Management Methods LTA - Management policy guidance/expectations not well-defined, understood or enforced

While Tank Farms Shift Operations management performs regular audits of approved, installed operator aids, they failed to recognize that there were unapproved operator aids installed as well. During the performance of these audits, the Shift Managers should have instructed their personnel to verify that all installed operator aids are approved.

CORRECTIVE ACTIONS

Actionee	Action Due Date	E-STARS Number
Garrett, Mark S	06/24/2009	

Action

Prepare and issue a Tailgate slide reminding personnel of requirements for developing and installing operator aids. Attach a copy of the issued Tailgate presentation.

Corrective Action Attachments

ATTACHMENTS

Link to PER

AUDIT HISTORY		
Change Date	**Auditor**	**Comments**
04/13/2009 10:39	Brown, Nancy L	Responsible Manager Task Launched by Brown, Nancy L
05/26/2009 10:59	Mata, Beth L	Change to Cause Analysis screen/Corrective Action plan.

-- End of Report --
07/09/2009 12:48 PM

Task# WRPS-PER-2009-0608

E-STARS[R] Report
Task Detail Report
07/09/2009 1249

TASK INFORMATION			
Task#	WRPS-PER-2009-0608		
Subject	RES; Postings within the Decontamination Unit and Safety Shower Trailers		
Parent Task#		**Status**	Open
Reference		**Due**	06/01/2009
Originator	^PER Coordinator	**Priority**	Medium
Originator Phone		**Category**	PER
Origination Date	04/09/2009 1042	**Generic1**	None
Remote Task#		**Generic2**	None
Deliverable	PER Review	**Generic3**	None
Class	None	**View Permissions**	Global
Instructions	*No Instructions*		

ROUTING LISTS

1	Responsible Manager	Active
	Review the PER Screening Tab and Senior Manager Review for requested data. Complete the task in E-STARS in accordance with TFC-ESHQ-Q_C-C-01, and TFC-ESHQ-Q_ADM-C-12 Apparent Cause Analysis & Corrective Action Planning.	
	• Owen, Peter - Assign - Completed with comments - 05/19/2009 1037 *Instructions:*	
	• ^Independent Assessment Review(Penick, Lee R) - Review - Concur - 05/26/2009 1615 *Instructions:* Independent Assessor Review	
	• Reynolds, Tammy R - Review - Concur - 06/26/2009 1804 *Instructions:*	
	• Owen, Peter - Review - Reassigned - 05/20/2009 1135 *Instructions:* Safety Management Representative Review	
2	Review Initial PER	Inactive
	Review New PER	
	• ^SO(Higham, Dale B) - Review - Concur - 04/10/2009 0340 *Instructions:*	
	• ^PER Screening(Brown, Nancy L) - Review - Concur - 04/10/2009 1425 *Instructions:*	
	• ^Mgr Review - Review - Cancelled - 04/13/2009 1039 *Instructions:*	

ATTACHMENTS

Attachments	1. Link to PER

COMMENTS

Poster	Owen, Peter - 05/19/2009 1037
	Owen, Pete -- Completed
	Apparent Cause Analysis complete and corrective actions identified and ready to be launched. This activity is complete.

Task# WRPS-PER-2009-0608

	Pete Owen Manager, Shift Operations		
TASK DUE DATE HISTORY			
Modified	04/13/2009 1039 - ^PER Coordinator	**New Due Date**	05/24/2009 1630
Modified	04/13/2009 1039 - ^PER Coordinator	**New Due Date**	06/01/2009 1630
Modified	04/09/2009 1042 - ^PER Coordinator	**New Due Date**	04/11/2009 1630
SUB TASK HISTORY			
No Subtasks			

-- end of report --

Save

Problem Evaluation Request (PER)

WRPS-PER-2009-0609
Closed 04/13/2009 13:30

PER No	Date of Discovery	Time of Discovery (24:00)	Project
WRPS-PER-2009-0609	03/09/2009	00:00	Q A

Location

OTHER

How Was Problem Discovered

Routine Work

Description of Concern or Problem

TREND ONLY - NO ACTION REQUIRED. This PER is written for automated PAAA/WSH trending purposes only. March 2009 First Aid Case. Assign to Craig Anderson, PAAA/WSH.

200E/MO850 – SAFETY/QA: ESH&Q, Safety, Health & QA – FIRST AID – Employee was walking down steps and felt pop behind left knee. Employee was treated at AMH and returned to work with no restrictions.

Requirement Not Satisfied	Source Document Number
None	

Equipment Identification Number	System Identification

Immediate actions Taken or Planned

Employee was treated at AMH and returned to work with no restrictions.

Recommended Corrective actions

Originator Contact

No

Originators Name	Originators ID	Originators Phone	Date Initiated
Anderson, Craig E	H0001274	(509) 372-3940	04/09/2009

SHIFT OPERATIONS REVIEW

Title

PAAA/WSH trending purposes only. March 2009 First Aid Case.

How Discovered	Agency
self-ID prior to event	

Reportability	SSC Operability	Operability Review	Comp Measures Req
Non-Reportable	N/A	N/A	

Describe actions Taken or Recommended

No immediate BO SO actions identified.

SO Reviewer Name	SO Reviewer ID	SO Reviewer Phone	SO Review Date
Wallgren, Carl B	H0099480	(509) 373-2689	04/09/2009

SCREENING

PER Significance Level	
Trend Only	

Independent Assessment Review	Occurrence Report Number	Externally Identified	
No		No	

Assigned Responsible Manager	Facilities Rep / SSO	Safety Management Rep	
Anderson, Craig E			

Program	Safety Management Program
• N/A	• Safety & Health

PER Screening Comments			
No comments. (Nancy Brown 04/10/09)			
Causal Code			
MGT/Comm/Train	**Human Performance**	**GEMS**	**Equip/Eng/Other**
Failed Barrier	**ORPS Code**	**Functional Area**	**Work Process**
	Not Applicable	Occupational Safety and Health	• Walking and Working Surfaces
ISMS	**Consequence Code**		
Identify and analyze hazards	• Injury/Other - Minor injuries or illnesses, first aid items - not captured in other consequence categories • Slips, Trips, Falls - Slips, Trips, Falls that may/or may not have resulted in Injury		
PER Screening Chair	**PER Screening Chair ID**	**PER Screening Chair Phone**	**PER Screening Date**
Brown, Nancy L	H0088797	(509) 373-0992	04/10/2009
PAAA REVIEW			
PAAA Screening	**PAAA Codes**	**Function Codes**	
Not subject to PAAA			
NTS Report Number	**NTS Report Date**		
Repetitive / Recurrent	**Programmatic**	**Intentional Violation / Misrepresentation**	
No	No	No	
PAAA Screening Comments			
PAAA Reviewer Name	**PAAA Review Date**		
Anderson, Craig E	04/10/2009		
PAAA Approver Name	**PAAA Approve Date**		
Anderson, Craig E	04/10/2009		
SENIOR MANAGEMENT REVIEW/CONCURRENCE			
TF Operations Morning Leadership Call			
N/A			
Instructions for Responsible Manager			
Senior Management	**Sr Mgmt ID**	**Sr Mgmt Phone**	**Sr Mgmt Review Date**
Brown, Nancy L	H0088797	(509) 373-0992	04/13/2009
ATTACHMENTS			
Link to PER			

-- End of Report --
04/13/2009 01:45 PM

Task# WRPS-PER-2009-0609

E-STARS[R] Report
Task Detail Report
04/13/2009 0145

TASK INFORMATION

Task#	WRPS-PER-2009-0609		
Subject	TREND; PAAA/WSH trending purposes only. March 2009 First Aid Case		
Parent Task#		Status	CLOSED 04/13/2009
Reference		Due	04/11/2009
Originator	^PER Coordinator	Priority	Medium
Originator Phone		Category	PER
Origination Date	04/09/2009 1044	Generic1	None
Remote Task#		Generic2	None
Deliverable	PER Review	Generic3	None
Class	None	View Permissions	Global
Instructions	*No Instructions*		

ROUTING LISTS

1	Review Initial PER	Inactive
	Review New PER	
	• ^SO(Wallgren, Carl B) - Review - Concur - 04/09/2009 1251 *Instructions:*	
	• ^PER Screening(Brown, Nancy L) - Review - Concur - 04/10/2009 1223 *Instructions:*	
	• ^Mgr Review(Brown, Nancy L) - Review - Concur - 04/13/2009 1040 *Instructions:*	

ATTACHMENTS

Attachments	1. Link to PER

COMMENTS

No Comments

TASK DUE DATE HISTORY

Modified	04/09/2009 1045 - ^PER Coordinator	New Due Date	04/11/2009 1630

SUB TASK HISTORY

No Subtasks

-- end of report --

Save

Problem Evaluation Request (PER)

WRPS-PER-2009-0610
Closed 04/13/2009 13:30

PER No	Date of Discovery	Time of Discovery (24:00)	Project
WRPS-PER-2009-0610	03/18/2009	00:00	Base Ops

Location

BX Farm

How Was Problem Discovered

Routine Work

Description of Concern or Problem

TREND ONLY - NO ACTION REQUIRED. This PER is written for automated PAAA/WSH trending purposes only. March 2009 Recordable/LWD Case. Assign to Craig Anderson, PAAA/WSH.

200E/241-BX – BASE OPS: Maintenance/Work Execution, West Day Operations – RECORDABLE WITH LOST WORKDAY – During tumbleweed removal in farm employee strained back. Due to ongoing medical treatment, case re-classified to Recordable With Lost Workday.

Requirement Not Satisfied	Source Document Number
None	

Equipment Identification Number	System Identification

Immediate actions Taken or Planned

Medical treatment.

Recommended Corrective actions

Originator Contact

No

Originators Name	Originators ID	Originators Phone	Date Initiated
Anderson, Craig E	H0001274	(509) 372-3940	04/09/2009

SHIFT OPERATIONS REVIEW

Title

PAAA/WSH trending purposes only. March 2009 Recordable/LWD Case.

How Discovered	Agency
self-ID prior to event	

Reportability	SSC Operability	Operability Review	Comp Measures Req
Non-Reportable	N/A	N/A	

Describe actions Taken or Recommended

No immediate BO SO actions identified.

SO Reviewer Name	SO Reviewer ID	SO Reviewer Phone	SO Review Date
Wallgren, Carl B	H0099480	(509) 373-2689	04/09/2009

SCREENING

PER Significance Level	
Trend Only	

Independent Assessment Review	Occurrence Report Number	Externally Identified	
No		No	

Assigned Responsible Manager	Facilities Rep / SSO	Safety Management Rep	
Anderson, Craig E			

Program	Safety Management Program
• N/A	• Safety & Health

PER Screening Comments			
No comments. (Nancy Brown 04/10/09)			
Causal Code			
MGT/Comm/Train	**Human Performance**	**GEMS**	**Equip/Eng/Other**
Failed Barrier	**ORPS Code**	**Functional Area**	**Work Process**
	Not Applicable	Occupational Safety and Health	• Other
ISMS	**Consequence Code**		
Identify and analyze hazards	• Injury/Other - Minor injuries or illnesses, first aid items - not captured in other consequence categories		
PER Screening Chair	**PER Screening Chair ID**	**PER Screening Chair Phone**	**PER Screening Date**
Brown, Nancy L	H0088797	(509) 373-0992	04/10/2009
PAAA REVIEW			
PAAA Screening	**PAAA Codes**	**Function Codes**	
Not subject to PAAA			
NTS Report Number	**NTS Report Date**		
Repetitive / Recurrent	**Programmatic**	**Intentional Violation / Misrepresentation**	
No	No	No	
PAAA Screening Comments			
PAAA Reviewer Name	**PAAA Review Date**		
Anderson, Craig E	04/10/2009		
PAAA Approver Name	**PAAA Approve Date**		
Anderson, Craig E	04/10/2009		
SENIOR MANAGEMENT REVIEW/CONCURRENCE			
TF Operations Morning Leadership Call			
N/A			
Instructions for Responsible Manager			
Senior Management	**Sr Mgmt ID**	**Sr Mgmt Phone**	**Sr Mgmt Review Date**
Brown, Nancy L	H0088797	(509) 373-0992	04/13/2009
ATTACHMENTS			
Link to PER			

-- End of Report --
04/13/2009 01:45 PM

Task# WRPS-PER-2009-0610

E-STARS[R] Report
Task Detail Report
04/13/2009 0145

TASK INFORMATION

Task#	WRPS-PER-2009-0610		
Subject	TREND; PAAA/WSH trending purposes only. March 2009 Recordable/LWD Case.		
Parent Task#		Status	CLOSED 04/13/2009
Reference		Due	04/11/2009
Originator	^PER Coordinator	Priority	Medium
Originator Phone		Category	PER
Origination Date	04/09/2009 1047	Generic1	None
Remote Task#		Generic2	None
Deliverable	PER Review	Generic3	None
Class	None	View Permissions	Global
Instructions	*No Instructions*		

ROUTING LISTS

1	Review Initial PER	Inactive
	Review New PER	
	• ^SO(Wallgren, Carl B) - Review - Concur - 04/09/2009 1252 *Instructions:*	
	• ^PER Screening(Brown, Nancy L) - Review - Concur - 04/10/2009 1224 *Instructions:*	
	• ^Mgr Review(Brown, Nancy L) - Review - Concur - 04/13/2009 1041 *Instructions:*	

ATTACHMENTS

Attachments	1. Link to PER

COMMENTS

No Comments

TASK DUE DATE HISTORY

Modified	04/09/2009 1047 - ^PER Coordinator	New Due Date	04/11/2009 1630

SUB TASK HISTORY

No Subtasks

-- end of report --

Save

Problem Evaluation Request (PER)

WRPS-PER-2009-0617
In Process/Work

PER No	Date of Discovery	Time of Discovery (24:00)	Project
WRPS-PER-2009-0617	04/09/2009	11:00	Modeling & Planning

Location

2750E

How Was Problem Discovered

DNFSB

Description of Concern or Problem

The safety software category for the TWINS database was discussed in response to a question by DNFSB Site Representative. The current designation as Level C (DOE G 414.1-4) was based on answering questions in the Software Quality and Safety Checklist in the Hanford Information System Inventory (HISI). The software is managed as safety software under PNNL's Software QA Program and is designated Level B. The DNFSB Site Representative believes that TWINS should be classified as Level A as defined in the DOE G 414.1-4. The application of the graded approach to the software quality assurance requirements shall be defined.

Requirement Not Satisfied	Source Document Number

Equipment Identification Number	System Identification
N/A	

Immediate actions Taken or Planned

Discussed the issue with PNNL and WRPS Tank Farm Inventory, Nuclear Safety, and Central Design Authority & Standards organizations.

Recommended Corrective actions

I recommend to assign this PER to Jacob Reynolds as "Further Evaluation": evaluate the designation of TWINS based on the definitionin in DOE G 414.1-4 and determine the path forward to address DNFSB question.
cc: Paul Rutland, Larry Eppler, Randy Stickney, David Banning, David Shugars

Originator Contact

I would like to help define the problem

Originators Name	Originators ID	Originators Phone	Date Initiated
Maciuca, Tino	H0020930	(509) 373-6334	04/09/2009

SHIFT OPERATIONS REVIEW

Title

DNFSB Site Representative believes that TWINS should be classified as Level A as defined in the DOE G 414.1-4.

How Discovered	Agency
Externally Identified	DNFSB

Reportability	SSC Operability	Operability Review	Comp Measures Req
Non-Reportable	N/A	N/A	

Describe actions Taken or Recommended

No immediate actions identified.

SO Reviewer Name	SO Reviewer ID	SO Reviewer Phone	SO Review Date
Wallgren, Carl B	H0099480	(509) 373-2689	04/09/2009

SCREENING

PER Significance Level	
PER with Resolution	

Independent Assessment Review	Occurrence Report Number	Externally Identified	
Yes		Yes	

Assigned Responsible Manager	Facilities Rep / SSO	Safety Management Rep	
Reynolds, Jacob G		Shugars, David L	

Program	Safety Management Program
• N/A	• Quality Assurance

PER Screening Comments

FURTHER EVALUATION: Evaluate the designation of TWINS based on the definition in DOE G 414.1-4 and determine the path forward to address DNFSB question.
cc: Paul Rutland, Larry Eppler, Randy Stickney, David Banning, David Shugars
(Nancy Brown 04/10/09)

RESCREEN REQUEST (FUR): Posted By: Reynolds, Jacob G 05/04/2009 1048

TWINS was originally graded as Safety Class B (PNNL) or C (TOC) because the calculations in TWINS are not directly used in facility safety class determination without user review. TWINS is a database, and its primary function is to store and present data, not to perform calculations. TWINS also predates the DOE order that implements the software safety class, so is exempt from the DOE order as legacy software. Nonetheless, TWINS does perform Unit Liter Does (ULD) and Toxicological Sum-of-Fractions (SOF) calculations, which in turn are compared to values accepted in the DSA and used in new safety evaluations. A conservative approach would be to designate the ULD and SOF calculations as Safety Class A software and apply this QA level to any new TWINS upgrades. The cost of revising the TWINS QA documentation to reflect Safety Class A is prohibitive. The SOF and ULD calculations on TWINS are a very small portion of TWINS, and could be easily removed. Therefore, the most cost effective strategy is to remove the ULD and SOF calculations from the TWINS database and maintain them separately. This is the recommendation of this evaluation. The safety class of TWINS without the SOF and ULD calculations will be determined and the appropriate software QA safety class will be applied.

RE-SCREENING COMMENTS: Change from F/E to PIE/CIM assigned to Jacob Reynolds.
cc: Joe Vacca
(Nancy Brown 05/05/09)

RE-SCREEN REQUEST (Decline) -- Reynolds, Jacob G - 06/04/2009
Management has requested that this PER be rescreened as a PER with resolution. Therefore, I am declining this action so that it can be rescreened.

RE-SCREENING COMMENTS: Change from PIE/CIM to PER w/ Res with Formal Apparent Cause Analysis based on the re-evaluation of the requirements by senior management.
(Nancy Brown 06/05/09)

Causal Code

A3B2C05	Human Performance LTA Rule Based Error Situation incorrectly identified or represented resulting in wrong rule used

MGT/Comm/Train	Human Performance	GEMS	Equip/Eng/Other

Failed Barrier	ORPS Code	Functional Area	Work Process
	Not Applicable	Information Resources Management	• Requirements Management

ISMS	Consequence Code	
Perform work within the controls	• Computer Software - Inadequacies and issues with network, desktop, database, and other computer software applications • Quality Requirement - Failure to meet QA requirements, of LTA implementation of QAPP (Customer Defined)	

PER Screening Chair	PER Screening Chair ID	PER Screening Chair Phone	PER Screening Date
Brown, Nancy L	H0088797	(509) 373-0992	04/10/2009

PAAA REVIEW

PAAA Screening	PAAA Codes	Function Codes	
Not subject to PAAA			

NTS Report Number	NTS Report Date	

Repetitive / Recurrent	**Programmatic**	**Intentional Violation / Misrepresentation**	
No	No	No	

PAAA Screening Comments

PAAA Reviewer Name	**PAAA Review Date**	
Anderson, Craig E	04/10/2009	
PAAA Approver Name	**PAAA Approve Date**	
Anderson, Craig E	04/10/2009	

SENIOR MANAGEMENT REVIEW/CONCURRENCE

TF Operations Morning Leadership Call

N/A

Instructions for Responsible Manager

Review the PER Screening Tab and Senior Manager Review for requested data. Complete the task in E-STARS in accordance with TFC-ESHQ-Q_C-C-01, and TFC-ESHQ-Q_ADM-C-12 Apparent Cause Analysis & Corrective Action Planning.

Senior Management	**Sr Mgmt ID**	**Sr Mgmt Phone**	**Sr Mgmt Review Date**
Brown, Nancy L	H0088797	(509) 373-0992	06/08/2009

CAUSE ANALYSIS

Description of Occurrence

The TWINs database was being managed as safety Level B software when there was safety level A software on it. This was done because we did not properly inform the subcontractor (PNNL), who was responsible for the TWINS Software Quality assurance, all of the applications of the software.

Extent of Condition

The DNFSB initially identified the Unit Liter Dose calculations and the Best-Basis Inventory (BBI) Calculations as Level A Software. Other software on TWINs might also have been software that should have been managed as Level A, so this was investigated. Subsequent analysis indicated that the BBI software was not Level A software. Management decided that the Toxicological Sum of Fractions calculations should also be managed as Level A software. Other software on TWINS was found to not be Level A software.

Safety Significance

The safety significance is low. The reason low safety significance was assigned was because TWINS was already managed as safety software, so all of the calculations had been checked and validated. Similarly, the calculation results are used conservatively by the Nuclear Safety Organization, sufficiently conservative that an error in the calculation could not result in an inaccurate accident scenario. Indeed, this is why we had originally assumed that the software should be managed as Level B rather than Level A.

Generic Implications

Remedial Corrective Action

The rest of the software on TWINS was evaluated to make sure that there was no other software besides the Unit Liter Dose and Toxicological Sum of Fractions calculations that should be managed as Level A.

Causal Analysis, Apparent Cause and/or Root Cause Analysis

The cause was that we did not properly inform the subcontractor (PNNL), who was responsible for the TWINS Software Quality assurance, all of the uses of the software calcualtions. We did not inform them because our own analysis indicated that this was not level A software. Thus, we had not provided PNNL sufficient information to come to a different conclusion than the one we had because we had believed that PNNL had come to the correct software grading based on the information that they had.

CORRECTIVE ACTIONS

Actionee	**Action Due Date**	**E-STARS Number**
Reynolds, Jacob G	07/21/2009	

Action

The Unit Liter Dose and Toxicological Sum of Fractions calculations will be performed in a spreadsheet rather than the TWINS database going forward. The issuance of these spreadsheets as Level a software will close this action. The Safety level of the TWINS database will be re-graded in the HISI system.

Corrective Action Attachments

ATTACHMENTS		
Link to PER		
AUDIT HISTORY		
Change Date	**Auditor**	**Comments**
04/13/2009 11:02	Brown, Nancy L	Responsible Manager Task Launched by Brown, Nancy L
05/04/2009 15:54	Glaman, Linda R	'PER Screening Comments' was changed.
05/05/2009 13:17	Brown, Nancy L	'PER Significance Level' was changed from Further Evaluation to PIE/CIM. 'PER Screening Comments' was changed.
05/06/2009 09:09	Brown, Nancy L	'Independent Assessment Review' was changed.
05/06/2009 09:40	Brown, Nancy L	'Instructions for Responsible Manager' was changed.
06/04/2009 14:01	Brown, Nancy L	'PER Screening Comments' was changed.
06/05/2009 10:15	Brown, Nancy L	'SMP Owner' was changed. 'PER Significance Level' was changed from PIE/CIM to PER with Resolution. 'PER Screening Comments' was changed. 'Selected Consequence Codes' have changed.
06/08/2009 10:39	Brown, Nancy L	'Instructions for Responsible Manager' was changed.

-- End of Report --
07/09/2009 03:13 PM

Task# WRPS-PER-2009-0617

E-STARS[R] Report
Task Detail Report
07/09/2009 1513

TASK INFORMATION			
Task#	WRPS-PER-2009-0617		
Subject	RES; DNFSB Site Representative believes that TWINS should be classified as Level A as defined in the DOE G 414.1-4.		
Parent Task#		**Status**	Open
Reference		**Due**	07/23/2009
Originator	^PER Coordinator	**Priority**	Medium
Originator Phone		**Category**	PER
Origination Date	04/09/2009 1452	**Generic1**	None
Remote Task#		**Generic2**	None
Deliverable	PER Review	**Generic3**	None
Class	None	**View Permissions**	Global
Instructions	*No Instructions*		

ROUTING LISTS		
1	Responsible Manager	Active
	Review the PER Screening Tab and Senior Manager Review for requested data. Complete the task in E-STARS in accordance with TFC-ESHQ-Q_C-C-01, and TFC-ESHQ-Q_ADM-C-12 Apparent Cause Analysis & Corrective Action Planning.	
	• Reynolds, Jacob G - Assign - Completed with comments - 04/23/2009 1445 *Instructions:*	
	• Reynolds, Jacob G - Assign - Completed with comments - 05/04/2009 1048 *Instructions:* Did you contact the originator about the PER? Document your contact in the response window.	
	• ^PER Screening(Brown, Nancy L) - Assign - Completed - 05/05/2009 1317 *Instructions:*	
	• ^Mgr Review(Brown, Nancy L) - Review - Concur - 05/06/2009 0914 *Instructions:*	
	• Reynolds, Jacob G - Assign - Decline (Withdrawn) - 06/04/2009 1401 *Instructions:*	
	• ^PER Screening(Brown, Nancy L) - Review - Concur - 06/05/2009 1337 *Instructions:*	
	• ^Mgr Review(Brown, Nancy L) - Review - Concur - 06/08/2009 1035 *Instructions:*	
	• Reynolds, Jacob G - Assign - Awaiting Response - Due Date - 07/23/2009 1630 *Instructions:*	
2	Review Initial PER	Inactive
	Review New PER	
	• ^SO(Wallgren, Carl B) - Review - Concur - 04/09/2009 1601 *Instructions:*	
	• ^PER Screening(Brown, Nancy L) - Review - Concur - 04/10/2009 1457 *Instructions:*	
	• ^Mgr Review - Review - Cancelled - 04/13/2009 1102	

Task# WRPS-PER-2009-0617

	Instructions:
ATTACHMENTS	
Attachments	1. Link to PER
COMMENTS	
Poster	^PER Coordinator (Owen, Annette) - 04/21/2009 0740
	Extend to 4/27/09 per Tino Maciuca direction.
Poster	Reynolds, Jacob G - 04/23/2009 1445
	Completed
	TWINS was originally graded as Safety Class B (PNNL) or C (TOC) because the calculations in TWINS are not directly used in facility safety class determination without user review. TWINS is a database, and its primary function is to store and present data, not to perform calculations. TWINS also predates the DOE order that implements the software safety class, so is exempt from the DOE order as legacy software. Nonetheless, TWINS does perform Unit Liter Does (ULD) and Toxicological Sum-of-Fractions (SOF) calculations, which in turn are compared to values accepted in the DSA and used in new safety evaluations. A conservative approach would be to designate the ULD and SOF calculations as Safety Class A software and apply this QA level to any new TWINS upgrades. The cost of revising the TWINS QA documentation to reflect Safety Class A is prohibitive. The SOF and ULD calculations on TWINS are a very small portion of TWINS, and could be easily removed. Therefore, the most cost effective strategy is to remove the ULD and SOF calculations from the TWINS database and maintain them separately. This is the recommendation of this evaluation. The safety class of TWINS without the SOF and ULD calculations will be determined and the appropriate software QA safety class will be applied.
Poster	Reynolds, Jacob G - 05/04/2009 1048
	Completed
	TWINS was originally graded as Safety Class B (PNNL) or C (TOC) because the calculations in TWINS are not directly used in facility safety class determination without user review. TWINS is a database, and its primary function is to store and present data, not to perform calculations. TWINS also predates the DOE order that implements the software safety class, so is exempt from the DOE order as legacy software. Nonetheless, TWINS does perform Unit Liter Does (ULD) and Toxicological Sum-of-Fractions (SOF) calculations, which in turn are compared to values accepted in the DSA and used in new safety evaluations. A conservative approach would be to designate the ULD and SOF calculations as Safety Class A software and apply this QA level to any new TWINS upgrades. The cost of revising the TWINS QA documentation to reflect Safety Class A is prohibitive. The SOF and ULD calculations on TWINS are a very small portion of TWINS, and could be easily removed. Therefore, the most cost effective strategy is to remove the ULD and SOF calculations from the TWINS database and maintain them separately. This is the recommendation of this evaluation. The safety class of TWINS without the SOF and ULD calculations will be determined and the appropriate software QA safety class will be applied.
Poster	Reynolds, Jacob G - 06/04/2009 1351
	Decline
	Management has requested that this PER be rescreened as a PER with resolution. Therefore, I am declining this action so that it can be rescreened.

TASK DUE DATE HISTORY

Modified	06/08/2009 1038 - ^PER Coordinator (Brown, Nancy L)	**New Due Date**	07/23/2009 1630
Modified	05/06/2009 0939 - ^PER Coordinator (Brown, Nancy L)	**New Due Date**	07/06/2009 1630
Modified	04/21/2009 0740 - ^PER Coordinator (Owen, Annette)	**New Due Date**	04/27/2009 1630
Modified	04/13/2009 1102 - ^PER Coordinator	**New Due Date**	04/20/2009 1630

Task# WRPS-PER-2009-0617			
Modified	04/13/2009 1102 - ^PER Coordinator	**New Due Date**	04/20/2009 1630
Modified	04/09/2009 1452 - ^PER Coordinator	**New Due Date**	04/11/2009 1630
SUB TASK HISTORY			
No Subtasks			

-- end of report --

Save

Problem Evaluation Request (PER)

WRPS-PER-2009-0709
Closed 06/09/2009 12:45

PER No	Date of Discovery	Time of Discovery (24:00)	Project
WRPS-PER-2009-0709	04/20/2009	07:00	SWE

Location

All Tank Farms

How Was Problem Discovered

Assessment

Description of Concern or Problem

During the annual WRPS Employee Concern Program assessment, two minor issues were identified with the WRPS Employee Concerns Program Procedure, TFC-BSM-HR_MA-C-02, Rev B-5.

1. DOE Order 442.1A, Section 4.b.8 requires contractors to minimize, correct, or prevent recurrence issues identified and substantiated through the ECP. The WRPS ECP Procedure, TFC-BSM-HR_MA-C-02, Rev B-5, Section 4.9 does not address actions to prevent recurrence.

2. DOE Order 442.1A, Section 4.c.2 requires advising a concerned employee if the ECP does not resolve a concern regarding other offices with authority or responsibility for addressing the subject matter of the concern. The WRPS ECP Procedure, TFC-BSM-HR_MA-C-02, Rev B-5, Section 4.11.8 does not address other offices with authority or responsibility for addressing the subject matter of the concern.

Requirement Not Satisfied	Source Document Number

Equipment Identification Number	System Identification
None	

Immediate actions Taken or Planned

A procedure change has been initiated on April 20, 2009 in accordance with the guidance contained in TFC-BSM-AD-C-01, REV M-1, ADMINISTRATIVE DOCUMENT DEVELOPMENT AND MAINTENANCE.

Recommended Corrective actions

Initiate minor changes to the ECP Procedure TFC-BSM-HR_MA-C-02, Rev B-5, Sections 4.9 and 4.11 as described above.

Originator Contact

No

Originators Name	Originators ID	Originators Phone	Date Initiated
Steelman, Mark R	H0079368	(509) 372-2750	04/20/2009

SHIFT OPERATIONS REVIEW

Title

WRPS Employee Concern Program assessment

How Discovered	Agency
self-ID prior to event	

Reportability	SSC Operability	Operability Review	Comp Measures Req
Non-Reportable	N/A	N/A	

Describe actions Taken or Recommended

No additional Base Ops Shift Office actions required at this time.

SO Reviewer Name	SO Reviewer ID	SO Reviewer Phone	SO Review Date
Johnson, Brian A	H0003531	(509) 373-2696	04/20/2009

SCREENING

PER Significance Level	
TUF	

Independent Assessment Review	Occurrence Report Number	Externally Identified	
No		No	

Assigned Responsible Manager	Facilities Rep / SSO	Safety Management Rep	
Kennedy, Edward E			
Program		**Safety Management Program**	
• N/A		• Performance Assessment	
PER Screening Comments			
No comments (Nancy Brown 04/21/09)			
Causal Code			
MGT/Comm/Train	**Human Performance**	**GEMS**	**Equip/Eng/Other**
Failed Barrier	**ORPS Code**	**Functional Area**	**Work Process**
	Not Applicable	SWE/Personnel Readiness	• Assessments
ISMS	**Consequence Code**		
Provide feedback and continuous improvement	• Procedure - Administrative - Procedure ambiguous, in error, could not be worked, was not used		
PER Screening Chair	**PER Screening Chair ID**	**PER Screening Chair Phone**	**PER Screening Date**
Brown, Nancy L	H0088797	(509) 373-0992	04/21/2009
PAAA REVIEW			
PAAA Screening	**PAAA Codes**	**Function Codes**	
PAAA, Non-NTS Reportable	• 10 CFR 830.122 (d)(1)	• Procedure Quality	
NTS Report Number	**NTS Report Date**		
Repetitive / Recurrent	**Programmatic**	**Intentional Violation / Misrepresentation**	
No	No	No	
PAAA Screening Comments			
PAAA Reviewer Name	**PAAA Review Date**		
Anderson, Craig E	04/21/2009		
PAAA Approver Name	**PAAA Approve Date**		
Anderson, Craig E	04/22/2009		
SENIOR MANAGEMENT REVIEW/CONCURRENCE			
TF Operations Morning Leadership Call			
N/A			
Instructions for Responsible Manager			
Review the PER and determine action required. Complete action and enter statement on TUF tab. 'Complete' the task in E-STARS in accordance with TFC-ESHQ-Q_C-C-01, Problem Evaluation Request.			
Senior Management	**Sr Mgmt ID**	**Sr Mgmt Phone**	**Sr Mgmt Review Date**
Brown, Nancy L	H0088797	(509) 373-0992	04/22/2009
Track Until Fixed (TUF)			
Action Taken			
Enhanced procedure to address the 2 improvement opportunities identified during the independent speciality assessment.			
ATTACHMENTS			
Link to PER			
TFC-BSM-HR_MA-C-02%2C%20Employee%20Concerns%20Program[2].docx			

TFC-BSM-HR_MA-C-02%2C%20Employee%20Concerns%20Program[2].docx		
TFC-BSM-HR_MA-C-02,_Employee_Concerns_Program.docx		
AUDIT HISTORY		
Change Date	**Auditor**	**Comments**
04/22/2009 09:06	Brown, Nancy L	Responsible Manager Task Launched by Brown, Nancy L

-- End of Report --
06/09/2009 01:15 PM

Task# WRPS-PER-2009-0709			
E-STARS[R] Report Task Detail Report 06/09/2009 1315			
TASK INFORMATION			
Task#	WRPS-PER-2009-0709		
Subject	TUF; WRPS Employee Concern Program assessment		
Parent Task#		Status	CLOSED 06/09/2009
Reference		Due	08/22/2009
Originator	^PER Coordinator	Priority	Medium
Originator Phone		Category	PER
Origination Date	04/20/2009 1238	Generic1	None
Remote Task#		Generic2	None
Deliverable	PER Review	Generic3	None
Class	None	View Permissions	Global
Instructions	*No Instructions*		
ROUTING LISTS			
1	Responsible Manager		Inactive
	Review the PER and determine action required. Complete action and enter statement on TUF tab. 'Complete' the task in E-STARS in accordance with TFC-ESHQ-Q_C-C-01, Problem Evaluation Request.		
	• Kennedy, Edward E - Assign - Completed - 05/11/2009 0850 *Instructions:*		
	• Kennedy, Edward E - Close - Withdrawn - 04/22/2009 0912 *Instructions:* Verify the TUF Tab and close the task when complete		
2	Review Initial PER		Inactive
	Review New PER		
	• ^SO(Johnson, Brian A) - Review - Concur - 04/20/2009 1328 *Instructions:*		
	• ^PER Screening(Brown, Nancy L) - Review - Concur - 04/21/2009 1449 *Instructions:*		
	• ^Mgr Review - Review - Cancelled - 04/22/2009 0906 *Instructions:*		
ATTACHMENTS			

Task# WRPS-PER-2009-0709			
Attachments	1. Link to PER 2. TFC-BSM-HR_MA-C-02%2C%20Employee%20Concerns%20Program[2].docx 3. TFC-BSM-HR_MA-C-02%2C%20Employee%20Concerns%20Program[2].docx 4. TFC-BSM-HR_MA-C-02,_Employee_Concerns_Program.docx		
COMMENTS			
Poster	Kennedy, Edward E - 05/11/2009 0838		
Editor	Kennedy, Edward E - 05/11/2009 0850		
	Updated PER to incorporate the revised Employee Concerns Program procedure capturing the 2 improvement opportunities identified during the ECP independent speciality assessment. Revised procedure is attached.		
Poster	^PER Coordinator (Glaman, Linda R) - 06/09/2009 1230		
	CLOSED		
	PER complete. L Glaman		
TASK DUE DATE HISTORY			
Modified	04/22/2009 0906 - ^PER Coordinator	New Due Date	08/18/2009 1630
Modified	04/22/2009 0906 - ^PER Coordinator	New Due Date	08/22/2009 1630
Modified	04/20/2009 1238 - ^PER Coordinator	New Due Date	04/22/2009 1630
SUB TASK HISTORY			
No Subtasks			
-- end of report --			

Ownership matrix

TABLE OF CONTENTS

1.0 PURPOSE AND SCOPE 2
2.0 IMPLEMENTATION 2
3.0 RESPONSIBILITIES 2
4.0 PROCEDURE 2
- 4.1 Concern Identification and Raising an Employee Concern 2
- 4.2 Concern Intake 3
- 4.3 Preliminary Concern Evaluation Process 4
- 4.4 Concern Resolution Process (Concern Resolved by ECP or Referral) 5
- 4.5 Concern Resolution Process (Concern Transfer) 6
- 4.6 Concern Resolution Process (Concern Meets Criteria for Closure) 6
- 4.7 Employee Concerns Closure Meeting 6
- 4.8 Concern Investigation 7
- 4.9 Determine Recommendations and Corrective Actions 9
- 4.10 Basis for Closing Concerns 9
- 4.11 Concern Closure Documentation 10
- 4.12 Reporting 11
- 4.13 ECP and 24-hour Hotline Access 11
- 4.14 Employee Concern Tracking 12
- 4.15 Follow-up to Employee Concern Closure 13
- 4.16 Training 13
- 4.17 ECP Self-Assessment 13

5.0 DEFINITIONS 14
6.0 RECORDS 16
7.0 SOURCES 16
- 7.1 Requirements 16
- 7.2 References 17

TABLE OF FIGURES

Figure 1. Employee Concerns Program Flowchart. 18

TABLE OF ATTACHMENTS

ATTACHMENT A – JOB DESCRIPTION FOR EMPLOYEE CONCERNS PROGRAM SPECIALIST 19

1.0 PURPOSE AND SCOPE
(7.1.1.d, 7.1.1.b, 7.1.2)

This procedure establishes and documents the processes and methods of the Washington River Protection Solutions LLC (WRPS) Employee Concerns Program (ECP) for resolving concerns associated with the Hanford River Protection Project (RPP) submitted by WRPS employees and its subcontractors. This procedure also identifies the procedure for resolving employee concerns referred to WRPS by the Department of Energy (DOE) Office of River Protection (ORP).

The ECP shall provide a process to adequately and effectively investigate and respond to concerns dealing with safety, health, security, quality, environmental protection, business ethics, compliance with laws and regulations, fraud, abuse, mismanagement, wrong doing, physical working conditions, assertions of retaliation, hostile work environment, chilling effect and violations of the DOE Hanford Site Zero Tolerance for Retaliation Policy.

2.0 IMPLEMENTATION

This procedure is effective on the date shown in the header.

3.0 RESPONSIBILITIES

Responsibilities are contained within Section 4.0.

4.0 PROCEDURE

See Figure 1 for process flowchart.

4.1 Concern Identification and Raising an Employee Concern

Employee

1. Take concerns to immediate manager/supervisor, safety representative.

2. If you do not feel your concern is resolved appropriately by your manager/supervisor, or if you do not feel you can take your concern to your manager/supervisor, file your concern with the WRPS ECP or DOE ORP. (7.1.1.b)

3. Choose one of the following methods to report an employee concern to the WRPS ECP office:

   - Employee Concerns form (A-6002-861) (forms may be found in the WRPS ECP office and the Hanford Site WRPS intranet)
   - E-mail
   - Letter
   - Memorandum
   - Telephone
   - 24-hour hot line (373-5444).

4. Choose one of the following alternatives when reporting an employee concern to the WRPS ECP office.

   - Provide your name if you wish to be interviewed or contacted for questions and comments during the investigation.
   - If you want your concern handled confidentially, provide your name and indicate that you do not want your name revealed to anyone but the ECP.
   - Choose anonymity. You may choose anonymity but it would be a good idea to use a "code" name or number to identify yourself. This enables you to call the WRPS ECP office for updates and progress of the investigation while continuing to maintain anonymity.

Employee Concerns Specialist

5. Carry out these actions if DOE ORP receives concerns from employees and refers them to WRPS.

   a. Perform concern intake (Section 4.2), and

   b. Complete prioritization process for DOE SCO Referral Concerns (Section 4.3).

Management

6. Notify the ECP office if you learn of any concern that an employee wants addressed by the ECP.

Human Resources

7. Contact ECP or provide assistance for the employee to contact the ECP if you learn of any concern that an employee wants addressed during an exit interview.

4.2 Concern Intake

Employee Concerns Specialist

1. Contact the employee, if possible, to acknowledge receipt of the concern and to clarify issues.

2. Determine what action and communication, if any, the employee has already taken to resolve the concern.

3. Determine what action the employee considers satisfactory to resolve or correct the concern.

   NOTE: Employees are encouraged to first seek resolution with the first-line supervisors or through existing complaint or dispute resolution systems but have the right to report concerns through the WRPS ECP or the DOE ORP.

4. Inform the employee that (1) the investigation and evaluation of the concern will proceed as far as possible without his/her identity being known if confidentiality is requested, (2) WRPS management does not tolerate reprisal against or intimidation of employees who have reported concerns.

   NOTE: DOE Confidentiality Guidelines are found in DOE G 442.1-1, Reference 8.

5. Complete an Employee Concern form (A-6002-861). If the concern is anonymous and is received by telephone, request as much specific information about the concern as possible.

6. Assign a tracking number that can be used in all future references to the concern.

7. Share the tracking number with the individual reporting the confidential concern so he/she can refer to the tracking number when calling in for updated information.

8. Indicate the date that feedback is expected to be available, and ask the individual to call back on that date so anonymity can be maintained.

9. Document the conversation with the employee regarding the release of his/her identity and include the documentation in the concern file.

10. Record the concern on the Employee Concern form (A-6002-861) and attach the original media if the concern is submitted in a format other than the Employee Concern form.

11. Record the information in the Employee Concern Tracking Log and create a concern file.

12. Perform Preliminary Concern Evaluation (proceed to Section 4.3).

4.3 Preliminary Concern Evaluation Process

Employee Concerns Specialist

1. Review the concern for imminent danger or condition and stop work action (refer to TFC-POL-32).

   NOTE: Where imminent danger is present, the appropriate management must be notified immediately.

2. Review the concern and report any concerns that indicate a radiological safety, nuclear safety, safety basis or health concern to the Price-Anderson Amendments Act (PAAA) Event Program Lead for appropriate actions.

3. Review the concern for possible classified or sensitive unclassified information.

   a. If potentially classified or sensitive unclassified, take it to the appropriate authorized information specialist for sanitation.

4. Confer with the WRPS Legal counsel to determine the appropriate process to resolve the concern if the employee concern involves other potential legal issues such as alleged harassment, retaliation, discrimination, fraud, waste, abuse of government property, wrong doing, or violation of the law (Section 4.4).

5. Determine the appropriate process to resolve the concern from the following:

   a. Investigate, evaluate, and resolve through the ECP, in coordination with DOE or external offices, when required. Proceed to Section 4.4 and complete the procedure.

   b. Referral of the concern to another WRPS organization and tracked by the ECP until they are resolved. (e.g., Labor Relations, Human Resources, Legal). Proceed to Section 4.4 and complete the procedure.

   c. Transfer the concern to another WRPS organization, contractor, or subcontractor organization with jurisdiction over the issues. Proceed to Section 4.5 and complete the procedure.

   d. Close consistent with requirements in Section 4.10. Proceed to Section 4.6 and complete the procedure.

4.4 Concern Resolution Process (Concern Resolved by ECP or Referral)

Employee Concerns Specialist	1.	Attempt to resolve employee concerns in a manner that protects the health and safety of both employees and the public, ensure effective and efficient operation of programs, and use Alternate Dispute Resolution (ADR) techniques, whenever possible. (7.1.1.a, 7.1.1.e)
Investigator	2.	Complete any investigation(s) required to determine the facts associated with the employee concern (Section 4.8).
	3.	Update the employee on the concern resolution progress on a monthly basis.
	4.	Develop recommendations and corrective actions per Section 4.9 to resolve the employee concern.
Employee Concerns Specialist	5.	Determine when the concern can be closed based on the criteria described in Section 4.10.
Investigator	6.	Perform employee concerns closure meeting per Section 4.7.

7. Prepare employee concern closure documentation (Section 4.11).

8. Prepare and file the concern-related documents, reports, and forms in a locked and secure file cabinet with limited access.

9. Maintain a chronology for the concern case file.

Employee Concerns Specialist

10. Enter employee concern data in the ECP Tracking System (Section 4.14).

4.5 Concern Resolution Process (Concern Transfer)
(7.1.1.b.2)

Employee Concerns Specialist

1. Transfer the concern by memorandum or e-mail to another WRPS organization, contractor, or subcontractor organization with jurisdiction over the issues, when those issues are outside the scope of the ECP (e.g., DOE ORP, another Hanford contractor, EEO, Union).

2. Close the concern in accordance with the criteria described in Section 4.10.

3. Document the closure per Section 4.11, as appropriate.

4. Enter employee concern data in the ECP Tracking System (Section 4.14)

4.6 Concern Resolution Process (Concern Meets Criteria for Closure)
(7.1.1.e)

Employee Concerns Specialist

1. Close the concern in accordance with the criteria described in Section 4.10.

2. Document the closure per Section 4.11, as appropriate.

3. Enter employee concern data in the ECP Tracking System (Section 4.14).

4. Maintain a chronology for the concern case file.

4.7 Employee Concerns Closure Meeting

Investigator

1. Meet with the concerned individual, if possible. If a meeting is not practical or timely, communicate by phone and/or e-mail or letter.

2. Communicate the results of the employee concern to the employee.

3. Obtain the employee's comments during this meeting.

4. Attempt to resolve any comments made by the employee.

4.8 Concern Investigation

Investigator

1. Review the basic elements of the concern (maintaining employee confidentiality) and obtain a qualified subject matter expert to assist in the investigation of the concern, as appropriate.

2. Maintain interfaces with the following for the purpose of concern investigation and resolution:

   - DOE ORP
   - Hanford contractor ECP managers
   - Subcontractor programs
   - Subcontractor senior management
   - Human Resources
   - Labor organizations.

3. Develop a resolution/investigation plan and obtain the functional/ project manager's commitment for action.

   NOTE: Based on a need for an independent investigation, unless otherwise agreed to by the employee, the organizational element named in the concern should not be involved in the conduct or management of the investigation. Similarly, individuals or organizations outside the concerned employee's organization should not be selected to conduct the investigation where their involvement presents a conflict of interest.

4. Utilize, as appropriate, investigative guidelines and tools provided below:

   - A-6003-444, Line of Inquiry for Poor Performance Review or Evaluation
   - A-6003-445, Line of Inquiry for Discipline
   - A-6003-446, Line of Inquiry for Failure to Hire/Recall/ Rollover for Employment
   - A-6003-447, Line of Inquiry for Reduction In Force/"Lay Off"/ Involuntary Separation or Retirement
   - A-6003-448, Line of Inquiry for "Blacklisting" Case
   - A-6003-449, Line of Inquiry for Termination for Cause
   - A-6003-450, Line of Inquiry for Transfer/Demotion/Removal of Duties and/or Responsibilities
   - A-6003-451, Possible Adverse Actions.
   - A-6003-452, Chilling Effect Analysis
   - A-6003-453, Hostile Work Environment (HEW) Analysis
   - A-6003-454, Retaliation Analysis

5. Collect and evaluate relevant information, communicate between involved parties, and seek common ground for resolution.

   NOTE: Employees represented by a bargaining unit may request the presence of a steward during investigative interviews.

6. Maintain a chronology of the investigation.

7. Keep a file record of information obtained in a secured, locked filing system with limited and controlled access.

8. Notify the employee if the concern cannot be resolved within a month of original receipt. Follow up with the employee at least monthly.

9. Determine recommendations and corrective actions per Section 4.9.

10. Prepare an Employee Concerns Investigation Report that documents the following information:

    - Concern number and statement of concern
    - Executive summary
    - Investigation dates
    - Investigation report date
    - Subject matter expert who contributed to the investigation (name and title)
    - Investigator (name, title, signature)
    - Scope of investigation
    - Investigation details (include an explanation of attached documents such as investigative tools)
    - Corrective actions taken or planned (include Problem Evaluation Request (PER) number or other tacking numbers)

      NOTE: Confidential or personnel actions shall be tracked by number only and referenced to the concern number case file. No names or details of the specific actions taken shall be placed in the PER or corrective action tracking system.
    - Summary, conclusions with basis (state the concern was substantiated, partially substantiated, not substantiated, or indeterminate)
    - Corrective actions recommended (include tracking numbers)
    - Employee comments (indicate when the employee was contacted and briefed on the investigation results. Document any comments the employee had relative to the concern investigation/resolution and the corrective actions taken or planned)
    - Employees contacted (include names and titles)
    - References (formal documents supporting the investigation)
    - Attachments (e.g., statements, interview records, tools, significant e-mail, documents not available by reference, etc.).

11. Review reports of concerns for classified and sensitive unclassified information and, if necessary, sanitize by an authorized information or classification specialist.

4.9 Determine Recommendations and Corrective Actions

Investigator

1. Determine what actions the employee recommends to remedy or resolve the employee concern.

2. Work with management to determine, document, and initiate corrective actions that will resolve or remedy the employee concern.

3. Identify lessons learned and provide this information to appropriate organizations for consideration.

4. Document any deficiencies, conditions adverse to quality, and corrective actions in the appropriate corrective action tracking systems.

Management

5. Take prompt and effective action to correct deficiencies and initiate corrective actions to resolve employee concerns and prevent recurrence.

4.10 Basis for Closing Concerns

Employee Concerns Specialist

1. Close a concern when one of the following criteria is satisfied:

   - The concern has been investigated, necessary corrective actions have been identified, the organization responsible for taking the corrective action has accepted jurisdiction of the corrective actions, the corrective action is documented in an official WRPS corrective action tracking system as appropriate, and the resolution has been documented in the WRPS Employee Concern Tracking Log (7.1.1.e)

   - The concern has been investigated and no corrective action is deemed necessary (7.1.1.e)

   - The subject matter of the concern is outside the scope of the WRPS ECP, and the concern has been transferred to another organization with jurisdiction over the subject matter (7.1.1.e)

   - The concerned individual who raised the concern was advised that the concern is outside the scope of the WRPS ECP's available means to address the concern and direct transfer of the concern to another organization is not appropriate (7.1.1.e)

   - The concerns or issues lack sufficient detail for investigation (e.g., frivolous or too general) and the concerned individual has been notified that the concern is closed. (7.1.1.e)

4.11 Concern Closure Documentation
(7.1.1.g)

Employee Concerns Specialist

1. Complete the Employee Concern form (A-6002-861). The following shall be documented in the Basis For Closure field:

   - Conclusions with basis
   - Basis for closure
   - Actions that were or will be taken to address and/or correct the concerns, and problems (include corrective action tracking numbers)
   - Comments made by the employee after reviewing the investigative results, conclusions, and basis for concern closure.

   If the concern was transferred to another WRPS organization, contractor, or subcontractor, obtain the information from them along with appropriate signature of the investigator.

2. Review the investigative results and conclusions with the Legal department for employee concerns related to Harassment, Intimidation, Retaliation, and Discrimination (HIRD), violation of law, waste, wrong doing, fraud, and abuse.

3. Resolve all comments made by the Legal department prior to discussion with the employee and commence preparation of closure documentation and the DOE ORP Concern Referral Form.

4. Prepare and deliver a DOE ORP Concern Referral Form for employee concerns referred from DOE ORP.

5. Contact the employee and communicate the following:

   NOTE: Face-To-Face contact is preferred. A phone call or e-mail is an acceptable alternative. Send the employee a letter if other means are unsuccessful.

   - Summary of fact finding and conclusions with basis
   - Basis for closure
   - Actions that were or will be taken to address and/or correct the concerns, problems, and/or violations of codes or standards
   - Comments made by the employee after reviewing the investigative results, conclusions, and basis for concern closure.

6. Review completed concerns for value to other employees.

   NOTE: If appropriate, investigation results may be published as an information-sharing process; however, it is imperative to maintain confidentiality and anonymity of the employee who raised an anonymous concern.

Employee

7. Acknowledge, in writing, by return of the concern closure letter that you received the letter and that you consider the issue to be closed or provide comments to WRPS ECP.

8. If you are not satisfied with the adequacy or effectiveness of action taken by WRPS ECP regarding a safety concern, visit or call the DOE ORP or other offices with authority or responsibility for addressing the subject matter of the concern.

4.12 Reporting

Employee Concerns Specialist

1. Prepare periodic reports of significant issues, trends, concerns received, concerns closed, or remaining unresolved concerns to WRPS executives as appropriate.

2. Provide reports to the DOE ORP, as requested.

3. Provide the DOE ORP prompt notification of potentially high profile concerns, allegations of retaliation or harassment, and significant trends. (7.1.1.g)

4. Cooperate with DOE ORP actions, including requests for documentation or information involving employee concerns. (7.1.1.h)

5. Prepare a report of concerns for the PAAA Event Program Lead's review on a quarterly basis.

4.13 ECP and 24-hour Hotline Access

Employee Concerns Specialist

1. Maintain an ECP hotline with 24-hour access to the program. The phone number is (509-373-5444).

2. Maintain the WRPS ECP procedure on the WRPS intranet.

3. Provide new employees at orientation with an ECP brochure explaining the program.

4. Place and maintain ECP posters with the ECP 24-hour hotline number, which shall be placed in conspicuous locations at WRPS work areas.

5. Provide the Employee Concern form (A-6002-861) and this procedure to be accessible to employees on the WRPS intranet.

Prime Teaming Contract Administration

6. Inform subcontractor employees:

   - The ECP process/availability; employees are encouraged to first seek resolution with the first-line supervisors or through existing complaint or dispute resolution systems but have the right to report concerns through the contractor (WRPS) ECP or the DOE ORP.

   - About management's intolerance for reprisal against or intimidation of employees who have reported concerns.

4.14 Employee Concern Tracking

Employee Concerns Specialist

1. Maintain a secure (password protected) Employee Concern Tracking Log according to existing rules applicable to sensitive materials, as well as applicable privacy act requirements.

2. Include in the tracking log the following information:

   - Concern number

   - Date and time concern received

   - Method of receipt (e.g., walk-in, mail, hotline, telephone, etc.)

   - Category of concern (e.g., environmental, safety, health, etc.)

   - Brief description of concern

   - Whether the concern meets the criteria for an imminent danger

   - Whether the concern is a potential PAAA noncompliance. If yes, provide the PAAA evaluation referencing information

   - Whether the concern was transferred/referred to another organization or authority (date and organization)

   - Name of the investigator and organization

   - Whether the concern was substantiated, partial substantiated, not substantiated, or indeterminate

   - Disposition/resolution, including any corrective action(s) taken or anticipated (including tracking numbers)

   - Basis for closure

   - Date the employee was notified of the resolution

   - Date the concern was closed.

4.15 Follow-up to Employee Concern Closure

Management (appropriate office)

1. Periodically determine whether WRPS or its subcontractors have taken action to minimize, correct, or prevent recurrence of program, process, or management weakness identified and/or determined through the ECP.

ECP Specialist

2. Periodically review corrective actions related to employee concerns to determine the following:
   - Corrective measures have been completed
   - Actions taken were effective
   - Deficient conditions have not recurred
   - Appropriate organizations performed periodic reviews of concern resolution.

4.16 Training

Management

1. Ensure personnel responsible for implementing the WRPS ECP or investigating concerns are trained to properly carry out their responsibilities described in the ECP Specialist job description in Attachment A (e.g., training on the identification and classification of health and safety issues, PAAA, how to investigate workplace and administrative issues, and dispute resolution techniques).

4.17 ECP Self-Assessment
(7.1.1.f)

Employee Concerns Specialist

1. Perform a self-assessment (see TFC-ESHQ-AP-C-07) at least annually to measure the effectiveness of the ECP and the process used to implement these requirements.
2. Review concern case files to determine if the investigative methods and documentation are sufficiently detailed to permit investigation or other appropriate level of review.
3. Identify problems that hinder the ECP from achieving its objectives.

Management

4. Correct problems identified in the ECP self-assessment that hinder the ECP from achieving its objective.

ECP/Management

5. Cooperate with assessments used to verify that WRPS and its subcontractors have acted to minimize, correct, or prevent recurrence of the situation that precipitated a valid concern. (7.1.1.c)
6. Perform a concerned individual self-assessment at least annually to solicit feedback from ECP users and to measure the effectiveness of the ECP.

5.0 DEFINITIONS

Alternative dispute resolution (ADR). A variety of processes used to resolve disputes through use of a neutral third party in an attempt to avoid judicial or administrative litigation. Forms of alternative dispute resolution include mediation, partnering, ombudsman ship, neutral evaluation, non-binding arbitration, mini-trial, and binding arbitration (e.g., the Hanford Concern Council).

Chilling effect. An environment where employees do not feel free to raise concerns to the government; thus preventing the free flow of information regarding public safety and health.

Confidential. A concern submitted by an employee who wishes to have his or her identity protected from all persons except the ECP staff, or a concern submitted by an employee who wishes to have his or her identity protected from all persons except the ECP staff and those with a need to know.

Discrimination. An action of treating employees differently for a prohibited or illegal reason, e.g., gender, race, age, religious preference or national origin. Also included is treating someone differently because they raised a safety concern or engaged in legally protected activities.

Employee concern. A good faith expression by an employee that a policy or practice of DOE or one of its contractors or subcontractors should be improved, modified, or terminated. Concerns can address issues such as health, safety, the environment, management practices, fraud, waste, or reprisal for raising a concern.

Harassment. In the context of the ECP, an action taken or condoned by an employer against or toward an employee to bother, belittle, humiliate, or impede that employee in his or her work environment, relationship with others, or job performance because the employee reasonably and in good faith raised a concern. Harassing actions can include, but are not limited to, threatening, restraining, coercing, blacklisting, mocking, humiliating, or isolating an employee.

Imminent danger condition concern. Any activity or condition that places an employee, their co-workers, other contractors, the public, or the environment in danger.

Intimidation. Any action taken by coworker or supervisors against or toward an employee to cause that employee to cease engaging in protected activities; to be fearful of engaging in protected activities; or to otherwise be afraid for his or her safety, reputation, or job security as a result of having identified concerns about any aspect of DOE activities or operations.

Investigation. An inquiry conducted by or on behalf of the ECP for the purpose of evaluating and resolving a concern, usually involving interviews, inspection of relevant documents, sites, or equipment, and an evaluation of practices being followed.

Protected activities. Activities such as raising concerns or otherwise making disclosures protected under law, regulations, or legal precedent of information related to DOE operations, which the individual reasonably and in good faith believes is evidence of unsafe, unlawful, fraudulent, or wasteful practices.

Referral of a concern. Transmittal of an employee to another organization for investigation, with the results of the investigation being reported to the ECP within a specified time period with a resolution including corrective actions, if applicable.

Resolution of a concern. Actions taken and decisions made that respond to the concern by verifying the concern and establishing plans to correct identified deficiencies, correcting the

deficiencies, or determining that the concern is not substantiated and that no corrective action is required.

Reprisal/retaliation. Any action taken against an employee in response to, or in revenge for, the employee having raised, in good faith, reasonable concerns about any aspect of DOE-related operations. Reprisals against contractor employees may lead to the imposition of penalties under the Price Anderson Amendments Act of 1988 (Pub. L. 100-49, August 20, 1988), implemented by DOE under 10 CFR, Part 820 (Part 820). Pursuant to Part 820, to the extent a reprisal by a DOE contractor results from an employee's involvement in matters of nuclear safety in connection with a DOE nuclear activity, the reprisal could constitute a violation of a DOE nuclear safety requirement.

Safe work environment. A safe work environment, which is an important element of a good safety culture, is one in which employees feel free to raise concerns without fear of retaliation, regardless of whether it is to their own line management or to external regulators.

Sensitive Unclassified Information. Sensitive Unclassified Information does not define a specific set of restrictions. SUI is any information, regardless of its physical form or characteristics, which has been determined to have relative sensitivity, requires mandatory protection because of statutory or regulatory restrictions or for which disclosure, loss, misuse, alteration, or destruction could adversely affect national security, government, or private interests. National security interests are those unclassified matters that relate to the national defense or foreign relations for the U.S. government. Governmental interests are those related, but not limited, to the wide range of government or government-derived economic, human, financial, industrial, agricultural, technological, and law enforcement information, as well as privacy or confidentiality of personal or commercial proprietary information.

Transfer of a concern. Transmittal of a concern by the ECP office to an office with subject matter responsibility or expertise pursuant to which that office will address the concern with the concerned individual.

6.0 RECORDS

The following records are generated during the performance of this procedure:

Record Description	Vital Record Y/N	QA Record Y/N	QA Record Retention L/NP	NARA Retention Schedule	Other Retention Requirements	Records Custodian
Employee Concern Tracking Log	N	N	N/A	ADM-1.43a1	N/A	ECP Office
Employee Concern Investigation and Resolution Reports	N	N	N/A	ADM-1.43a1	N/A	ECP Office
Employee Concerns Reports	N	N	N/A	ADM-1.43a1	N/A	ECP Office
Management and ECP self-assessment results	N	N	N/A	ADM-1.43a1	N/A	ECP Office
Chronology of investigation	N	N	N/A	ADM-1.43a1	N/A	ECP Office
Completed forms (Employee, DOE Referral, etc.)	N	N	N/A	ADM-1.43a1	N/A	ECP Office

The identified record custodian is responsible for record retention in accordance with TFC-BSM-IRM_DC-C-02.

7.0 SOURCES

7.1 Requirements

1. DOE Order 442.1A (Supplemented Rev), "Department of Energy Employee Concerns Program."
   a. Section A - Headquarters CRD, 1st bullet.
   b. Section A - Headquarters CRD, 2nd bullet.
   c. Section A - Headquarters CRD, 3rd bullet.
   d. Section C - Supplemental Requirements, General Supplemental Requirements, Item 1.
   e. Section C - Supplemental Requirements, General Supplemental Requirements, Item 2.
   f. Section C - Supplemental Requirements, General Supplemental Requirements, Item 3.
   g. Section C - Supplemental Requirements, General Supplemental Requirements, Item 4.
   h. Section C - Supplemental Requirements, General Supplemental Requirements, Item 5.

2. RPP-MP-003, "Integrated Environment, Safety, and Health Management System Description for the Tank Operations Contractor."

7.2 References

1. 10 CFR 708, "DOE Contractor Employee Protection Program."
2. DOE G 442.1-1, "Department of Energy Employee Concerns Program Guide," 2-02-99.
3. DOE Hanford Site "Zero Tolerance for Retaliation Policy."
4. Price-Anderson Amendments Act (PAAA) of 1988.
5. TFC-BSM-IRM_DC-C-02, "Records Management."
6. TFC-BSM-HR_DD-C-01, "Equal Employment Opportunity/Affirmative Action."
7. TFC-ESHQ-AP-C-07, "Specialty Assessment."
8. TFC-ESHQ-PAAA-C-01, "Price-Anderson Amendments Act Evaluation and Reporting."
9. TFC-ESHQ-Q_C-C-01, "Problem Evaluation Request."
10. TFC-POL-32, "Stop Work Responsibility."

Figure 1. Employee Concerns Program Flowchart.

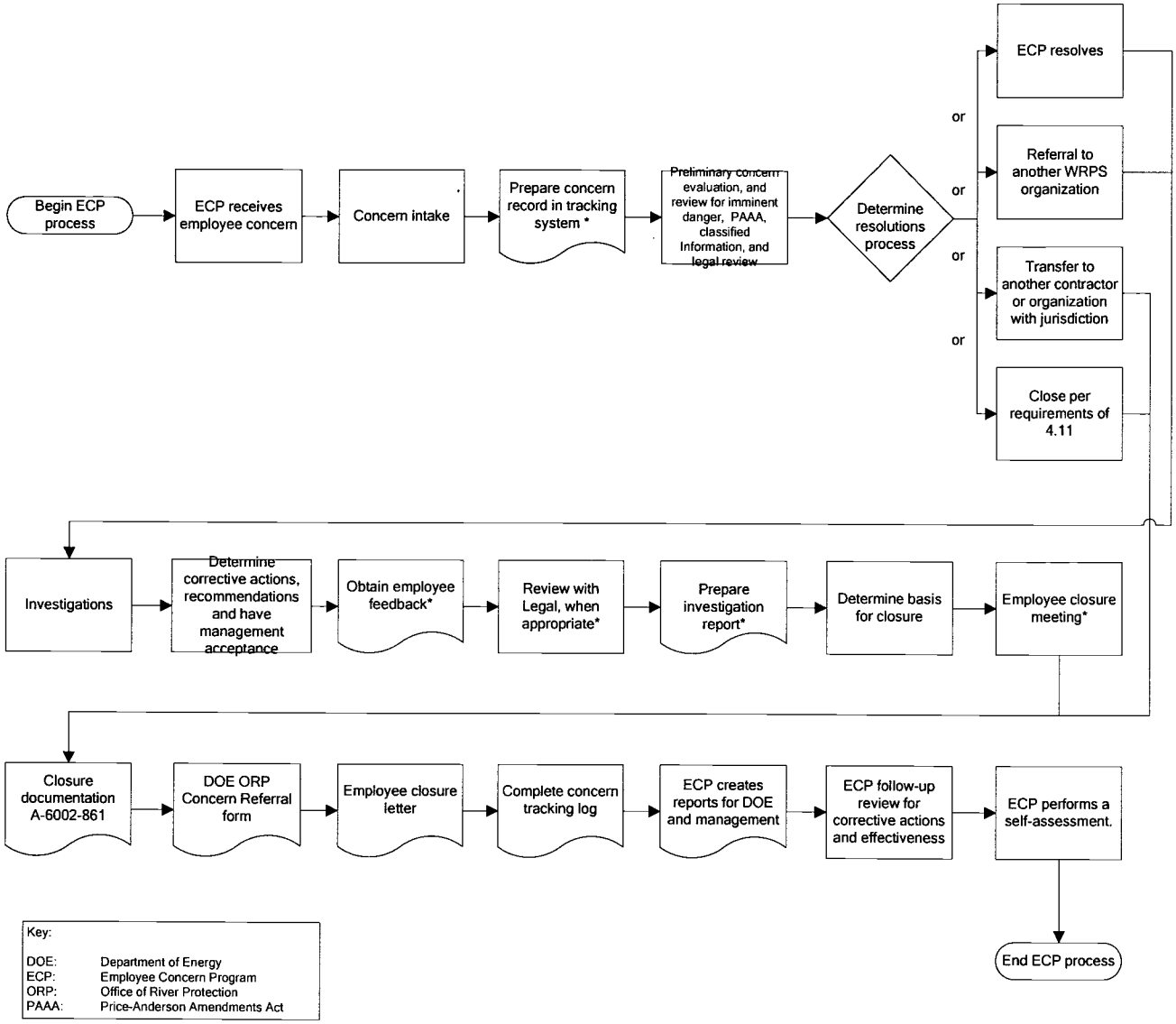

ATTACHMENT A – JOB DESCRIPTION FOR EMPLOYEE CONCERNS PROGRAM SPECIALIST

Charter/Role:

Responsible for administration and operation of the ECP for WRPS in compliance with applicable WRPS policies and procedures, DOE orders, and directives. Provide company and subcontractor employees with an independent and objective avenue for anonymous and confidential reporting, investigating, and resolving concerns related to safety, health, quality, security, environment, retaliation, chilling effect, ethics, waste, fraud, and abuse.

Responsibilities:

- Ensure that employee concerns are processed in accordance with DOE Order CRD 442.1A, Rev. 1, and followed through to resolution.
- Work with employees and managers to collect, evaluate, and communicate relevant information to the parties involved.
- Communicate with the originator of the concern to determine what action the originator would consider satisfactory to resolve the concern.
- Identify potential resolutions and obtain commitments from management, then communicat the information to the employee.
- Maintain an Employee Concerns Tracking Log and a secure filing system.
- Coordinate, with the appropriate company management, the concerns that are filed by their employees.
- Document referrals and transmittals of employee concerns and provide the concerned employee with this information. Referrals and transmittals will be tracked to closure in the Employee Concerns Tracking Log.
- Evaluate and attempt to resolve employee concerns in a manner that protects the health and safety of employees and the public, ensure effective and efficient operation of programs, and use alternative dispute resolution techniques whenever appropriate.
- Make every attempt to strike a balance between encouraging employees to use the ECP and taking concerns to their immediate managers/supervisors.
- Prepare quarterly and annual reports and review for lessons learned and possible adverse trends.
- Conduct self-assessments at least annually to measure the effectiveness of the ECP and take necessary actions to improve ECP operations.
- Coordinate with WRPS Procurement Services to ensure appropriate subcontract requirements for the availability and use of ECP and the means that will be used to evaluate the subcontractors' use of and notification to employees of ECP.

ATTACHMENT A – JOB DESCRIPTION FOR EMPLOYEE CONCERNS PROGRAM SPECIALIST (cont.)

- When seeking resolution to an open concern, the ECP Specialist may elevate the concern to the appropriate level of management.
- Conduct investigative fact finding, as appropriate, to resolve concerns and prepare reports of findings and conclusions.
- Prepare and conduct training sessions with employees, managers, and new hires, and make business presentations, when required.

Critical Interfaces:

The ECP Specialist communicates with concern submitters, WRPS executives and managers, subject matter experts, DOE and contractor ECP managers,subcontractor managers, Human Resources, labor organizations, attorneys, and others on a daily basis. Briefs the WRPS Project Manager and executive staff on program status, issues of significance, and employee concerns on a quarterly basis but more frequently, as necessary. Excellent written and verbal skills are essential.

The ECP Specialist communicates with concern submitters, WRPS executives and managers, subject matter experts, DOE and contractor ECP managers, Human Resources, subcontractor managers, labor organizations, attorneys, and others, as necessary, to ensure that concerns are identified, action plans to investigate concerns are developed and implemented, and recommendations to resolve concerns are developed and executed in a timely manner.

Qualifications:

Depth and Breadth of Knowledge Required to Perform the Job:

Must understand and comply with DOE ECP orders and directives, WRPS policies and procedures. Must have extensive knowledge of industry practices to plan and conduct effective investigations and inquire into concerns raised through the ECP. Must be an effective writter with the ability to clearly and concisely present information. Must have a working knowledge of employment law and DOE regulations related to employee protection in order to recognize and resolve related issues. Must be completely knowledgeable in the administration of ECP procedures in compliance with DOE Order 442.1A.

Specialized Education and Experience Requirements:

- Minimum of Bachelor's degree in Human Resources, Labor Relations, Engineering, Science, or Business with 10-15 years related experience or equivalent combination of education and experience.
- Demonstrated ability to properly identify and protect confidential and sensitive unclassified information with a high degree of personal ethics and integrity. Must have specialized training in the conduct of ECP investigations. Must have specialized training in mediation, or alternate dispute resolution.
- Must be computer literate and proficient in MS Word and the use of information database.

ATTACHMENT A – JOB DESCRIPTION FOR EMPLOYEE CONCERNS PROGRAM SPECIALIST (cont.)

Communication Skills Required:

Must possess strong verbal and written communication skills and be able to effectively communicate with concerned individuals, company staff, craft workers, management, executives, DOE staff, and regulators.

Problem Solving Skills Required:

Must be able to relate and compare data from different sources, identify concerns, secure relevant information, and identify relationships. Must be able to critically evaluate situations and make sound decisions based on all the facts. Must be able to gather information and extract information for decision making through oral fact finding or interviewing combined with effective listening.

Ownership matrix

TABLE OF CONTENTS

1.0 PURPOSE AND SCOPE 2
2.0 IMPLEMENTATION 2
3.0 RESPONSIBILITIES 2
4.0 PROCEDURE 2
- 4.1 Concern Identification and Raising an Employee Concern 2
- 4.2 Concern Intake 3
- 4.3 Preliminary Concern Evaluation Process 4
- 4.4 Concern Resolution Process (Concern Resolved by ECP or Referral) 5
- 4.5 Concern Resolution Process (Concern Transfer) 6
- 4.6 Concern Resolution Process (Concern Meets Criteria for Closure) 6
- 4.7 Employee Concerns Closure Meeting 6
- 4.8 Concern Investigation 7
- 4.9 Determine Recommendations and Corrective Actions 9
- 4.10 Basis for Closing Concerns 9
- 4.11 Concern Closure Documentation 10
- 4.12 Reporting 11
- 4.13 ECP and 24-hour Hotline Access 11
- 4.14 Employee Concern Tracking 12
- 4.15 Follow-up to Employee Concern Closure 13
- 4.16 Training 13
- 4.17 ECP Self-Assessment 13

5.0 DEFINITIONS 14
6.0 RECORDS 16
7.0 SOURCES 16
- 7.1 Requirements 16
- 7.2 References 17

TABLE OF FIGURES

Figure 1. Employee Concerns Program Flowchart. 18

TABLE OF ATTACHMENTS

ATTACHMENT A – JOB DESCRIPTION FOR EMPLOYEE CONCERNS PROGRAM SPECIALIST 19

1.0 PURPOSE AND SCOPE
(7.1.1.d, 7.1.1.b, 7.1.2)

This procedure establishes and documents the processes and methods of the Washington River Protection Solutions LLC (WRPS) Employee Concerns Program (ECP) for resolving concerns associated with the Hanford River Protection Project (RPP) submitted by WRPS employees and its subcontractors. This procedure also identifies the procedure for resolving employee concerns referred to WRPS by the Department of Energy (DOE) Office of River Protection (ORP).

The ECP shall provide a process to adequately and effectively investigate and respond to concerns dealing with safety, health, security, quality, environmental protection, business ethics, compliance with laws and regulations, fraud, abuse, mismanagement, wrong doing, physical working conditions, assertions of retaliation, hostile work environment, chilling effect and violations of the DOE Hanford Site Zero Tolerance for Retaliation Policy.

2.0 IMPLEMENTATION

This procedure is effective on the date shown in the header.

3.0 RESPONSIBILITIES

Responsibilities are contained within Section 4.0.

4.0 PROCEDURE

See Figure 1 for process flowchart.

4.1 Concern Identification and Raising an Employee Concern

Employee

1. Take concerns to immediate manager/supervisor, safety representative.

2. If you do not feel your concern is resolved appropriately by your manager/supervisor, or if you do not feel you can take your concern to your manager/supervisor, file your concern with the WRPS ECP or DOE ORP. (7.1.1.b)

3. Choose one of the following methods to report an employee concern to the WRPS ECP office:

   - Employee Concerns form (A-6002-861) (forms may be found in the WRPS ECP office and the Hanford Site WRPS intranet)
   - E-mail
   - Letter
   - Memorandum
   - Telephone
   - 24-hour hot line (373-5444).

4. Choose one of the following alternatives when reporting an employee concern to the WRPS ECP office.

   - Provide your name if you wish to be interviewed or contacted for questions and comments during the investigation.
   - If you want your concern handled confidentially, provide your name and indicate that you do not want your name revealed to anyone but the ECP.
   - Choose anonymity. You may choose anonymity but it would be a good idea to use a "code" name or number to identify yourself. This enables you to call the WRPS ECP office for updates and progress of the investigation while continuing to maintain anonymity.

Employee Concerns Specialist

5. Carry out these actions if DOE ORP receives concerns from employees and refers them to WRPS.

   a. Perform concern intake (Section 4.2), and

   b. Complete prioritization process for DOE SCO Referral Concerns (Section 4.3).

Management

6. Notify the ECP office if you learn of any concern that an employee wants addressed by the ECP.

Human Resources

7. Contact ECP or provide assistance for the employee to contact the ECP if you learn of any concern that an employee wants addressed during an exit interview.

4.2 Concern Intake

Employee Concerns Specialist

1. Contact the employee, if possible, to acknowledge receipt of the concern and to clarify issues.

2. Determine what action and communication, if any, the employee has already taken to resolve the concern.

3. Determine what action the employee considers satisfactory to resolve or correct the concern.

   NOTE: Employees are encouraged to first seek resolution with the first-line supervisors or through existing complaint or dispute resolution systems but have the right to report concerns through the WRPS ECP or the DOE ORP.

4. Inform the employee that (1) the investigation and evaluation of the concern will proceed as far as possible without his/her identity being known if confidentiality is requested, (2) WRPS management does not tolerate reprisal against or intimidation of employees who have reported concerns.

   NOTE: DOE Confidentiality Guidelines are found in DOE G 442.1-1, Reference 8.

5. Complete an Employee Concern form (A-6002-861). If the concern is anonymous and is received by telephone, request as much specific information about the concern as possible.

6. Assign a tracking number that can be used in all future references to the concern.

7. Share the tracking number with the individual reporting the confidential concern so he/she can refer to the tracking number when calling in for updated information.

8. Indicate the date that feedback is expected to be available, and ask the individual to call back on that date so anonymity can be maintained.

9. Document the conversation with the employee regarding the release of his/her identity and include the documentation in the concern file.

10. Record the concern on the Employee Concern form (A-6002-861) and attach the original media if the concern is submitted in a format other than the Employee Concern form.

11. Record the information in the Employee Concern Tracking Log and create a concern file.

12. Perform Preliminary Concern Evaluation (proceed to Section 4.3).

4.3 Preliminary Concern Evaluation Process

Employee Concerns Specialist

1. Review the concern for imminent danger or condition and stop work action (refer to TFC-POL-32).

   NOTE: Where imminent danger is present, the appropriate management must be notified immediately.

2. Review the concern and report any concerns that indicate a radiological safety, nuclear safety, safety basis or health concern to the Price-Anderson Amendments Act (PAAA) Event Program Lead for appropriate actions.

3. Review the concern for possible classified or sensitive unclassified information.

   a. If potentially classified or sensitive unclassified, take it to the appropriate authorized information specialist for sanitation.

4. Confer with the WRPS Legal counsel to determine the appropriate process to resolve the concern if the employee concern involves other potential legal issues such as alleged harassment, retaliation, discrimination, fraud, waste, abuse of government property, wrong doing, or violation of the law (Section 4.4).

5. Determine the appropriate process to resolve the concern from the following:

   a. Investigate, evaluate, and resolve through the ECP, in coordination with DOE or external offices, when required. Proceed to Section 4.4 and complete the procedure.

   b. Referral of the concern to another WRPS organization and tracked by the ECP until they are resolved. (e.g., Labor Relations, Human Resources, Legal). Proceed to Section 4.4 and complete the procedure.

   c. Transfer the concern to another WRPS organization, contractor, or subcontractor organization with jurisdiction over the issues. Proceed to Section 4.5 and complete the procedure.

   d. Close consistent with requirements in Section 4.10. Proceed to Section 4.6 and complete the procedure.

4.4 Concern Resolution Process (Concern Resolved by ECP or Referral)

Employee Concerns Specialist	1.	Attempt to resolve employee concerns in a manner that protects the health and safety of both employees and the public, ensure effective and efficient operation of programs, and use Alternate Dispute Resolution (ADR) techniques, whenever possible. (7.1.1.a, 7.1.1.e)
Investigator	2.	Complete any investigation(s) required to determine the facts associated with the employee concern (Section 4.8).
	3.	Update the employee on the concern resolution progress on a monthly basis.
	4.	Develop recommendations and corrective actions per Section 4.9 to resolve the employee concern.
Employee Concerns Specialist	5.	Determine when the concern can be closed based on the criteria described in Section 4.10.
Investigator	6.	Perform employee concerns closure meeting per Section 4.7.

7. Prepare employee concern closure documentation (Section 4.11).

8. Prepare and file the concern-related documents, reports, and forms in a locked and secure file cabinet with limited access.

9. Maintain a chronology for the concern case file.

Employee Concerns Specialist

10. Enter employee concern data in the ECP Tracking System (Section 4.14).

4.5 Concern Resolution Process (Concern Transfer)
(7.1.1.b.2)

Employee Concerns Specialist

1. Transfer the concern by memorandum or e-mail to another WRPS organization, contractor, or subcontractor organization with jurisdiction over the issues, when those issues are outside the scope of the ECP (e.g., DOE ORP, another Hanford contractor, EEO, Union).

2. Close the concern in accordance with the criteria described in Section 4.10.

3. Document the closure per Section 4.11, as appropriate.

4. Enter employee concern data in the ECP Tracking System (Section 4.14)

4.6 Concern Resolution Process (Concern Meets Criteria for Closure)
(7.1.1.e)

Employee Concerns Specialist

1. Close the concern in accordance with the criteria described in Section 4.10.

2. Document the closure per Section 4.11, as appropriate.

3. Enter employee concern data in the ECP Tracking System (Section 4.14).

4. Maintain a chronology for the concern case file.

4.7 Employee Concerns Closure Meeting

Investigator

1. Meet with the concerned individual, if possible. If a meeting is not practical or timely, communicate by phone and/or e-mail or letter.

2. Communicate the results of the employee concern to the employee.

3. Obtain the employee's comments during this meeting.

4. Attempt to resolve any comments made by the employee.

4.8 Concern Investigation

Investigator

1. Review the basic elements of the concern (maintaining employee confidentiality) and obtain a qualified subject matter expert to assist in the investigation of the concern, as appropriate.

2. Maintain interfaces with the following for the purpose of concern investigation and resolution:

   - DOE ORP
   - Hanford contractor ECP managers
   - Subcontractor programs
   - Subcontractor senior management
   - Human Resources
   - Labor organizations.

3. Develop a resolution/investigation plan and obtain the functional/ project manager's commitment for action.

   NOTE: Based on a need for an independent investigation, unless otherwise agreed to by the employee, the organizational element named in the concern should not be involved in the conduct or management of the investigation. Similarly, individuals or organizations outside the concerned employee's organization should not be selected to conduct the investigation where their involvement presents a conflict of interest.

4. Utilize, as appropriate, investigative guidelines and tools provided below:

   - A-6003-444, Line of Inquiry for Poor Performance Review or Evaluation
   - A-6003-445, Line of Inquiry for Discipline
   - A-6003-446, Line of Inquiry for Failure to Hire/Recall/ Rollover for Employment
   - A-6003-447, Line of Inquiry for Reduction In Force/"Lay Off"/ Involuntary Separation or Retirement
   - A-6003-448, Line of Inquiry for "Blacklisting" Case
   - A-6003-449, Line of Inquiry for Termination for Cause
   - A-6003-450, Line of Inquiry for Transfer/Demotion/Removal of Duties and/or Responsibilities
   - A-6003-451, Possible Adverse Actions.
   - A-6003-452, Chilling Effect Analysis
   - A-6003-453, Hostile Work Environment (HEW) Analysis
   - A-6003-454, Retaliation Analysis

5. Collect and evaluate relevant information, communicate between involved parties, and seek common ground for resolution.

   NOTE: Employees represented by a bargaining unit may request the presence of a steward during investigative interviews.

6. Maintain a chronology of the investigation.

7. Keep a file record of information obtained in a secured, locked filing system with limited and controlled access.

8. Notify the employee if the concern cannot be resolved within a month of original receipt. Follow up with the employee at least monthly.

9. Determine recommendations and corrective actions per Section 4.9.

10. Prepare an Employee Concerns Investigation Report that documents the following information:

    - Concern number and statement of concern
    - Executive summary
    - Investigation dates
    - Investigation report date
    - Subject matter expert who contributed to the investigation (name and title)
    - Investigator (name, title, signature)
    - Scope of investigation
    - Investigation details (include an explanation of attached documents such as investigative tools)
    - Corrective actions taken or planned (include Problem Evaluation Request (PER) number or other tacking numbers)

      NOTE: Confidential or personnel actions shall be tracked by number only and referenced to the concern number case file. No names or details of the specific actions taken shall be placed in the PER or corrective action tracking system.

    - Summary, conclusions with basis (state the concern was substantiated, partially substantiated, not substantiated, or indeterminate)
    - Corrective actions recommended (include tracking numbers)
    - Employee comments (indicate when the employee was contacted and briefed on the investigation results. Document any comments the employee had relative to the concern investigation/resolution and the corrective actions taken or planned)
    - Employees contacted (include names and titles)
    - References (formal documents supporting the investigation)
    - Attachments (e.g., statements, interview records, tools, significant e-mail, documents not available by reference, etc.).

11. Review reports of concerns for classified and sensitive unclassified information and, if necessary, sanitize by an authorized information or classification specialist.

4.9 Determine Recommendations and Corrective Actions

Investigator

1. Determine what actions the employee recommends to remedy or resolve the employee concern.

2. Work with management to determine, document, and initiate corrective actions that will resolve or remedy the employee concern.

3. Identify lessons learned and provide this information to appropriate organizations for consideration.

4. Document any deficiencies, conditions adverse to quality, and corrective actions in the appropriate corrective action tracking systems.

Management

5. Take prompt and effective action to correct deficiencies and initiate corrective actions to resolve employee concerns and prevent recurrence.

4.10 Basis for Closing Concerns

Employee Concerns Specialist

1. Close a concern when one of the following criteria is satisfied:

   - The concern has been investigated, necessary corrective actions have been identified, the organization responsible for taking the corrective action has accepted jurisdiction of the corrective actions, the corrective action is documented in an official WRPS corrective action tracking system as appropriate, and the resolution has been documented in the WRPS Employee Concern Tracking Log (7.1.1.e)

   - The concern has been investigated and no corrective action is deemed necessary (7.1.1.e)

   - The subject matter of the concern is outside the scope of the WRPS ECP, and the concern has been transferred to another organization with jurisdiction over the subject matter (7.1.1.e)

   - The concerned individual who raised the concern was advised that the concern is outside the scope of the WRPS ECP's available means to address the concern and direct transfer of the concern to another organization is not appropriate (7.1.1.e)

   - The concerns or issues lack sufficient detail for investigation (e.g., frivolous or too general) and the concerned individual has been notified that the concern is closed. (7.1.1.e)

4.11 Concern Closure Documentation
(7.1.1.g)

Employee Concerns Specialist

1. Complete the Employee Concern form (A-6002-861). The following shall be documented in the Basis For Closure field:

   - Conclusions with basis
   - Basis for closure
   - Actions that were or will be taken to address and/or correct the concerns, and problems (include corrective action tracking numbers)
   - Comments made by the employee after reviewing the investigative results, conclusions, and basis for concern closure.

   If the concern was transferred to another WRPS organization, contractor, or subcontractor, obtain the information from them along with appropriate signature of the investigator.

2. Review the investigative results and conclusions with the Legal department for employee concerns related to Harassment, Intimidation, Retaliation, and Discrimination (HIRD), violation of law, waste, wrong doing, fraud, and abuse.

3. Resolve all comments made by the Legal department prior to discussion with the employee and commence preparation of closure documentation and the DOE ORP Concern Referral Form.

4. Prepare and deliver a DOE ORP Concern Referral Form for employee concerns referred from DOE ORP.

5. Contact the employee and communicate the following:

   NOTE: Face-To-Face contact is preferred. A phone call or e-mail is an acceptable alternative. Send the employee a letter if other means are unsuccessful.

   - Summary of fact finding and conclusions with basis
   - Basis for closure
   - Actions that were or will be taken to address and/or correct the concerns, problems, and/or violations of codes or standards
   - Comments made by the employee after reviewing the investigative results, conclusions, and basis for concern closure.

6. Review completed concerns for value to other employees.

   NOTE: If appropriate, investigation results may be published as an information-sharing process; however, it is imperative to maintain confidentiality and anonymity of the employee who raised an anonymous concern.

Employee

7. Acknowledge, in writing, by return of the concern closure letter that you received the letter and that you consider the issue to be closed or provide comments to WRPS ECP.

8. If you are not satisfied with the adequacy or effectiveness of action taken by WRPS ECP regarding a safety concern, visit or call the DOE ORP or other offices with authority or responsibility for addressing the subject matter of the concern.

4.12 Reporting

Employee Concerns Specialist

1. Prepare periodic reports of significant issues, trends, concerns received, concerns closed, or remaining unresolved concerns to WRPS executives as appropriate.

2. Provide reports to the DOE ORP, as requested.

3. Provide the DOE ORP prompt notification of potentially high profile concerns, allegations of retaliation or harassment, and significant trends. (7.1.1.g)

4. Cooperate with DOE ORP actions, including requests for documentation or information involving employee concerns. (7.1.1.h)

5. Prepare a report of concerns for the PAAA Event Program Lead's review on a quarterly basis.

4.13 ECP and 24-hour Hotline Access

Employee Concerns Specialist

1. Maintain an ECP hotline with 24-hour access to the program. The phone number is (509-373-5444).

2. Maintain the WRPS ECP procedure on the WRPS intranet.

3. Provide new employees at orientation with an ECP brochure explaining the program.

4. Place and maintain ECP posters with the ECP 24-hour hotline number, which shall be placed in conspicuous locations at WRPS work areas.

5. Provide the Employee Concern form (A-6002-861) and this procedure to be accessible to employees on the WRPS intranet.

Prime Teaming Contract Administration

6. Inform subcontractor employees:
   - The ECP process/availability; employees are encouraged to first seek resolution with the first-line supervisors or through existing complaint or dispute resolution systems but have the right to report concerns through the contractor (WRPS) ECP or the DOE ORP.
   - About management's intolerance for reprisal against or intimidation of employees who have reported concerns.

4.14 Employee Concern Tracking

Employee Concerns Specialist

1. Maintain a secure (password protected) Employee Concern Tracking Log according to existing rules applicable to sensitive materials, as well as applicable privacy act requirements.

2. Include in the tracking log the following information:
   - Concern number
   - Date and time concern received
   - Method of receipt (e.g., walk-in, mail, hotline, telephone, etc.)
   - Category of concern (e.g., environmental, safety, health, etc.)
   - Brief description of concern
   - Whether the concern meets the criteria for an imminent danger
   - Whether the concern is a potential PAAA noncompliance. If yes, provide the PAAA evaluation referencing information
   - Whether the concern was transferred/referred to another organization or authority (date and organization)
   - Name of the investigator and organization
   - Whether the concern was substantiated, partial substantiated, not substantiated, or indeterminate
   - Disposition/resolution, including any corrective action(s) taken or anticipated (including tracking numbers)
   - Basis for closure
   - Date the employee was notified of the resolution
   - Date the concern was closed.

4.15 Follow-up to Employee Concern Closure

Management (appropriate office)

1. Periodically determine whether WRPS or its subcontractors have taken action to minimize, correct, or prevent recurrence of program, process, or management weakness identified and/or determined through the ECP.

ECP Specialist

2. Periodically review corrective actions related to employee concerns to determine the following:
   - Corrective measures have been completed
   - Actions taken were effective
   - Deficient conditions have not recurred
   - Appropriate organizations performed periodic reviews of concern resolution.

4.16 Training

Management

1. Ensure personnel responsible for implementing the WRPS ECP or investigating concerns are trained to properly carry out their responsibilities described in the ECP Specialist job description in Attachment A (e.g., training on the identification and classification of health and safety issues, PAAA, how to investigate workplace and administrative issues, and dispute resolution techniques).

4.17 ECP Self-Assessment
(7.1.1.f)

Employee Concerns Specialist

1. Perform a self-assessment (see TFC-ESHQ-AP-C-07) at least annually to measure the effectiveness of the ECP and the process used to implement these requirements.

2. Review concern case files to determine if the investigative methods and documentation are sufficiently detailed to permit investigation or other appropriate level of review.

3. Identify problems that hinder the ECP from achieving its objectives.

Management

4. Correct problems identified in the ECP self-assessment that hinder the ECP from achieving its objective.

ECP/Management

5. Cooperate with assessments used to verify that WRPS and its subcontractors have acted to minimize, correct, or prevent recurrence of the situation that precipitated a valid concern. (7.1.1.c)

6. Perform a concerned individual self-assessment at least annually to solicit feedback from ECP users and to measure the effectiveness of the ECP.

5.0 DEFINITIONS

Alternative dispute resolution (ADR). A variety of processes used to resolve disputes through use of a neutral third party in an attempt to avoid judicial or administrative litigation. Forms of alternative dispute resolution include mediation, partnering, ombudsman ship, neutral evaluation, non-binding arbitration, mini-trial, and binding arbitration (e.g., the Hanford Concern Council).

Chilling effect. An environment where employees do not feel free to raise concerns to the government; thus preventing the free flow of information regarding public safety and health.

Confidential. A concern submitted by an employee who wishes to have his or her identity protected from all persons except the ECP staff, or a concern submitted by an employee who wishes to have his or her identity protected from all persons except the ECP staff and those with a need to know.

Discrimination. An action of treating employees differently for a prohibited or illegal reason, e.g., gender, race, age, religious preference or national origin. Also included is treating someone differently because they raised a safety concern or engaged in legally protected activities.

Employee concern. A good faith expression by an employee that a policy or practice of DOE or one of its contractors or subcontractors should be improved, modified, or terminated. Concerns can address issues such as health, safety, the environment, management practices, fraud, waste, or reprisal for raising a concern.

Harassment. In the context of the ECP, an action taken or condoned by an employer against or toward an employee to bother, belittle, humiliate, or impede that employee in his or her work environment, relationship with others, or job performance because the employee reasonably and in good faith raised a concern. Harassing actions can include, but are not limited to, threatening, restraining, coercing, blacklisting, mocking, humiliating, or isolating an employee.

Imminent danger condition concern. Any activity or condition that places an employee, their co-workers, other contractors, the public, or the environment in danger.

Intimidation. Any action taken by coworker or supervisors against or toward an employee to cause that employee to cease engaging in protected activities; to be fearful of engaging in protected activities; or to otherwise be afraid for his or her safety, reputation, or job security as a result of having identified concerns about any aspect of DOE activities or operations.

Investigation. An inquiry conducted by or on behalf of the ECP for the purpose of evaluating and resolving a concern, usually involving interviews, inspection of relevant documents, sites, or equipment, and an evaluation of practices being followed.

Protected activities. Activities such as raising concerns or otherwise making disclosures protected under law, regulations, or legal precedent of information related to DOE operations, which the individual reasonably and in good faith believes is evidence of unsafe, unlawful, fraudulent, or wasteful practices.

Referral of a concern. Transmittal of an employee to another organization for investigation, with the results of the investigation being reported to the ECP within a specified time period with a resolution including corrective actions, if applicable.

Resolution of a concern. Actions taken and decisions made that respond to the concern by verifying the concern and establishing plans to correct identified deficiencies, correcting the

deficiencies, or determining that the concern is not substantiated and that no corrective action is required.

Reprisal/retaliation. Any action taken against an employee in response to, or in revenge for, the employee having raised, in good faith, reasonable concerns about any aspect of DOE-related operations. Reprisals against contractor employees may lead to the imposition of penalties under the Price Anderson Amendments Act of 1988 (Pub. L. 100-49, August 20, 1988), implemented by DOE under 10 CFR, Part 820 (Part 820). Pursuant to Part 820, to the extent a reprisal by a DOE contractor results from an employee's involvement in matters of nuclear safety in connection with a DOE nuclear activity, the reprisal could constitute a violation of a DOE nuclear safety requirement.

Safe work environment. A safe work environment, which is an important element of a good safety culture, is one in which employees feel free to raise concerns without fear of retaliation, regardless of whether it is to their own line management or to external regulators.

Sensitive Unclassified Information. Sensitive Unclassified Information does not define a specific set of restrictions. SUI is any information, regardless of its physical form or characteristics, which has been determined to have relative sensitivity, requires mandatory protection because of statutory or regulatory restrictions or for which disclosure, loss, misuse, alteration, or destruction could adversely affect national security, government, or private interests. National security interests are those unclassified matters that relate to the national defense or foreign relations for the U.S. government. Governmental interests are those related, but not limited, to the wide range of government or government-derived economic, human, financial, industrial, agricultural, technological, and law enforcement information, as well as privacy or confidentiality of personal or commercial proprietary information.

Transfer of a concern. Transmittal of a concern by the ECP office to an office with subject matter responsibility or expertise pursuant to which that office will address the concern with the concerned individual.

6.0 RECORDS

The following records are generated during the performance of this procedure:

Record Description	Vital Record Y/N	QA Record Y/N	QA Record Retention L/NP	NARA Retention Schedule	Other Retention Requirements	Records Custodian
Employee Concern Tracking Log	N	N	N/A	ADM-1.43a1	N/A	ECP Office
Employee Concern Investigation and Resolution Reports	N	N	N/A	ADM-1.43a1	N/A	ECP Office
Employee Concerns Reports	N	N	N/A	ADM-1.43a1	N/A	ECP Office
Management and ECP self-assessment results	N	N	N/A	ADM-1.43a1	N/A	ECP Office
Chronology of investigation	N	N	N/A	ADM-1.43a1	N/A	ECP Office
Completed forms (Employee, DOE Referral, etc.)	N	N	N/A	ADM-1.43a1	N/A	ECP Office

The identified record custodian is responsible for record retention in accordance with TFC-BSM-IRM_DC-C-02.

7.0 SOURCES

7.1 Requirements

1. DOE Order 442.1A (Supplemented Rev), "Department of Energy Employee Concerns Program."
   a. Section A - Headquarters CRD, 1st bullet.
   b. Section A - Headquarters CRD, 2nd bullet.
   c. Section A - Headquarters CRD, 3rd bullet.
   d. Section C - Supplemental Requirements, General Supplemental Requirements, Item 1.
   e. Section C - Supplemental Requirements, General Supplemental Requirements, Item 2.
   f. Section C - Supplemental Requirements, General Supplemental Requirements, Item 3.
   g. Section C - Supplemental Requirements, General Supplemental Requirements, Item 4.
   h. Section C - Supplemental Requirements, General Supplemental Requirements, Item 5.

2. RPP-MP-003, "Integrated Environment, Safety, and Health Management System Description for the Tank Operations Contractor."

7.2 References

1. 10 CFR 708, "DOE Contractor Employee Protection Program."
2. DOE G 442.1-1, "Department of Energy Employee Concerns Program Guide," 2-02-99.
3. DOE Hanford Site "Zero Tolerance for Retaliation Policy."
4. Price-Anderson Amendments Act (PAAA) of 1988.
5. TFC-BSM-IRM_DC-C-02, "Records Management."
6. TFC-BSM-HR_DD-C-01, "Equal Employment Opportunity/Affirmative Action."
7. TFC-ESHQ-AP-C-07, "Specialty Assessment."
8. TFC-ESHQ-PAAA-C-01, "Price-Anderson Amendments Act Evaluation and Reporting."
9. TFC-ESHQ-Q_C-C-01, "Problem Evaluation Request."
10. TFC-POL-32, "Stop Work Responsibility."

Figure 1. Employee Concerns Program Flowchart.

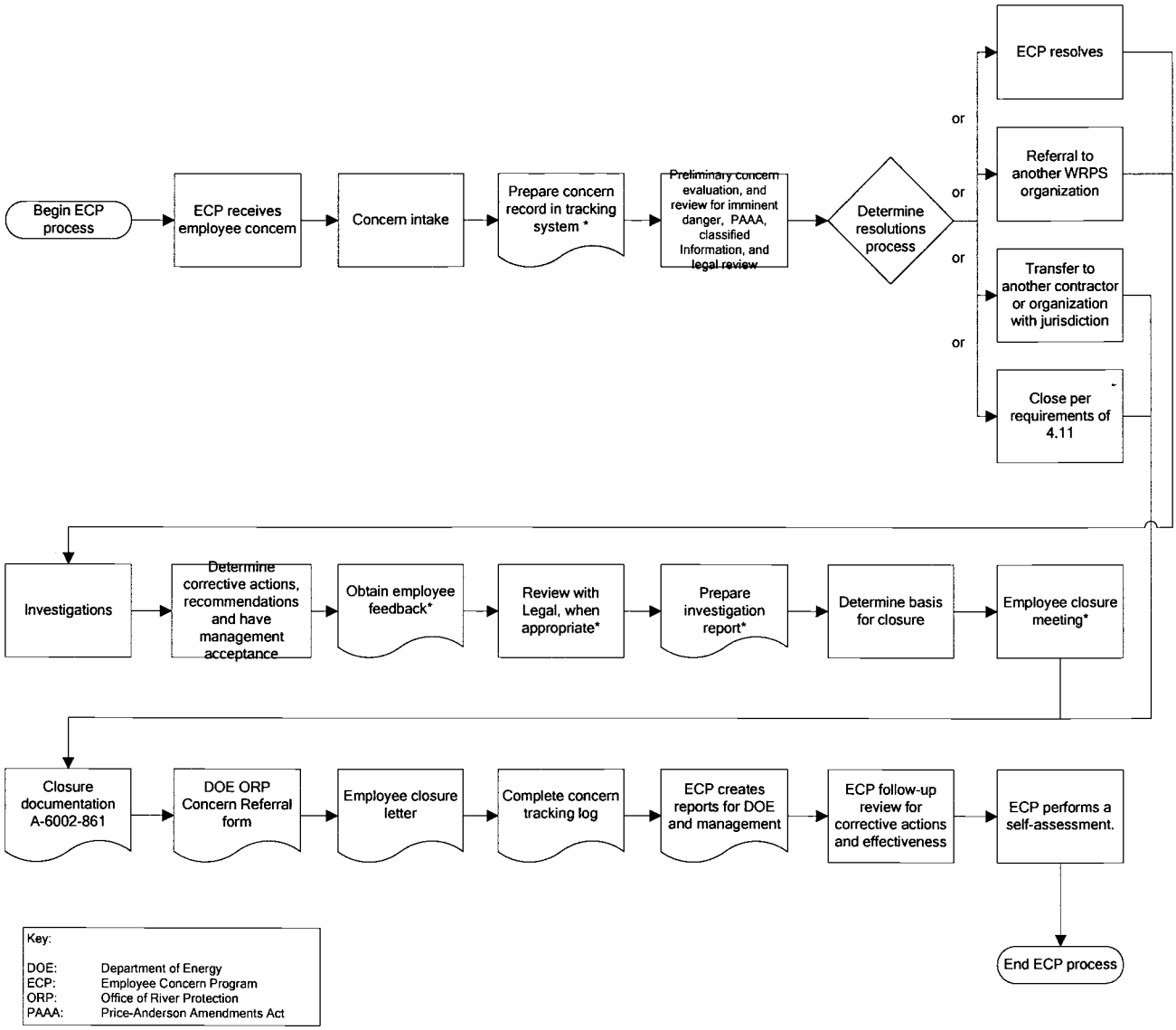

ATTACHMENT A – JOB DESCRIPTION FOR EMPLOYEE CONCERNS PROGRAM SPECIALIST

Charter/Role:

Responsible for administration and operation of the ECP for WRPS in compliance with applicable WRPS policies and procedures, DOE orders, and directives. Provide company and subcontractor employees with an independent and objective avenue for anonymous and confidential reporting, investigating, and resolving concerns related to safety, health, quality, security, environment, retaliation, chilling effect, ethics, waste, fraud, and abuse.

Responsibilities:

- Ensure that employee concerns are processed in accordance with DOE Order CRD 442.1A, Rev. 1, and followed through to resolution.
- Work with employees and managers to collect, evaluate, and communicate relevant information to the parties involved.
- Communicate with the originator of the concern to determine what action the originator would consider satisfactory to resolve the concern.
- Identify potential resolutions and obtain commitments from management, then communicat the information to the employee.
- Maintain an Employee Concerns Tracking Log and a secure filing system.
- Coordinate, with the appropriate company management, the concerns that are filed by their employees.
- Document referrals and transmittals of employee concerns and provide the concerned employee with this information. Referrals and transmittals will be tracked to closure in the Employee Concerns Tracking Log.
- Evaluate and attempt to resolve employee concerns in a manner that protects the health and safety of employees and the public, ensure effective and efficient operation of programs, and use alternative dispute resolution techniques whenever appropriate.
- Make every attempt to strike a balance between encouraging employees to use the ECP and taking concerns to their immediate managers/supervisors.
- Prepare quarterly and annual reports and review for lessons learned and possible adverse trends.
- Conduct self-assessments at least annually to measure the effectiveness of the ECP and take necessary actions to improve ECP operations.
- Coordinate with WRPS Procurement Services to ensure appropriate subcontract requirements for the availability and use of ECP and the means that will be used to evaluate the subcontractors' use of and notification to employees of ECP.

ATTACHMENT A – JOB DESCRIPTION FOR EMPLOYEE CONCERNS PROGRAM SPECIALIST (cont.)

- When seeking resolution to an open concern, the ECP Specialist may elevate the concern to the appropriate level of management.
- Conduct investigative fact finding, as appropriate, to resolve concerns and prepare reports of findings and conclusions.
- Prepare and conduct training sessions with employees, managers, and new hires, and make business presentations, when required.

Critical Interfaces:

The ECP Specialist communicates with concern submitters, WRPS executives and managers, subject matter experts, DOE and contractor ECP managers,subcontractor managers, Human Resources, labor organizations, attorneys, and others on a daily basis. Briefs the WRPS Project Manager and executive staff on program status, issues of significance, and employee concerns on a quarterly basis but more frequently, as necessary. Excellent written and verbal skills are essential.

The ECP Specialist communicates with concern submitters, WRPS executives and managers, subject matter experts, DOE and contractor ECP managers, Human Resources, subcontractor managers, labor organizations, attorneys, and others, as necessary, to ensure that concerns are identified, action plans to investigate concerns are developed and implemented, and recommendations to resolve concerns are developed and executed in a timely manner.

Qualifications:

Depth and Breadth of Knowledge Required to Perform the Job:

Must understand and comply with DOE ECP orders and directives, WRPS policies and procedures. Must have extensive knowledge of industry practices to plan and conduct effective investigations and inquire into concerns raised through the ECP. Must be an effective writter with the ability to clearly and concisely present information. Must have a working knowledge of employment law and DOE regulations related to employee protection in order to recognize and resolve related issues. Must be completely knowledgeable in the administration of ECP procedures in compliance with DOE Order 442.1A.

Specialized Education and Experience Requirements:

- Minimum of Bachelor's degree in Human Resources, Labor Relations, Engineering, Science, or Business with 10-15 years related experience or equivalent combination of education and experience.
- Demonstrated ability to properly identify and protect confidential and sensitive unclassified information with a high degree of personal ethics and integrity. Must have specialized training in the conduct of ECP investigations. Must have specialized training in mediation, or alternate dispute resolution.
- Must be computer literate and proficient in MS Word and the use of information database.

ATTACHMENT A – JOB DESCRIPTION FOR EMPLOYEE CONCERNS PROGRAM SPECIALIST (cont.)

Communication Skills Required:

Must possess strong verbal and written communication skills and be able to effectively communicate with concerned individuals, company staff, craft workers, management, executives, DOE staff, and regulators.

Problem Solving Skills Required:

Must be able to relate and compare data from different sources, identify concerns, secure relevant information, and identify relationships. Must be able to critically evaluate situations and make sound decisions based on all the facts. Must be able to gather information and extract information for decision making through oral fact finding or interviewing combined with effective listening.

Ownership matrix

TABLE OF CONTENTS

1.0 PURPOSE AND SCOPE 2
2.0 IMPLEMENTATION 2
3.0 RESPONSIBILITIES 2
4.0 PROCEDURE 2
- 4.1 Concern Identification and Raising an Employee Concern 2
- 4.2 Concern Intake 3
- 4.3 Preliminary Concern Evaluation Process 4
- 4.4 Concern Resolution Process (Concern Resolved by ECP or Referral) 5
- 4.5 Concern Resolution Process (Concern Transfer) 6
- 4.6 Concern Resolution Process (Concern Meets Criteria for Closure) 6
- 4.7 Employee Concerns Closure Meeting 6
- 4.8 Concern Investigation 7
- 4.9 Determine Recommendations and Corrective Actions 9
- 4.10 Basis for Closing Concerns 9
- 4.11 Concern Closure Documentation 10
- 4.12 Reporting 11
- 4.13 ECP and 24-hour Hotline Access 11
- 4.14 Employee Concern Tracking 12
- 4.15 Follow-up to Employee Concern Closure 13
- 4.16 Training 13
- 4.17 ECP Self-Assessment 13

5.0 DEFINITIONS 14
6.0 RECORDS 16
7.0 SOURCES 16
- 7.1 Requirements 16
- 7.2 References 17

TABLE OF FIGURES

Figure 1. Employee Concerns Program Flowchart. 18

TABLE OF ATTACHMENTS

ATTACHMENT A – JOB DESCRIPTION FOR EMPLOYEE CONCERNS PROGRAM SPECIALIST 19

1.0 PURPOSE AND SCOPE
(7.1.1.d, 7.1.1.b, 7.1.2)

This procedure establishes and documents the processes and methods of the Washington River Protection Solutions LLC (WRPS) Employee Concerns Program (ECP) for resolving concerns associated with the Hanford River Protection Project (RPP) submitted by WRPS employees and its subcontractors. This procedure also identifies the procedure for resolving employee concerns referred to WRPS by the Department of Energy (DOE) Office of River Protection (ORP).

The ECP shall provide a process to adequately and effectively investigate and respond to concerns dealing with safety, health, security, quality, environmental protection, business ethics, compliance with laws and regulations, fraud, abuse, mismanagement, wrong doing, physical working conditions, assertions of retaliation, hostile work environment, chilling effect and violations of the DOE Hanford Site Zero Tolerance for Retaliation Policy.

2.0 IMPLEMENTATION

This procedure is effective on the date shown in the header.

3.0 RESPONSIBILITIES

Responsibilities are contained within Section 4.0.

4.0 PROCEDURE

See Figure 1 for process flowchart.

4.1 Concern Identification and Raising an Employee Concern

Employee

1. Take concerns to immediate manager/supervisor, safety representative.

2. If you do not feel your concern is resolved appropriately by your manager/supervisor, or if you do not feel you can take your concern to your manager/supervisor, file your concern with the WRPS ECP or DOE ORP. (7.1.1.b)

3. Choose one of the following methods to report an employee concern to the WRPS ECP office:

   - Employee Concerns form (A-6002-861) (forms may be found in the WRPS ECP office and the Hanford Site WRPS intranet)
   - E-mail
   - Letter
   - Memorandum
   - Telephone
   - 24-hour hot line (373-5444).

4. Choose one of the following alternatives when reporting an employee concern to the WRPS ECP office.

   - Provide your name if you wish to be interviewed or contacted for questions and comments during the investigation.
   - If you want your concern handled confidentially, provide your name and indicate that you do not want your name revealed to anyone but the ECP.
   - Choose anonymity. You may choose anonymity but it would be a good idea to use a "code" name or number to identify yourself. This enables you to call the WRPS ECP office for updates and progress of the investigation while continuing to maintain anonymity.

Employee Concerns Specialist

5. Carry out these actions if DOE ORP receives concerns from employees and refers them to WRPS.

   a. Perform concern intake (Section 4.2), and

   b. Complete prioritization process for DOE SCO Referral Concerns (Section 4.3).

Management

6. Notify the ECP office if you learn of any concern that an employee wants addressed by the ECP.

Human Resources

7. Contact ECP or provide assistance for the employee to contact the ECP if you learn of any concern that an employee wants addressed during an exit interview.

4.2 Concern Intake

Employee Concerns Specialist

1. Contact the employee, if possible, to acknowledge receipt of the concern and to clarify issues.

2. Determine what action and communication, if any, the employee has already taken to resolve the concern.

3. Determine what action the employee considers satisfactory to resolve or correct the concern.

   NOTE: Employees are encouraged to first seek resolution with the first-line supervisors or through existing complaint or dispute resolution systems but have the right to report concerns through the WRPS ECP or the DOE ORP.

4. Inform the employee that (1) the investigation and evaluation of the concern will proceed as far as possible without his/her identity being known if confidentiality is requested, (2) WRPS management does not tolerate reprisal against or intimidation of employees who have reported concerns.

   NOTE: DOE Confidentiality Guidelines are found in DOE G 442.1-1, Reference 8.

5. Complete an Employee Concern form (A-6002-861). If the concern is anonymous and is received by telephone, request as much specific information about the concern as possible.

6. Assign a tracking number that can be used in all future references to the concern.

7. Share the tracking number with the individual reporting the confidential concern so he/she can refer to the tracking number when calling in for updated information.

8. Indicate the date that feedback is expected to be available, and ask the individual to call back on that date so anonymity can be maintained.

9. Document the conversation with the employee regarding the release of his/her identity and include the documentation in the concern file.

10. Record the concern on the Employee Concern form (A-6002-861) and attach the original media if the concern is submitted in a format other than the Employee Concern form.

11. Record the information in the Employee Concern Tracking Log and create a concern file.

12. Perform Preliminary Concern Evaluation (proceed to Section 4.3).

4.3 Preliminary Concern Evaluation Process

Employee Concerns Specialist

1. Review the concern for imminent danger or condition and stop work action (refer to TFC-POL-32).

   NOTE: Where imminent danger is present, the appropriate management must be notified immediately.

2. Review the concern and report any concerns that indicate a radiological safety, nuclear safety, safety basis or health concern to the Price-Anderson Amendments Act (PAAA) Event Program Lead for appropriate actions.

3. Review the concern for possible classified or sensitive unclassified information.

   a. If potentially classified or sensitive unclassified, take it to the appropriate authorized information specialist for sanitation.

4. Confer with the WRPS Legal counsel to determine the appropriate process to resolve the concern if the employee concern involves other potential legal issues such as alleged harassment, retaliation, discrimination, fraud, waste, abuse of government property, wrong doing, or violation of the law (Section 4.4).

5. Determine the appropriate process to resolve the concern from the following:

   a. Investigate, evaluate, and resolve through the ECP, in coordination with DOE or external offices, when required. Proceed to Section 4.4 and complete the procedure.

   b. Referral of the concern to another WRPS organization and tracked by the ECP until they are resolved. (e.g., Labor Relations, Human Resources, Legal). Proceed to Section 4.4 and complete the procedure.

   c. Transfer the concern to another WRPS organization, contractor, or subcontractor organization with jurisdiction over the issues. Proceed to Section 4.5 and complete the procedure.

   d. Close consistent with requirements in Section 4.10. Proceed to Section 4.6 and complete the procedure.

4.4 Concern Resolution Process (Concern Resolved by ECP or Referral)

Employee Concerns Specialist	1.	Attempt to resolve employee concerns in a manner that protects the health and safety of both employees and the public, ensure effective and efficient operation of programs, and use Alternate Dispute Resolution (ADR) techniques, whenever possible. (7.1.1.a, 7.1.1.e)
Investigator	2.	Complete any investigation(s) required to determine the facts associated with the employee concern (Section 4.8).
	3.	Update the employee on the concern resolution progress on a monthly basis.
	4.	Develop recommendations and corrective actions per Section 4.9 to resolve the employee concern.
Employee Concerns Specialist	5.	Determine when the concern can be closed based on the criteria described in Section 4.10.
Investigator	6.	Perform employee concerns closure meeting per Section 4.7.

7. Prepare employee concern closure documentation (Section 4.11).

8. Prepare and file the concern-related documents, reports, and forms in a locked and secure file cabinet with limited access.

9. Maintain a chronology for the concern case file.

Employee Concerns Specialist

10. Enter employee concern data in the ECP Tracking System (Section 4.14).

4.5 Concern Resolution Process (Concern Transfer)
(7.1.1.b.2)

Employee Concerns Specialist

1. Transfer the concern by memorandum or e-mail to another WRPS organization, contractor, or subcontractor organization with jurisdiction over the issues, when those issues are outside the scope of the ECP (e.g., DOE ORP, another Hanford contractor, EEO, Union).

2. Close the concern in accordance with the criteria described in Section 4.10.

3. Document the closure per Section 4.11, as appropriate.

4. Enter employee concern data in the ECP Tracking System (Section 4.14)

4.6 Concern Resolution Process (Concern Meets Criteria for Closure)
(7.1.1.e)

Employee Concerns Specialist

1. Close the concern in accordance with the criteria described in Section 4.10.

2. Document the closure per Section 4.11, as appropriate.

3. Enter employee concern data in the ECP Tracking System (Section 4.14).

4. Maintain a chronology for the concern case file.

4.7 Employee Concerns Closure Meeting

Investigator

1. Meet with the concerned individual, if possible. If a meeting is not practical or timely, communicate by phone and/or e-mail or letter.

2. Communicate the results of the employee concern to the employee.

3. Obtain the employee's comments during this meeting.

4. Attempt to resolve any comments made by the employee.

4.8 Concern Investigation

Investigator

1. Review the basic elements of the concern (maintaining employee confidentiality) and obtain a qualified subject matter expert to assist in the investigation of the concern, as appropriate.

2. Maintain interfaces with the following for the purpose of concern investigation and resolution:

   - DOE ORP
   - Hanford contractor ECP managers
   - Subcontractor programs
   - Subcontractor senior management
   - Human Resources
   - Labor organizations.

3. Develop a resolution/investigation plan and obtain the functional/ project manager's commitment for action.

   NOTE: Based on a need for an independent investigation, unless otherwise agreed to by the employee, the organizational element named in the concern should not be involved in the conduct or management of the investigation. Similarly, individuals or organizations outside the concerned employee's organization should not be selected to conduct the investigation where their involvement presents a conflict of interest.

4. Utilize, as appropriate, investigative guidelines and tools provided below:

   - A-6003-444, Line of Inquiry for Poor Performance Review or Evaluation
   - A-6003-445, Line of Inquiry for Discipline
   - A-6003-446, Line of Inquiry for Failure to Hire/Recall/ Rollover for Employment
   - A-6003-447, Line of Inquiry for Reduction In Force/"Lay Off"/ Involuntary Separation or Retirement
   - A-6003-448, Line of Inquiry for "Blacklisting" Case
   - A-6003-449, Line of Inquiry for Termination for Cause
   - A-6003-450, Line of Inquiry for Transfer/Demotion/Removal of Duties and/or Responsibilities
   - A-6003-451, Possible Adverse Actions.
   - A-6003-452, Chilling Effect Analysis
   - A-6003-453, Hostile Work Environment (HEW) Analysis
   - A-6003-454, Retaliation Analysis

5. Collect and evaluate relevant information, communicate between involved parties, and seek common ground for resolution.

   NOTE: Employees represented by a bargaining unit may request the presence of a steward during investigative interviews.

6. Maintain a chronology of the investigation.

7. Keep a file record of information obtained in a secured, locked filing system with limited and controlled access.

8. Notify the employee if the concern cannot be resolved within a month of original receipt. Follow up with the employee at least monthly.

9. Determine recommendations and corrective actions per Section 4.9.

10. Prepare an Employee Concerns Investigation Report that documents the following information:

    - Concern number and statement of concern
    - Executive summary
    - Investigation dates
    - Investigation report date
    - Subject matter expert who contributed to the investigation (name and title)
    - Investigator (name, title, signature)
    - Scope of investigation
    - Investigation details (include an explanation of attached documents such as investigative tools)
    - Corrective actions taken or planned (include Problem Evaluation Request (PER) number or other tacking numbers)

      NOTE: Confidential or personnel actions shall be tracked by number only and referenced to the concern number case file. No names or details of the specific actions taken shall be placed in the PER or corrective action tracking system.

    - Summary, conclusions with basis (state the concern was substantiated, partially substantiated, not substantiated, or indeterminate)
    - Corrective actions recommended (include tracking numbers)
    - Employee comments (indicate when the employee was contacted and briefed on the investigation results. Document any comments the employee had relative to the concern investigation/resolution and the corrective actions taken or planned)
    - Employees contacted (include names and titles)
    - References (formal documents supporting the investigation)
    - Attachments (e.g., statements, interview records, tools, significant e-mail, documents not available by reference, etc.).

11. Review reports of concerns for classified and sensitive unclassified information and, if necessary, sanitize by an authorized information or classification specialist.

4.9 Determine Recommendations and Corrective Actions

Investigator

1. Determine what actions the employee recommends to remedy or resolve the employee concern.

2. Work with management to determine, document, and initiate corrective actions that will resolve or remedy the employee concern.

3. Identify lessons learned and provide this information to appropriate organizations for consideration.

4. Document any deficiencies, conditions adverse to quality, and corrective actions in the appropriate corrective action tracking systems.

Management

5. Take prompt and effective action to correct deficiencies and initiate corrective actions to resolve employee concerns and prevent recurrence.

4.10 Basis for Closing Concerns

Employee Concerns Specialist

1. Close a concern when one of the following criteria is satisfied:

   - The concern has been investigated, necessary corrective actions have been identified, the organization responsible for taking the corrective action has accepted jurisdiction of the corrective actions, the corrective action is documented in an official WRPS corrective action tracking system as appropriate, and the resolution has been documented in the WRPS Employee Concern Tracking Log (7.1.1.e)

   - The concern has been investigated and no corrective action is deemed necessary (7.1.1.e)

   - The subject matter of the concern is outside the scope of the WRPS ECP, and the concern has been transferred to another organization with jurisdiction over the subject matter (7.1.1.e)

   - The concerned individual who raised the concern was advised that the concern is outside the scope of the WRPS ECP's available means to address the concern and direct transfer of the concern to another organization is not appropriate (7.1.1.e)

   - The concerns or issues lack sufficient detail for investigation (e.g., frivolous or too general) and the concerned individual has been notified that the concern is closed. (7.1.1.e)

4.11 Concern Closure Documentation
(7.1.1.g)

Employee Concerns Specialist

1. Complete the Employee Concern form (A-6002-861). The following shall be documented in the Basis For Closure field:

   - Conclusions with basis
   - Basis for closure
   - Actions that were or will be taken to address and/or correct the concerns, and problems (include corrective action tracking numbers)
   - Comments made by the employee after reviewing the investigative results, conclusions, and basis for concern closure.

   If the concern was transferred to another WRPS organization, contractor, or subcontractor, obtain the information from them along with appropriate signature of the investigator.

2. Review the investigative results and conclusions with the Legal department for employee concerns related to Harassment, Intimidation, Retaliation, and Discrimination (HIRD), violation of law, waste, wrong doing, fraud, and abuse.

3. Resolve all comments made by the Legal department prior to discussion with the employee and commence preparation of closure documentation and the DOE ORP Concern Referral Form.

4. Prepare and deliver a DOE ORP Concern Referral Form for employee concerns referred from DOE ORP.

5. Contact the employee and communicate the following:

   NOTE: Face-To-Face contact is preferred. A phone call or e-mail is an acceptable alternative. Send the employee a letter if other means are unsuccessful.

   - Summary of fact finding and conclusions with basis
   - Basis for closure
   - Actions that were or will be taken to address and/or correct the concerns, problems, and/or violations of codes or standards
   - Comments made by the employee after reviewing the investigative results, conclusions, and basis for concern closure.

6. Review completed concerns for value to other employees.

   NOTE: If appropriate, investigation results may be published as an information-sharing process; however, it is imperative to maintain confidentiality and anonymity of the employee who raised an anonymous concern.

Employee

7. Acknowledge, in writing, by return of the concern closure letter that you received the letter and that you consider the issue to be closed or provide comments to WRPS ECP.

8. If you are not satisfied with the adequacy or effectiveness of action taken by WRPS ECP regarding a safety concern, visit or call the DOE ORP or other offices with authority or responsibility for addressing the subject matter of the concern.

4.12 Reporting

Employee Concerns Specialist

1. Prepare periodic reports of significant issues, trends, concerns received, concerns closed, or remaining unresolved concerns to WRPS executives as appropriate.

2. Provide reports to the DOE ORP, as requested.

3. Provide the DOE ORP prompt notification of potentially high profile concerns, allegations of retaliation or harassment, and significant trends. (7.1.1.g)

4. Cooperate with DOE ORP actions, including requests for documentation or information involving employee concerns. (7.1.1.h)

5. Prepare a report of concerns for the PAAA Event Program Lead's review on a quarterly basis.

4.13 ECP and 24-hour Hotline Access

Employee Concerns Specialist

1. Maintain an ECP hotline with 24-hour access to the program. The phone number is (509-373-5444).

2. Maintain the WRPS ECP procedure on the WRPS intranet.

3. Provide new employees at orientation with an ECP brochure explaining the program.

4. Place and maintain ECP posters with the ECP 24-hour hotline number, which shall be placed in conspicuous locations at WRPS work areas.

5. Provide the Employee Concern form (A-6002-861) and this procedure to be accessible to employees on the WRPS intranet.

Prime Teaming Contract Administration

6. Inform subcontractor employees:

   - The ECP process/availability; employees are encouraged to first seek resolution with the first-line supervisors or through existing complaint or dispute resolution systems but have the right to report concerns through the contractor (WRPS) ECP or the DOE ORP.

   - About management's intolerance for reprisal against or intimidation of employees who have reported concerns.

4.14 Employee Concern Tracking

Employee Concerns Specialist

1. Maintain a secure (password protected) Employee Concern Tracking Log according to existing rules applicable to sensitive materials, as well as applicable privacy act requirements.

2. Include in the tracking log the following information:

   - Concern number
   - Date and time concern received
   - Method of receipt (e.g., walk-in, mail, hotline, telephone, etc.)
   - Category of concern (e.g., environmental, safety, health, etc.)
   - Brief description of concern
   - Whether the concern meets the criteria for an imminent danger
   - Whether the concern is a potential PAAA noncompliance. If yes, provide the PAAA evaluation referencing information
   - Whether the concern was transferred/referred to another organization or authority (date and organization)
   - Name of the investigator and organization
   - Whether the concern was substantiated, partial substantiated, not substantiated, or indeterminate
   - Disposition/resolution, including any corrective action(s) taken or anticipated (including tracking numbers)
   - Basis for closure
   - Date the employee was notified of the resolution
   - Date the concern was closed.

4.15 Follow-up to Employee Concern Closure

Management (appropriate office)

1. Periodically determine whether WRPS or its subcontractors have taken action to minimize, correct, or prevent recurrence of program, process, or management weakness identified and/or determined through the ECP.

ECP Specialist

2. Periodically review corrective actions related to employee concerns to determine the following:
   - Corrective measures have been completed
   - Actions taken were effective
   - Deficient conditions have not recurred
   - Appropriate organizations performed periodic reviews of concern resolution.

4.16 Training

Management

1. Ensure personnel responsible for implementing the WRPS ECP or investigating concerns are trained to properly carry out their responsibilities described in the ECP Specialist job description in Attachment A (e.g., training on the identification and classification of health and safety issues, PAAA, how to investigate workplace and administrative issues, and dispute resolution techniques).

4.17 ECP Self-Assessment
(7.1.1.f)

Employee Concerns Specialist

1. Perform a self-assessment (see TFC-ESHQ-AP-C-07) at least annually to measure the effectiveness of the ECP and the process used to implement these requirements.
2. Review concern case files to determine if the investigative methods and documentation are sufficiently detailed to permit investigation or other appropriate level of review.
3. Identify problems that hinder the ECP from achieving its objectives.

Management

4. Correct problems identified in the ECP self-assessment that hinder the ECP from achieving its objective.

ECP/Management

5. Cooperate with assessments used to verify that WRPS and its subcontractors have acted to minimize, correct, or prevent recurrence of the situation that precipitated a valid concern. (7.1.1.c)
6. Perform a concerned individual self-assessment at least annually to solicit feedback from ECP users and to measure the effectiveness of the ECP.

5.0 DEFINITIONS

Alternative dispute resolution (ADR). A variety of processes used to resolve disputes through use of a neutral third party in an attempt to avoid judicial or administrative litigation. Forms of alternative dispute resolution include mediation, partnering, ombudsman ship, neutral evaluation, non-binding arbitration, mini-trial, and binding arbitration (e.g., the Hanford Concern Council).

Chilling effect. An environment where employees do not feel free to raise concerns to the government; thus preventing the free flow of information regarding public safety and health.

Confidential. A concern submitted by an employee who wishes to have his or her identity protected from all persons except the ECP staff, or a concern submitted by an employee who wishes to have his or her identity protected from all persons except the ECP staff and those with a need to know.

Discrimination. An action of treating employees differently for a prohibited or illegal reason, e.g., gender, race, age, religious preference or national origin. Also included is treating someone differently because they raised a safety concern or engaged in legally protected activities.

Employee concern. A good faith expression by an employee that a policy or practice of DOE or one of its contractors or subcontractors should be improved, modified, or terminated. Concerns can address issues such as health, safety, the environment, management practices, fraud, waste, or reprisal for raising a concern.

Harassment. In the context of the ECP, an action taken or condoned by an employer against or toward an employee to bother, belittle, humiliate, or impede that employee in his or her work environment, relationship with others, or job performance because the employee reasonably and in good faith raised a concern. Harassing actions can include, but are not limited to, threatening, restraining, coercing, blacklisting, mocking, humiliating, or isolating an employee.

Imminent danger condition concern. Any activity or condition that places an employee, their co-workers, other contractors, the public, or the environment in danger.

Intimidation. Any action taken by coworker or supervisors against or toward an employee to cause that employee to cease engaging in protected activities; to be fearful of engaging in protected activities; or to otherwise be afraid for his or her safety, reputation, or job security as a result of having identified concerns about any aspect of DOE activities or operations.

Investigation. An inquiry conducted by or on behalf of the ECP for the purpose of evaluating and resolving a concern, usually involving interviews, inspection of relevant documents, sites, or equipment, and an evaluation of practices being followed.

Protected activities. Activities such as raising concerns or otherwise making disclosures protected under law, regulations, or legal precedent of information related to DOE operations, which the individual reasonably and in good faith believes is evidence of unsafe, unlawful, fraudulent, or wasteful practices.

Referral of a concern. Transmittal of an employee to another organization for investigation, with the results of the investigation being reported to the ECP within a specified time period with a resolution including corrective actions, if applicable.

Resolution of a concern. Actions taken and decisions made that respond to the concern by verifying the concern and establishing plans to correct identified deficiencies, correcting the

deficiencies, or determining that the concern is not substantiated and that no corrective action is required.

Reprisal/retaliation. Any action taken against an employee in response to, or in revenge for, the employee having raised, in good faith, reasonable concerns about any aspect of DOE-related operations. Reprisals against contractor employees may lead to the imposition of penalties under the Price Anderson Amendments Act of 1988 (Pub. L. 100-49, August 20, 1988), implemented by DOE under 10 CFR, Part 820 (Part 820). Pursuant to Part 820, to the extent a reprisal by a DOE contractor results from an employee's involvement in matters of nuclear safety in connection with a DOE nuclear activity, the reprisal could constitute a violation of a DOE nuclear safety requirement.

Safe work environment. A safe work environment, which is an important element of a good safety culture, is one in which employees feel free to raise concerns without fear of retaliation, regardless of whether it is to their own line management or to external regulators.

Sensitive Unclassified Information. Sensitive Unclassified Information does not define a specific set of restrictions. SUI is any information, regardless of its physical form or characteristics, which has been determined to have relative sensitivity, requires mandatory protection because of statutory or regulatory restrictions or for which disclosure, loss, misuse, alteration, or destruction could adversely affect national security, government, or private interests. National security interests are those unclassified matters that relate to the national defense or foreign relations for the U.S. government. Governmental interests are those related, but not limited, to the wide range of government or government-derived economic, human, financial, industrial, agricultural, technological, and law enforcement information, as well as privacy or confidentiality of personal or commercial proprietary information.

Transfer of a concern. Transmittal of a concern by the ECP office to an office with subject matter responsibility or expertise pursuant to which that office will address the concern with the concerned individual.

6.0 RECORDS

The following records are generated during the performance of this procedure:

Record Description	Vital Record Y/N	QA Record Y/N	QA Record Retention L/NP	NARA Retention Schedule	Other Retention Requirements	Records Custodian
Employee Concern Tracking Log	N	N	N/A	ADM-1.43a1	N/A	ECP Office
Employee Concern Investigation and Resolution Reports	N	N	N/A	ADM-1.43a1	N/A	ECP Office
Employee Concerns Reports	N	N	N/A	ADM-1.43a1	N/A	ECP Office
Management and ECP self-assessment results	N	N	N/A	ADM-1.43a1	N/A	ECP Office
Chronology of investigation	N	N	N/A	ADM-1.43a1	N/A	ECP Office
Completed forms (Employee, DOE Referral, etc.)	N	N	N/A	ADM-1.43a1	N/A	ECP Office

The identified record custodian is responsible for record retention in accordance with TFC-BSM-IRM_DC-C-02.

7.0 SOURCES

7.1 Requirements

1. DOE Order 442.1A (Supplemented Rev), "Department of Energy Employee Concerns Program."
   a. Section A - Headquarters CRD, 1st bullet.
   b. Section A - Headquarters CRD, 2nd bullet.
   c. Section A - Headquarters CRD, 3rd bullet.
   d. Section C - Supplemental Requirements, General Supplemental Requirements, Item 1.
   e. Section C - Supplemental Requirements, General Supplemental Requirements, Item 2.
   f. Section C - Supplemental Requirements, General Supplemental Requirements, Item 3.
   g. Section C - Supplemental Requirements, General Supplemental Requirements, Item 4.
   h. Section C - Supplemental Requirements, General Supplemental Requirements, Item 5.

2. RPP-MP-003, "Integrated Environment, Safety, and Health Management System Description for the Tank Operations Contractor."

7.2 References

1. 10 CFR 708, "DOE Contractor Employee Protection Program."
2. DOE G 442.1-1, "Department of Energy Employee Concerns Program Guide," 2-02-99.
3. DOE Hanford Site "Zero Tolerance for Retaliation Policy."
4. Price-Anderson Amendments Act (PAAA) of 1988.
5. TFC-BSM-IRM_DC-C-02, "Records Management."
6. TFC-BSM-HR_DD-C-01, "Equal Employment Opportunity/Affirmative Action."
7. TFC-ESHQ-AP-C-07, "Specialty Assessment."
8. TFC-ESHQ-PAAA-C-01, "Price-Anderson Amendments Act Evaluation and Reporting."
9. TFC-ESHQ-Q_C-C-01, "Problem Evaluation Request."
10. TFC-POL-32, "Stop Work Responsibility."

Figure 1. Employee Concerns Program Flowchart.

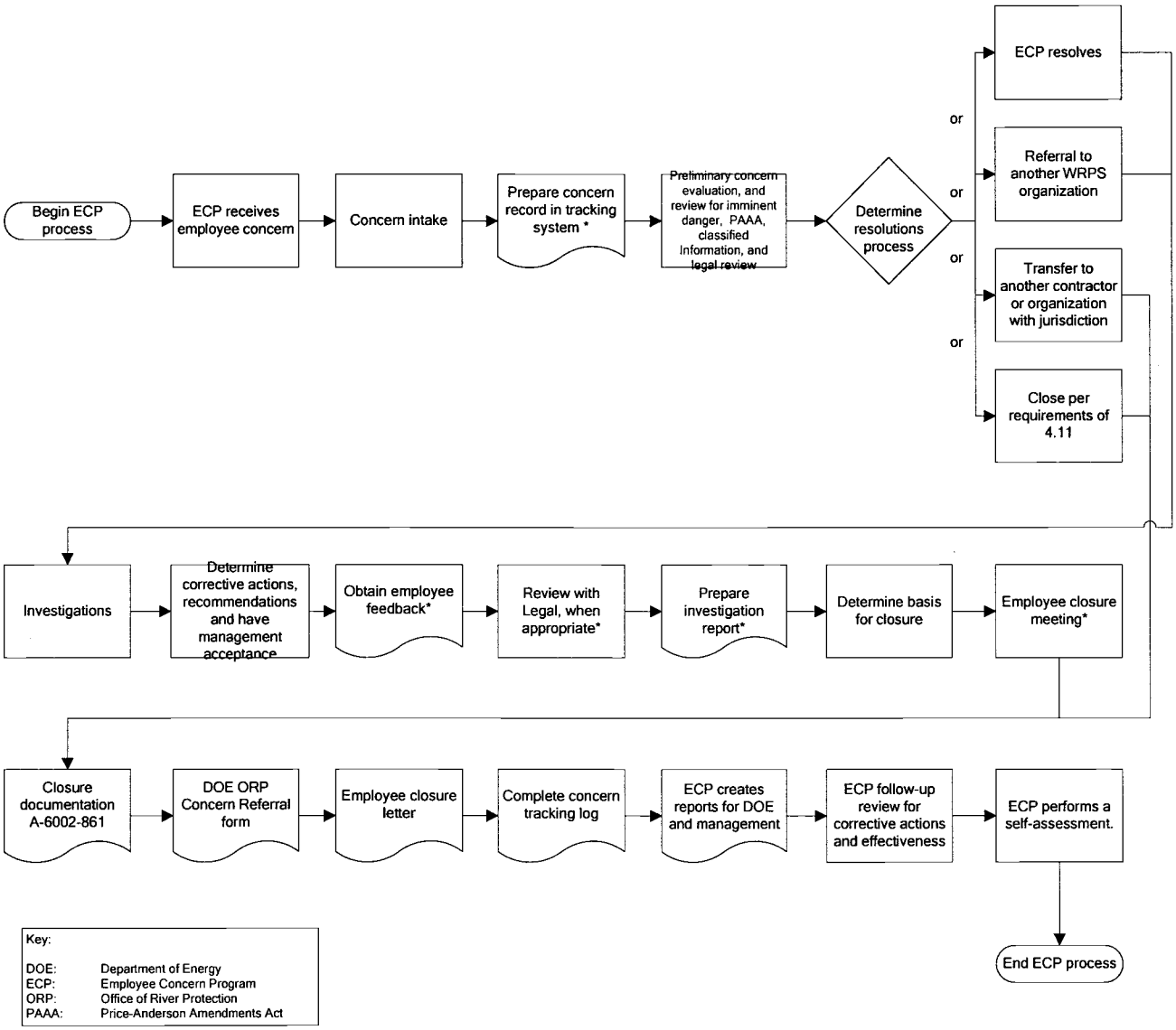

ATTACHMENT A – JOB DESCRIPTION FOR EMPLOYEE CONCERNS PROGRAM SPECIALIST

Charter/Role:

Responsible for administration and operation of the ECP for WRPS in compliance with applicable WRPS policies and procedures, DOE orders, and directives. Provide company and subcontractor employees with an independent and objective avenue for anonymous and confidential reporting, investigating, and resolving concerns related to safety, health, quality, security, environment, retaliation, chilling effect, ethics, waste, fraud, and abuse.

Responsibilities:

- Ensure that employee concerns are processed in accordance with DOE Order CRD 442.1A, Rev. 1, and followed through to resolution.
- Work with employees and managers to collect, evaluate, and communicate relevant information to the parties involved.
- Communicate with the originator of the concern to determine what action the originator would consider satisfactory to resolve the concern.
- Identify potential resolutions and obtain commitments from management, then communicat the information to the employee.
- Maintain an Employee Concerns Tracking Log and a secure filing system.
- Coordinate, with the appropriate company management, the concerns that are filed by their employees.
- Document referrals and transmittals of employee concerns and provide the concerned employee with this information. Referrals and transmittals will be tracked to closure in the Employee Concerns Tracking Log.
- Evaluate and attempt to resolve employee concerns in a manner that protects the health and safety of employees and the public, ensure effective and efficient operation of programs, and use alternative dispute resolution techniques whenever appropriate.
- Make every attempt to strike a balance between encouraging employees to use the ECP and taking concerns to their immediate managers/supervisors.
- Prepare quarterly and annual reports and review for lessons learned and possible adverse trends.
- Conduct self-assessments at least annually to measure the effectiveness of the ECP and take necessary actions to improve ECP operations.
- Coordinate with WRPS Procurement Services to ensure appropriate subcontract requirements for the availability and use of ECP and the means that will be used to evaluate the subcontractors' use of and notification to employees of ECP.

ATTACHMENT A – JOB DESCRIPTION FOR EMPLOYEE CONCERNS PROGRAM SPECIALIST (cont.)

- When seeking resolution to an open concern, the ECP Specialist may elevate the concern to the appropriate level of management.
- Conduct investigative fact finding, as appropriate, to resolve concerns and prepare reports of findings and conclusions.
- Prepare and conduct training sessions with employees, managers, and new hires, and make business presentations, when required.

Critical Interfaces:

The ECP Specialist communicates with concern submitters, WRPS executives and managers, subject matter experts, DOE and contractor ECP managers,subcontractor managers, Human Resources, labor organizations, attorneys, and others on a daily basis. Briefs the WRPS Project Manager and executive staff on program status, issues of significance, and employee concerns on a quarterly basis but more frequently, as necessary. Excellent written and verbal skills are essential.

The ECP Specialist communicates with concern submitters, WRPS executives and managers, subject matter experts, DOE and contractor ECP managers, Human Resources, subcontractor managers, labor organizations, attorneys, and others, as necessary, to ensure that concerns are identified, action plans to investigate concerns are developed and implemented, and recommendations to resolve concerns are developed and executed in a timely manner.

Qualifications:

Depth and Breadth of Knowledge Required to Perform the Job:

Must understand and comply with DOE ECP orders and directives, WRPS policies and procedures. Must have extensive knowledge of industry practices to plan and conduct effective investigations and inquire into concerns raised through the ECP. Must be an effective writter with the ability to clearly and concisely present information. Must have a working knowledge of employment law and DOE regulations related to employee protection in order to recognize and resolve related issues. Must be completely knowledgeable in the administration of ECP procedures in compliance with DOE Order 442.1A.

Specialized Education and Experience Requirements:

- Minimum of Bachelor's degree in Human Resources, Labor Relations, Engineering, Science, or Business with 10-15 years related experience or equivalent combination of education and experience.
- Demonstrated ability to properly identify and protect confidential and sensitive unclassified information with a high degree of personal ethics and integrity. Must have specialized training in the conduct of ECP investigations. Must have specialized training in mediation, or alternate dispute resolution.
- Must be computer literate and proficient in MS Word and the use of information database.

ATTACHMENT A – JOB DESCRIPTION FOR EMPLOYEE CONCERNS PROGRAM SPECIALIST (cont.)

Communication Skills Required:

Must possess strong verbal and written communication skills and be able to effectively communicate with concerned individuals, company staff, craft workers, management, executives, DOE staff, and regulators.

Problem Solving Skills Required:

Must be able to relate and compare data from different sources, identify concerns, secure relevant information, and identify relationships. Must be able to critically evaluate situations and make sound decisions based on all the facts. Must be able to gather information and extract information for decision making through oral fact finding or interviewing combined with effective listening.

Save

Problem Evaluation Request (PER)

WRPS-PER-2009-0718
In Process/Work

PER No	Date of Discovery	Time of Discovery (24:00)	Project
WRPS-PER-2009-0718	04/20/2009	16:00	ATS/222-S

Location

222S

How Was Problem Discovered

Assessment

Description of Concern or Problem

Procedure ATS-LO-150-063, Attachment E, says 'The chemical management POC and quality assurance personnel will evaluate chemical vendors or manufacturers prior to that vendor being included on the Approved Chemical Supplier List maintained by the chemical management POC.'

This statement (and other language in the procedure) implies that the WRPS Chemical Management POC will evaluate vendors and maintain the list. However, evaluation of vendors and maintenance of the list is actually performed by ATL under WRPS contract 177794, Release 30, Rev. 0, (10/1/08). The ATL Chemical Management POC uses ATL procedure LO-150-063, Attachment M, to maintain the list.

According to 222-S Laboratory Management, the WRPS Chemical Management POC retains authority and responsibility for maintaining the ASL. However, the WRPS Chemical Management POC was unaware of this responsibility.

Requirement Not Satisfied	Source Document Number

Equipment Identification Number	System Identification
N/A	Not Applicable

Immediate actions Taken or Planned

Discussed with 222-S Laboratory management.

Recommended Corrective actions

The WRPS procedure cited above should be revised to clarify the roles and responsibilities of the WRPS Chemical Management POC regarding the ASL. If the plan is to use ATL to perform some of the WRPS POC responsibilities, the procedure should specify this or specifically allow it.

I recommend this PER be assigned as a TUF to Duane Renberger.

Originator Contact

I would like to help define the problem

Originators Name	Originators ID	Originators Phone	Date Initiated
Jewett, James R	H0070487	(509) 373-9933	04/21/2009

SHIFT OPERATIONS REVIEW

Title

Clarify Roles and Responsibilities of the WRPS Chemical Management POC regarding the ASL.

How Discovered	Agency
self-ID prior to event	

Reportability	SSC Operability	Operability Review	Comp Measures Req
Non-Reportable	N/A	N/A	

Describe actions Taken or Recommended

No additional actions recommended.

SO Reviewer Name	SO Reviewer ID	SO Reviewer Phone	SO Review Date
Brey, Steve L	H0062556	(509) 373-2960	04/21/2009

SCREENING

PER Significance Level	
TUF	

Independent Assessment Review	Occurrence Report Number	Externally Identified	
No		No	
Assigned Responsible Manager	**Facilities Rep / SSO**	**Safety Management Rep**	
Renberger, Duane L			
Program		**Safety Management Program**	
• N/A		• Quality Assurance	
PER Screening Comments			
No comments (Nancy Brown 04/22/09)			
Causal Code			
MGT/Comm/Train	**Human Performance**	**GEMS**	**Equip/Eng/Other**
Failed Barrier	**ORPS Code**	**Functional Area**	**Work Process**
	Not Applicable	Analytical Chemistry	• Procedures: Implementation, Compliance • Requirements Management
ISMS	**Consequence Code**		
Define scope of work	• Communications - Inadequate communications, roles, responsibilities • Procedure - Administrative - Procedure ambiguous, in error, could not be worked, was not used		
PER Screening Chair	**PER Screening Chair ID**	**PER Screening Chair Phone**	**PER Screening Date**
Brown, Nancy L	H0088797	(509) 373-0992	04/22/2009
PAAA REVIEW			
PAAA Screening	**PAAA Codes**	**Function Codes**	
Not subject to PAAA			
NTS Report Number	**NTS Report Date**		
Repetitive / Recurrent	**Programmatic**	**Intentional Violation / Misrepresentation**	
No	No	No	
PAAA Screening Comments			
PAAA Reviewer Name	**PAAA Review Date**		
Anderson, Craig E	04/23/2009		
PAAA Approver Name	**PAAA Approve Date**		
Anderson, Craig E	04/23/2009		
SENIOR MANAGEMENT REVIEW/CONCURRENCE			
TF Operations Morning Leadership Call			
N/A			
Instructions for Responsible Manager			
Review the PER and determine action required. Complete action and enter statement on TUF tab. 'Complete' the task in E-STARS in accordance with TFC-ESHQ-Q_C-C-01, Problem Evaluation Request.			
Senior Management	**Sr Mgmt ID**	**Sr Mgmt Phone**	**Sr Mgmt Review Date**

Brown, Nancy L	H0088797	(509) 373-0992	04/23/2009
Track Until Fixed (TUF)			
Action Taken			
ATTACHMENTS			
Link to PER			
WRPS-PER-2009-0718_Path.msg			
AUDIT HISTORY			
Change Date	**Auditor**	**Comments**	
04/22/2009 14:33	Brown, Nancy L	'Description of Concern or Problem' was changed -- removed double quotes.	
04/23/2009 10:21	Brown, Nancy L	Responsible Manager Task Launched by Brown, Nancy L	

-- End of Report --
07/09/2009 03:16 PM

Task# WRPS-PER-2009-0718

E-STARS[R] Report
Task Detail Report
07/09/2009 1533

TASK INFORMATION			
Task#	WRPS-PER-2009-0718		
Subject	TUF; Clarify Roles and Responsibilities of the WRPS Chemical Management POC regarding the ASL.		
Parent Task#		**Status**	Open
Reference		**Due**	08/23/2009
Originator	^PER Coordinator	**Priority**	Medium
Originator Phone		**Category**	PER
Origination Date	04/21/2009 0942	**Generic1**	None
Remote Task#		**Generic2**	None
Deliverable	PER Review	**Generic3**	None
Class	None	**View Permissions**	Global
Instructions	*No Instructions*		

ROUTING LISTS

1	Responsible Manager	Active
	Review the PER and determine action required. Complete action and enter statement on TUF tab. 'Complete' the task in E-STARS in accordance with TFC-ESHQ-Q_C-C-01, Problem Evaluation Request.	
	• Renberger, Duane L - Assign - Completed with comments - 05/20/2009 0845 *Instructions:* ↳ *Routing List:* Spadoni - Inactive *Instructions:* Discuss situation with Assignor to define path forward • Spadoni, Tina - Assign - Completed with comments - 05/20/2009 0837 • Spadoni, Tina - Assign - Withdrawn - 05/12/2009 1200	
	• Renberger, Duane L - Assign - Awaiting Response - Due Date - 08/19/2009 1630 *Instructions:* Did you contact the originator about the PER? Document your contact in the response window.	
	• Renberger, Duane L - Close - Withdrawn - 04/23/2009 1048 *Instructions:* Verify the TUF Tab and close the task when complete	
2	Review Initial PER	Inactive
	Review New PER	
	• ^SO(Brey, Steve L) - Review - Concur - 04/21/2009 1628 *Instructions:*	
	• ^PER Screening(Brown, Nancy L) - Review - Concur - 04/22/2009 1437 *Instructions:*	
	• ^Mgr Review - Review - Cancelled - 04/23/2009 1021 *Instructions:*	

ATTACHMENTS

Attachments	1. Link to PER 2. WRPS-PER-2009-0718_Path.msg

COMMENTS

Task# WRPS-PER-2009-0718

Poster	Spadoni, Tina - 05/20/2009 0837
	Completed
	The confusion regarding roles and responsibilities is directly related to a decision in 2008 to split a single "jointly owned" Chemical Management procedure into separate but corresponding procedures (ATS-LO-150-063 and LO-150-063). Much of the chemical management process is divided more along the lines of laboratory-use (29 CFR 1910.1450) versus general-use (29 CFR 1910.1200). Rather than address revision of ATS-LO-150-63, the two chemical management procedures should be re-merged into a single jointly owned procedure. This process should be carried out with the assistance of a broad user base including ATL scientific staff and WRPS scientific and operational staff. See the attached Email (WRPS-PER-2009-0718_Path.msg) for additional detail and the concurrence of the Assignor with this path forward.This action is closed.
Poster	Renberger, Duane L - 05/20/2009 0845
	Completed
	Path forward to resolve question is provided in attachment and has been approved. Duane Renberger

TASK DUE DATE HISTORY

Modified	04/23/2009 1021 - ^PER Coordinator	**New Due Date**	08/19/2009 1630
Modified	04/23/2009 1021 - ^PER Coordinator	**New Due Date**	08/23/2009 1630
Modified	04/21/2009 0942 - ^PER Coordinator	**New Due Date**	04/23/2009 1630

SUB TASK HISTORY

No Subtasks

-- end of report --

Message

From: Renberger, Duane L
Sent: Tuesday, May 19, 2009 4:17 PM
To: Spadoni, Christina M
Subject: RE: DUE TOMORROW - ESTARS Action: WRPS-PER-2009-0718

Agree

From: Spadoni, Christina M
Sent: Tuesday, May 19, 2009 3:59 PM
To: Renberger, Duane L
Subject: DUE TOMORROW - ESTARS Action: WRPS-PER-2009-0718
Importance: High

Duane,
My ESTARS action, to "define a path forward," is due tomorrow (extended from 5/12). Please let me know if you concur with this recommendation or if you would like to see a different plan of action.

Tina Spadoni
PH: 373-0998
Cell: 308-1097

From: Spadoni, Christina M
Sent: Monday, May 11, 2009 4:56 PM
To: Renberger, Duane L
Subject: RE: ESTARS Action: WRPS-PER-2009-0718

Duane,

Regarding **WRPS-PER-2009-0718, Clarify Roles and Responsibilities of the WRPS Chemical Management POC regarding the ASL,** the directed action is to "Discuss situation with Assignor to define path forward." Here is a synopsis of our discussion.

As stated in the PER,

Procedure ATS-LO-150-063, Attachment E, says 'The chemical management POC and quality assurance personnel will evaluate chemical vendors or manufacturers prior to that vendor being included on the Approved Chemical Supplier List maintained by the chemical management POC.'

This statement (and other language in the procedure) implies that the WRPS Chemical Management POC will evaluate vendors and maintain the list. However, evaluation of vendors and maintenance of the list is actually performed by ATL under WRPS contract 177794, Release 30, Rev. 0, (10/1/08). The ATL Chemical Management POC uses ATL procedure LO-150-063, Attachment M, to maintain the list.

According to 222-S Laboratory Management, the WRPS Chemical Management POC retains authority and responsibility for maintaining the ASL. However, the WRPS Chemical Management POC was unaware of this responsibility.

To address the recommended action for this PER, the actual text of PER recommended action is in **black** while the response is in **blue**:.

The WRPS procedure cited above should be revised to clarify the roles and responsibilities of the WRPS Chemical Management POC regarding the ASL. If the plan is to use ATL to perform some of the WRPS POC responsibilities, the procedure should specify this or specifically allow it.

The confusion regarding roles and responsibilities is directly related to a decision in 2008 to split a single "jointly owned" Chemical Management procedure into separate but corresponding procedures (ATS-LO-150-063 and LO-150-063). ATL (using TFMSS), coordinates procurement and management of all laboratory-chemicals some of which are jointly used by both ATL and WRPS 222-S Laboratory staff. Much of the chemical management process is divided more along the lines of laboratory-use (29 CFR 1910.1450) versus general-use (29 CFR 1910.1200).

My recommendation is that rather than address revision of ATS-LO-150-63, the two chemical management procedures be re-merged into a single jointly owned procedure. I suggest that this be carried out with the assistance of a broad user base including ATL scientific staff and WRPS scientific and operational staff.

Please let me know if you concur with this recommendation or if you would like to see a different plan of action.

Tina Spadoni

WRPS Chemical Management / 222S Training
PH: 373-0998
FAX: 372-1616
Cell: 308-1097
cm_spadoni@rl.gov

Save

Problem Evaluation Request (PER)

WRPS-PER-2009-0725
In Process/Work

PER No	Date of Discovery	Time of Discovery (24:00)	Project
WRPS-PER-2009-0725	04/21/2009	13:00	C Farm-RC

Location

C Farm

How Was Problem Discovered

DOE FAC REP

Description of Concern or Problem

A review of the ORP Facility Representative's weekly report dated April 13, 2009 indicated the following weakness:

OBSERVATION: IMPROVEMENT IN EMERGENCY RESPONSE ACCESS AT C-FARM IS WARRANTED (Frink, 4/18/09)

Discussion:
During field oversight of the C-Farm construction work, it came to the Facility Representative's attention that personnel that are not associated with the construction activities frequently park vehicles in front and near the Middle C change trailer. It is important, especially in light of the high-risk work on going in C-Farm that access to the change trailer and vehicle gates remain clear to permit immediate access should the need arise.
Issue Number: 5862

A review of the PER database indicated that this specific issue had not been previously identified.

Requirement Not Satisfied	Source Document Number

Equipment Identification Number	System Identification

Immediate actions Taken or Planned

Wrote this PER.

Recommended Corrective actions

1. Discuss PER Significance (i.e., PICIM, TUF, Trend, etc) with the ORP Facility Representative.
2. Resolve to ORP's satisfaction.

Originator Contact

No

Originators Name	Originators ID	Originators Phone	Date Initiated
Hanson, Gregory N	H0078707	(509) 376-2182	04/21/2009

SHIFT OPERATIONS REVIEW

Title

IMPROVEMENT IN EMERGENCY RESPONSE ACCESS AT C-FARM IS WARRANTED as written in ORP weekly report

How Discovered	Agency
FACREP Surveillance	

Reportability	SSC Operability	Operability Review	Comp Measures Req
Non-Reportable	N/A	N/A	

Describe actions Taken or Recommended

recommend notifying C farm Construction management of concern.

SO Reviewer Name	SO Reviewer ID	SO Reviewer Phone	SO Review Date
Anderson, Rick A	H0013282	(509) 373-2689	04/22/2009

SCREENING

PER Significance Level	
PIE/CIM	

Independent Assessment Review	Occurrence Report Number	Externally Identified	
No		Yes	
Assigned Responsible Manager	**Facilities Rep / SSO**	**Safety Management Rep**	
Lesko, Karen F			
Program		**Safety Management Program**	
• N/A		• ^N/A^	

PER Screening Comments

cc: Karen Lesko
(Nancy Brown 04/22/09)

RE-QUEST FOR RE-SCREEN (Prior to Launch): 725 needs to go to Peggy Hamilton and cc Cato. It references construction vehicles parking in front of the farm entrances. Peggy has already discussed with her people I believe but this PER needs to be hers to close on how she is handling the parking issues for C farm construction.
(Dave Brown 04/22/090)

RE-SCREEN COMMENTS: Change from Dave Brown to Karen Lesko.
cc: Joe Cato, Dave Brown, Peggy Hamilton
(Nancy Brown 04/23/09)

Causal Code

MGT/Comm/Train	**Human Performance**	**GEMS**	**Equip/Eng/Other**
Failed Barrier	**ORPS Code**	**Functional Area**	**Work Process**
	Not Applicable	Operations	• Control Area Activities
ISMS	**Consequence Code**		
Provide feedback and continuous improvement	• Safety Concerns - Safety concerns, suggestions, and potential safety issues		
PER Screening Chair	**PER Screening Chair ID**	**PER Screening Chair Phone**	**PER Screening Date**
Brown, Nancy L	H0088797	(509) 373-0992	04/22/2009

PAAA REVIEW

PAAA Screening	PAAA Codes	Function Codes	
Not subject to PAAA			
NTS Report Number	**NTS Report Date**		
Repetitive / Recurrent	**Programmatic**	**Intentional Violation / Misrepresentation**	
No	No	No	

PAAA Screening Comments

PAAA Reviewer Name	**PAAA Review Date**	
Anderson, Craig E	04/22/2009	
PAAA Approver Name	**PAAA Approve Date**	
Anderson, Craig E	04/23/2009	

SENIOR MANAGEMENT REVIEW/CONCURRENCE

TF Operations Morning Leadership Call

N/A

Instructions for Responsible Manager

Evaluate suggestion, enter comments and required actions on PIE/CIM tab of the PER. Disposition in accordance with TFC-ESHQ-Q_C-C-01, Problem Evaluation Request.

Senior Management	Sr Mgmt ID	Sr Mgmt Phone	Sr Mgmt Review Date
Brown, Nancy L	H0088797	(509) 373-0992	04/24/2009

CAUSE ANALYSIS

Description of Occurrence

Extent of Condition

Safety Significance

Generic Implications

Remedial Corrective Action

Causal Analysis, Apparent Cause and/or Root Cause Analysis

CORRECTIVE ACTIONS

Actionee	Action Due Date	E-STARS Number
Lesko, Karen F	07/24/2009	WRPS-PER-2009-0725.1

Action

Develop corrective action plan for C-Farm emergency egress and assign actions.

Corrective Action Attachments

PIE/CIM

Evaluation of PIE/CIM Initiative

Personnel that are not associated with the construction activities frequently park vehicles in front and near the Middle C change trailer. It is important, especially in light of the high-risk work on going in C-Farm that access to the change trailer and vehicle gates remain clear to permit immediate access should the need arise. Discussion with personnel who work in this area have identified that it is not a single group that is causing an egress proble, but a number of people from different groups. Corrective actions including communication and monitoring of the area will be initiated to address the situation.

ATTACHMENTS

Link to PER

AUDIT HISTORY

Change Date	Auditor	Comments
04/22/2009 16:16	Brown, Nancy L	'PER Screening Comments' was changed.
04/23/2009 14:15	Brown, Nancy L	'Assigned Responsible Manager' was changed. 'PER Screening Comments' was changed.
04/24/2009 08:11	Brown, Nancy L	Responsible Manager Task Launched by Brown, Nancy L
07/08/2009 10:42	Glaman, Linda R	Change to Cause Analysis screen/Corrective Action plan.
07/08/2009 10:47	Glaman, Linda R	Corrective actions Launched by Glaman, Linda R

-- End of Report --
07/09/2009 03:29 PM

Task# WRPS-PER-2009-0725

E-STARS[R] Report
Task Detail Report
07/09/2009 1529

TASK INFORMATION			
Task#	WRPS-PER-2009-0725		
Subject	PIE; IMPROVEMENT IN EMERGENCY RESPONSE ACCESS AT C-FARM IS WARRANTED as written in ORP weekly report		
Parent Task#		**Status**	Open
Reference		**Due**	08/07/2009
Originator	^PER Coordinator	**Priority**	Medium
Originator Phone		**Category**	PER
Origination Date	04/21/2009 1341	**Generic1**	None
Remote Task#		**Generic2**	None
Deliverable	PER Review	**Generic3**	None
Class	None	**View Permissions**	Global
Instructions	*No Instructions*		

ROUTING LISTS

1	Corrective actions Routing Lis	Active
	To launch Corrective actions.	
	• ^PER CAs - Assign - Awaiting Response - Due Date - 08/03/2009 0000 *Instructions:*	
2	Responsible Manager	Inactive
	Evaluate suggestion, enter comments and required actions on PIE/CIM tab of the PER. Disposition in accordance with TFC-ESHQ-Q_C-C-01, Problem Evaluation Request.	
	• Lesko, Karen F - Assign - Completed with comments - 06/19/2009 1230 *Instructions:* ↳ *Routing List:* Route List - Inactive *Instructions:* • Farner, Monte - Assign - Cancelled - 06/19/2009 1229	
3	Review Initial PER	Inactive
	Review New PER	
	• ^SO(Anderson, Rick A) - Review - Concur - 04/22/2009 0458 *Instructions:*	
	• ^PER Screening(Brown, Nancy L) - Review - Concur - 04/22/2009 1500 *Instructions:*	
	• ^Mgr Review - Review - Withdrawn - 04/22/2009 1617 *Instructions:*	
	• ^PER Screening(Brown, Nancy L) - Review - Concur - 04/23/2009 1415 *Instructions:*	
	• ^Mgr Review - Review - Cancelled - 04/24/2009 0811 *Instructions:*	

ATTACHMENTS

Attachments	1. Link to PER

Task# WRPS-PER-2009-0725

COMMENTS					
Poster	Lesko, Karen F - 06/19/2009 1230				
	Completed				
	An action has been assigned in the PER. KFL				
TASK DUE DATE HISTORY					
Modified	07/08/2009 1047 - ^PER Coordinator			**New Due Date**	08/07/2009 0000
Modified	07/08/2009 1047 - ^PER Coordinator			**New Due Date**	08/03/2009 0000
Modified	04/24/2009 0811 - ^PER Coordinator			**New Due Date**	06/20/2009 1630
Modified	04/24/2009 0811 - ^PER Coordinator			**New Due Date**	06/20/2009 1630
Modified	04/21/2009 1341 - ^PER Coordinator			**New Due Date**	04/23/2009 1630
SUB TASK HISTORY					
Subtask#	WRPS-PER-2009-0725.1				
Subject	WRPS-PER-2009-0725; PIE; Develop corrective action plan for C-Farm emergency egress and assign actions.				
Originator	^PER CAs				
	Routing List	Corrective Action			
		Assignee	Lesko, Karen F	**Response**	

-- end of report --

Task# WRPS-PER-2009-0725.1

E-STARS[R] Report
Task Detail Report
07/09/2009 1529

TASK INFORMATION			
Task#	WRPS-PER-2009-0725.1		
Subject	WRPS-PER-2009-0725; PIE; Develop corrective action plan for C-Farm emergency egress and assign actions.		
Parent Task#	WRPS-PER-2009-0725	**Status**	Open
Reference	WRPS-PER-2009-0725	**Due**	07/30/2009
Originator	^PER CAs	**Priority**	Medium
Originator Phone		**Category**	PER
Origination Date	07/08/2009 1047	**Generic1**	None
Remote Task#		**Generic2**	None
Deliverable	PER Review	**Generic3**	None
Class	None	**View Permissions**	Global
Instructions	*No Instructions*		

ROUTING LISTS		
1	Corrective Action	Active
	Develop corrective action plan for C-Farm emergency egress and assign actions. RESPONSIBLE MANAGER: When this corrective action is complete, enter a closure statement in E-STARS and close the E-STARS subtask. Refer to the Problem Evaluation Request procedure TFC-ESHQ-Q-C-C-01, Section 4.4 for closure documentation requirements	
	• Lesko, Karen F - Assign - Awaiting Response - Due Date - 07/24/2009 0000 *Instructions:*	

ATTACHMENTS	
Attachments	1. Link to PER

COMMENTS

No Comments

TASK DUE DATE HISTORY			
Modified	07/08/2009 1047 - ^PER CAs	**New Due Date**	07/30/2009 0000
Modified	07/08/2009 1047 - ^PER CAs	**New Due Date**	08/03/2009 0000

SUB TASK HISTORY

No Subtasks

-- end of report --

Save

Problem Evaluation Request (PER)

WRPS-PER-2009-0739
In Process/Work

PER No	Date of Discovery	Time of Discovery (24:00)	Project
WRPS-PER-2009-0739	04/22/2009	12:00	IS/IH-BO

Location

B Farm

How Was Problem Discovered

MOP

Description of Concern or Problem

Complete the vapor characterization in B and BY farms. The logging crew still has to wear respiratory protection in these farms when doing LOW logging, or other work. Completion of this characterization will provide options to the personnel required to wear respiratory protection now.

Requirement Not Satisfied	Source Document Number

Equipment Identification Number	System Identification
NA	

Immediate actions Taken or Planned

None required.

Recommended Corrective actions

Complete monitoring. I believe it is already planned.

Originator Contact

No

Originators Name	Originators ID	Originators Phone	Date Initiated
Schofield, John S	H0033483	(509) 373-2245	04/22/2009

SHIFT OPERATIONS REVIEW

Title

Complete the vapor characterization in B and BY farms

How Discovered	Agency
self-ID prior to event	

Reportability	SSC Operability	Operability Review	Comp Measures Req
Non-Reportable	N/A	N/A	

Describe actions Taken or Recommended

No additional actions taken or recommended by Base Ops SO

SO Reviewer Name	SO Reviewer ID	SO Reviewer Phone	SO Review Date
Strasser, David W	H0075556	(509) 373-2689	04/22/2009

SCREENING

PER Significance Level	
PIE/CIM	

Independent Assessment Review	Occurrence Report Number	Externally Identified	
No		No	

Assigned Responsible Manager	Facilities Rep / SSO	Safety Management Rep	
Hyman, Sandra D			

Program	Safety Management Program
• N/A	• Industrial Safety

PER Screening Comments

No comments

(Nancy Brown 04/23/09)

RE-SCREEN REQUEST (Prior to Launch): B and BY Tank Farms characterization falls under Base Operations and this PER should be assigned to Sandy Hyman or Kim Roueche (I'll let Sandy decide)
(Mark Jones 04/23/09)

RE-SCREEN COMMENTS: Change from Mark Jones to Sandy Hyman.
(Nancy Brown 04/23/09)

Causal Code			
MGT/Comm/Train	**Human Performance**	**GEMS**	**Equip/Eng/Other**
Failed Barrier	**ORPS Code**	**Functional Area**	**Work Process**
	Not Applicable	Occupational Safety and Health	• Respiratory Protection
ISMS	**Consequence Code**		
Perform work within the controls	• Safety Concerns - Safety concerns, suggestions, and potential safety issues		
PER Screening Chair	**PER Screening Chair ID**	**PER Screening Chair Phone**	**PER Screening Date**
Brown, Nancy L	H0088797	(509) 373-0992	04/23/2009
PAAA REVIEW			
PAAA Screening	**PAAA Codes**	**Function Codes**	
Not subject to PAAA			
NTS Report Number	**NTS Report Date**		
Repetitive / Recurrent	**Programmatic**	**Intentional Violation / Misrepresentation**	
No	No	No	
PAAA Screening Comments			
PAAA Reviewer Name	**PAAA Review Date**		
Anderson, Craig E	04/23/2009		
PAAA Approver Name	**PAAA Approve Date**		
Anderson, Craig E	04/24/2009		
SENIOR MANAGEMENT REVIEW/CONCURRENCE			
TF Operations Morning Leadership Call			
N/A			
Instructions for Responsible Manager			
Evaluate suggestion, enter comments and required actions on PIE/CIM tab of the PER. Disposition in accordance with TFC-ESHQ-Q_C-C-01, Problem Evaluation Request.			
Senior Management	**Sr Mgmt ID**	**Sr Mgmt Phone**	**Sr Mgmt Review Date**
Brown, Nancy L	H0088797	(509) 373-0992	04/27/2009
CAUSE ANALYSIS			
Description of Occurrence			
Extent of Condition			
Safety Significance			

Generic Implications
Remedial Corrective Action
Causal Analysis, Apparent Cause and/or Root Cause Analysis
PIE/CIM
Evaluation of PIE/CIM Initiative
The vapor characterization for BY farm has been initiated by performing the trending to determine when the tanks are breathing out. Sampling will be initiated based on the results of the trending and as resources become available.
ATTACHMENTS
Link to PER

AUDIT HISTORY

Change Date	Auditor	Comments
04/24/2009 07:19	Brown, Nancy L	'PER Screening Comments' was changed.
04/24/2009 10:56	Brown, Nancy L	'Assigned Responsible Manager' was changed. 'PER Screening Comments' was changed.
04/27/2009 10:30	Brown, Nancy L	Responsible Manager Task Launched by Brown, Nancy L

-- End of Report --
07/09/2009 03:30 PM

Task# WRPS-PER-2009-0739

E-STARS[R] Report
Task Detail Report
07/09/2009 1530

TASK INFORMATION			
Task#	WRPS-PER-2009-0739		
Subject	PIE; Complete the vapor characterization in B and BY farms		
Parent Task#		**Status**	Open
Reference		**Due**	06/21/2009
Originator	^PER Coordinator	**Priority**	Medium
Originator Phone		**Category**	PER
Origination Date	04/22/2009 1405	**Generic1**	None
Remote Task#		**Generic2**	None
Deliverable	PER Review	**Generic3**	None
Class	None	**View Permissions**	Global
Instructions	*No Instructions*		

ROUTING LISTS		
1	Responsible Manager	Active
	Evaluate suggestion, enter comments and required actions on PIE/CIM tab of the PER. Disposition in accordance with TFC-ESHQ-Q_C-C-01, Problem Evaluation Request.	
	• Hyman, Sandra D - Assign - Completed with comments - 05/28/2009 1548 *Instructions:*	
2	Review Initial PER	Inactive
	Review New PER	
	• ^SO(Strasser, David W) - Review - Concur - 04/22/2009 1425 *Instructions:*	
	• ^PER Screening(Brown, Nancy L) - Review - Concur - 04/23/2009 1449 *Instructions:*	
	• ^Mgr Review - Review - Withdrawn - 04/24/2009 0719 *Instructions:*	
	• ^PER Screening(Brown, Nancy L) - Review - Concur - 04/24/2009 1307 *Instructions:*	
	• ^Mgr Review - Review - Cancelled - 04/27/2009 1030 *Instructions:*	

ATTACHMENTS	
Attachments	1. Link to PER

COMMENTS	
Poster	Hyman, Sandra D - 05/28/2009 1548
	Completed
	See PIE/CIM tab of PER.

TASK DUE DATE HISTORY			
Modified	04/27/2009 1030 - ^PER Coordinator	**New Due Date**	06/21/2009 1630

Task# WRPS-PER-2009-0739			
Modified	04/27/2009 1030 - ^PER Coordinator	**New Due Date**	06/21/2009 1630
Modified	04/22/2009 1405 - ^PER Coordinator	**New Due Date**	04/24/2009 1630
SUB TASK HISTORY			
No Subtasks			

-- end of report --

Save

Problem Evaluation Request (PER)

WRPS-PER-2009-0741
Closed 04/24/2009 09:00

PER No	Date of Discovery	Time of Discovery (24:00)	Project
WRPS-PER-2009-0741	04/22/2009	12:00	IS/IH-BO

Location

B Farm

How Was Problem Discovered

MOP

Description of Concern or Problem

Complete the vapor characterization in B and BY farms. The logging crew still has to wear respiratory protection in these farms when doing LOW logging, or other work. Completion of this characterization will provide options to the personnel required to wear respiratory protection now.

Requirement Not Satisfied	Source Document Number

Equipment Identification Number	System Identification
NA	

Immediate actions Taken or Planned

None required.

Recommended Corrective actions

Complete monitoring. I believe it is already planned.

Originator Contact

No

Originators Name	Originators ID	Originators Phone	Date Initiated
Schofield, John S	H0033483	(509) 373-2245	04/22/2009

SHIFT OPERATIONS REVIEW

Title

Complete the vapor characterization in B and BY farms.

How Discovered	Agency
self-ID prior to event	

Reportability	SSC Operability	Operability Review	Comp Measures Req
Non-Reportable	N/A	N/A	

Describe actions Taken or Recommended

No additional actions taken or recommended by Base Ops SO

SO Reviewer Name	SO Reviewer ID	SO Reviewer Phone	SO Review Date
Strasser, David W	H0075556	(509) 373-2689	04/22/2009

SCREENING

PER Significance Level	
Invalid	

Independent Assessment Review	Occurrence Report Number	Externally Identified	
No		No	

Assigned Responsible Manager	Facilities Rep / SSO	Safety Management Rep	
Maciuca, Tino			

Program	Safety Management Program
• N/A	• ^N/A^

PER Screening Comments

Invalid --Duplicate of WRPS-PER-2009-0739.

(Nancy Brown 04/23/09)			
Causal Code			
MGT/Comm/Train	**Human Performance**	**GEMS**	**Equip/Eng/Other**
Failed Barrier	**ORPS Code**	**Functional Area**	**Work Process**
	Not Applicable		
ISMS	**Consequence Code**		
PER Screening Chair	**PER Screening Chair ID**	**PER Screening Chair Phone**	**PER Screening Date**
Brown, Nancy L	H0088797	(509) 373-0992	04/23/2009
PAAA REVIEW			
PAAA Screening	**PAAA Codes**	**Function Codes**	
Not subject to PAAA			
NTS Report Number	**NTS Report Date**		
Repetitive / Recurrent	**Programmatic**	**Intentional Violation / Misrepresentation**	
No	No	No	
PAAA Screening Comments			
PAAA Reviewer Name	**PAAA Review Date**		
Anderson, Craig E	04/23/2009		
PAAA Approver Name	**PAAA Approve Date**		
SENIOR MANAGEMENT REVIEW/CONCURRENCE			
TF Operations Morning Leadership Call			
N/A			
Instructions for Responsible Manager			
Senior Management	**Sr Mgmt ID**	**Sr Mgmt Phone**	**Sr Mgmt Review Date**
Brown, Nancy L	H0088797	(509) 373-0992	04/24/2009
ATTACHMENTS			
Link to PER			

-- End of Report --
04/24/2009 09:15 AM

Task# WRPS-PER-2009-0741

E-STARS[R] Report
Task Detail Report
04/24/2009 0915

TASK INFORMATION

Task#	WRPS-PER-2009-0741		
Subject	INVALID; Complete the vapor characterization in B and BY farms.		
Parent Task#		Status	CLOSED 04/24/2009
Reference		Due	04/24/2009
Originator	^PER Coordinator	Priority	Medium
Originator Phone		Category	PER
Origination Date	04/22/2009 1406	Generic1	None
Remote Task#		Generic2	None
Deliverable	PER Review	Generic3	None
Class	None	View Permissions	Global
Instructions	*No Instructions*		

ROUTING LISTS

1	Review Initial PER	Inactive
	Review New PER	
	• ^SO(Strasser, David W) - Review - Concur - 04/22/2009 1428 *Instructions:*	
	• ^PER Screening(Brown, Nancy L) - Review - Concur - 04/23/2009 1454 *Instructions:*	
	• ^Mgr Review(Brown, Nancy L) - Review - Concur - 04/24/2009 0839 *Instructions:*	

ATTACHMENTS

Attachments	1. Link to PER

COMMENTS

No Comments

TASK DUE DATE HISTORY

Modified	04/22/2009 1406 - ^PER Coordinator	New Due Date	04/24/2009 1630

SUB TASK HISTORY

No Subtasks

-- end of report --

Save

Problem Evaluation Request (PER)

WRPS-PER-2009-0762
Closed 04/29/2009 15:45

PER No	Date of Discovery	Time of Discovery (24:00)	Project
WRPS-PER-2009-0762	04/08/2009	12:00	RadCon-RC

Location

2704HV

How Was Problem Discovered

Maintenance Activity

Description of Concern or Problem

RC Radiological Control was notified by Base Operations Maintenance that air sampler serial number 21730 was found out of tolerance (greater than +/- 10% of Conventionally True Value) during calibration in accordance with 6-RM-718. Calibration was performed and documented in accordance with Work Order TFC-WO-09-1447.

Requirement Not Satisfied	Source Document Number

Equipment Identification Number	System Identification
SN 21730	Radiation Monitoring

Immediate actions Taken or Planned

Notified RC RadCon management.
Initiated PER in accordance with TFC-ESHQ-RP_INS-P-05.

RC RadCon performed an evaluation of the out of tolerance condition in accordance with TFC-ESHQ-RP_INS-P-05. As annotated on the work order, the unit had been dropped and malfunctioned in the field. The unit was removed from service due to damage to air sampler head. Previous performance of this instrument, prior to removal from use, was within specification as indicated on the air sampler head As-Left value.

No further action or analysis is necessary for closure of this PER.

Recommended Corrective actions

Recommend screening as Trend Only.

Originator Contact

No

Originators Name	Originators ID	Originators Phone	Date Initiated
Duffy, Bill L	H7812206	(509) 373-3133	04/27/2009

SHIFT OPERATIONS REVIEW

Title

air sampler serial number 21730 was found out of tolerance

How Discovered	Agency
self-ID result of event	

Reportability	SSC Operability	Operability Review	Comp Measures Req
Non-Reportable	N/A	N/A	

Describe actions Taken or Recommended

No additional actions taken or recommended by Base ops SO

SO Reviewer Name	SO Reviewer ID	SO Reviewer Phone	SO Review Date
Strasser, David W	H0075556	(509) 373-2689	04/27/2009

SCREENING

PER Significance Level	
Trend Only	

Independent Assessment Review	Occurrence Report Number	Externally Identified	
No		No	

Assigned Responsible Manager	**Facilities Rep / SSO**	**Safety Management Rep**	
Adams, Ed J			
Program		**Safety Management Program**	
• N/A		• Radiological Control	
PER Screening Comments			
No further action neede. LBG 4-28-09			
Causal Code			
MGT/Comm/Train	**Human Performance**	**GEMS**	**Equip/Eng/Other**
Failed Barrier	**ORPS Code**	**Functional Area**	**Work Process**
	Not Applicable	Radiation Protection	• Radiological Instrumentation
ISMS	**Consequence Code**		
Provide feedback and continuous improvement	• Rad Inst - Calibration - Out of tolerances, pass due calibrations, traceability issues, training, problems with procedural processes		
PER Screening Chair	**PER Screening Chair ID**	**PER Screening Chair Phone**	**PER Screening Date**
Glaman, Linda R	H0060893	(509) 376-1776	04/28/2009
PAAA REVIEW			
PAAA Screening	**PAAA Codes**	**Function Codes**	
Not subject to PAAA			
NTS Report Number	**NTS Report Date**		
Repetitive / Recurrent	**Programmatic**	**Intentional Violation / Misrepresentation**	
No	No	No	
PAAA Screening Comments			
PAAA Reviewer Name	**PAAA Review Date**		
Anderson, Craig E	04/28/2009		
PAAA Approver Name	**PAAA Approve Date**		
Anderson, Craig E	04/29/2009		
SENIOR MANAGEMENT REVIEW/CONCURRENCE			
TF Operations Morning Leadership Call			
N/A			
Instructions for Responsible Manager			
Senior Management	**Sr Mgmt ID**	**Sr Mgmt Phone**	**Sr Mgmt Review Date**
Glaman, Linda R	H0060893	(509) 376-1776	04/29/2009
ATTACHMENTS			
Link to PER			

-- End of Report --
04/29/2009 03:45 PM

Task# WRPS-PER-2009-0762			
E-STARS[R] Report Task Detail Report 04/29/2009 1545			
TASK INFORMATION			
Task#	WRPS-PER-2009-0762		
Subject	Trend; air sampler serial number 21730 was found out of tolerance		
Parent Task#		Status	CLOSED 04/29/2009
Reference		Due	04/29/2009
Originator	^PER Coordinator	Priority	Medium
Originator Phone		Category	PER
Origination Date	04/27/2009 0838	Generic1	None
Remote Task#		Generic2	None
Deliverable	PER Review	Generic3	None
Class	None	View Permissions	Global
Instructions	*No Instructions*		
ROUTING LISTS			
1	Review Initial PER		Inactive
	Review New PER		
	• ^SO(Strasser, David W) - Review - Concur - 04/27/2009 1500 *Instructions:*		
	• ^PER Screening(Glaman, Linda R) - Review - Concur - 04/28/2009 1354 *Instructions:*		
	• ^Mgr Review(Glaman, Linda R) - Review - Concur - 04/29/2009 0840 *Instructions:*		
ATTACHMENTS			
Attachments	1. Link to PER		
COMMENTS			
Poster	^PER Coordinator - 04/29/2009 0915		
	Task Re-Open		
	The ESTARS Task can not be closed because the PAAA Tab has Not been completed		
TASK DUE DATE HISTORY			
Modified	04/27/2009 0838 - ^PER Coordinator	New Due Date	04/29/2009 1630

Task# WRPS-PER-2009-0762
SUB TASK HISTORY
No Subtasks
-- end of report --

Save

Problem Evaluation Request (PER)

WRPS-PER-2009-0763
Closed 04/29/2009 15:45

PER No	Date of Discovery	Time of Discovery (24:00)	Project
WRPS-PER-2009-0763	04/08/2009	12:00	RadCon-RC

Location

2704HV

How Was Problem Discovered

Maintenance Activity

Description of Concern or Problem

RC Radiological Control was notified by Base Operations Maintenance that air sampler serial number 21724 was found out of tolerance (greater than +/- 10% of Conventionally True Value) during calibration in accordance with 6-RM-718. Calibration was performed and documented in accordance with Work Order TFC-WO-09-1448.

Requirement Not Satisfied	Source Document Number

Equipment Identification Number	System Identification
SN 21724	Radiation Monitoring

Immediate actions Taken or Planned

Notified RC RadCon management.
Initiated PER in accordance with TFC-ESHQ-RP_INS-P-05.

RC RadCon performed an evaluation of the out of tolerance condition in accordance with TFC-ESHQ-RP_INS-P-05. As annotated on the work order, the unit had been dropped and malfunctioned in the field. The unit was removed from service due to damage to air sampler head. Previous performance of this instrument, prior to removal from use, was within specification as indicated on the air sampler head As-Left value.

No further action or analysis is necessary for closure of this PER.

Recommended Corrective actions

Recommend screening as Trend Only.

Originator Contact

No

Originators Name	Originators ID	Originators Phone	Date Initiated
Duffy, Bill L	H7812206	(509) 373-3133	04/27/2009

SHIFT OPERATIONS REVIEW

Title

air sampler serial number 21724 was found out of tolerance

How Discovered	Agency
self-ID prior to event	

Reportability	SSC Operability	Operability Review	Comp Measures Req
Non-Reportable	N/A	N/A	

Describe actions Taken or Recommended

No additional actions taken or recommended by Base ops SO

SO Reviewer Name	SO Reviewer ID	SO Reviewer Phone	SO Review Date
Strasser, David W	H0075556	(509) 373-2689	04/27/2009

SCREENING

PER Significance Level	
Trend Only	

Independent Assessment Review	Occurrence Report Number	Externally Identified	
No		No	

Assigned Responsible Manager	**Facilities Rep / SSO**	**Safety Management Rep**	
Adams, Ed J			
Program		**Safety Management Program**	
• N/A		• Radiological Control	
PER Screening Comments			
no further action require. LBG 4-28-09			
Causal Code			
MGT/Comm/Train	**Human Performance**	**GEMS**	**Equip/Eng/Other**
Failed Barrier	**ORPS Code**	**Functional Area**	**Work Process**
	Not Applicable	Radiation Protection	• Radiological Instrumentation
ISMS	**Consequence Code**		
Provide feedback and continuous improvement	• Rad Inst - Calibration - Out of tolerances, pass due calibrations, traceability issues, training, problems with procedural processes		
PER Screening Chair	**PER Screening Chair ID**	**PER Screening Chair Phone**	**PER Screening Date**
Glaman, Linda R	H0060893	(509) 376-1776	04/28/2009
PAAA REVIEW			
PAAA Screening	**PAAA Codes**	**Function Codes**	
Not subject to PAAA			
NTS Report Number	**NTS Report Date**		
Repetitive / Recurrent	**Programmatic**	**Intentional Violation / Misrepresentation**	
No	No	No	
PAAA Screening Comments			
PAAA Reviewer Name	**PAAA Review Date**		
Anderson, Craig E	04/28/2009		
PAAA Approver Name	**PAAA Approve Date**		
Anderson, Craig E	04/29/2009		
SENIOR MANAGEMENT REVIEW/CONCURRENCE			
TF Operations Morning Leadership Call			
N/A			
Instructions for Responsible Manager			
Senior Management	**Sr Mgmt ID**	**Sr Mgmt Phone**	**Sr Mgmt Review Date**
Glaman, Linda R	H0060893	(509) 376-1776	04/29/2009
ATTACHMENTS			
Link to PER			

-- End of Report --
04/29/2009 03:45 PM

Task# WRPS-PER-2009-0763			
E-STARS[R] Report Task Detail Report 04/29/2009 1545			
TASK INFORMATION			
Task#	WRPS-PER-2009-0763		
Subject	Trend; air sampler serial number 21724 was found out of tolerance		
Parent Task#		Status	CLOSED 04/29/2009
Reference		Due	04/29/2009
Originator	^PER Coordinator	Priority	Medium
Originator Phone		Category	PER
Origination Date	04/27/2009 0842	Generic1	None
Remote Task#		Generic2	None
Deliverable	PER Review	Generic3	None
Class	None	View Permissions	Global
Instructions	*No Instructions*		
ROUTING LISTS			
1	Review Initial PER		Inactive
	Review New PER		
	• ^SO(Strasser, David W) - Review - Concur - 04/27/2009 1501 *Instructions:*		
	• ^PER Screening(Glaman, Linda R) - Review - Concur - 04/28/2009 1355 *Instructions:*		
	• ^Mgr Review(Glaman, Linda R) - Review - Concur - 04/29/2009 0841 *Instructions:*		
ATTACHMENTS			
Attachments	1. Link to PER		
COMMENTS			
Poster	^PER Coordinator - 04/29/2009 0915		
	Task Re-Open		
	The ESTARS Task can not be closed because the PAAA Tab has Not been completed		
TASK DUE DATE HISTORY			
Modified	04/27/2009 0842 - ^PER Coordinator	New Due Date	04/29/2009 1630

Task# WRPS-PER-2009-0763
SUB TASK HISTORY
No Subtasks
-- end of report --

Save

Problem Evaluation Request (PER)

WRPS-PER-2009-0793
Closed 04/30/2009 09:00

PER No	Date of Discovery	Time of Discovery (24:00)	Project
WRPS-PER-2009-0793	04/28/2009	12:20	Environmental

Location

204AR

How Was Problem Discovered

Maintenance Activity

Description of Concern or Problem

on 04/09/2009 hpt wrote a per { 2009-0618 } that has high air-samples taken from the 204-ar . there has been many talks with rad. con ,operations as to who owns the facility. there has been no ownership as to who's problem it is and meanwhile the employee's are taken the large dose from no ventilation, there for a stop work has been issued at the shift office.

Requirement Not Satisfied	Source Document Number

Equipment Identification Number	System Identification

Immediate actions Taken or Planned

notified shift office

Recommended Corrective actions

have management take ownership instead of having the worker issue a stop work to solve a rad. safety problems.

Originator Contact

I would like to review the the corrective actions at closure to ensure they were effective

Originators Name	Originators ID	Originators Phone	Date Initiated
Roberson, William L L	H0002204	(509) 373-4449	04/28/2009

SHIFT OPERATIONS REVIEW

Title

Stop Work for access to 204-AR

How Discovered	Agency
self-ID prior to event	

Reportability	SSC Operability	Operability Review	Comp Measures Req
Non-Reportable	N/A	N/A	

Describe actions Taken or Recommended

Base Ops SO logged stop work and controlled access to 204-AR. Required notifications completed.

SO Reviewer Name	SO Reviewer ID	SO Reviewer Phone	SO Review Date
Strasser, David W	H0075556	(509) 373-2689	04/28/2009

SCREENING

PER Significance Level	
Trend Only	

Independent Assessment Review	Occurrence Report Number	Externally Identified	
No		No	
Assigned Responsible Manager	**Facilities Rep / SSO**	**Safety Management Rep**	
Hyman, Sandra D			

Program	Safety Management Program
• ALARA	• Radiological Control

PER Screening Comments			
LBG 4-29-09			
Causal Code			
MGT/Comm/Train	**Human Performance**	**GEMS**	**Equip/Eng/Other**
Failed Barrier	**ORPS Code**	**Functional Area**	**Work Process**
	Not Applicable	Radiation Protection	• Radiological Work Planning
ISMS	**Consequence Code**		
Develop and implement hazard controls			
PER Screening Chair	**PER Screening Chair ID**	**PER Screening Chair Phone**	**PER Screening Date**
Glaman, Linda R	H0060893	(509) 376-1776	04/29/2009
PAAA REVIEW			
PAAA Screening	**PAAA Codes**	**Function Codes**	
Not subject to PAAA			
NTS Report Number	**NTS Report Date**		
Repetitive / Recurrent	**Programmatic**	**Intentional Violation / Misrepresentation**	
No	No	No	
PAAA Screening Comments			
PAAA Reviewer Name	**PAAA Review Date**		
Anderson, Craig E	04/29/2009		
PAAA Approver Name	**PAAA Approve Date**		
Anderson, Craig E	04/29/2009		
SENIOR MANAGEMENT REVIEW/CONCURRENCE			
TF Operations Morning Leadership Call			
n/a			
Instructions for Responsible Manager			
Senior Management	**Sr Mgmt ID**	**Sr Mgmt Phone**	**Sr Mgmt Review Date**
Glaman, Linda R	H0060893	(509) 376-1776	04/30/2009
ATTACHMENTS			
Link to PER			

-- End of Report --
04/30/2009 09:15 AM

Task# WRPS-PER-2009-0793

E-STARS[R] Report
Task Detail Report
04/30/2009 0915

TASK INFORMATION			
Task#	WRPS-PER-2009-0793		
Subject	Trend; High air-samples taken from the 204-AR stop work		
Parent Task#		Status	CLOSED 04/30/2009
Reference		Due	04/30/2009
Originator	^PER Coordinator	Priority	Medium
Originator Phone		Category	PER
Origination Date	04/28/2009 1246	Generic1	None
Remote Task#		Generic2	None
Deliverable	PER Review	Generic3	None
Class	None	View Permissions	Global
Instructions	*No Instructions*		

ROUTING LISTS		
1	Review Initial PER	Inactive
	Review New PER	
	• ^SO(Strasser, David W) - Review - Concur - 04/28/2009 1345 *Instructions:*	
	• ^PER Screening(Glaman, Linda R) - Review - Concur - 04/29/2009 1329 *Instructions:*	
	• ^Mgr Review(Glaman, Linda R) - Review - Concur - 04/30/2009 0830 *Instructions:*	

ATTACHMENTS	
Attachments	1. Link to PER

COMMENTS

No Comments

TASK DUE DATE HISTORY			
Modified	04/28/2009 1246 - ^PER Coordinator	New Due Date	04/30/2009 1630

SUB TASK HISTORY

No Subtasks

-- end of report --

Save

Problem Evaluation Request (PER)

WRPS-PER-2009-0794
Closed 05/07/2009 10:45

PER No	Date of Discovery	Time of Discovery (24:00)	Project
WRPS-PER-2009-0794	04/28/2009	13:20	Human Resources

Location

204AR

How Was Problem Discovered

Radiological Assessment

Description of Concern or Problem

On 04/28/2009 at 1225 hr's hpt issued a stop work for restricted access at 204-ar . the operations personnel reported to 204-ar to restrict access at 1310 hr's. operations showed up to hang signs at 204-ar at 1310hr's and their was a employee inside the facility at that time. the problem is that it took 45 min. to respond to the restrictions at the 204-ar facility

Requirement Not Satisfied	Source Document Number

Equipment Identification Number	System Identification

Immediate actions Taken or Planned

per written

Recommended Corrective actions

Originator Contact

I would like to review the the corrective actions at closure to ensure they were effective

Originators Name	Originators ID	Originators Phone	Date Initiated
Roberson, William L L	H0002204	(509) 373-4449	04/28/2009

SHIFT OPERATIONS REVIEW

Title

204-AR stop work

How Discovered	Agency
self-ID prior to event	

Reportability	SSC Operability	Operability Review	Comp Measures Req
Non-Reportable	N/A	N/A	

Describe actions Taken or Recommended

Base Ops SO was in the process of controlling access to 204-AR. No 204-AR specific keys were checked out as checked at shift office. Send page was sent out immediately, shift routine operators were notified within 10 minutes of stop work. Operators were assigned to hang signs within 25 minutes of stop work. No imminent hazard was present therefore things were handled in a calm and controlled manner. No further actions taken.

SO Reviewer Name	SO Reviewer ID	SO Reviewer Phone	SO Review Date
Strasser, David W	H0075556	(509) 373-2689	04/28/2009

SCREENING

PER Significance Level	
Trend Only	

Independent Assessment Review	Occurrence Report Number	Externally Identified	
No		No	

Assigned Responsible Manager	Facilities Rep / SSO	Safety Management Rep	
Owen, Pete			

Program	Safety Management Program
• N/A	• ^N/A^

PER Screening Comments

Verify there were no personnel in the facility and/or there is no key control issue.

LBG 4-29-09

RESCREEN REQUEST (FUR): Posted By: Owen, Pete 05/05/2009 1220

This issue was discussed with the Shift Manager that was on duty at the time the radiological stop work was issued. The employee expressed a concern regarding the Radon levels in this facility and expressed his desire to issue a radiological stop work. The on-duty Shift Manager honored this radiological stop work at 1225 by making an entry into the Shift Log. The Shift Manager then sent out a SOEN message regarding this radiological stop work. The Shift Manager then started making the required notifications when a stop work is issued. The Shift Manager then called for an NCO to come to the Shift Office to obtain the appropriate signs and proceed to 204-AR to post the facility as "Restricted Access - Contact Shift Manager Prior To Entry". When the NCO arrived at the facility, another NCO was leaving. The second NCO had entered the building to obtain daily tank level readings. While the Shift Manager had verified that there weren't any 204-AR keys checked out, he forgot about the keys that are turned over from shift to shift. In hindsight, the Shift Manager recognized that he should have contacted the Lead NCO for the shift and had him inform all of the other operators about the access restrictions to 204-AR.

It appears the issue the employee has is that it took 45 minutes to respond to the radiological stop work. Per the Shift Manager, he feels that he was continuously working toward ensuring the proper notifications were made and the proper controls put in place. The Shift Manager felt that since there was no immediate threat to personnel safety, the speed of his response was appropriate.

RE-SCREENING COMMENTS: Change from F/E to Trend Only.
(Nancy Brown 05/06/09)

Causal Code

MGT/Comm/Train	**Human Performance**	**GEMS**	**Equip/Eng/Other**
Failed Barrier	**ORPS Code**	**Functional Area**	**Work Process**
	Not Applicable	Operations	• Hazard Communication
ISMS	**Consequence Code**		
Develop and implement hazard controls	• Communications - Inadequate communications, roles, responsibilities • Safety Concerns - Safety concerns, suggestions, and potential safety issues		
PER Screening Chair	**PER Screening Chair ID**	**PER Screening Chair Phone**	**PER Screening Date**
Glaman, Linda R	H0060893	(509) 376-1776	04/29/2009

PAAA REVIEW

PAAA Screening	**PAAA Codes**	**Function Codes**	
Not subject to PAAA			
NTS Report Number	**NTS Report Date**		
Repetitive / Recurrent	**Programmatic**	**Intentional Violation / Misrepresentation**	
No	No	No	
PAAA Screening Comments			
PAAA Reviewer Name	**PAAA Review Date**		
Anderson, Craig E	04/29/2009		
PAAA Approver Name	**PAAA Approve Date**		
Anderson, Craig E	04/29/2009		

SENIOR MANAGEMENT REVIEW/CONCURRENCE			
TF Operations Morning Leadership Call			
n/a			
Instructions for Responsible Manager			
Review the PER Screening Tab for requested data. Complete the task in E-STARS in accordance with TFC-ESHQ-Q_C-C-01, Problem Evaluation Request.			
Senior Management	**Sr Mgmt ID**	**Sr Mgmt Phone**	**Sr Mgmt Review Date**
Glaman, Linda R	H0060893	(509) 376-1776	04/30/2009
ATTACHMENTS			
Link to PER			
AUDIT HISTORY			
Change Date	**Auditor**	**Comments**	
04/30/2009 08:31	Glaman, Linda R	Responsible Manager Task Launched by Glaman, Linda R	
05/05/2009 16:02	Glaman, Linda R	'PER Screening Comments' was changed.	
05/06/2009 14:37	Brown, Nancy L	'PER Significance Level' was changed from Further Evaluation to Trend Only. 'PER Screening Comments' was changed.	

-- End of Report --
05/07/2009 10:45 AM

Task# WRPS-PER-2009-0794			
E-STARS[R] Report Task Detail Report 05/07/2009 1045			
TASK INFORMATION			
Task#	WRPS-PER-2009-0794		
Subject	TREND; 204-AR stop work		
Parent Task#		Status	CLOSED 05/07/2009
Reference		Due	05/07/2009
Originator	^PER Coordinator	Priority	Medium
Originator Phone		Category	PER
Origination Date	04/28/2009 1401	Generic1	None
Remote Task#		Generic2	None
Deliverable	PER Review	Generic3	None
Class	None	View Permissions	Global
Instructions	*No Instructions*		
ROUTING LISTS			
1	Responsible Manager		Inactive
	Review the PER Screening Tab for requested data. Complete the task in E-STARS in accordance with TFC-ESHQ-Q_C-C-01, Problem Evaluation Request.		
	• Owen, Pete - Assign - Completed with comments - 05/05/2009 1221 *Instructions:*		
	• Owen, Pete - Assign - Completed with comments - 05/05/2009 1417 *Instructions:* Did you contact the originator about the PER? Document your contact in the response window.		
	• ^PER Screening(Brown, Nancy L) - Assign - Completed - 05/06/2009 1437 *Instructions:*		
	• ^Mgr Review(Brown, Nancy L) - Review - Concur - 05/07/2009 1006 *Instructions:*		
2	Review Initial PER		Inactive
	Review New PER		
	• ^SO(Strasser, David W) - Review - Concur - 04/28/2009 1707 *Instructions:*		
	• ^PER Screening(Glaman, Linda R) - Review - Concur - 04/29/2009 1331 *Instructions:*		

Task# WRPS-PER-2009-0794	
	• ^Mgr Review(Glaman, Linda R) - Review - Concur - 04/30/2009 0831 *Instructions:*
ATTACHMENTS	
Attachments	1. Link to PER
COMMENTS	
Poster	Owen, Pete - 05/05/2009 1220
	Evaluation of time to implement employee radiological stop work
	This issue was discussed with the Shift Manager that was on duty at the time the radiological stop work was issued. The employee expressed a concern regarding the Radon levels in this facility and expressed his desire to issue a radiological stop work. The on-duty Shift Manager honored this radiological stop work at 1225 by making an entry into the Shift Log. The Shift Manager then sent out a SOEN message regarding this radiological stop work. The Shift Manager then started making the required notifications when a stop work is issued. The Shift Manager then called for an NCO to come to the Shift Office to obtain the appropriate signs and proceed to 204-AR to post the facility as "Restricted Access - Contact Shift Manager Prior To Entry". When the NCO arrived at the facility, another NCO was leaving. The second NCO had entered the building to obtain daily tank level readings. While the Shift Manager had verified that there weren't any 204-AR keys checked out, he forgot about the keys that are turned over from shift to shift. In hindsight, the Shift Manager recognized that he should have contacted the Lead NCO for the shift and had him inform all of the other operators about the access restrictions to 204-AR. It appears the issue the employee has is that it took 45 minutes to respond to the radiological stop work. Per the Shift Manager, he feels that he was continuously working toward ensuring the proper notifications were made and the proper controls put in place. The Shift Manager felt that since there was no immediate threat to personnel safety, the speed of his response was appropriate.
Poster	Owen, Pete - 05/05/2009 1221
	Completed
	Evaluation complete. No further actions recommended. Pete Owen Manager, Shift Operations
Poster	Owen, Pete - 05/05/2009 1417
	Completed
	Evaluation complete. No further actions recommended. Pete Owen Manager, Shift Operations
TASK DUE DATE HISTORY	

Task# WRPS-PER-2009-0794			
Modified	04/30/2009 0831 - ^PER Coordinator	New Due Date	05/07/2009 1630
Modified	04/30/2009 0831 - ^PER Coordinator	New Due Date	05/07/2009 1630
Modified	04/28/2009 1401 - ^PER Coordinator	New Due Date	04/30/2009 1630
SUB TASK HISTORY			
No Subtasks			
-- end of report --			

Save

Problem Evaluation Request (PER)

WRPS-PER-2009-0802
In Process/Work

PER No	Date of Discovery	Time of Discovery (24:00)	Project
WRPS-PER-2009-0802	04/28/2009	15:00	Base Ops

Location

272AW

How Was Problem Discovered

General Observation

Description of Concern or Problem

Prior to the start of transfer AP-101 to AW-102, shift RCT was informed to attend a pre-job brief for support of the transfer. RCT went to the pre-job and asked to review the baseline survey for the transfer. The transfer OE did not have a copy of the baseline survey. The RCT then went back to RCT office to check the survey report log and found that no baseline survey for the transfer had been logged in the survey report book. RC Supervisor was notified that the radiological survey was not completed and the RC Supervisor and RCT determined that the radiological survey was performed, but the survey report had not been completed. At that time (1508), an announcement was made that the transfer had started. Operations started the transfer without giving the shift RCT a proper pre-job prior to starting the transfer, without giving the shift RCT time to walk down the survey point locations in the farm, and without giving the shift RCT time to review the baseline survey and survey plan for the transfer. The shift manager and RC Supervisor were notified of problems. When the baseline survey was reviewed and completed by the RC Supervisor , the shift RCT reviewed the survey report along with the monitoring plan for the transfer. The RCT then went to AP control room for a brief pre-job (1640), and the initial survey after startup was at 1645... 97 minutes after system startup which is in violation for survey plan.

Requirement Not Satisfied	Source Document Number
RPP-PLAN-40466 section 6.1, 8b,c,d and 6.2 1b, Conduct of Ops 2.9 bullet 2	
Equipment Identification Number	**System Identification**
	Waste Transfer

Immediate actions Taken or Planned

Notified RC Supervisor and Shift Manager. Reviewed appropriate documents prior to pre-job and transfer.

Recommended Corrective actions

Prior to starting a transfer, allow RCT to verify completed baseline survey and Radiological Monitoring Plan as well as walk down survey points to familiarize locations and verify labeling. Perform pre-job brief with all associated workers with transfer. Notify RCT of approximate start time of transfer, allowing him/her time to review applicable documents, and the opportunity to perform the initial survey within the timeline per the procedure. Insert a place in the the transfer procedures to have RC supervisor or delegate to sign, confirming the baseline survey report has been reviewed and completed.

Originator Contact

I would like to review the the corrective actions at closure to ensure they were effective

Originators Name	Originators ID	Originators Phone	Date Initiated
Richter, Joe	H0052778	(509) 373-2526	04/29/2009

SHIFT OPERATIONS REVIEW

Title

HEALTH PHYSICS TECHNICIAN MANAGEMENT PROBLEM

How Discovered	Agency
self-ID prior to event	

Reportability	SSC Operability	Operability Review	Comp Measures Req
Non-Reportable	N/A	N/A	

Describe actions Taken or Recommended

No additional actions necessary or recommended. The RCT Supervisor and Transfer OE discussed all actual events in this PER and managed start of the transfer activity in accordance with approved procedures.

SO Reviewer Name	SO Reviewer ID	SO Reviewer Phone	SO Review Date
Garrett, Mark S	H0008224	(509) 372-1115	04/29/2009

SCREENING			
PER Significance Level			
PER with Resolution			
Independent Assessment Review	**Occurrence Report Number**	**Externally Identified**	
Yes		No	
Assigned Responsible Manager	**Facilities Rep / SSO**	**Safety Management Rep**	
Reynolds, Tammy R			
Program		**Safety Management Program**	
• N/A		• Conduct of Operations • Safety Culture (ISMS)	
PER Screening Comments			
PER w/ Res with Formal Apparent Cause Analysis cc: Jim Rolph, Brad Brannan (Nancy Brown 04/30/09)			
Causal Code			
MGT/Comm/Train	**Human Performance**	**GEMS**	**Equip/Eng/Other**
Failed Barrier	**ORPS Code**	**Functional Area**	**Work Process**
	Not Applicable	Radiation Protection	• Radiological Work Planning
ISMS	**Consequence Code**		
Perform work within the controls	• Rad WorkPlan - Implementation - Failure to properly execute work instructions, RWP requirements, or procedures		
PER Screening Chair	**PER Screening Chair ID**	**PER Screening Chair Phone**	**PER Screening Date**
Brown, Nancy L	H0088797	(509) 373-0992	04/30/2009
PAAA REVIEW			
PAAA Screening	**PAAA Codes**	**Function Codes**	
PAAA, Non-NTS Reportable	• 10 CFR 830.122 (e)(1)	• Conduct of Operations (including Drills and Exercises) • Records • RadCon Monitoring	
NTS Report Number	**NTS Report Date**		
Repetitive / Recurrent	**Programmatic**	**Intentional Violation / Misrepresentation**	
No	No	No	
PAAA Screening Comments			
PAAA Reviewer Name	**PAAA Review Date**		
Anderson, Craig E	05/04/2009		
PAAA Approver Name	**PAAA Approve Date**		
Anderson, Craig E	05/05/2009		
CAUSE ANALYSIS			
Description of Occurrence			

Extent of Condition
Safety Significance
Generic Implications
Remedial Corrective Action
Causal Analysis, Apparent Cause and/or Root Cause Analysis
ATTACHMENTS
Link to PER
RE_ PER EXTENSION WRPS-PER-2009-0802.msg

AUDIT HISTORY

Change Date	Auditor	Comments
05/04/2009 08:06	Glaman, Linda R	Responsible Manager Task Launched by Glaman, Linda R

-- End of Report --
08/06/2009 05:56 PM

Task# WRPS-PER-2009-0802

E-STARS[R] Report
Task Detail Report
08/06/2009 1756

TASK INFORMATION			
Task#	WRPS-PER-2009-0802		
Subject	RES; HEALTH PHYSICS TECHNICIAN MANAGEMENT PROBLEM		
Parent Task#		**Status**	Open
Reference		**Due**	09/05/2009
Originator	^PER Coordinator	**Priority**	Medium
Originator Phone		**Category**	PER
Origination Date	04/29/2009 1007	**Generic1**	None
Remote Task#		**Generic2**	None
Deliverable	PER Review	**Generic3**	None
Class	None	**View Permissions**	Global
Instructions	*No Instructions*		

ROUTING LISTS		
1	Responsible Manager	Active
	Review the PER Screening Tab for requested data. Complete the task in E-STARS in accordance with TFC-ESHQ-Q_C-C-01, and TFC-ESHQ-Q_ADM-C-12 Apparent Cause Analysis & Corrective Action Planning.	
	• Owen, Peter - Assign - Reassigned - 05/20/2009 1135 *Instructions:*	
	• Reynolds, Tammy R - Assign - Awaiting Response - Due Date - 08/28/2009 1630 *Instructions:*	
	• Reynolds, Tammy R - Assign - Withdrawn - 07/17/2009 0820 *Instructions:*	
	• Owen, Peter - Assign - Reassigned - 05/20/2009 1135 *Instructions:* Did you contact the originator about the PER? Document your contact in the response window.	
	• ^Independent Assessment Review - Review - Awaiting Response - Due Date - 09/01/2009 1630 *Instructions:* Independent Assessor Review	
2	Review Initial PER	Inactive
	Review New PER	
	• ^SO(Garrett, Mark S) - Review - Concur - 04/29/2009 1451 *Instructions:*	
	• ^PER Screening(Brown, Nancy L) - Review - Concur - 04/30/2009 1405 *Instructions:*	
	• ^Mgr Review(Glaman, Linda R) - Review - Concur - 05/04/2009 0806 *Instructions:*	

ATTACHMENTS	
Attachments	1. Link to PER 2. RE_ PER EXTENSION WRPS-PER-2009-0802.msg

COMMENTS	

Task# WRPS-PER-2009-0802

Poster	^PER Coordinator (Glaman, Linda R) - 07/17/2009 0821		
Editor	Glaman, Linda R (^PER Coordinator) - 07/17/2009 0822		
	1st extension to 8-28-09 per attached email. LBG 7-17-09		
	Please extend WRPS PER 2009-0802 until 8/28/2009 to allow the formal cause analysis to be completed. B Parnell for T Reynolds. 7-15-09 approved T Maciuca 7-15-09		
TASK DUE DATE HISTORY			
Modified	07/17/2009 0820 - ^PER Coordinator (Glaman, Linda R)	**New Due Date**	09/05/2009 1630
Modified	05/04/2009 0806 - ^PER Coordinator	**New Due Date**	06/13/2009 1630
Modified	05/04/2009 0806 - ^PER Coordinator	**New Due Date**	06/17/2009 1630
Modified	04/29/2009 1007 - ^PER Coordinator	**New Due Date**	05/01/2009 1630
SUB TASK HISTORY			
No Subtasks			

-- end of report --

Message

From: Maciuca, Constantin
Sent: Wednesday, July 15, 2009 1:08 PM
To: Parnell, William L (Bill); ^WRPS Corrective Action Group
Cc: Reynolds, Tammy R
Subject: RE: PER EXTENSION WRPS-PER-2009-0802

I concur with the extension as requested.

Tino Maciuca, Manager
Performance Assurance & CAM
509-373-6334
509-438-9519 (cell)

From: Parnell, William L (Bill)
Sent: Wednesday, July 15, 2009 11:15 AM
To: ^WRPS Corrective Action Group; Maciuca, Constantin
Cc: Reynolds, Tammy R
Subject: RE: PER EXTENSION

Your information below is correct. I cannot account for the lack of action taken by the previous owner of this PER, I can only work on the items that we are currently responsible for. We are working on the items based on the priority of the issue. You should not be holding us hostage because someone else did not perform their action.

From: ^WRPS Corrective Action Group
Sent: Wednesday, July 15, 2009 11:01 AM
To: Maciuca, Constantin; ^WRPS Corrective Action Group
Cc: Reynolds, Tammy R; Parnell, William L (Bill)
Subject: RE: PER EXTENSION
Importance: High

This PER resolution was due 6-13-09, making it 32 days past due. It is currently 72 days old and will be 116 day old at resolution completion.

Thanks...As always, please call if you have questions

Linda RB Glaman
Operations Support Specialist/CAM
376-1776/376-6249
2750E/A-208/R2-87

"The only stupid question is the one that remains unasked"

From: Parnell, William L (Bill)
Sent: Wednesday, July 15, 2009 10:48 AM
To: ^WRPS Corrective Action Group
Cc: Reynolds, Tammy R
Subject: PER EXTENSION

Please extend WRPS PER 2009-0802 until 8/28/2009 to allow the formal cause analysis to be completed.

Save

Problem Evaluation Request (PER)

WRPS-PER-2009-0805
Closed 05/05/2009 10:15

PER No	Date of Discovery	Time of Discovery (24:00)	Project
WRPS-PER-2009-0805	04/24/2009	15:00	ATS/222-S

Location

219S

How Was Problem Discovered

General Observation

Description of Concern or Problem

An issue came up regarding whether or not a Radiological Work Permit (RWP) was required in a Radioactive Material Area (RMA) while counting tech smears for release of tools and equipment from the P-9 pump job in 219-S. A Radiological Stop Work per article 345 of HNF-5183, Rev.2, was issued until the concern could be resolved.

Requirement Not Satisfied	Source Document Number

Equipment Identification Number	System Identification

Immediate actions Taken or Planned

The Base Operations Radiological Control Manager met with the employee to understand the issue. Based on this meeting the RCM agreed that this work needs to be covered on an RWP. The worker was satisfied with the response, and subsequently with Operations Line Management concurrence, the Radiological Stop Work was lifted. As a result of this concern RWP S-606 was reinstated to support outside activates, such as counting tech smears in an RMA.

Recommended Corrective actions

Recommend this PER be assigned to P.B. Brannan as a Trend Only.

Originator Contact

No

Originators Name	Originators ID	Originators Phone	Date Initiated
Brannan, Patrick (Brad)	H0002964	(509) 373-4564	04/29/2009

SHIFT OPERATIONS REVIEW

Title

A Radiological Stop Work per article 345 at 219-S

How Discovered	Agency
self-ID result of event	

Reportability	SSC Operability	Operability Review	Comp Measures Req
Non-Reportable	N/A	N/A	

Describe actions Taken or Recommended

None at this time

SO Reviewer Name	SO Reviewer ID	SO Reviewer Phone	SO Review Date
Greenough, Keith J	H0068375	(509) 373-9541	04/30/2009

SCREENING

PER Significance Level	
Trend Only	

Independent Assessment Review	Occurrence Report Number	Externally Identified	
No		No	

Assigned Responsible Manager	Facilities Rep / SSO	Safety Management Rep	
Brannan, Patrick (Brad)			

Program		**Safety Management Program**	
• N/A		• Radiological Control	
PER Screening Comments			
See immediate actions taken (Nancy Brown 05/04/09)			
Causal Code			
MGT/Comm/Train	**Human Performance**	**GEMS**	**Equip/Eng/Other**
Failed Barrier	**ORPS Code**	**Functional Area**	**Work Process**
	Not Applicable	Radiation Protection	• Radiological Work Planning
ISMS	**Consequence Code**		
Perform work within the controls	• Rad WorkPlan - RWP - RWP does not contain required information, or was inadequate to address conditions • Stop Work Authority - Employee "Stop Work Authority" used because of actual or potential unsafe conditions.		
PER Screening Chair	**PER Screening Chair ID**	**PER Screening Chair Phone**	**PER Screening Date**
Brown, Nancy L	H0088797	(509) 373-0992	05/04/2009
PAAA REVIEW			
PAAA Screening	**PAAA Codes**	**Function Codes**	
Not subject to PAAA			
NTS Report Number	**NTS Report Date**		
Repetitive / Recurrent	**Programmatic**	**Intentional Violation / Misrepresentation**	
No	No	No	
PAAA Screening Comments			
PAAA Reviewer Name	**PAAA Review Date**		
Anderson, Craig E	05/04/2009		
PAAA Approver Name	**PAAA Approve Date**		
Anderson, Craig E	05/05/2009		
SENIOR MANAGEMENT REVIEW/CONCURRENCE			
TF Operations Morning Leadership Call			
N/A			
Instructions for Responsible Manager			
Senior Management	**Sr Mgmt ID**	**Sr Mgmt Phone**	**Sr Mgmt Review Date**
Brown, Nancy L	H0088797	(509) 373-0992	05/05/2009
ATTACHMENTS			
Link to PER			

-- End of Report --
05/05/2009 10:15 AM

Task# WRPS-PER-2009-0805			
E-STARS[R] Report Task Detail Report 05/05/2009 1015			
TASK INFORMATION			
Task#	WRPS-PER-2009-0805		
Subject	TREND; Radiological Stop Work per article 345 at 219-S		
Parent Task#		Status	CLOSED 05/05/2009
Reference		Due	05/01/2009
Originator	^PER Coordinator	Priority	Medium
Originator Phone		Category	PER
Origination Date	04/29/2009 1148	Generic1	None
Remote Task#		Generic2	None
Deliverable	PER Review	Generic3	None
Class	None	View Permissions	Global
Instructions	*No Instructions*		
ROUTING LISTS			
1	Review Initial PER		Inactive
	Review New PER		
	• ^SO(Greenough, Keith J) - Review - Concur with comments - 04/30/2009 1109 *Instructions:*		
	• ^PER Screening(Brown, Nancy L) - Review - Concur - 05/04/2009 1506 *Instructions:*		
	• ^Mgr Review(Brown, Nancy L) - Review - Concur - 05/05/2009 0919 *Instructions:*		
ATTACHMENTS			
Attachments	1. Link to PER		
COMMENTS			
Poster	^SO (Greenough, Keith J) - 04/30/2009 1109		
	Concur		
	ATS so screen completed		
TASK DUE DATE HISTORY			
Modified	04/29/2009 1148 - ^PER Coordinator	New Due Date	05/01/2009 1630

Task# WRPS-PER-2009-0805
SUB TASK HISTORY
No Subtasks
-- end of report --