This document was too large to scan as a single document. It has been divided into smaller sections.

Section 5

Document Information			
Document #	FOIA-2009-0051	Revision	
Title	FREEDOM OF INFORMATION ACT REQUEST (FOI 2009-0051)		
Date	09/09/2009		
Originator	RIEHLE DC	Originator Co.	DOE-RL
Recipient	CARPENTER T	Recipient Co.	HANFORD CHALLENGE
References			
Keywords	OCE, FOIA, SENSITIVE, PRIVATE CITIZEN		
Projects			
Other Information			

Save

Problem Evaluation Request (PER)

WRPS-PER-2009-0868
In Process/Work

PER No	Date of Discovery	Time of Discovery (24:00)	Project
WRPS-PER-2009-0868	05/04/2009	08:00	Day Ops-E

Location

OTHER

How Was Problem Discovered

General Observation

Description of Concern or Problem

RADIOLOGICAL STOP WORK was issued on TF-001 for inadequate radiological controls and potential release to the environment. This pertains to the Job Coverage Section of TF-001 where the requirements of Continuous and Intermittent Coverage were being waved for certain work to allow only a checkout required for HPT support.

Requirement Not Satisfied	Source Document Number

Equipment Identification Number	System Identification

Immediate actions Taken or Planned

Notified management.

Recommended Corrective actions

Stop Work was lifted with concurrence to make a new revision to TF-001and to insure that these cabinets are added to the weekly survey prior to lifting coverage requirements. Also cabinets in question need to be inspected and appropriately labeled for electrical hazard. If needed a qualified electrician will be supplied for the routine. Also these cabinets or work areas will be evaluated for potential of changing conditions for radiation and contamination prior to downgrading the coverage requirements for intermittent and continuous coverage. Changes to RWP are suppose to be completed in a week. Also a turnover to maintenance pics and managers to help with understanding the coverage requirements until changes to survey routines can be implemented and the definition of intermittent and continuous coverage doesn't necessarily mean that a checkout is sufficient.

Originator Contact

I would like to review the the corrective actions at closure to ensure they were effective

Originators Name	Originators ID	Originators Phone	Date Initiated
Chrystal, Carrol R	H0063087	(509) 373-2526	05/04/2009

SHIFT OPERATIONS REVIEW

Title

RADIOLOGICAL STOP WORK

How Discovered	Agency
self-ID prior to event	

Reportability	SSC Operability	Operability Review	Comp Measures Req
Non-Reportable	N/A	N/A	

Describe actions Taken or Recommended

No additional Base Ops Shift Office actions required at this time.

SO Reviewer Name	SO Reviewer ID	SO Reviewer Phone	SO Review Date
Johnson, Brian A	H0003531	(509) 373-2696	05/04/2009

SCREENING

PER Significance Level	
TUF	

Independent Assessment Review	Occurrence Report Number	Externally Identified	
No		No	
Assigned Responsible Manager	**Facilities Rep / SSO**	**Safety Management Rep**	
Brannan, Patrick (Brad)			
Program		**Safety Management Program**	
• N/A		• Radiological Control	
PER Screening Comments			
See recommended corrective actions (Nancy Brown 05/05/09)			
Causal Code			
MGT/Comm/Train	**Human Performance**	**GEMS**	**Equip/Eng/Other**
Failed Barrier	**ORPS Code**	**Functional Area**	**Work Process**
	Not Applicable	Radiation Protection	• Radiological Work Planning
ISMS	**Consequence Code**		
Provide feedback and continuous improvement	• Rad WorkPlan - RWP - RWP does not contain required information, or was inadequate to address conditions • Stop Work Authority - Employee "Stop Work Authority" used because of actual or potential unsafe conditions.		
PER Screening Chair	**PER Screening Chair ID**	**PER Screening Chair Phone**	**PER Screening Date**
Brown, Nancy L	H0088797	(509) 373-0992	05/05/2009
PAAA REVIEW			
PAAA Screening	**PAAA Codes**	**Function Codes**	
PAAA, Non-NTS Reportable	• 10 CFR 830.122 (d)(1)	• Procedure Quality • RadCon Monitoring	
NTS Report Number	**NTS Report Date**		
Repetitive / Recurrent	**Programmatic**	**Intentional Violation / Misrepresentation**	
No	No	No	
PAAA Screening Comments			
PAAA Reviewer Name	**PAAA Review Date**		
Anderson, Craig E	05/05/2009		
PAAA Approver Name	**PAAA Approve Date**		
Anderson, Craig E	05/06/2009		
SENIOR MANAGEMENT REVIEW/CONCURRENCE			
TF Operations Morning Leadership Call			
N/A			
Instructions for Responsible Manager			
Review the PER and determine action required. Complete action and enter statement on TUF tab. 'Complete' the task in E-STARS in accordance with TFC-ESHQ-Q_C-C-01, Problem Evaluation Request.			
Senior Management	**Sr Mgmt ID**	**Sr Mgmt Phone**	**Sr Mgmt Review Date**

Brown, Nancy L	H0088797	(509) 373-0992	05/06/2009
Track Until Fixed (TUF)			
Action Taken			
ATTACHMENTS			
Link to PER			
AUDIT HISTORY			
Change Date	**Auditor**	**Comments**	
05/06/2009 10:26	Brown, Nancy L	Responsible Manager Task Launched by Brown, Nancy L	

-- End of Report --
07/09/2009 03:45 PM

Task# WRPS-PER-2009-0868

E-STARS[R] Report
Task Detail Report
07/09/2009 1545

TASK INFORMATION			
Task#	WRPS-PER-2009-0868		
Subject	TUF; RADIOLOGICAL STOP WORK		
Parent Task#		**Status**	Open
Reference		**Due**	09/05/2009
Originator	^PER Coordinator	**Priority**	Medium
Originator Phone		**Category**	PER
Origination Date	05/04/2009 1124	**Generic1**	None
Remote Task#		**Generic2**	None
Deliverable	PER Review	**Generic3**	None
Class	None	**View Permissions**	Global
Instructions	*No Instructions*		

ROUTING LISTS

1	Responsible Manager	Active
	Review the PER and determine action required. Complete action and enter statement on TUF tab. 'Complete' the task in E-STARS in accordance with TFC-ESHQ-Q_C-C-01, Problem Evaluation Request.	
	• Brannan, Patrick (Brad) - Assign - Awaiting Response - Due Date - 09/01/2009 1630 *Instructions:*	
	• Brannan, Patrick (Brad) - Assign - Awaiting Response - Due Date - 09/01/2009 1630 *Instructions:* Did you contact the originator about the PER? Document your contact in the response window.	
	• Brannan, Patrick (Brad) - Close - Withdrawn - 05/13/2009 1040 *Instructions:* Verify the TUF Tab and close the task when complete	
2	Review Initial PER	Inactive
	Review New PER	
	• ^SO(Johnson, Brian A) - Review - Concur - 05/04/2009 1833 *Instructions:*	
	• ^PER Screening(Brown, Nancy L) - Review - Concur - 05/05/2009 1327 *Instructions:*	
	• ^Mgr Review - Review - Cancelled - 05/06/2009 1026 *Instructions:*	

ATTACHMENTS

Attachments	1. Link to PER

COMMENTS

No Comments

TASK DUE DATE HISTORY

Modified	05/06/2009 1026 - ^PER Coordinator	**New Due Date**	09/01/2009 1630
Modified	05/06/2009 1026 - ^PER Coordinator	**New Due Date**	09/05/2009 1630

Task# WRPS-PER-2009-0868			
Modified	05/04/2009 1124 - ^PER Coordinator	**New Due Date**	05/06/2009 1630
SUB TASK HISTORY			
No Subtasks			

-- end of report --

Save

Problem Evaluation Request (PER)

WRPS-PER-2009-0869
In Process/Work

PER No	Date of Discovery	Time of Discovery (24:00)	Project
WRPS-PER-2009-0869	04/24/2009	00:00	Performance Assurance

Location

All Tank Farms

How Was Problem Discovered

DOE

Description of Concern or Problem

DOE Final Report on the Effectiveness of Corrective Actions for the Type A Accident Investigation of the Hanford S-102 Tank Waste Spill dated April 2009 states:

R-WC-3-1 - WRPS should complete the corrective actions identified by WRPS letter to DOE-ORP, "WRPS LLC Response to Abnormal Events Surveillance S-09-ESQ-TANKFARM-003, WRPS LLC Root and Common Cause Analysis Results," dated April 9, 2009, by the dates specified in the response, and conduct an effectiveness review by the end of fiscal year 2009.

Management needs to address radiological conduct of operations deficiencies that were evident during the S-102 response to abnormal operating conditions.

Corrective Actions Reviewed:

CHG-WC-3.1
Combine Abnormal Operating Procedures (AOP) with similar initial actions including TF-AOP-006 and -011, utilizing an Enhanced Work Planning approach, including representatives from operations, as well as Industrial Hygiene, Radiological Control, and Emergency Preparedness.

CHG-WC-3.2
Review all Abnormal Operating Procedures utilizing an Enhanced Work Planning approach including representatives from operations as well as industrial hygiene, radiological control, and emergency preparedness. Implement revisions with focus on effective flow between Alarm Response Procedures, AOPs and Emergency Response Procedures.

CHG-WC-3.3
Implement a process for safe AOP response such that planning time is minimized for event response and stabilization.

CHG-WC-3.4
Complete review of abnormal operating procedure changes utilizing table top drill format with all tank farm shifts.

Results:

Objective evidence files indicated all Abnormal Operating Procedures (AOP) were reviewed and changes were made to TF-AOPs 005, 011, 015 and 018. TF-AOP-006 was initially changed, but ultimately its actions were incorporated into TF-AOP-011 and then TF-AOP-006 was cancelled. The assessor reviewed the changes, verifying content of the changes addressed shortcomings identified in the S-102 event. An enhanced work planning approach for the change process was verified by review of concurrence organizations identified on the changes and discussions with personnel. Other AOPs (003 and 004) that were not changed, but addressed similar types of events, were also reviewed by the assessor and determined to contain adequate flow between response procedures. Records of AOP validations via table-top drill activities were evident.

Revisions to AOPs were still in progress. TF-AOP-003 had a periodic review change pending, and was currently more than two months past due (February 6, 2009) for the change. A justification for continued use was approved on February 13, 2009. Also, the corrective action specified for PER 2008-1788 of September 10, 2008, stated AOPs are currently being reviewed against changes recently completed on Alarm Response Procedures, to identify and corrective any inconsistencies between the two. Completion of the action is due on April 30, 2009.

The AOP change process itself was reviewed to verify an enhanced work process continued to be used for subsequent technical changes to AOPs and to ensure S-102 corrective actions remained identifiable in history files. A Suggestion for Continued Improvement in this area was identified (see below) for consistency in concurrence designations. Specifically, a consistent enhanced work planning/document concurrence approach should be implemented for technical changes to Abnormal Operating Procedures. The corrective actions (CHG-WC-3.1/3.2) designated for the S-102 event specified that Operations, Emergency Preparedness (TFC-OPS-OPER-C-13, Attachment A designator "EP"), Industrial Hygiene (designator "S") and Radiological Control (designator "R"), as a minimum, should be included in the AOP change process. Review of the AOP technical changes made as a result of the S-102 event identified an inconsistent approach to designation and participation of enhanced work planning participants was implemented:
• TF-AOP-005, Rev B-7, contained only an "R" review designator, although the IH Program Manager and Emergency Management/Safeguards and Security Lead also signed the change for concurrence.
• Initial revisions (C-4 and C-5) to TF-AOP-006 before it was combined with TF-AOP-011 and cancelled, contained "E" (Rev C-4, only), "R," and "S," but in each case the Emergency Management/Safeguards and Security Lead also signed the

changes for concurrence.
• TF-AOP-011, Rev B-11, contained only an "R" review designator, although the Emergency Management/Safeguards and Security Lead also signed the change for concurrence. The Safety Engineer signature was marked "N/A." Note: Revision C-0 was designated "E," "R," and "S," but was also signed by a delegate for the Emergency Preparedness Lead.
• Approval designators were not available for TF-AOP-015 (Rev B-14) and TF-AOP-018 (B-1) S-102 driven revisions, but in each case a Safety Engineer, Radiological Engineer and Emergency Management/Safeguards and Security Lead concurrence signature was evident.

The "Immediate Recovery Work" process was reviewed and discussed with personnel that would be involved in its implementation. As a result of the S-102 event, the TF-OPS-MAINT-C-01 "Emergency Recovery Work" process was renamed the "Immediate Recovery Work" process with the intent that it be used for events similar in nature to the S-102 event. Appropriately, the process has been infrequently used (personnel interviewed identified no known implementations). Perhaps because of this, personnel knowledge of the process and its application appeared limited, despite evidence of an awareness briefing having been provided to appropriate personnel in February 2008. Some personnel specified to be involved with the implementation process did not appear to be familiar with the process or their roles in it when questioned, and some demonstrated confusion as to who (by name) was being referred to as the actionee when the procedure specified the "Base Operations Manager" and/or the "ESH&Q Manager." Despite training on the process in 2008, it was evident that a number of personnel were either unfamiliar with the process or unclear on who was being designated to perform actions in the procedure (see Suggestion for Continued Improvement, below).

No entries into AOPs were observed by the review team. Therefore, effectiveness was reviewed via personnel interviews and reviews of recent PER information. The information reviewed identified issues with AOP entry and compliance:
• WRPS-PER-2009-0178 (January 27, 2009) identified an issue where TF-AOP-021 was not adequately followed;
• WRPS-PER-2009-0385 (March 11, 2009) identified a Concern and six Findings from a DOE-ORP surveillance in the area of response to abnormal events; and
• WRPS-PER-2009-0584 (April 7, 2009) identified a DOE-ORP FR Finding on failing to enter AOPs in a timely manner.
On April 14, 2009, the actions of TF-AOP-021 were not completed in their entirety when a radio announcement of the event was not made. No PER entry was made on the specifics of the non-compliance, but a PER (WRPS-PER-2009-0662) was entered identifying that TMACS was initially unaware of the shutdown.

In addition, several other procedure compliance issues have been identified in 2009:
• WRPS-PER-2009-0269 identified an instance where a step requiring engineering approval was missed in a work instruction;
• WRPS-PER-2009-0439 identified an issue where a continuous use procedure was not present when conducting the actions of the procedure; and
• WRPS-PER-2009-0471 identified where a DOE-ORP FR twice observed a procedure not being adequately followed.

The assessor noted that more than half of the recent AOP and other procedure non-compliance issues entered into the PER database were identified by oversight personnel external to the contractor's organization. TFC-ESHQ-Q_C-C-01, Problem Evaluation Request, Rev E, states, "A PER shall be initiated for conditions that require resolution, trending, cause determination, or identification and tracking of corrective actions." Since the assessors identified Senior Supervisory Watches and other supervisors and managers in the field during work activities, the assessors must assume that either these contractor oversight personnel are not recognizing procedure compliance issues that are occurring, or don't recognize the value of documenting such observations for causal determination, trending, and/or resolution. This issue was most prevalent in the case of WRPS-PER-2009-0662, discussed above, where a missed AOP step was identified by a DNFSB Site Representative. Rather than the contractor entering the item as a procedure non-compliance in PERs, the issue was entered by a TMACS Operator as an observation that TMACS was not being kept informed of alarms. As such, the significance level was designated as "PIE/CIM" ("a suggestion or industry report identifying process improvements, program enhancement, continued quality improvements, or recommendations, or used for evaluation of external lessons learned" – TFC-ESHQ-Q_C-C-01, Table 2) rather than more appropriately, a "PER with Resolution" ("An adverse condition which includes problems, such as failure to comply with the documented safety analysis, technical specifications, DOE orders, regulations, contract requirements, or administrative controls, procedures, instructions, noncompliances that adversely affect tank farm facility system hardware/software operability, reliability, or performance" - TFC-ESHQ-Q_C-C-01, Table 2). The assessor suggests the Tank Operations Contractor should ensure personnel are able to recognize procedure non-compliances and document their identification for causal determination, trending, and/or resolution.

Operations management acknowledged awareness of weaknesses in procedure compliance in general and AOPs specifically. A root and common cause analysis (WRPS Response to Abnormal Events Surveillance S-09-ESQ-TANKFARM-003) for the issues identified in WRPS-PER-2009-0385 above, and DOE-ORP Letter 09-ESQ-082, dated March 11, 2009, established three judgments of need in this area:
• Reestablish a culture committed to procedural compliance, conservative decision making, and questioning attitude;
• Perform procedure reviews for consistency and perform field observations to ensure procedure compliance and effective communications; and
• Strengthen training and qualification requirements relied upon to implement expectations.
The assessor suggests that procedure non-compliance events that have been identified since the root cause analysis has been performed should also be considered when implementing the corrective actions identified in the report (as approved/accepted by DOE-ORP).

The assessor attended the project's "CONOPS Council" meeting. Development of a conduct of operations improvement plan was discussed. The chairman of the council stated the three areas of greatest concern were procedure compliance, communication, and command and control.

Conclusions: AOP revisions to address S-102 lessons learned have been completed and validated via the table-top drill

process. Personnel continue to identify issues with AOP content, but management appears to address the issues via accepted processes, and was currently ensuring AOP consistency with Alarm Response Procedures. Consistency in the approach to selection of which organizations participate in AOP concurrence is suggested. Improvement in personnel awareness and knowledge of the "Immediate Recovery Work" process also appears warranted. Finally, procedure compliance in general, and AOP compliance in particular, remain a challenge for the organization. A root cause analysis was recently completed in this area and a conduct of operations improvement plan is in development. Approval and implementation of each should improve performance in this area. Corrective actions of this JON have been completed. However, the corrective actions have not proven entirely effective in preventing recurrence of procedure compliance issues.

Requirement Not Satisfied	**Source Document Number**
Equipment Identification Number	**System Identification**
N/A	

Immediate actions Taken or Planned

Generated this PER for evaluation of the recommendation.

Recommended Corrective actions

R-WC-3-1
WRPS should complete the corrective actions identified by WRPS letter to DOE-ORP, "WRPS LLC Response to Abnormal Events Surveillance S-09-ESQ-TANKFARM-003, WRPS LLC Root and Common Cause Analysis Results," dated April 9, 2009, by the dates specified in the response, and conduct an effectiveness review by the end of fiscal year 2009.

Originator Contact

No

Originators Name	**Originators ID**	**Originators Phone**	**Date Initiated**
Rensink, Gail L	H0021008	(509) 372-0092	05/04/2009

SHIFT OPERATIONS REVIEW

Title

Effectiveness of Corrective Actions for the Type A Accident Investigation

How Discovered	**Agency**
FACREP Surveillance	

Reportability	**SSC Operability**	**Operability Review**	**Comp Measures Req**
Non-Reportable	N/A	N/A	

Describe actions Taken or Recommended

No additional Base Ops Shift Office actions required at this time.

SO Reviewer Name	**SO Reviewer ID**	**SO Reviewer Phone**	**SO Review Date**
Johnson, Brian A	H0003531	(509) 373-2696	05/04/2009

SCREENING

PER Significance Level			
PIE/CIM			
Independent Assessment Review	**Occurrence Report Number**	**Externally Identified**	
No		Yes	
Assigned Responsible Manager	**Facilities Rep / SSO**	**Safety Management Rep**	
Gregory, Rob			

Program	**Safety Management Program**
• N/A	• ^N/A^

PER Screening Comments

Hold -- waiting for further information
(Nancy Brown 05/05/09)

PER SCREENING COMMENTS: Assign to Rob Gregory as a PIE/CIM
(Nancy Brown 05/06/09)

Causal Code			
MGT/Comm/Train	**Human Performance**	**GEMS**	**Equip/Eng/Other**
Failed Barrier	**ORPS Code**	**Functional Area**	**Work Process**
	Not Applicable	Operations	• Corrective Action Management • Procedures: Implementation, Compliance
ISMS	**Consequence Code**		
Provide feedback and continuous improvement	• Procedure - Operational - Procedure ambiguous, in error, could not be worked, was not used		
PER Screening Chair	**PER Screening Chair ID**	**PER Screening Chair Phone**	**PER Screening Date**
Brown, Nancy L	H0088797	(509) 373-0992	05/06/2009
PAAA REVIEW			
PAAA Screening	**PAAA Codes**	**Function Codes**	
Not subject to PAAA			
NTS Report Number	**NTS Report Date**		
Repetitive / Recurrent	**Programmatic**	**Intentional Violation / Misrepresentation**	
No	No	No	
PAAA Screening Comments			
PAAA Reviewer Name	**PAAA Review Date**		
Anderson, Craig E	05/06/2009		
PAAA Approver Name	**PAAA Approve Date**		
Anderson, Craig E	05/06/2009		
SENIOR MANAGEMENT REVIEW/CONCURRENCE			
TF Operations Morning Leadership Call			
N/A			
Instructions for Responsible Manager			
Evaluate suggestion, enter comments and required actions on PIE/CIM tab of the PER. Disposition in accordance with TFC-ESHQ-Q_C-C-01, Problem Evaluation Request.			
Senior Management	**Sr Mgmt ID**	**Sr Mgmt Phone**	**Sr Mgmt Review Date**
Brown, Nancy L	H0088797	(509) 373-0992	05/07/2009
CAUSE ANALYSIS			
Description of Occurrence			
Extent of Condition			
Safety Significance			
Generic Implications			
Remedial Corrective Action			

Causal Analysis, Apparent Cause and/or Root Cause Analysis

PIE/CIM

Evaluation of PIE/CIM Initiative

R-WC-3-1
WRPS should complete the corrective actions identified by WRPS letter to DOE-ORP, "WRPS LLC by the dates specified in the response, and conduct an effectiveness review by the end of fiscal year 2009.

WRPS has evaluated the recommendation provided in R-WC-3-1. All of the corrective actions outlined in, "WRPS LLC Response to Abnormal Events Surveillance S-09-ESQ-TANKFARM-003, WRPS LLC Root and Common Cause Analysis Results," dated April 9, 2009, have been entered into the Problem Evaluation Request (PER) system (WRPS-PER-2009-0385), WRPS Issues Management System. The PER process ensures adequate documentation and tracking of the corrective actions via the Electronic Suspense Tracking and Routing System (E STARS) web based tool.

It is the intent of WRPS management to ensure corrective actions assigned to Significant PER WRPS-PER-2009-0385, "WRPS Response to Abnormal Events," are completed as planned. The Base Operations organization provides an "Action Tracking Report" on a weekly basis to ensure upcoming corrective actions are communicated to action owners as well as the WRPS management team. PER TFC-ESHQ-Q_C-C-01, "Problem Evaluation Request," any changes, extensions, or revisions to the planned corrective actions require approval by the PER Responsible Manager, Executive Safety Review Board (ESRB) Sponsor, and the Price-Anderson Amendment Act (PAAA) Director.

As of June 18, 2009, status of the planned corrective actions is as follows:

- 13 of 20 corrective actions are complete
- 0 corrective actions are past due
- 1 corrective action has been extended (Justification for extension of the corrective action is provided in the attached Corrective Action Status Report)

The final corrective action assigned to WRPS-PER-2009-0385 includes an End Point Assessment. The End Point Assessment was developed per the guidance in TFC-ESHQ-Q_ADM-C-11, "Root and Common Cause Analysis and Corrective Action Planning." The scheduled completion date is February 28, 2010. The End Point Assessment was intentionally scheduled for February 2010 to allow implementation of all corrective actions, verification and validation that the corrective actions really corrected the problem, and to ensure that the actions continue to be implemented. The completed End Point Assessment will be presented to the ESRB and will require ESRB approval prior to closing the associated PER. No new additional corrective actions are warranted at this time.

ATTACHMENTS

DOE-ORP FINAL REPORT OF THE EFFECTIVENESS OF CORRECTIVE ACTIONS FOR THE TYPE A ACCIDENT INVESTIGATION OF THE HANFORD S-102 TANK

Link to PER

WRPS 0901065 R1 Letter.doc.pdf

WRPS-0901065 R1 Enclosure.pdf

WRPS-PER-2009-0385 Corrective Action Status 6-18-09.docx

AUDIT HISTORY

Change Date	Auditor	Comments
05/07/2009 09:58	Brown, Nancy L	Responsible Manager Task Launched by Brown, Nancy L

-- End of Report --
07/09/2009 03:46 PM

Task# WRPS-PER-2009-0869

E-STARS[R] Report
Task Detail Report
07/09/2009 1546

TASK INFORMATION			
Task#	WRPS-PER-2009-0869		
Subject	PIE; Effectiveness of Corrective Actions for the Type A Accident Investigation		
Parent Task#		**Status**	Open
Reference		**Due**	07/03/2009
Originator	^PER Coordinator	**Priority**	Medium
Originator Phone		**Category**	PER
Origination Date	05/04/2009 1243	**Generic1**	None
Remote Task#		**Generic2**	None
Deliverable	PER Review	**Generic3**	None
Class	None	**View Permissions**	Global
Instructions	*No Instructions*		

ROUTING LISTS

1	Responsible Manager	Active
	Evaluate suggestion, enter comments and required actions on PIE/CIM tab of the PER. Disposition in accordance with TFC-ESHQ-Q_C-C-01, Problem Evaluation Request.	
	• Gregory, Rob - Assign - Completed - 07/06/2009 1229 *Instructions:*	
2	Review Initial PER	Inactive
	Review New PER	
	• ^SO(Johnson, Brian A) - Review - Concur - 05/04/2009 1832 *Instructions:*	
	• ^PER Screening(Brown, Nancy L) - Review - Concur - 05/06/2009 1509 *Instructions:*	
	• ^Mgr Review - Review - Cancelled - 05/07/2009 0958 *Instructions:*	

ATTACHMENTS

Attachments	1. DOE-ORP FINAL REPORT OF THE EFFECTIVENESS OF CORRECTIVE ACTIONS FOR THE TYPE A ACCIDENT INVESTIGATION OF THE HANFORD S-102 TANK 2. Link to PER 3. WRPS 0901065 R1 Letter.doc.pdf 4. WRPS-0901065 R1 Enclosure.pdf 5. WRPS-PER-2009-0385 Corrective Action Status 6-18-09.docx

COMMENTS

No Comments

TASK DUE DATE HISTORY

Modified	05/07/2009 0958 - ^PER Coordinator	**New Due Date**	07/03/2009 1630
Modified	05/07/2009 0958 - ^PER Coordinator	**New Due Date**	07/03/2009 1630
Modified	05/04/2009 1243 - ^PER Coordinator	**New Due Date**	05/06/2009 1630

SUB TASK HISTORY

No Subtasks

-- end of report --

INCOMING CORRESPONDENCE COVERSHEET

CORR-2009-0104

Author	Addressee	Correspondence No.
S. Charboneau/ORP	J. M. Armstead/WRPS	0901065 DOE-ORP: 09-TOD-030

Subject: CONTRACT NO. DE-AC27-08RV14800 – U.S. DEPARTMENT OF ENERGY, OFFICE OF RIVER PROTECTION (ORP) FINAL REPORT ON THE EFFECTIVENESS OF CORRECTIVE ACTIONS FOR THE TYPE A ACCIDENT INVESTIGATION OF THE HANFORD S-102 TANK WASTE SPILL

DISTRIBUTION

Washington River Protection Solutions
WRPS Correspondence Control
JC Allen-Floyd
JM Armstead
F Beranek
HS Berman
PB Brannan
MN Brosee ((Assingee))
RE Gregory
GN Hanson
DB Hardy
GJ Johnson
WJ Johnson
EM Larock
MA Lindholm
WE Ross
KJ Rueter
SM Sax
DL Shugars
DK Smith
BR Thomas

Priority:	**NORMAL**
Assignee:	M. N. Brosee
Received:	May 14, 2009
Due Date:	6/14/2009 – Respond in writing to the listed Suggestions for Continued Improvement as directed by ORP.

WRPS Correspondence Control
For Questions call: 376-0271
Outlook Address: ^WRPS Correspondence Control

U.S. Department of Energy
Office of River Protection
P.O. Box 450, MSIN H6-60
Richland, Washington 99352

MAY 13 2009

09-TOD-030

0901065

Mr. Mike Armstead, Contract Manager
Washington River Protection Solutions LLC
2440 Stevens Center Place
Richland, Washington 99354

Dear Mr. Armstead:

CONTRACT NO. DE-AC27-08RV14800 – U.S. DEPARTMENT OF ENERGY, OFFICE OF RIVER PROTECTION (ORP) FINAL REPORT ON THE EFFECTIVENESS OF CORRECTIVE ACTIONS FOR THE TYPE A ACCIDENT INVESTIGATION OF THE HANFORD S-102 TANK WASTE SPILL

Attached is the final report from the April assessment of the Effectiveness of Corrective Actions for the Type A Accident Investigation of the Hanford S-102 Tank Waste Spill. The effectiveness assessment concluded that the corrective actions resulting from the Type A accident investigation were complete. The effectiveness assessment final report was approved by the ORP Manager on May 7, 2009.

Please respond in writing to the following Suggestions for Continued Improvement within 30 days of receipt of this letter:

- S-HE-1-1
- S-MS.1-3
- S-WC-3-1
- S-WC-3-2
- S-WC-3-3
- S-WC-3-4
- S-WC-4-1
- S-WC-4-2
- S-WC-4-3
- S-WC-4-4
- S-WC-4-7
- S-EM-60 10.1-1
- S-RCA-JON-8-1
- S-EM-62 OP.1 F-2-1

The response should include:

- The plan (including specific actions planned) for implementing the suggestions;
- the dates when the specific actions will be completed and verified; and
- the Project Issues Evaluation Reporting System tracking number for each suggestion.

This letter is not considered to constitute a change to the contract. In the event the Contractor disagrees with this interpretation, it must immediately notify the Contracting Officer orally, and otherwise comply with the requirements of the Contract clause entitled 52.243-7, "Notification of Changes."

If you have any questions, please contact me, or your staff may contact Brian A. Harkins, Director, Tank Farm Operations Division, (509) 438-0483.

Sincerely,

Stacy Charboneau

Stacy Charboneau, Assistant Manager
for Tank Farms Project

TOD:BAH

Attachment

cc w/attach:
R. G. Quirk, DNFSB
W. M. Linzau, DNFSB
H. S. Berman, WRPS
P. B. Brannan, WRPS
M. N. Brosee, WRPS
R. E. Gregory, WRPS
G. N. Hanson, WRPS
D. B. Hardy, WRPS
E. M. Larock, WRPS
M. A. Lindholm, WRPS
W. E. Ross, WRPS
S. M. Sax, WRPS
D. L. Shugars, WRPS
D. K. Smith, WRPS
WRPS Correspondence

RECEIVED
MAY 14 2009
WRPS
CORRESPONDENCE CONTROL

Attachment
09-TOD-030

Final Report on the Effectiveness of Corrective Actions for the Type A Accident Investigation of the Hanford S-102 Tank Waste Spill – April 2009

Consisting of 125 pages, including coversheet

U. S. Department of Energy

Final Report on the Effectiveness of Corrective Actions for the Type A Accident Investigation of the Hanford S-102 Tank Waste Spill

April 2009

Submitted: 5/7/09

Assessment Team Leader Date

Approved: 5/7/09

Manager, Office of River Protection Date

TABLE OF CONTENTS

Signature Page 2
Table of Contents 3
Acronyms 5
Executive Summary 7
Background/Scope 7
Results 8
Conclusions 10
Rating 11
Recommendations 12
Suggestions for Continued Improvement 12
Appendix A—Corrective Action Evaluation Forms 15
Type A Accident Investigation JONs
ENG-1 16
ENG-2 18
ENG-3 22
ENG-4 24
EM-1 27
EM-2 30
EM-3 34
HE-1 37
HE-2 41
HE-3 45
WC-1 50
WC-2 53
WC-3 56
WC-4 62
MS-1 71
MS-2 75
EM-60 Trip Report
4.0 79
6.0 81
10.1 83
11.0 86
S-102 Corrective Action Plan CH2M HILL Root Cause Analysis
JON-5 88
JON-8 92
JON-9 95
JON-13 99

Table of Contents (continued)

Emergency Response and Health Effects PERs 102
DOE ORP Self-Assessment 106
EM-62 Assessment
OP.1 F.1 110
CA.1 F-2 113
OP.1 F-2 115
OP.1 F-4 119
OP.1 SO-1 121

ACRONYMS

ALARA	As Low As Reasonably Achievable
AMH	AdvancedMed Hanford
AOP	Abnormal Operating Procedures
ATS	Analytical Technical Services
CA	Corrective Action
CAP	Corrective Action Plan
CH2M HILL	CH2M HILL Hanford Group, Inc.
CHG	CH2M HILL Hanford Group, Inc
CONOPS	Conduct of Operations
DOE	United States Department of Energy
DOE-ID	DOE Idaho Operations Office
DSA	Documented Safety Analysis
EALs	Emergency Action Levels
ECN	Engineering Change Notices
ECT	Event Coordination Team
EDT	Engineering Document Transmittals
EOC	Emergency Operations Center
EOC	Extent of Conditions
EM	Emergency Management
EMS	Emergency Medical Services
ENG	Engineering Design
EPHA	emergency planning hazards assessment
ERAP	Hanford Emergency Readiness Assurance Plan
ESQ	Environmental Safety and Quality
ESRB	Executive Safety Review Board
FH	Fluor Hanford
FLM	First Line Manager
FRI	Facility Representative Instruction
FR	Facility Representative
HAMTC	Hanford Atomic Metal Trades Council
HEPA	High Efficiency Particulate Air
HPI	Human Performance Improvement
HPT	Health Physics Technician
HQ	Headquarters
HRA	High Radiation Area
HVAC	Heat Ventilation Air Conditioning
ICP	Incident Command Post
IDMS	Integrated Document Management System
IH	Industrial Hygiene/Hygienist
IHT	Industrial Hygiene/Hygienist Technician
ISM	Integrated Safety Management
JON	Judgment of Needs
LTA	Less Than Adequate

MBAA	Material Balance Discrepancy Data
MOC	Manager On Call
MOP	Management Observation Program
MPOC	Medical Provider On Call
MS	Management System
NCO	Nuclear Chemical Operator
OA	Operational Awareness
OE	Operation Engineer
OJT	On the Job Training
ORP	Department of Energy's Office of River Protection
OSHA	Occupational Safety and Health Administration
OMSP	On-site Medical Service Provider
PER	Problem Evaluation Request
PHA	Process Hazard Analysis
PrHA	Process Hazard Analysis
PIC	Person in Charge
PISA	Potentially Inadequate Safety Analysis
QA	Quality Assurance
RA	Readiness Assessment
RCA	Root Cause Analysis
RCT	Radiological Controls Technician
RLEP	Emergency Plan Implementing Procedure
RPP	River Protection Project
RSR	Radiological Survey Report
SM	Shift Manager
SME	Subject Matter Experts
SMP	Safety Management Program
SOE	Stationary Operating Engineer (Power Operator)
SOG	Standard Operating Guidelines
SSC	Systems Structures and Components
SST	Single Shell Tank
SSW	Senior Supervisory Watch
TED	Tank Farm Engineering Division
TFC	Tank Farm Contractor
TOC	Tank Farms Operations Contractor
TOD	Tank Farms Operations Division
TSR	Technical Safety Requirements
TVIS	Tank Vapor Information Sheet
USQ	Unreviewed Safety Question
WC	Work Control
WHA	Work Site Hazards Analysis
WRPS	Washington River Protection Solutions, LLC
WTCRB	Waste Transfer Confinement Review Board

EXECUTIVE SUMMARY

BACKGROUND/SCOPE

The U.S. Department of Energy Office of Health, Safety and Security (HSS), conducted a Type A Accident Investigation ("Type A") following the July 2007 Tank S-102 waste spill at the DOE Hanford Nuclear Reservation. The Accident Investigation Board identified sixteen (16) Judgments of Need (JON) in the areas of engineering, work processes, emergency management, industrial hygiene, and management and oversight. A comprehensive corrective action plan (CAP) was developed, approved, and implemented.

In accordance with the requirements of DOE O 470.2B, *Independent Oversight and Performance Assurance Program*, DOE O 414.1C, *Quality Assurance*, and the approved CAP, an effectiveness review of the Type A corrective actions was conducted during the period April 14-24, 2009. The objective of the review was to evaluate the effectiveness of the corrective actions in addressing and correcting the underlying causes of the identified JONs and preventing their recurrence.

The assessment team, comprised of 10 federal staff from the DOE Richland Operations Office, the Office of River Protection, and the Idaho Operations Office, along with two Hanford contractors, used the standard criteria, review, and approach document detailed in the approved assessment plan to evaluate effectiveness of corrective actions. The results of the effectiveness reviews for each JON/Finding reviewed are detailed in Attachment A.

There were a total of 207 corrective actions within the scope of this review. The review team completed a 100 percent effectiveness review of all 16 Type A corrective actions (95 corrective actions). A number of other assessments were conducted as a result of the S-102 event. The following assessment corrective actions were also included in the scope of this review (the first four reviews listed were included in the November 21, 2007 comprehensive Type A CAP):

- EM-60 Trip Report Response
- S-102 Corrective Action Plan CH2M HILL Root Cause Analysis (RCA)
- Listing of Issues Identified by the Event Response and Health Effects Reports
- DOE-ORP Corrective Action Plan for ORP Self-Assessments
- EM-62 Hanford Site River Protection Assessment Report (March 2008)

RESULTS

Corrective actions were completed according to the approved CAP: During this review, 100 percent of the 95 corrective actions from the Type A CAP were reviewed by the assessment team. In all, 167 of the 181 corrective actions from the Comprehensive Type A CAP were reviewed and all 167 of those reviewed were completed as committed to in the CAP. Additionally, 26 actions were reviewed as part of this assessment at the request of the ORP Manager, associated with the March 2008 EM-62 assessment report. Some corrective actions were not reviewed due to time constraints and as permitted by DOE O 414.1C, *Quality Assurance* (i.e. paragraph 2.d.(2)(c).1 of Attachment 4 to the Order states: "A 100 percent review of all corrective actions is not required to determine effectiveness"). Corrective actions not reviewed included two actions for the EM-60 Trip Report (EM-60 13.0—retrieval pump design suggestions and training), and 12 actions associated with the CH2M HILL RCA (JON-9—ALARA design reviews, and JON-12--process control plans) were not reviewed. The team did note that the TFC completed a formal end-point assessment that evaluated the effectiveness of these actions. During the review, the assessment team identified that some documentation for adequate closure was not readily available in the objective evidence files and had to be requested during the review.

Corrective actions were effective in preventing recurrence of the JON/Finding: For each JON, Finding and Issue related to the S-102 comprehensive CAP, the corrective actions were effective in preventing recurrence of the identified issues, except for one Type A JON, WC-3, which was evaluated as partially effective (recommendation for completion provided). Overall, however, the Type A Comprehensive CAP was effective in preventing recurrence of the identified issues.

Corrective actions implemented as a result of the S-102 Tank Waste Spill were institutionalized and remain in place after contract transition from the TFC to the TOC: In all cases, the review team determined that the corrective actions implemented as a result of the S-102 comprehensive CAP were institutionalized into procedures that remain in place at the time of this review. Therefore, the change in contractors at the Hanford site has had no adverse effect on the implementation of the S-102 corrective actions.

Listed below, is a summary of the effectiveness of the corrective actions for each JON/Finding. In some cases, although the corrective actions may have been effective, assessors identified opportunities for continued improvement; these are provided as "Suggestions for Continued Improvement"; these "suggestions" should be evaluated and action taken where deemed appropriate. Where the corrective actions were determined to be partially effective, a "Recommendation" is provided for additional action and is fairly self-explanatory; this "Recommendation" should be tracked through the contractor's corrective action management system.

Summary of Results Listed by Jon/Finding

Type A

ENG-1	Effective
ENG-2	Effective with 1 Suggestion for Continued Improvement
ENG-3	Effective
ENG-4	Effective with 1 Suggestion for Continued Improvement
EM-1	Effective
EM-2	Effective
EM-3	Effective
HE-1	Effective with 1 Suggestion for Continued Improvement
HE-2	Effective
HE-3	Effective
WC-1	Effective
WC-2	Effective
WC-3	Partially Effective with 1 Recommendation/4 Suggested Improvements
WC-4	Effective with 7 Suggestions for Continued Improvement
MS-1	Effective with 3 Suggestions for Continued Improvement
MS-2	Effective with 2 Suggestions for Continued Improvement

EM-60 Trip Report Response

Effective with 1 Suggestion for Continued Improvement (note: EM-60 9.0 was reviewed as part of Type A JON WC-4; two actions for EM-60 13.0 were not reviewed)

S-102 Corrective Action Plan CH2M HILL Root Cause Analysis

RCA-1	Covered in Type A ENG-2 Write-up
RCA-2	Covered in Type A ENG-2 Write-up
RCA-3	Covered in Type A ENG-2 Write-up
RCA-4	Covered in Type A ENG-2 Write-up
RCA-5	Effective
RCA-8	Effective with 3 Suggestions for Continued Improvement
RCA-9	Effective with 1 Suggestion for Continued Improvement
RCA-13	Effective with 1 Suggestion for Continued Improvement

Note: Actions for the following RCA JONs were detailed in the Type A CAP—RCA-6, -7, -10, and -11. Twelve (12) actions associated with the CH2M HILL RCA (JON-9—ALARA design reviews, and JON-12--process control plans) were not reviewed due to time constraints and as permitted by DOE O 414.1C, *Quality Assurance* (i.e. paragraph 2.d.(2)(c).1 of Attachment 4 to the Order states: "A 100 percent review of all corrective actions is not required to determine effectiveness."). The team did note that the TFC completed a formal end-point assessment that evaluated the effectiveness of these actions.

Listing of Issues Identified by the Event Response and Health Effects Reports

All	Effective

DOE-ORP Corrective Action Plan for ORP Self-Assessments

All	Effective

EM-62 Hanford Site River Protection Assessment Report (March 2008)

CA.1 F-2	Effective
OP.1 F-1	Effective
OP.1 F-2	Effective with 1 Suggestion for Continued Improvement
OP.1 F-4	Effective
OP.1 SO-1	Effective with 1 Suggestion for Continued Improvement

CONCLUSIONS

Based upon the review of objective evidence files, document reviews, interviews, and work observations, the team determined the corrective actions taken to address the Type A findings have been **effective** in correcting the causes identified in the CAP and in preventing recurrence of the identified deficiencies. The corrective actions for one Type A JON, WC-3, were determined to be partially effective in preventing recurrence of the JON. One recommendation for completion is provided for JON WC-3.

This assessment focused on the Type A Comprehensive CAP and the effectiveness of those actions in preventing recurrence. As such, the review conformed to the requirements of Attachment 4 of DOE O 414.1C, *Quality Assurance*, "Corrective Action Management Program." However, because this review was extensive, consisting of a large review team and including many different programmatic areas, the review team did not summarily discount deficiencies that were outside the scope of the review. During the course of the review (and as requested by the organizations being assessed), the review team did identify some deficiencies, some of which were beyond the scope of the review. When reviewing these deficiencies in their entirety, the team concluded that there were three specific areas where the TOC should apply focused management attention (It should be noted that the first area, Conduct of Operations/Culture was directly associated with Type A JON WC-3, which has been determined to be partially effective in corrective action effectiveness):

Conduct of Operations/Culture: Based on a review of DOE Facility Representative reports, Occurrence Reports, and Problem Evaluation Requests (PER), the TOC continues to experience breakdowns in conduct of operations, including instances of procedure compliance problems. The entire TOC workforce, including first line management and above, need to operate within the fundamental principle of following and adhering to procedures as written. In order to establish this mindset and culture, the entire workforce needs to be engaged and operating within this fundamental principle to ensure success and

establish defense in depth reinforcement from the bottom up and from the top down. During the review, however, the team observed adequate conduct of operations performance and no instances of procedure non-compliance. There were many work activities observed where the jobs were stopped for procedure or material problems; this was observed by the team to be a noteworthy practice.

Contractor Assurance System: Throughout the review, the review team identified many instances where contractor self-assessment and internal oversight processes should have found and corrected many of the problems identified during this review. Although the review team did not identify programmatic failures of the contractor assurance system, the nature and number of the deficiencies identified in this report clearly indicated weaknesses in contractor self-assessment and internal oversight processes. It is critical to the success of the TOC (and also DOE) to have a robust contractor assurance system to self-identify and correct problems, and to identify opportunities for continued improvement.

Work Planning, Control, and Execution: The review team identified a number of opportunities for improvement in the work control procedure. Additionally, the team noted several instances where work did not occur due to various reasons, including training problems, material problems, procedure problems, and poor planning. Although one manager reported that the weekly work completion rate was in excess of 90 percent, the review team observed work execution/completion rates closer to 33 percent. The review team did not determine the cause for the disparity in the work completion rates. However, it was apparent that the "greater than 90 percent completion rate" may not be representative of actual work completion rates in light of work performance observed by the team. TOC management needs to evaluate how this performance metric is calculated, ensure it reflects reality, and focus attention on the area of work planning, control, and execution in order to improve performance.

RATING

Overall, the team rated the contractor as **effective** in correcting the weaknesses identified in the Type A Comprehensive CAP, with one Recommendation for additional action and several suggestions for continued improvement. Although the team identified some areas that need improvement and focus (conduct of operations, contractor assurance, work control), the results in those areas did not have an adverse impact on the overall effectiveness rating of the Type A Comprehensive CAP effectiveness. As identified in this report, the team did determine one Type A JON, WC-3, corrective actions to be partially effective; however, the overall determination by the team was that the Type A Comprehensive CAP completed actions were effective at preventing recurrence of an event similar to the July 27, 2007 S-102 Tank Waste Spill.

RECOMMENDATIONS

There was one Recommendation identified for WRPS to improve performance in conduct of operations. The team recommends that the following "Recommendation for Completion" be entered into the WRPS issues management systems and be tracked to closure:

R-WC-3-1
WRPS should complete the corrective actions to improve Conduct of Operations and response to abnormal events identified by WRPS letter to DOE-ORP, "Washington River Protection Solutions LLC Response to Abnormal Events Surveillance S-09-ESQ-TANKFARM-003, 'Washington River Protection Solutions LLC Root and Common Cause Analysis Results,'" dated April 8, 2009, by the dates specified in the enclosure, and conduct an effectiveness review by the end of fiscal year 2009 (see Corrective Action Evaluation form starting on page 56 of this report for details).

SUGGESTIONS FOR CONTINUED IMPROVEMENT

In addition to the Recommendation, the team identified 26 opportunities for continuous improvement that are identified as "Suggestions for Continued Improvement"; these are also provided in the individual Corrective Action Evaluation Forms for each JON/Finding in this report. The ORP Manager will require a formal response from WRPS to address several of the suggestions provided below; this will be addressed in the ORP letter transmitting the report to the TOC.

S-JON ENG-2-1
The WTCRB charter should require a readily accessible, retrievable record of board meeting minutes.

S-JON ENG-4-1
ORP should provide the TOC a specified date for the implementation of Safety Basis Amendment-045.

S-HE-1-1
WRPS should revise drill scenarios to include a chemical attribute that requires more in-depth IH response which may include a worker(s) in contact with tank waste, chemical spill, vapor event, etc.

S-MS.1-1
WRPS should evaluate the occurrence reporting/causal analysis processes in order to improve compliance with the requirements of DOE M 231.1-2, and to improve the timely identification and completion of corrective actions for reportable occurrences.

S-MS.1-2
DOE-ORP and WRPS should collaboratively work to improve the timeliness of final occurrence report submittals.

S-MS.1-3
WRPS should update the FY2009 Integrated Assessment Schedule such that assessments evaluating the continued efficacy of the lessons learned program are conducted.

S-MS.2-1
ORP should increase tank farm field presence of SMEs to strengthen field oversight, and to improve support to the tank farm FRs.

S-MS.2-1
ORP should consider including all QA oversight activities (surveillances) on the integrated assessment schedule (those conducted beyond the established schedule are not normally added to the schedule once completed).

S-WC-3-1
A consistent enhanced work planning/document concurrence approach should be implemented for technical changes to Abnormal Operating Procedures.

S-WC-3-2
The TOC should conduct periodic awareness/proficiency training on the "Immediate Recovery Work" process for those personnel involved in the process.

S-WC-3-3
Procedure non-compliance events identified since the issue of WRPS letter to DOE-ORP, "Washington River Protection Solutions LLC Response to Abnormal Events Surveillance S-09-ESQ-TANKFARM-003, 'Washington River Protection Solutions LLC Root and Common Cause Analysis Results,'" dated April 8, 2009, should be considered when implementing the corrective actions identified in the report.

S-WC-3-4
The Tank Operations Contractor should improve the self-identification and reporting (i.e. per the PER process) of procedure non-compliances to facilitate causal determination, trending, and/or resolution.

S-WC-4-1
The TOC should determine if and when telephone approval is acceptable for the release of minor work, and proceduralize the requirements if it is deemed allowable.

S-WC-4-2
The TOC should determine the appropriate level of radiological controls for "Immediate Recovery Work" as discussed in TFC-OPS-MAINT-C-01, *Tank Operations Contractor Work Control*; these controls must mesh with Section 4.10 of TFC-ESHQ-RP_RWP-C-04, *Radiological Work Permits* (i.e. consistent terminology—"immediate recovery" vs "emergency").

S-WC-4-3
The TOC should include a requirement to consider the need to develop industrial hygiene and safety controls in Section 4.3 of TFC-OPS-MAINT-C-01, *Tank Operations Contractor Work Control*, when preparing for "Immediate Recovery Work."

S-WC-4-4
The TOC should include definitions for "troubleshooting" and "routine work" in the work control procedure, TFC-OPS-MAINT-C-01, *Tank Operations Contractor Work Control.*

S-WC-4-5
The TOC should revise Attachment B of TFC-OPS-MAINT-C-01, *Tank Operations Contractor Work Control*, to limit use of the word "ensure" when developing work documents; "ensure" is an ambiguous action word.

S-WC-4-6
The TOC should revise TFC-OPS-MAINT-C-01, *Tank Operations Contractor Work Control*, Section 4.4.1.3, Step 7, to remove ambiguity; the step currently directs the Field Work Supervisor/worker to "Follow applicable sections" of the procedure.

S-WC-4-7
WRPS should develop and conduct work control process training with shift managers and field work supervisors.

S-EM-60 10.1-1
Standing Order 07-008 should be revised to include a statement directing the length of time the Standing Order will remain in effect, and how the requirements of the order will be captured for future projects.

S-RCA-JON-8-1
Form A-6002-909, *Verification/Validation (V&V) Checklist* should be updated to require the Technical Authority to ensure critical tasks have been identified.

S-RCA-JON-8-2
Procedure TFC-OPS-MAINT-C-01, *Tank Operations Contractor Work Control* should contain critical task guidance.

S-JON-9-1
The 241-C-110 Transfer Survey Worksheet should be a controlled document/form to ensure that transcription errors are prevented.

S-RCA JON-13.1-1
Actions that comprehensively address the issue(s) identified in the CH2MHill Root Cause Analysis Report JON 13 should be included in the closure evidence files.

S-EM-62 OP.1 F-2-1
The Tank Operations Contractor should incorporate continuing training on Technical Safety Requirements for Shift Managers; training should include the basis for each TSR, and information from the DSA including relevant accident scenarios and unmitigated consequences.

S-EM-62 OP.1 SO-1-1
Reevaluate the processes of planning, scheduling and releasing daily work items.

APPENDIX A
Corrective Action Evaluation Forms

Corrective Action Evaluation Form
Type A JON ENG 1

JON/Finding:
Type A JON ENG-1, CH2M HILL needs to improve incorporation of the design features, testing, and operating limits/ specs into operating procedures associated with the S-102 tank and the Seepex pump to ensure its ability to move S-102 waste without becoming fouled.

Corrective Actions Reviewed:

CHG-ENG-1.1
Inactivate all retrieval and transfer Procedures.

CHG-ENG-1.2
Revise and implement (implement defined as procedure verification, validation, and training) the process for preparing waste retrieval and transfer operating procedures. The process will define requirements for how design features, operating limits and criteria, and retrieval process requirements are incorporated into operating procedures, including requirements for independent verification of valves in waste transfer routes and radiological monitoring requirements associated with implementing technical safety requirements (TSRs) for leak detection. The procedure will require a review of the acceptability of testing and operating experience on the retrieval pump(s) which will be used.

CHG-ENG-1.3
Revise and implement process for new retrieval equipment development to evaluate simulant testing

Documents Reviewed:

- TFC-OPS-OPER-C-49, *Development of Waste Retrieval and Transfer Operating Procedures*
- TFC-PLN-90 Rev 2, *Technology Development Management Plan*
- Training records for classes on TFC-OPS-OPER-C-49 and TFC-PLN-90
- Active and inactive procedures database, Washington River Protection Solutions Intranet
- TO-220-113, *Over-Ground Transfer from 241-C-110 to 241-AN-106 and Sluicing of Tank 241-C-110*
- Operations/Process Control Matrix and Verification and Validation Checklist for TO-220-113

Activities/Operations Observed:

None

Interviews:

- Acting Manager, West System Engineering, Washington River Protection Solutions
- Two Procedure Technical Writer/Editors, Base Operations, WRPS

A document review of the corrective actions and evidence files indicates adequate completion of the Judgment of Need corrective actions. Follow-up interviews were conducted to assess the effectiveness of the corrective actions. The results are that the corrective actions for JON ENG-1 have been effective in addressing the Judgment of Need.

Conclusions:

The JON as written specifically addressed the use of the SEEPEX pump for tank S-102. CH2M Hill's Corrective Actions expanded the scope of the JON to all tank retrieval and transfer procedures and all retrieval equipment. This was appropriate since the SEEPEX pump in Tank S-102 will not be used again, but the process improvement will be applied to any new technologies. Corrective Action ENG 1.1 to inactivate all retrieval and transfer procedures was confirmed complete by reviewing printouts from the on-line procedures database and noting that all retrieval and transfer procedures in effect as of the corrective action plan were marked inactivated and were not available for use. Corrective Action ENG 1.2 to revise and implement the process for procedure development was confirmed complete by reviewing the revised procedure TFC-OPS-OPER-C-49 and training records. Corrective Action ENG 1.3 to revise and implement the process for developing new retrieval equipment was confirmed complete by reviewing the revised Plan TFC-PLN-90 and training records.

The effectiveness of the corrective actions was evaluated by reviewing a tank waste transfer procedure that was issued using the revised procedure development process and interviewing several procedure writers and an engineering manager. Only one procedure has been issued under the revised development process, although several more are in various stages of development. Review of the procedure's process control matrix and interviews with the procedure writers indicate that the revised development process was fully implemented and institutionalized. The revised procedure involved using a new pump, and interviews with engineering staff and the procedure writers indicate that the equipment was tested with a simulant and under conditions expected in the tank, implementing the provisions of Corrective Action ENG 1.3.

Rating:

Effective

Recommendation for Completion:

None

Suggestions for Continued Improvement:

None

Reviewer:

Earl Hughes, DOE-HQ, Office of Health, Safety and Security

Corrective Action Evaluation Form
Type A JON ENG 2

JON/Finding: Type A JON ENG-2:
CH2M HILL needs to revise its design review processes, procedures and implementation to ensure approved designs are technically correct and satisfy the requirements of the DSA.

Corrective Actions Reviewed:

CHG-ENG-2.1:
Conduct an independent review of engineering design program issues and provide recommended corrective actions to strengthen the program and its implementation. Evaluate recommendations and implement corrective actions

CHG-ENG-2.2:
Develop process hazards analysis (PHA) procedures and processes to ensure identification of hazards and controls for both TSR level hazards, and higher frequency, lower consequence hazards that are of significance for emergency response and environmental compliance with emphasis on preventive controls over mitigative controls, including process to train and assign designated personnel as lead PHA team leaders.

CHG-ENG-2.3:
Revise design review procedures, using results of independent review as a guide. Clarify roles and responsibilities, and provide detailed guidance/criteria for review of in-house and subcontracted engineering design products. Define a graded approach for design review of engineering products, including requirements for intermediate design reviews and formal disposition of review comment resolutions.

CHG-ENG-2.4:
Establish and implement a process to perform a thorough extent of condition (EOC) review for systems connected to waste storage tanks to determine potential waste transfer paths and ensure that such systems incorporate applicable TSR controls. This process will be applied to each transfer prior to operation.

CHG-ENG-2.5:
Adopt and implement a management of change process similar to that described in Occupational Safety and Health Administration (OSHA) standard 29 CFR 1910.119, *Process Safety Management of Highly Hazardous Chemicals.*

DOE-MS-2.8:
Review the existing contractor process hazard analyses and associated design features for retrieval systems to ensure nuclear safety and other safety requirements are met. This action verifies implementation of effectiveness of action CHG-2.2.

Documents Reviewed:

- CH2M-PER-2007-1738
- E-STARs Report CH2M-PER-2007-1738
- E-STARS Report CH2M-PER-2007-1738.1
- E-STARS Report CH2M-PER-2007-1738.2
- E-STARS Report CH2M-PER-2007-1738.3
- E-STARS Report CH2M-PER-2007-1738.4
- E-STARS Report CH2M-PER-2007-1738.5
- Engineering Design Program Review, dated 10/9/2007
- S-102 Type A Accident Report: Supplementary Corrective Action Closure Package, E-Stars Task#: CH2M-PER-2007-1738.2
- TFC-ENG-DESIGN-P-17, Rev C-3, Design Verification
- RPP-RPT-37883, Rev 0, Design Review Report for the C-110 Waste retrieval System
- RPP-PLAN-40419, Rev 0, Design Verification Plan 241-C-111 Waste Retrieval System
- TFC-ENG-DESIGN-C-06, Rev G, Engineering Change Control
- TFC-CHARTER-37, Rev A, Waste Transfer Confinement Review Board
- TFC-ENG-FACSUP-C-26, Rev A, Waste Leak Path Evaluations
- RPP-RPT-38246, Rev 0 and A 241 C-110 Waste Retrieval System Process Hazard Analysis
- RPP-RPT-35922, Rev 0 and A 241 C-109 Waste Retrieval System Process Hazard Analysis
- TE-08-046, Technical Evaluation
- TE-08-047, Technical Evaluation
- TE-08-048, Technical Evaluation
- Operational Awareness Report, Report #3514

Activities/Operations Observed:

None

Interviews:

- WRPS Manager, Central Design Authority and Standards
- WRPS Engineering Program Specialist, Central Design Authority and Standards
- WRPS Nuclear Safety and Licensing Engineer (2)
- WRPS C-Farm Engineering Manager
- WRPS C-Farm Project Engineer
- WRPS Chairman, Waste Transfer Confinement Review Board
- WRPS Quality Assurance Engineer

Results:

A document review of the finding corrective actions and evidence files supporting completion of required actions indicate that all corrective actions have been adequately completed. Follow-up interviews were conducted to assess the effectiveness of the corrective actions to address the issues identified by JON ENG-2. The results are that the corrective actions for JON ENG-2 have been effective in addressing the Judgment of Need.

The design program independent review identified a need for independent and peer reviews, a reconstitution of the Design Authority position, and a management of change process for those design and process changes which are evaluated from a process safety perspective and do not require entry into the USQ process.

New process hazard analysis procedure TFC-ENG-DESIGN-C-35, "Process Hazard Analysis" and TFC-ENG-STD-28, "Process Hazard Analysis Standard" were developed to strengthen considerations of "impact of change on safety and health." Further enhancements to the PrHA process were developed that integrated the process hazard analysis process and the management of change process (ENG-2.5). DOE conducted a review of the PrHA process as part of the Type A CAP MS-2.8 in Operational Awareness Report #3514. The report stated that the PrHA process was adequate in evaluating processes for their impact on safety and health.

The development of the PrHA procedure and standard allows work process changes to be evaluated separately from (but not in lieu of) the safety basis development process. The process considers the complete spectrum of normal, abnormal, process upset, and accident conditions. The PrHA process requires project or individual Engineering Document Transmittals (EDTs) or Engineering Change Notices (ECNs) to be screened to determine whether a PrHA is required to assess the impact of the change. Screening also identifies the appropriate technique to evaluate the change. Review of training attendance rosters indicated that an adequate pool of personnel have been trained on the PrHA process. Review of waste retrieval system process hazard analyses indicate the PrHA process has been implemented and conforms to the expectations of the corrective actions. In addition, the PrHA reports reviewed were thorough and comprehensive. Effectiveness of ENG-2.2 is evident by the several PrHA sessions held that have afforded the opportunity for the identification of new accident scenarios, initiating causes and consideration of the appropriateness of existing controls.

At the time of the S-102 event, all engineering design was subcontracted to outside engineering firms. This is still the current practice. The Design Verification procedure was revised to clarify roles and responsibilities, provide detailed guidance for review of in-house and subcontracted engineering design products, define a graded approach for design review of engineering products, and require formal disposition of review comment resolutions. In addition, revisions were made to the Design Review Checklist to include an item for liquid waste handling systems and components and enhance considerations of credible non-standard conditions.

Prior to the S-102 event the design review team consisted of members of the integrated project team (project engineers, SMEs, nuclear safety engineers, operations personnel, etc.) and design reviews did not require formal documentation of comments, questions, or resolutions. The revised implemented design verification process requires an independent senior lead discipline engineer to participate on the design review team to provide independent and broad oversight of the review and requires formal comment resolution. The assessment team reviewed a design review report completed under the new process. It conformed to the expectations of the revised design verification procedure and appropriate engineering discipline leads were assigned to the review team. Comments documented on a completed Review Comment Record reviewed were logical and focused on compliance with requirements and requests for clarifications. One comment referenced the S-102 event indicating the consideration of past events and how they may apply to current designs and planned activities and is an indication of the effectiveness of ENG-2.1 and 2.3. All comments were formally resolved and recorded. Personnel interviewed

expressed confidence with the modifications made to the design process and that changes have not created a major impact on schedule.

Development of the Waste Leak Path Evaluations procedure provides the tools and methodology for engineers to perform technical evaluations of waste transfer retrieval system interfaces through which waste could be released. The Waste Transfer Confinement Review Board (WTCRB) was developed to provide the final check in the waste transfer process to verify design, routing, and interfaces. The WTCRB convenes prior to each waste transfer activity (approximately 10 transfer activities to date). All transfers since the S-102 event forward have undergone technical evaluation and review by the WTCR. A WTCRB quorum is one chairperson and one other member, both appointed by the Chief Engineer, but typical attendance at the WTCRB meetings includes SMEs and multiple engineering discipline personnel. Although the charter does requires WTCRB meeting minutes to be recorded, only the chairperson of the WTCRB personally maintains hand written meeting minutes for all previously held WTCRB meetings. As evidence of the effectiveness of ENG 2.4, early in the implementation of the WTCRB, several leak paths were identified that were not previously identified during design reviews or that were identified but inadequately dispositioned. These involved waste conveyance through electrical cables and the waste jet momentum leak scenario. The product of the waste transfer leak path process is a completed technical evaluation endorsed by the WTCRB.

Conclusion: The corrective actions as approved have been completed as described. Based on a review of documentation and discussions and interviews the reviewer has concluded that the completed corrective actions have been effective in addressing the JON ENG-2. This review also included an evaluation of the effectiveness of CH2M Hill Root Cause Analysis JONs 1, 2, 3, and 4.

Rating:

Effective

Recommendation for Completion:

None

Suggestions for Continued Improvement:

S-JON ENG-2-1
The WTCRB charter should require a readily accessible, retrievable record of board meeting minutes.

Reviewer:

Jacquelyn Carrozza, DOE-ID, Nuclear and Safety Performance

Corrective Action Evaluation Form
Type A JON ENG 3

JON/Finding:
Type A JON ENG-3, CH2M HILL needs to perform an engineering analysis of whether the S-102 pump can continue to be safely operated following the deformation that occurred when excessive shaft torquing was applied during maintenance.

Corrective Actions Reviewed:

CHG-ENG-3.1
Inactivate the retrieval S-102 pump.

CHG-ENG-3.2
Issue a lessons learned bulletin addressing the inadequate documentation and communication of the planned risk to be taken with the Seepex pump.

Documents Reviewed:

- CH2M Hill Problem Evaluation Request CH2M-PER-2007-1739 Rev 1
- CH2M Hill Engineering Change Notice 75287, *Inactivate the S-102 Retrieval Pump at Riser 7*
- CH2M Hill Engineering Change Notice 724596, *Removal of S-102's Retrieval Instrumentation and Electrical Power Systems*
- CH2M Hill Engineering Change Notice 724952, *S-102 Equipment Removal Closeout Inspection*
- Tank Farm Work Instruction CLO-WO-07-1340, *S-102 Remove Contaminated Equipment around R-7*
- Tank Farm Work Instruction CLO-WO-07-1545, *S-102 Dispose of Equipment outside the High Radiation Area*
- Tank Farm Work Instruction CLO-WO-07-1840, *S-102 Change Breather Filter to Radial Filter*
- CH2M Hill Lessons Learned Bulletin IB-07-040
- TFC-OPS-MAINT-C-01, REV N-9, *Tank Operations Contractor Work Control*
- TFC-ENG-FACSUP-C-02, REV B-10, *Operability/Technical Evaluations*
- 3-LDD-055, *Troubleshooting and Repair of Liquid Detector*
- Tank Farm Work Instruction TCF-09-1192, *Replace and test LD3 Relay on AW02D-WT-LDST-188*
- Tank Farm Work Instruction TFC-WO-09-1425, *Troubleshoot Low Insulation Resistance in AN Tank Farm*
- Tank Farm Work Instruction TFC-WO-09-1446, *241-AN VTP A-train Trouble Shoot Flow Sample System*

Activities/Operations Observed:

None

Interviews:

- Acting Manager, West System Engineering, Washington River Protection Solutions
- Manager, Base Operations Work Planning, Washington River Protection Solutions

Results:

A document review of the corrective actions and evidence files indicates adequate completion of the Judgment of Need corrective actions. Follow-up interviews were conducted to assess the effectiveness of the corrective actions. The results are that the corrective actions for JON ENG-3 have been effective in addressing the Judgment of Need.

Conclusions:

The action of the Judgment of Need (JON) as written was not carried out, but appropriate alternative actions were taken. The Original JON called for an engineering analysis to determine if the SEEPEX pump could be safely used following its overtorquing. Instead, DOE determined that the Tank S-102 retrieval work would be done with different equipment and techniques, so the pump was permanently inactivated. This obviated the need for an engineering analysis of the safety of its return to operations. During the initial analysis of the pump overtorquing, CH2M Hill realized that they should have better documented the engineering decisions they made when deciding to use torque beyond the manufacturer's recommendations. This led to the corrective action to issue a Lesson Learned Bulletin regarding the SEEPEX pump overtorquing decisions. The concepts of the Lesson Learned Bulletin are incorporated in procedures, and review of subsequent work packages and interviews with engineering and work planning staff indicate it is institutionalized.

Rating:

Effective

Recommendation for Completion:

None

Suggestions for Continued Improvement:

None

Reviewer:

Earl Hughes, DOE-HQ, Office of Health, Safety and Security

Corrective Action Evaluation Form
Type A JON ENG 4

JON/Finding:
Type A JON ENG-4, The safety basis needs to be changed by CH2M HILL/ORP to require that new primary pressure boundaries for S-102 be classified as Safety Significant. Existing S-102 installed systems, structures, and components need not be upgraded from their current classification, but should be treated nonetheless, to the maximum extent practical, as if they were Safety Significant

Corrective Actions Reviewed:

CHG-ENG-4.1
Conduct a control decision meeting, including CH2M HILL and ORP, to determine a revised control strategy for S-102 leaks (with potential application to other waste transfer leaks). The focus of the control strategy will be leak prevention in preference to leak mitigation. The control decision process will consider the safety designation of new and existing equipment as well as other controls that may be applied to prevent and/or mitigate waste leaks. The new control strategy will comply with existing DOE requirements, including DOE STD 3009 and 10 CFR 830. Based on the outcome of the control decision meeting, CH2M HILL will develop a safety basis amendment for submittal to ORP.

CHG-ENG-4.2
Review and approve submitted safety basis amendment as appropriate

Documents Reviewed:

- Tank Farms DSA, RPP-13033 REV 3
- Tank Farm DSA, RPP-13033 REV 2, ECN 725337 (Safety Significant waste transfer system)
- Tank Farm DSA, RPP-13033 REV 2, ECN 725645 (Waste Leak Evaluation Program)
- Tank Farms TSR, HNF-SD-WM-TSR-006, Rev 6
- Tank Farms TSR, HNF-SD-WM-TSR-006 REV 5, ECN 724337 (Safety Significant waste transfer system)
- Tank Farms TSR, HNF-SD-WM-TSR-006 REV 5, ECN 725645 (Waste Leak Evaluation Program)
- Letter S. J. Olinger to J. C. Fulton, 08-NSD-036, Approval of Safety Basis Amendment-045, For Safety-Significant Designation of Waste Transfer Primary Piping Systems Required by Corrective Action for JON ENG-4.1, dated July 18, 2008
- Klein, K. A., and R. J. Schepens, 2003, "Replacement of Previous Guidance Provided by RL and ORP," (letter 03-ABD-0047/0300642 to E. K. Thomson, Fluor Hanford, Inc., and E. S. Aromi, CH2M HILL Hanford Group, Inc., February 4), U.S. Department of Energy Richland Operations Office, and Office of River Protection, Richland, Washington.
- Interoffice Memo, CH2MHILL, 7G500-LJK-08-001, Control Decision Meetings Summary, January 9, 2008
- Letter J. C. Fulton to S. J. Olinger, CH2M-0800784, Submittal of the Safety Basis Changes for Safety Significant Designation of Waste Transfer Primary Piping Systems Required by the Corrective Action for JON ENG-4.1, March 30, 2008

- Letter J. C. Fulton to S. J. Olinger, CH2M-0800784 R1, Re-Submittal of the Safety Basis Changes for Safety Significant Designation of Waste Transfer Primary Piping Systems Required by the Corrective Action for JON ENG-4.1, July 9, 2008
- TFC-ENG-SB-C-06, Rev F-1, Safety Basis Development, December 21, 2005
- Letter from Klein and Schepens to Thomson and Aromi, 03-ABD-0047, Nuclear Safety Risk Ranking and Control Selection Guidelines, February 04, 2003
- RPP-RPT-32094, *Integrity Assessments for 241-C-108 Waste Retrieval Project.*
- RPP-RPT-34052, *Integrity Assessments for 241-C-109 Waste Retrieval Project.*
- PER CH2M-PER-2007-1740
- E-STARS Report CH2M-PER-2007-1740, CH2M-PER-2007-1740.1
- Causal Analysis for Type A Investigation Action ENG-4
- Letter W. Johnson to S. J. Olinger, WRPS-0900038, Request for Approval of Safety Basis Amendment to Add TSR AC 5.19, "Waste Leak Evaluation Program," dated Jan 22, 2009

Activities/Operations Observed:

None

Interviews:

- Nuclear Safety and Licensing Engineer (3)
- Manager, Nuclear Safety

Results:

A document review of the corrective actions and evidence files indicates adequate completion of the Judgment of Need corrective actions. Follow-up interviews were conducted to assess the effectiveness of the corrective actions.

The corrective actions focused on revising the control strategy for S-102 leaks, particularly waste transfer leaks. The control selection meetings focused on leak prevention vs leak mitigation. Although the hierarchy of control decision preference of preventative controls over mitigative was part of the Tank Farm Safety Basis control strategy prior to the S-102 event, the safety basis controls selected for waste transfer systems did not consistently select preventive and engineering controls in preference to mitigative and administrative controls when applied to new or upgraded equipment.

Safety significant designation of the primary confinement boundary for all tank farm waste transfer systems resulted from the control decision meetings. This included new systems which was the expectation of the JON and grandfather existing systems that conform to the requirements of *Washington Administrative Code* (WAC) 173-303-640, "Tank Systems." TSR level controls were developed to ensure the safety function of waste transfer primary piping systems.

The Tank Farms Safety Basis Amendment (SBA)-045 was approved by ORP nine months ago, on July 18, 2008, but neither the approval letter nor the Safety Evaluation Report (SER) provided implementation direction to the contractor. Although WRPS "expects" to implement the SBA by

September 30, 2009, ORP should provide the TOC a specified date for the implementation of Safety Basis Amendment-045. System integrity assessments and the Independent Qualified Registered Professional Engineer [IQRPE] certification for all systems authorized to transfer waste have been completed.

Additional improvements to the tank farm safety basis documents included updates to reflect current tank farm operations; removal of ambiguities; clarifications to definitions and the development of a TSR Programmatic Administrative Control (AC) for the Waste Leak Evaluation Program to identify and evaluate potential waste leaks or releases from tank farm facilities and operations (approved by ORP on April 20, 2009). The Waste Leak Evaluation Program was developed and implemented following the S-102 event and was submitted for approval as a TSR level programmatic administrative control January 2009. Key elements of the waste leak evaluation program requires the technical evaluations of potential motive forces and leak paths that could result in waste leaks from waste transfer systems and waste releases outside tanks from operations and equipment.

In October 2008, CH2M Hill commenced a Tank Farm DSA/TSR upgrade effort as part of a DSA improvement Plan. The update will implement DOE STD 3009 CN3 and DOE STD 1186 Specific Administrative Controls and involves the revision of the hazard analysis database, implementation of the methods and key elements of the waste leak evaluation program, and the evaluation of controls selection through conducting control decision meetings.

Conclusions:

The corrective actions as approved have been completed for JON ENG 4. The corrective actions have been effective in identifying and addressing weaknesses in the tank farm safety basis document and improving the control strategy. In addition, development and implementation of the Waste Leak Evaluation Program in conjunction with safety significant designation of the primary confinement boundary for all tank farm waste transfer systems and TSR level controls to ensure safety SSC performance are effective in reducing the probability of a leak in the waste transfer system.

Rating:

Effective

Recommendation for Completion:

None

Suggestions for Continued Improvement:

S-JON ENG-4-1
ORP should provide the TOC a specified date for the implementation of Safety Basis Amendment-045.

Reviewer:

Jacquelyn Carrozza, DOE-ID, Nuclear and Safety Performance

Corrective Action Evaluation Form
Type A Jon: EM-1

JON/Finding:
JON/ EM-1 - *Type A Accident Investigation Report* - CH2M HILL needs to analyze events of higher probability but lower consequence in the tank farms emergency planning hazards assessment, covering the full range of possible initiators and severity levels as required by DOE Order 151.1C, Comprehensive Emergency Management System, and it predecessors. Analysis needs to provide adequate documentation of assumptions.

Corrective Actions Reviewed:

CHG-EM-1.1
Type A Accident Investigation Report, Develop a documented process to evaluate the output of PHAs for higher probability, lower consequence hazards (see action CHG-ENG-2.2) in accordance with DOE Order 151.1C, *Comprehensive Emergency Management System*. The process will ensure that AOPs and emergency response procedures adequately address high probably, low consequence events.

CHG-EM-1.2
Type A Accident Investigation Report, Revise TFC-OPS-EP-D-04, Emergency Management Program Assessment Plan Guidance, to incorporate hazard assessment requirements of DOE G 151.1-2, *Technical Planning Basis*.

CHG-EM-1.3
Type A Accident Investigation Report, Issue a lessons learned on potentially inadequate emergency action levels when high probability, lower consequence events are not evaluated.

Documents Reviewed:

- TFC-OPS-EP-D-04, *Emergency Management Program Assessment Plan Guidance*
- TFC-ENG-DESIGN-C-36, *Hazards Assessment Consequence Calculation Process*
- FY2008-CH2M-I-0007, *Corrective Action Plan Implementation for Tank 241-S-102 Waste Spill End Point Assessment*
- FY2008-CH2M-I-0003, *S-102 Midpoint Assessment*
- DOE Order 151.1C, *Comprehensive Emergency Management System*
- DOE G 151.1-2, *Technical Planning Basis*

Activities/Operations Observed:

- April 7, 2009 AP Tank Farm High Efficiency Particulate (HEPA) Filter Failure Drill
- April 7, 2009 Radiological Waste Container Handling Accident Drill
- April 16, 2009 Emergency Preparedness C-110 Tabletop Drill

Interviews:

- IH Technician (2)
- Electrician (3)
- Nuclear Chemical Operator (2)
- Manager, IH Programs
- Manager, Training
- Manager, Security & Emergency Services/Events Investigation
- Manager, Shift Operations
- Manager, Senior Shift
- Coordinator, Emergency Preparedness

Results:

The effectiveness review for JON EM 1 included reviewing the three corrective actions (CA), select aspects of their closure documentation, how the CAs were implemented, and if the corrective actions will be effective in preventing recurrence of the deficiency identified in this JON.

CA-1.1 developed a process to evaluate the output of PHAs for higher probability, lower consequence hazards. This was accomplished by modifying TFC-ENG-DESIGN-C-36, *Hazards Assessment Consequence Calculation Process* to address these issues. This was completed in January 2008. The assessor reviewed the current version of the document (dated November 2008) and verified the changes remained in effect.

CA-1.2 revised TFC-OPS-EP-D-04, *Emergency Management Program Assessment Plan Guidance*, to incorporate hazard assessment requirements of DOE G 151.1-2, *Technical Planning Basis*. This was completed in December 2007. The assessor reviewed the current version of the document (dated January 2009) and verified the changes remained in effect.

CA- 1.3 required the contractor to issue a lessons learned on potentially inadequate emergency action levels when high probability, lower consequence events are not evaluated. This was accomplished in December 2007.

The assessor evaluated several drills involving an IH response and higher probability, lower consequence hazards. The drill provided evidence that the issues from JON EM -1 have been incorporated in the operations of the contractor.

Conclusions:

Closure actions for the S-102 event for Emergency Management have been closed. Closure documentation was found to be adequate, and changes have been effective in enhancing overall improvement in the EM program. The TF contractor has built into AOPs and other documentation the analysis of higher probability, lower consequence hazards and how to address these hazards in an emergency situation. Discussions with Senior Shift Managers and through

the observations of drills the assessors noted that the EM corrective actions have been effective in the areas of support organization response and overall EM program improvement.

Rating:

Effective

Recommendation for Completion:

None

Suggestions for Continued Improvement:

None

Reviewer:

Jack George, DOE-RL, Facility Representative, Program Manager
Courtney Blanchard, DOE-ORP, Facility Representative

Corrective Action Evaluation Form
Type A Jon: EM-2

JON/Finding:
JON/EM-2 - *Type A Accident Investigation Report* - CH2M HILL, Fluor Hanford, and AdvancedMed Hanford need to improve procedures used for responding to abnormal events at tank farm contractor facilities.

Corrective Actions Reviewed:

CHG-EM-2.1
Type A Accident Investigation Report, Issue lessons learned on the importance of complying with procedural direction to call 911 and verify compliance with requirements through completed drills.

FH-EM-2.2
Type A Accident Investigation Report, Conduct an EOC (Extent of Condition) review to determine if FH response procedures ensure: a.) the POC (Patrol Operations Center) is contacted via 911 at an appropriate time; b.) the necessary resources are requested and information is provided to the POD, and c.) the cause of a high radiation area be conservatively assumed to be a release, where appropriate, until determined otherwise.

FH-EM-2.3
Type A Accident Investigation Report, Revise and implement POC QRC (Quick Reaction Checklist) to ensure the crash phone announcement language is appropriate for the level of event.

FH-EM-2.4
Type A Accident Investigation Report, POC QRCs will be reviewed and modified (if required) to ensure adequacy for responding to abnormal events.

FH-EM-2.5
Type A Accident Investigation Report, Update and implement RLEP 2.4 to clarify and streamline notification steps.

AMH-EM-2.6
Type A Accident Investigation Report, Update and implement AMH-ADM-130C, Manager On Call, to ensure medical representation is sent to the site ECT upon notification of its activation.

DOE-EM-2.7
Type A Accident Investigation Report, Provide direction to Hanford Site contractors to review their procedures that direct 911 calls. Ensure calls are made at appropriate times and proper resources are requested.

Documents Reviewed:

- AMH-ADM-130C, revision 1, *Manager On Call,* September 26, 2007
- AMH-ADM-130C, revision 2, *Manager On Call Activation and Response Procedure,* March 27, 2009
- Email, Completion Documentation for AMH-EM-2.6, December 10, 2007
- Email, Please Read Before You Delete, I Acknowledge Reading FY09 AMH-ADM-130C of AMH
- No Notice Drill/Exercise Report, March 12, 2008
- Assessment and Exercise Logs for AMH
- AMH-QA-IA-09-028, Manager On Call Procedure Assessment Report
- AMH-QA-MA-08-056-03, AMH Emergency Preparedness Program Assessment Report
- *Fiscal Year (FY) 2008 Hanford Emergency Readiness Assurance Plan (ERAP) and Continuity Readiness Assurance Report*, dated December 1, 2008
- Hanford Emergency Operations Center, Emergency Plan Implementing Procedure (RLEP) 2.4, *Event Coordination Team*, revisions dated November 20, 2007 and January 22, 2009
- *Precautionary Take Cover Checklist 06-0600,* revisions dated October 10, 2007 and January 8, 2009

Activities/Operations Observed:

- March 10, 2008 Hanford Area Emergency Drill
- April 7, 2009 AP Tank Farm High Efficiency Particulate (HEPA) Filter Failure Drill
- April 7, 2009 Radiological Waste Container Handling Accident Drill

Interviews:

- Director, Emergency Preparedness, Fluor Hanford
- Director, Safeguards, Safeguards and Emergency Preparedness, CH2M HILL Plateau Remediation Project
- Manager, AMH Performance Assurance
- Manager, Contractor Support, Fluor Hanford Emergency Management
- Manager, Site Emergency Preparedness Program, Fluor Hanford Emergency Management
- Project Engineer, Security and Emergency Services Division, U.S. Department of Energy, Richland Operations Office

Results:

The document review and interviews of the corrective actions task associated with both AdvanceMed Hanford (AMH) and the Fluor Hanford (FH) Emergency Preparedness organizations supporting this JON were complete, effective, and sustainable.

Since the completion of the initial corrective action task, AMH has performed numerous assessments and has participated in three site exercises. The assessment and exercises have led to the identification of several continued improvement items. The most recent improvement has

integrated the Manager On Call (MOC) improvement with the Medical Provider On Call (MPOC) process to include not only exercise response but actual emergency event response. The AMH procedure change and corrective action management process are being utilized to complete the improvement to ensure that both the MOC and MPOC support the Event Coordination Team (ECT) and Emergency Operations Center (EOC) as required by the corrective action task.

Likewise, continuing field exercises coordinated by the FH Emergency Preparedness organization have demonstrated ongoing efficacy of corrective actions relating to take cover actions, response to abnormal events through implementation of Quick Reaction Checklists, and streamlining of notification communications. Corrective actions relevant to communication via the "crash phones" have been carried over to the Hanford Site Emergency Alerting System that is now in effect. Specifically, take cover actions continue to be implemented via the 'Precautionary Take Cover Checklist 06-0600'.

At the time of contractor transition in October 2008, almost all FH-managed hazardous facilities were transferred over to the CH2M HILL Plateau Remediation Corporation. Corrective actions for the associated emergency response procedures of these facilities remain intact for clear instructions to call 911, information necessary to report to the Patrol Operations Center, and identification of necessary services or actions to be requested from the Patrol Operations Center. There have been no additional hazardous facilities identified that would require implementation of the corrective actions.

DOE provided direction to Hanford contractors to review their procedures regarding 911 calls to ensure calls were made at the appropriate times and proper resources were requested. Each contractor provided its review results and copies of procedure changes where appropriate to ensure that 911 was called in appropriate circumstances, necessary resources were requested, and information was provided to the Patrol Operations Center. Effectiveness was observed by the assessor during observing the March 10, 2008 Hanford Area Emergency Drill, the April 7, 2009 AP Tank Farm High Efficiency Particulate (HEPA) Filter Failure Drill, and April 7, 2009 Radiological Waste Container Handling Accident Drill. In these drills the Building Emergency Director gave direction to the Incident Command Post (ICP) Communicator to make the appropriate 911 call. Effectiveness will continue to be determined in future quarterly exercises and drills.

Conclusions:

The AdvancedMed Hanford and Fluor Hanford Emergency Preparedness organizations have improved the procedures used for responding to abnormal events at tank farm contractor facilities. The relevant procedure changes remain intact, and met the requirements of this JON.

Rating:

Effective

Recommendation for Completion:

None

Suggestions for Continued Improvement:

None

Reviewers:

Jack George, DOE-RL, Facility Representative, Program Manager
Courtney Blanchard, DOE-ORP, Facility Representative
Mike Flasch, WRPS, Quality Assurance Engineer
Mike Silvia, WRPS

Corrective Action Evaluation Form
Type A Jon: EM-3

JON/Finding:
JON/ EM-3 - *Type A Accident Investigation Report* - CH2M HILL and Fluor Hanford need to correct weaknesses and inconsistencies in the implementation of take cover protective actions.

Corrective Actions Reviewed:

FH-EM-3.1
Type A Accident Investigation Report, Revise and implement applicable DOE-0223 (Site-wide emergency response procedures) to include steps to evaluate the need for continued protective actions, provide criteria and processes to relax protective actions if conditions warrant, and provide appropriate information to those who may contact the ICP for direction.

FH-EM-3.2
Type A Accident Investigation Report, Revise and implement associated emergency response organization training lesson plans.

FH-EM-3.3
Type A Accident Investigation Report, Identify and train emergency response organization members impacted by the procedure changes.

FH-EM-3.4
Type A Accident Investigation Report, Revise HGET to provide additional information to ensure the desired actions are taken during take cover conditions.

FH-EM-3.5
Type A Accident Investigation Report, Develop and distribute a just-in-time bulletin to communicate the lessons learned addressing take cover actions.

FH-EM-3.6
Type A Accident Investigation Report, Provide written instruction to Hanford Patrol and ECT/EOC regarding instructions to give employees during a take cover event.

FH-EM-3.7
Type A Accident Investigation Report, Revise and implement POC QRC to identify access control points for take cover areas.

FH-EM-3.8
Type A Accident Investigation Report, Perform an effectiveness review of JON EM-2 and EM-3 corrective actions.

FH-EM-3.9
Type A Accident Investigation Report, Conduct a drill, or series of drills, to verify effectiveness of Actions FH-EM-2.5, AMH-EM-2.6, FH-EM-3.1, FH-EM-3.6, FH-EM-3.7, and AMH-HE-2.12.

Documents Reviewed:

- *Fiscal Year (FY) 2008 Hanford Emergency Readiness Assurance Plan (ERAP) and Continuity Readiness Assurance Report*, dated December 1, 2008
- *Precautionary Take Cover Checklist 06-0600*, revisions dated October 10, 2007 and January 8, 2009
- Hanford Emergency Operations Center, Emergency Plan Implementing Procedure (RLEP) 1.1, *Recognizing and Classifying Emergencies*, revisions 17 dated January 14, 2008 and 19 dated June 5, 2008
- Hanford Emergency Operations Center, Emergency Plan Implementing Procedure (RLEP) 2.3.22, *Site Emergency Director*, revisions 15 dated January 14, 2008 and 17 dated January 7, 2009
- Hanford Emergency Operations Center, Emergency Plan Implementing Procedure (RLEP) 2.3.34, *Consequence Assessment Director*, revisions 11 dated January 14, 2008 and 12 dated February 28, 2008
- Hanford Emergency Operations Center, Emergency Plan Implementing Procedure (RLEP) 2.3.39, *UDAC Assessment Manager*, revisions 14 dated January 14, 2008 and 15 dated February 28, 2008
- Hanford Emergency Operations Center, Emergency Plan Implementing Procedure (RLEP) 3.11, *Exercise and Emergency Response Evaluations*, revision7
- *Precautionary Take Cover Checklist 06-0600*, revisions dated October 10, 2007 and January 8, 2009
- *Hanford Fiscal Year (FY) 2008 Second Quarter Limited Exercise Evaluation*, dated April 2008
- *Hanford 2008 Field Exercise Evaluation*, dated July 28, 2008

Activities/Operations Observed:

- March 10, 2008 Hanford Area Emergency Drill
- April 7, 2009 AP Tank Farm High Efficiency Particulate (HEPA) Filter Failure Drill
- April 7, 2009 Radiological Waste Container Handling Accident Drill

Interviews:

- Director, Emergency Preparedness, Fluor Hanford
- Manager, Contractor Support, Fluor Hanford Emergency Management
- Manager, Site Emergency Preparedness Program, Fluor Hanford Emergency Management
- Project Engineer, Security and Emergency Services Division, U.S. Department of Energy, Richland Operations Office
- Specialist, Emergency Preparedness (2)

Results:

The take cover corrective actions associated with the Fluor Hanford (FH) Emergency Preparedness organization supporting this JON were complete, effective and sustainable.

Corrective actions implemented in response to two take cover issues identified during the fiscal year (FY) 2008 second quarter limited exercise evaluation in April 2008 were completed in November 2008 (300 Area Emergency Alerting System siren activation) and April 2009 (PNNL personnel having received incorrect approval to eat and drink during a take cover scenario), respectively. Take cover coordination and direction were observed as effectively implemented due to an absence of issues identified during subsequent site and Tank Farm drill evaluations.

Training materials developed for presentation to Emergency Response Organization personnel were effective in identifying and communicating procedure changes developed to improve take cover coordination actions. All relevant Emergency Response Organization personnel have completed the training. In addition the Hanford General Employee Training (HGET) emergency preparedness module has been upgraded to emphasize the Hanford site take cover response expectations.

The Emergency Plan Implementing Procedures that were revised to support corrective action implementation were reviewed to ensure that the relevant procedure contents were not altered during subsequent revisions; confirmation was achieved that the necessary procedure contents remain intact.

Confirmation was achieved that the series of contractor transitions in October 2008 did not adversely impact the ability of the Fluor Hanford Emergency Preparedness organization to coordinate site emergency response activities, or the ability of the Hanford Patrol organization to support emergency response conditions. The present Hanford contractors are positioned to respond effectively to emergency response conditions.

Conclusions:

The Fluor Hanford Emergency Preparedness organization has improved the procedures and processes implemented in response to 'take cover' scenarios. The relevant procedure changes remain intact, and met the requirements of this JON.

Rating:

Effective

Recommendation for Completion:

None

Suggestions for Continued Improvement:

None

Reviewer:

Mike Flasch, WRPS, Quality Assurance Engineer
Jack George, DOE-RL, Facility Representative, Program Manager

Corrective Action Evaluation Form
Type A JON: HE-1

JON/Finding:
JON/ HE-1 - *Type A Accident Investigation Report* - CH2M HILL needs to integrate industrial hygiene into responding to abnormal events which may involve a chemical release. In addition, CH2M HILL needs to establish and implement industrial hygiene procedures, sampling and monitoring protocols, and training of industrial hygiene staff for responding to the range of abnormal events identified in Tank Farm Hazard Analysis Documents.

Corrective Actions Reviewed:

CHG-HE-1.1
Type A Accident Investigation Report, Prepare training for shift managers, workers, and their supervisors on industrial hygiene role in response to abnormal events and shift manager responsibilities in initiating effective event response.

CHG-HE-1.2
Type A Accident Investigation Report, Conduct training for shift managers, workers, and their supervisors on industrial hygiene role in response to abnormal events and shift manager responsibilities in initiating effective event response.

CHG-HE-1.3
Type A Accident Investigation Report, Update tank farms chemical hazard reference and information materials to assist the shift manager in making decisions regarding response to chemical incidents.

CHG-HE-1.4
Type A Accident Investigation Report, Implement tank farms chemical hazard reference and information materials per CHG-HE-1.3, in shift offices.

CHG-HE-1.5
Type A Accident Investigation Report, Conduct training for industrial hygienists and technicians on response to abnormal events per the AOPs.

CHG-HE-1.6
Type A Accident Investigation Report, Enhance and implement industrial hygiene monitoring for waste transfer during abnormal events.

CHG-HE-1.7
Type A Accident Investigation Report, Conduct training for industrial hygienists, industrial safety professionals, field work supervisors, procedure writers, work planners, and operations managers on expectations for use of job hazard analysis processes, including the worksite hazard analysis, as part of the development, maintenance, and use of technical procedures and work instructions.

Documents Reviewed:

- Training Activity TO7043 - *IH Role in Abnormal Events*
- Training Activity TA-07041 - *Job Hazard Analysis Process*
- Training Activity TA-08041- *EM - Identification of Exposed Personnel*
- Training Activity TO801 8 - *Case Manager Coordination w/AMH*
- Training Activity TO7044 - *Tank Farm Vapor Information Sheet*
- Training Activity TO8028 - *IH Sampling for Waste Transfer/Retrieval for Potential Abnormal Events*
- Training Activity - *Dose Reconstruction IH Sampling for Waste Transfer Abnormal Events*
- Training Course 357103 - *Cycle 3 Industrial Health Technician Continuing Training*
- TF-AOP-003, *Response to Elevated Airborne Radioactivity, Rev.* B- *7*
- TF-AOP-0 11, *Response to Chemical and/or Radiological Events, Rev. C-1*
- TF-AOP-015, *Response to Reported Odors or Unexpected Changes to Vapor Conditions, Rev. B-18*
- TF-AOP-018, *Response to Electrical, Water, Air, or Pressurized Gas Cylinders High Energy Release, Rev.* B-2
- TFC-ESHQ-S-CMLI-C-0 1, *Injury and Illness Recordkeeping, Rev. C-2*
- TFC-ESHQ-S - CMLI-C-02, *Injury and Illness Events, Rev.* B-2
- TFC-ESHQ-S CMLI-CD-03, *Workers Compensation Program, Rev. C*
- TFC-OPS-OPER-CD-01, *Event Notification, Rev. A*
- TFC-ESHQ-S IH-C-46, *IH Reporting and Records Management, Rev. B-1*
- Standing Order CO-07-009, *Industrial Hygiene Dose Reconstruction Sampling for Waste Transfer and Retrievals*
- Standing Order WFO-07-006, *Industrial Hygiene Dose Reconstruction Sampling for Waste Transfer and Retrievals*
- *Shift Office On-Call List,* RPP-IP-0732, release 135

Activities/Operations Observed:

- April 7, 2009 AP Tank Farm High Efficiency Particulate (HEPA) Filter Failure Drill
- April 7, 2009 Radiological Waste Container Handling Accident Drill
- April 16, 2009 Emergency Preparedness C-110 Tabletop Drill

Interviews:

- Manager, IH Programs
- Manager, Training
- Manager, Security & Emergency Services/Events Investigation
- Manager, Shift Operations
- Manager, Senior Shift
- Coordinator, Emergency Preparedness

Results:

The effectiveness review for JON HE 1 included reviewing the seven corrective actions (CA), select aspects of their closure documentation, how the CAs were implemented, and if the corrective actions will be effective in preventing reoccurrence of the deficiency identified in this JON. The CAs 1.1, 1.2, 1.5, and 1.7 pertained to training deficiencies mostly in the area of Industrial Hygiene engagement during the S-102 response. Corrective Actions 1.3, 1.4, and 1.6 address enhancements needed for the shift manager's to integrate industrial hygiene into responding to abnormal events which may involve a chemical release.

The Tank Farm contractor used an activity tracking information sheet to systematically analyze the training requirements and to ensure the appropriate personnel were trained. The assessor identified that the personnel identified for this training captured the audience required by these CAs and an exam was administered to verify proficiency. The training covered industrial hygiene's role and what actions were to be taken by personnel, including the shift manager(s), in responding to abnormal events. The activity tracking information sheet No. T07043 was closed on 12/11/07 and training material was included in the evidence package for this corrective action. This training was required for Shift Managers, NCOs, IHTs, HPTs, PICs, OEs, SOE, Maintenance Craft for Waste Feed Operations, Closure Operations, and the Sampling Organization of Analytical Technical Services (ATS). In addition to this training, WRPS made a decision to train IH and IHT in ERO, which was completed. The deliverable for this action was completion of training for 90% of the target audience, which was verified completed.

Prior to the July 27, 2007 S-102 event, Senior Shift Managers referenced the tank vapor information sheet (TVIS) during a tank farm chemical incident. There were 18 different TVIS for all of the tank farms. These TVIS did not readily assist the shift managers in making decisions regarding response to chemical incidents as identified in this JON. To address the deficiency, a tank farm chemical vapor information summary was developed for the A, B, S, and T Complex and the C and U Tank Farms. The tank farm chemical vapor information summary included the chemicals of concern with their respective action limits, odor thresholds, and acute symptoms of over exposure for each area. This document also referenced the safety and health contacts and what actions to take if exposure to tank waste occurred. A briefing was held to discuss the information presented on the summary sheet. Those in attendance included Tank Farms managers, health physics technicians, industrial hygiene technicians, operators, maintenance, and field work personnel. A written knowledge check was given to all attendees. Attendance rosters were provided in the evidence package. Training for the IHs and IHTs was made part of the continuing training, as indicated in the Training Activity Sheet for course number 357103, Rev #1, which was included in the evidence package. The list of IHs and IHTs who attended the training was also included in the evidence package.

The assessor reviewed documentation at the shift office to ensure IHT engagement was integrated into Abnormal Operating Procedures (AOP) and discussed IHT involvement with IH Program, Shift Operations, and Senior Shift Managers. The Shift Manager recited the tank farms vapor information sheet content, knew exactly where they were located in his office, and appropriately explained when he used them. The IH Program, Training, and Shift Operations Managers independently explained that a significant deficiency in the S-102 event response was

not engaging IHTs, rather than IHTs performance. The IH Program Manager stated that WRPS management had made a decision to have ERO training assigned for IHs and IHTs. This ERO training was completed. The IH Program, Training, Shift Operations, and Senior Shift Managers stated that IH involvement in emergency and operational responses will initially parallel the radiological response. Reviewing the AOPs identified that IH involvement commenced with the radiological response.

The assessors observed the April 7, 2009 AP Tank Farm High Efficiency Particulate (HEPA) Filter Failure Drill and April 7, 2009 Radiological Waste Container Handling Accident Drill at the 222S Laboratory. During both drills the IH and radiological engagement occurred during the initial response to the event. The HEPA Filter Drill required IH to set-up and perform vapor samples where the Waste Container Handling Accident Drill required no IH sampling. However, the Chemical Hazards Assessor during the Waste Container Handling Accident Drill did address the potential chemical exposure hazard in a timely fashion. For this drill scenario no chemical hazard exposure existed. The assessor noted that for both accident scenarios a hazardous chemical aspect to the event would have increased and demonstrated proficiency in addressing a more significant IH event.

Conclusions:

Closure actions for the S-102 event for Industrial Safety and Hygiene have been completed. Closure documentation was found to be adequate, and changes have been affective in enhancing overall improvement in the IH program. The TF contractor has built into AOPs, and other documentation, the need to engage IH support during operational and emergency responses. The assessors noted that the Industrial Safety and Hygiene corrective actions have been effective in the areas of support for organization response and overall IH program improvement though discussions with management and the observations of drills.

Rating:

Effective

Recommendation for Completion:

None

Suggestions for Continued Improvement:

S-HE-1-1
WRPS should revise drill scenarios to include a chemical attribute that requires more in-depth IH response which may include a worker(s) in contact with tank waste, chemical spill, vapor event, etc.

Reviewer:

Courtney Blanchard, DOE-ORP, Facility Representative

Corrective Action Evaluation Form
Type A JON HE-2

JON/Finding:
JON/HE-2 - *Type A Accident Investigation Report* - The Hanford Fire Department, managed by Fluor Hanford, needs to improve its emergency medical technicians/paramedics performance in the areas of improved documentation of patient encounters and communications with AdvanceMed Hanford; more frequent reviews of records by physicians is one needed element in the efforts to enhance documentation of patient encounters.

Corrective Actions Reviewed:

HE-2
Type A Accident Investigation Report, Conduct an extent of condition (EOC) review.

FH-HE-2.1
Type A Accident Investigation Report, Work with AdvanceMed Hanford to create a form specific for after care instructions following a work place injury, exposure, or potential exposure that requires the employee to report to the contractor's OMSP.

FH-HE-2.2
Type A Accident Investigation Report, Revise Standard Operating Guideline 2.B.4, Revision 0, Ambulance Responses, to eliminate references to the patient contact information form.

FH-HE-2.3
Type A Accident Investigation Report, Revise Standard Operating Guideline 3.A.9, Revision 0, Response To Radiologically Posted Areas, to include the notification of the contractor's OMSP physician on call for chemical and radiological material exposures. The names of employees required to report to the OMSP will be provided to the OMSP for follow-up.

FH-HE-2.4
Type A Accident Investigation Report, Cancel Standard Operating Guideline 3.A.12, Revision 0, Patient Contact Information Form Use.

FH-HE-2.5
Type A Accident Investigation Report, Train personnel to the revised Standard Operating Guidelines 2.B.4 and 3.A.9, the new procedure developed in Action FH-HE-2.10, and the new after care instruction form developed in Action FH-HE-2.1.

FH-HE-2.6
Type A Accident Investigation Report, Invite the Benton County Medical Program Director to the Hanford Fire Department monthly emergency medical services meetings.

FH-HE-2.7
Type A Accident Investigation Report, Provide "Emergency Medical Response To Hazardous Materials" refresher training to paramedics.

FH-HE-2.8
Type A Accident Investigation Report, Provide "Hazardous Material Awareness and Operations" refresher training to paramedics and emergency medical technicians.

FH-HE-2.9
Type A Accident Investigation Report, Communicate expectations that the patient care report will be completed to provide adequate information using the subjective, objective, assessment, plan format so that this information can be provided to the contractor's OMSP.

FH-HE-2.10
Type A Accident Investigation Report, Develop and implement a new procedure that will ensure that the contractor's OMSP is informed when employees are involved in actual or potential chemical and radiological material exposures.

FH-HE-2.11
Type A Accident Investigation Report, Perform an effectiveness review of corrective actions.

AMH-HE-2.12
Type A Accident Investigation Report, Update and implement AMH-CS-385B, *On-Call Medical Response to Site Emergencies Policy* and AMH-CS-385C, *On-Call Medical Response to Site Emergencies* procedure to ensure the HFD/AMH notification process for potential chemical exposures is effective.

Documents Reviewed:

- Standard Operating Guideline 3.A.9, Revision 0, *Response To Radiologically Posted Areas*
- Standard Operating Guideline 3.A.12, Revision 0, *Patient Contact Information Form Use*
- AMH-CS-385B, *On-Call Medical Response to Site Emergencies Policy, May 29, 2008*
- AMH-CS-385C, *On-Call Medical Response to Site Emergencies, May 28, 2008*
- No Notice Drill/Exercise Report, March 12, 2008
- Email, Quarterly Meetings of AMH SOMD with HFD/FH
- Email, FOH Recommendations from April Visit – AMH's Compliance and Completion of Documentation AMH-HE-2.12 and 08-SES-002-02
- Email, AMH-CS-385C – On Call Medical response to Site Emergencies Policy.doc,
- AMH-CS-385C On Call Medical Response to Site Emergencies Procedure.doc
- EMS Community Meetings - List of Meetings involving SOMD, HFD and Tri-Cities Community Emergency Medical Coordinator
- Site Form BC-6004-463, *Hanford Fire Department – Workplace Injury/Exposure After-Care Instructions*, revision 1
- Hanford Fire Department Standard Operating Guideline 2.B.4, *Ambulance Responses*, revision 1 dated October 29, 2007 (not revised since revision 1)

- Hanford Fire Department Standard Operating Guideline 3.A.9, *Responses to Radiologically Posted Areas*, revision 0 and revision 1 dated October 29, 2007
- Hanford Fire Department Standard Operating Guideline 3.A.15, *Treatment and Documentation of Workplace Injuries/Exposures*, revision 0 dated October 29, 2007
- Minutes – Mid Columbia EMS & Trauma Council, February 2 and March 2, 2009
- *Fiscal Year (FY) 2008 Hanford Emergency Readiness Assurance Plan (ERAP) and Continuity Readiness Assurance Report*, dated December 1, 2008
- *Hanford Fiscal Year (FY) 2008 Second Quarter Limited Exercise Evaluation*, dated April 2008
- *Hanford 2008 Field Exercise Evaluation*, dated July 28, 2008

Activities/Operations Observed:

None

Interviews:

- Chief, Hanford Fire Department
- Training and Medical Services Officer, Hanford Fire Department
- Secretary, Hanford Fire Department
- Manager, AMH Performance Assurance
- Specialist, Emergency Preparedness (2)

Results:

The document review and interviews of the corrective actions task associated with both AdvancedMed Hanford (AMH) and the Fluor Hanford (FH) Fire Department organizations supporting this JON were complete, effective and sustainable.

The meetings are scheduled by the FH Fire Department administrative staff. AMH has participated in the meetings and since 2007, with seven meetings held. The requirement to attend these meetings is listed in the procedure.

Improved documentation of patient encounters and communications with AMH has been effectively implemented through specific documented expectations such as the following:

- After care activities following a work place injury, exposure or potential exposure that requires the employee to report to the contractor's On-site Medical Service Provider (OMSP))
- Ambulance response
- Notification of the contractor's OMSP physician for chemical and radiological material exposures

The FH Fire Department Standard Operating Guidelines (SOG) that were revised to support corrective action implementation were reviewed to ensure that the relevant Guideline contents were not altered during subsequent revisions; confirmation was achieved that the necessary SOG

contents remain intact. Where necessary, new forms generated to support corrective actions have been entered into the 'site forms' web page to provide configuration control.

Corrective actions that were implemented to train personnel to the SOG changes were verified to encompass all of the relevant personnel; also, the training materials provided in-depth information to ensure information transfer. Personnel who had not participated in the training activities prior to closure of the corrective action task were verified to have subsequently completed the training.

A corrective action to "Invite the Benton County Medical Program Director to the Hanford Fire Department Monthly Emergency Medical Services Meetings" was observed to be implemented effectively. Following formal invitation to participate in these meetings on October 22, 2007, review of several recent meeting minutes for the Mid-Columbia EMS & Trauma Council confirmed relevant participation.

Recent emergency preparedness exercises have not indentified any adverse performance issues by the emergency medical technicians/paramedics in event response.

Conclusions:

The Hanford Fire Department has improved its emergency medical technicians/paramedics performance in the areas of improved documentation of patient encounters and communications with AdvanceMed Hanford. The Hanford Fire Department updated their Standing Operating Guidelines, met with AMH and Benton County to resolve these issues. Then they trained their employees on the updated processes. Reviews of the Standing Operating Guidelines and interviews with Fire Department and AMH have verified that these actions are effective.

Rating:

Effective

Recommendations for Completion:

None

Suggestions for Continued Improvement:

None

Reviewers:

Mike Flasch, WRPS; Quality Assurance Engineer
Mike Silvia, WRPS;
Jack George, DOE-RL, Facility Representative, Program Manager

Corrective Action Evaluation Form
Type A JON HE-3

JON/Finding:
JON/HE-3 - *Type A Accident Investigation Report* - CH2M HILL, Fluor Hanford, and AdvanceMed Hanford need to improve medical monitoring, documentation, and accountability of individuals with health symptoms and/or complaints following an accident.

Corrective Actions Reviewed:

CHG-HE-3.1
Type A Accident Investigation Report, Train response personnel and appropriate operations and programs managers on the personnel identification process.

CHG-HE-3.2
Type A Accident Investigation Report, Revise and implement procedures as necessary to ensure appropriate case management of exposed personnel and coordination with AMH.

CHG-HE-3.3
Type A Accident Investigation Report, Provide medical surveillance for workers potentially affected by the S-102 spill through the case management process to ensure that follow-on testing and consultation is completed on schedule per recommendations of Health Effects Report RPP-RPT-34902.

FH-HE-3.4
Type A Accident Investigation Report, Revise HNF-PRO-077, Reporting, Investigating, and Managing Health, Safety, and Property/Vehicle Events, to clarify that employees involved in events with potential exposures are required to report to the contractor's Occupational Medical Service Provider (OMSP) for evaluation and follow-up, and that managers of the potentially affected employees require the employees to report to the OMSP.

FH-HE-3.5
Type A Accident Investigation Report, Issue a safety bulletin (contextually explaining the requirements and reasoning for reporting to OMSP and explaining the changes to HNF-PRO-077 and to the Hanford Fire Department's process for potential exposures) to disseminate the information to employees and managers.

FH-HE-3.6
Type A Accident Investigation Report, Perform an effectiveness review of corrective actions.

FH-HE-3.7
Type A Accident Investigation Report, Develop a Site-wide process to make contact with those potentially exposed to chemical or radiological hazards away from an event scene, and provide medical evaluation and follow-up as needed.

AMH-HE-3.8
Type A Accident Investigation Report, Update AMH-CSS-326C, *Patient Results Notification* procedure to ensure consistency in the notification process.

AMH-HE-3.9
Type A Accident Investigation Report, Review existing laboratory tests against suggested changes recommended in the Cohort Medical Monitoring Report and update documents as appropriate.

AMH-HE-3.10
Type A Accident Investigation Report, Update AMH-CS-140A, *Case Management Plan* and implementing documents to reflect necessary changes for the medical monitoring process.

AMH-HE-3.11
Type A Accident Investigation Report, Provide training of new/revised procedures to staff.

AMH-HE-3.12
Type A Accident Investigation Report, Develop and implement event exposure tracking database.

DOE-HE-3.13
Type A Accident Investigation Report, Provide direction to Hanford Site contractors to review/revise their procedures, ensuring that all employees involved in potential exposure events are required to report to the contractor's OMSP for evaluation.

DOE-HE-3.14
Type A Accident Investigation Report, Perform an independent assessment of the effectiveness of AMH's corrective actions. This review should also examine the level and effectiveness of RL oversight of AMH. The review will be performed either by RL staff independent of line management responsible for AMH, or an external reviewer such as the U. S. Public Health Service.

Documents Reviewed:

- Health Effects Report RPP-RPT-34902
- HNF-PRO-077, *Reporting, Investigating, and Managing Health, Safety, and Property/Vehicle Events*
- AMH-CSS-326C, rev 2, *Patient Results Notification Procedure,* June 17, 2008
- Email, Post-Exposure Lab Appt-CAP Validation
- Assessment and Exercise Logs for AMH
- AMH-QA-09-004 Re-Measure-Follow up to Exposure CAP, October 28, 2008
- Training Roster for new and revised procedures under the Type CAP AMH-HE-3.11
- Memo: Exposure Protocols, December 19, 2007
- *(EXP) Exposure and Unusual Event Service*, July 21, 2008
- *(EXREV) Exposure and Unusual Event – Review of Lab Results*, July 21, 2008
- *(EXP1/EXP2/EXP3) Exposure and Unusual Event Follow Up Monitoring*, July 21, 2008
- *(EXP1/EXP2/EXP3) Exposure and Unusual Event Follow Up Monitoring*, April 15, 2009
- AMH-CS-140A, Rev 4, *Case Management Plan,* December 12, 2007
- AMH-CS-143C, rev 1, *Exposure Procedure*, December 20, 2007

- AMH-CS-143C, rev 1, *Exposure Procedure*, October 29, 2008
- *(CARPV) Previous Carcinogen Exposure Program*, June 2, 2008
- *Case Management End of Day Tracking* Desk Instruction, December 31, 2008
- *Daily Updates to Case Management File* Desk Instruction, March 16, 2009
- *Generate New Case Management Patient File* Desk Instruction, March 18, 2009
- *Work Suitability Evaluation (WSE)* Desk Instruction, October 7, 2008
- *Exposure Patient Tracking* Desk Instruction, February 3, 2009
- Staff Meeting Agenda, Procedure Training for Type A CAP
- *Tracking Group Exposure (TGE) Systems Design Description*, Revision 1.1, December 11, 2007
- NRSCM022 – Exposure Results Pending Report (7 days or greater), April 9, 2009
- TFC-ESHQ-S_CMLI-C-02, *Illness and Injury Event*
- TRF-ERP-013, *Emergency Response Procedure 013 Tank Farm Worker Emergency Response*
- TFC-ESHQ-S_CMLI-C-0, *Injury and Illness Recordkeeping*

Activities/Operations Observed:

- April 7, 2009 AP Tank Farm High Efficiency Particulate (HEPA) Filter Failure Drill
- April 7, 2009 Radiological Waste Container Handling Accident Drill
- April 16, 2009 Emergency Preparedness C-110 Tabletop Drill

Interviews:

- IH Technician (2)
- Electrician (3)
- Nuclear Chemical Operator (2)
- Manager, IH Programs
- Manager, Training
- Manager, Security & Emergency Services/Events Investigation
- Manager, Shift Operations
- Manager, Senior Shift
- Coordinator, Emergency Preparedness
- Manager, AMH Performance Assurance
- Team Lead, AMH Special Projects
- Manager, AMH Case Management
- DOE Facility Representative, ORP
- HAMTC Safety Representative
- Director, Emergency Preparedness, Fluor Hanford
- Manager, Contractor Support, Fluor Hanford Emergency Management
- Manager, Site Emergency Preparedness Program, Fluor Hanford Emergency Management
- Project Engineer, Security and Emergency Services Division, U.S. Department of Energy, Richland Operations Office
- Specialist, Emergency Preparedness (2)

Results:

The document review and interviews of the corrective actions tasks associated with AdvancedMed Hanford supporting this JON were complete, effective and sustainable. AMH has conducted an assessment regarding exposure notifications. A second assessment is scheduled for August 2009. The results show consistency for mailings to be at 86% and follow ups at 55%. Expectations are that improvements will generate increased percentages. The exposure process protocols have been updated for improved notifications. Case management policy and procedure have been updated and are being maintained. The training on the seven new/modified procedures was completed and documented. The training was part of a staff meeting while the performance demonstrations included assessments and participation and verification as part of three site exercises. The process for communicating the most recent changes relies on required reading email notifications and voting button replies.

DOE provided direction to Hanford contractors to review and revise as necessary procedures ensuring that all employees involved in potential exposure events were required to report to the contractor's occupational medical services provider for evaluation as soon as possible, but no later than their next return to work. DOE then validated that all Hanford contractors put this provision in their procedures and that the procedures flowed down to subcontractors. DOE reviewed Bechtel National Inc., Advanced Technologies and Laboratories, CH2M Hill, Fluor Hanford, Washington Closure Hanford, Washington River Protection Solution, and AdvanceMed Hanford as well as a sampling, of subcontracts from each of the RL/ORP contractors for compliance with this requirement. The assessor reviewed Washington River Protection Solution, Procedure TFC-ESHQ-S_CMLI-C-02, Illness and Injury Event, Section 3.2.1.2 that required employee to report to an Onsite Medical Provider (OSMP) Health Care Center for evaluation as soon as possible but no later than the next scheduled shift under the following circumstances:

- When the employee has been instructed to do so by the Hanford Fire Department
- When instructed to do so by management
- When the employee has incurred an occupational injury not meeting self-treat criteria
- When the employee has incurred a chemical exposure
- When the employee has incurred a potential chemical exposure.

There were no issues identified and all of the procedures clearly required any employee involved in a potential exposure event to report to the contractors' OMSP for evaluation. The Federal Occupational Help Services, a division of the Department of Human and Health Services, performed an assessment to validate the effectiveness of AMH's corrective actions. The organization was scheduled to continue assessments of AMH biannually. The assessments have found AMH's corrective actions to be completed and effective.

The procedures that were revised to support corrective action implementation were reviewed to ensure that the relevant procedure contents were not altered during subsequent revisions. Confirmation was achieved that the necessary contents remain intact.

An extensive effectiveness review of corrective actions for this JON performed in March/April 2008 concluded that implementation of the corrective actions were effective in reducing the probability of recurrence and the corrective actions directly addressed the S-102 event root causes that were identified in the JON causal analysis.

Conclusions:

Procedures and processes to provide medical monitoring, documentation, and accountability of individuals with health symptoms and/or complaints following an accident have been implemented effectively. The document review and interviews have shown that the corrective actions task associated with both AdvancedMed Hanford (AMH) and the Fluor Hanford (FH) Emergency Preparedness organizations supporting this JON were complete, effective, and sustainable.

Rating:

Effective

Recommendation for Completion:

None

Suggestions for Continued Improvement:

None

Reviewers:

- Jack George, DOE-RL, Facility Representative, Program Manager
- Courtney Blanchard, DOE-ORP, Facility Representative
- Mike Flasch, WRPS, Quality Assurance Engineer
- Mike Silvia, WRPS

Corrective Action Evaluation Form
Type A WC-1

JON/Finding:
Type A WC-1,CH2M HILL management needs to define and implement an effective method for identifying Tank Farm small quantity waste leaks.

Corrective Actions Reviewed:

CHG-WC-1.1
Develop requirements, assess technology and test selected system(s) to identify small quantity waste leaks.

CHG-WC-1.2
Install enhanced system(s) to identify small quantity waste leaks.

CHG-WC-1.3
Publish an illumination/lighting standard that implements the HAZWOPER lighting requirements.

CHG-WC-1.4
Implement illumination/lighting standard developed in CHG-WC-1.3.

Documents Reviewed:

- RPP-36115, *Remote Area Radiation Monitoring Alternatives Analysis*, Rev 0
- RPP-36117, *Remote Area Radiation Monitoring Functional Design Requirements*, Rev 0
- RPP-SPEC-36575, *Waste Retrieval Remote Monitoring Camera (WRRMCAM) System Requirement Specification*, Rev 0
- RPP-36590, *Waste Retrieval Remote Monitoring Camera System – Alternatives Analysis*, Rev 0
- RPP-PLAN-36598, *Waste Retrieval Remote Monitoring Camera System – Test Plan*, Rev 0
- RPP-RPT-37586, *Remote Area Radiation Monitoring (RARM) Preliminary System Functional Test Report*, Rev 0
- RPP-SPEC-25400, *Procurement Specification for Remote Area Radiation Monitoring (RARM) System*, Rev 3
- RPP-RPT-36766, *Waste Retrieval Remote Monitoring Camera System Test Report*, Rev 0
- Lockheed Martin *Test Plan and Test Evaluation Report WRRMCAM Factory Acceptance Test – Unit #1*
- RARM-PTSD-001, *Project Turnover Scoping Document for Remote Area Radiation Monitoring (RARM) Equipment*, Rev 0
- WRRMCAM-PTSD-001, *Project Turnover Scoping Document for Waste Retrieval Monitoring Camera (WRRMCAM) System*, Rev 0
- WRRMCAM-PTD-001, *Project Turnover Document for Waste Retrieval Monitoring Camera (WRRMCAM) System*, Rev 0

- RARM-PTD-001, *Project Turnover Document for Remote Area Radiation Monitoring (RARM) Equipment*, Rev 0
- TFC-ESHQ-IH-STD-13, *Illumination*, Rev A-1
- TFC-PLN-34, *Industrial Hygiene Exposure Assessment Strategy*, Rev D-3
- Attendance Roster for TFC-PLN-34 Lighting Update Industrial Hygiene training
- *Worksite Hazard Analysis* form
- CH2M HILL Illumination Standard Powerpoint Presentation and Learning Verification
- TFC Activity Completion Rosters and ITEM Reports for TO8017, Illumination and Lighting Standard training
- Interoffice Memorandum 73D20-BJK-08-082, August 15, 2008, *2008 Lighting Surveys in 241-AN and 241-C Tank Farms*
- Interoffice Memorandum 73D20-MTH-08-066, April 7, 2008, *Lighting Survey at 241-C-109 Retrieval Operations Locations*
- *Contractor Readiness Assessment Report for the Single-Shell Tank 241-C-110 Waste Retrieval and Transfer to Double-Shell Tank 241-AN-106*, dated September 17, 2008

Activities/Operations Observed:

- Walkdown of 241-C Tank Farm RARMs and WRRMCAMs
- TFC-WO-08-1285C-110 Install/Remove Ops Cameras at Risers 3 & 6

Interviews:

- Industrial Hygiene Manager
- Safety and Health Engineer/Analyst
- Industrial Hygienists (2)
- American Electric C Farm Construction Workers
- Radiological Control Technicians
- 241-C-110 Readiness Assessment Team Members
- 222-S Facility Manager

Results:

Objective evidence reviewed verified the project had established credible functions, characteristics and constraints for both radiation monitors and remote monitoring cameras, conducted analyses for three alternatives for each, and made selections based upon analyses results. The selected alternatives were procured and tested before ten radiation monitors and five cameras were installed in and between 241-C and 241-AN Farms to support 241-C-110 tank waste retrieval operations.

The RARMs and WRRMCAMs were installed for the initial 241-C-110 tank waste retrieval operation and were considered to have worked adequately, although use for their design function was not tested during the retrieval process because an actual leak was not encountered.
An illumination standard (TFC-ESHQ-IH-STD-13) was developed, remains implemented, and is identified in the Industrial Hygiene exposure assessment strategy (TFC-PLN-34). Personnel

training on the standard was documented and an illumination evaluation was added to the Worksite Hazard Analysis form.

Illumination surveys were conducted for 241-C-110 tank waste retrieval operations and verified by the contractor Readiness Assessment. The design and functionality of the RARMs and WRRMCAMs were also verified by the contractor Readiness Assessment.

Conclusions:

Remote radiation monitoring and camera systems were procured, tested and installed to identify small quantity leaks during retrieval operations. They were utilized for initial 241-C-110 tank waste operations. Their effectiveness was not challenged during retrieval operations because there were no leaks encountered, but testing activities suggest they will be effective. An illumination standard was created, and the need to evaluate lighting conditions was instituted into the Worksite Hazard Analysis process. Further, readiness assessment criteria for retrieval validated both the leak identification equipment operability and illumination conditions.

Rating:

Effective

Recommendation for Completion:

None

Suggestions for Continued Improvement:

None

Reviewer:

Lead, Kerry Schierman, DOE-RL, Facility Representative
Joe Sondag, DOE-ORP, Facility Representative

Corrective Action Evaluation Form
Type A WC-2

JON/Finding:
Type A WC-2, CH2M HILL management needs to clarify technical safety requirements with regard to radiological measurements as indicators of waste transfer leaks.

Corrective Actions Reviewed:

CHG-WC-2.1
Establish industrial hygiene and radiological control approval designators for active transfer procedures.

CHG-WC-2.2
Revise and implement procedure TFC-ESHG-RP_ADM-P-01, *Radiological Monitoring During Waste Transfers and Waste Pump Maintenance Activities*, to clarify monitoring requirements associated with implementing TSR requirements for leak detection. Revised procedure will include guidance for developing comprehensive monitoring requirements for TSR level leak detection monitoring, and radiological control monitoring, that flow down into waste transfer monitoring technical work documents, as implemented by Action CHG-ENG-1.2.

Documents Reviewed:

- 2-2007-1746.1 Closure Package for CH2M-PER-2007-1746.1 (contained active/inactive waste transfer procedure coverage pages with radiological control and industrial hygiene approval designators)
- TFC-ESHQ-RP_ADM-P-01, REV C, C-1, C-2 and C-3, *Radiological Monitoring During Waste Transfers and Waste Pump Maintenance Activities*
- RPP-PLAN-35830, rev. 5, *Radiological Control Monitoring Plan for Tank 241-C-110 to Tank 241-AN-106 Waste Transfer*
- TO-220-113, *Over-Ground Transfer from 241-C-110 to 241-AN-106 and Sluicing of Tank 241-C-110*
- Lesson Plan for Course # 351038, *Radiological Monitoring for Waste Transfers*
- Training Course Materials for #351038 Rev. 0801.0, *Radiological Monitoring for Waste Transfers*
- Training materials for course number 356431, *HPT Radiological Monitoring for Waste Transfers – Walkdown Checklist*
- Training Materials for course number 356429, *HPT Radiological Monitoring for Waste Transfers – Classroom*
- Course completion roster for *Radiological Monitoring During Waste Transfers Course 351038*
- HNF-SD-WM-TSR-006, Rev. 6-A, *Tank Farms Technical Safety Requirements*; HNF-IP-1266, *Tank Farms Operations Administrative Controls*, section 5.11 Transfer Controls

- Task No. COO-VAR6, Rev.2, *Radiological Control Scheduled Radiation Survey Task Description*
- Radiological Survey Reports: COC 001465, COC 001467, COC 001476, COC 001477, COC 001479, COC 001480, COC 001481, COC 001487, COC 001488 and COC 001491
- TO-220-113, *Over-Ground Transfer from 241-C-110 to 241-AN-106 and Sluicing of Tank 241-C-11*

Activities/Operations Observed:

- Briefing and field walk down of the 241-C-110 to 241-AN-106 waste retrieval system for HPTs in training for C-110 retrieval operations (course number 356431, "HPT Radiological Monitoring for Waste Transfers – Walkdown Checklist.")

Interviews:

- SST Retrieval and Closure Radiological Controls Manager
- Health Physicists (2)
- Radiological Controls First Line Supervisors (3)
- Health Physics Technicians (5)

Results:

The evidence files and documentation for corrective actions CHG-WC-2.1 and CHG-WC-2.2 indicated that all actions have been adequately completed and closed out. Active waste transfer procedures indentified on the WRPS Procedures and Training web page under the *Index of Operating Procedures* (TO-XXX-XXX) contained the Radiological Controls and Industrial Hygiene approval designators. Procedure TFC-ESHG-RP_ADM-P-01, *Radiological Monitoring During Waste Transfers and Waste Pump Maintenance Activities* was revised and included clear guidance for identifying monitoring requirements associated with implementing TSR requirements for leak detection and radiological control monitoring requirements.

Training course 351038, *Radiological Monitoring for Waste Transfers* was provided to Health Physicists and Radiological Engineers responsible for preparing radiological monitoring plans. The course content was adequate and current Health Physicists and Radiological Engineers have received this training. The Health Physicists interviewed understood the requirements contained in TFC-ESHQ-RP_ADM-P-01, *Radiological Monitoring During Waste Transfers and Waste Pump Maintenance Activities*.

Technical Safety Requirements Administrative Control (AC) 5.7 "Safety Management Programs" and AC 5.11 "Waste Transfer Controls" were clearly identified in RPP-PLAN-35830, rev. 5, *Radiological Control Monitoring Plan for Tank 241-C-110 to Tank 241-AN-106 Waste Transfer*. These ACs are implemented through Radiological Control Scheduled Survey Tasks during waste transfer operations and the results are recorded on Data Sheet 2 of procedure TO-220-113, *Over-Ground Transfer from 241-C-110 to 241-AN-106 and Sluicing of Tank 241-C-110*. The Health Physicists interviewed understood the ACs, how they were implemented and where potential leak paths or misroutes could occur in the system.

Two qualified HPTs and their first line supervisor discussed the requirements of RPP-PLAN-35830, rev. 5, *Radiological Control Monitoring Plan for Tank 241-C-110 to Tank 241-AN-106 Waste Transfer* during a field walk down of the C-110 waste transfer system with newly assigned HPTs. Survey locations, anticipated dose rates and the upset condition dose rates were discussed as well as documentation requirements for compliance with AC 5.7 and AC 5.11.

Conclusions:

Industrial hygiene and radiological control approval designators for active transfer procedures have been established and procedure TFC-ESHG-RP_ADM-P-01, *Radiological Monitoring During Waste Transfers and Waste Pump Maintenance Activities* is effectively implemented. The training provided to Health Physicists and Radiological Engineers was adequate to ensure that the TSR controls for leak detection monitoring and other radiological control monitoring requirements are implemented in radiological monitoring plans for waste transfers. Technical Safety Requirements AC 5.7 and AC 5.11 controls were identified in RPP-PLAN-35830, rev. 5, *Radiological Control Monitoring Plan for Tank 241-C-110 to Tank 241-AN-106 Waste Transfer* and the Health Physicists and HPTs are knowledgeable of the monitoring requirements.

Rating:

Effective

Recommendation for Completion:

None

Suggestions for Continued Improvement:

None

Reviewer:

Joe Sondag, DOE-ORP, Facility Representative

Corrective Action Evaluation Form
Type A WC-3

JON/Finding:
Type A WC-3, CH2M HILL management needs to address radiological conduct of operations deficiencies that were evident during the S-102 response to abnormal operating conditions.

Corrective Actions Reviewed:

CHG-WC-3.1
Combine Abnormal Operating Procedures (AOP) with similar initial actions including TF-AOP-006 and -011, utilizing an Enhanced Work Planning approach, including representatives from operations, as well as Industrial Hygiene, Radiological Control, and Emergency Preparedness.

CHG-WC-3.2
Review all Abnormal Operating Procedures utilizing an Enhanced Work Planning approach including representatives from operations as well as industrial hygiene, radiological control, and emergency preparedness. Implement revisions with focus on effective flow between Alarm Response Procedures, AOPs and Emergency Response Procedures.

CHG-WC-3.3
Implement a process for safe AOP response such that planning time is minimized for event response and stabilization.

CHG-WC-3.4
Complete review of abnormal operating procedure changes utilizing table top drill format with all tank farm shifts.

Documents Reviewed:

- Course Completion Rosters and ITEM records for Abnormal Operating Procedure table top drills
- Closure Operations Standing Order CO-07-007, *Industrial Hygiene Sampling When Implementing TF-AOP-006, TF-AOP-011, and TF-AOP-015*
- Waste Feed Operations Standing Order WFO-07-005, *Industrial Hygiene Sampling When Implementing TF-AOP-006, TF-AOP-011, and TF-AOP-015*
- TF-AOP-003, *Response to Elevated Airborne Radioactivity*, Rev B-8
- TF-AOP-004, *Response to Seismic Event*, Rev C-2
- TF-AOP-005, *Response to Unexpected Tank Temperature, Level or Flammable Gas Increase*, Rev B-7 and C-0
- TF-AOP-006, *Response to High Radiation*, Rev C-4 and C-5
- TF-AOP-011, *Response to Radiological/Hazardous Material Leaks, Spills and/or Personnel Contamination*, Rev B-8, B-9, B-10, and C-2
- TF-AOP-015, *Response to Reported Odors or Unexpected Changes to Vapor Conditions*, Rev B-14 and C-0
- TF-AOP-018, *Response to Electrical, Water, Air or Pressurized Gas Cylinders High Energy Releases*, Rev B-1 and C-0

- TF-AOP-020, *Response for Placing Personnel and Equipment in a Safe Condition*, Rev C-0
- TF-AOP-021, *Response to Tank Farm Ventilation Upset*, Rev A-1
- TFC-OPS-MAINT-CO-1, *Tank Farm Contractor Work Control*, Rev N-3 and N-9
- TFC-OPS-OPER-STD-01, *Technical Procedure Format and Preparation Standard*, Rev A-4
- TFC-OPS-OPER-C-13, *Technical Procedure Control and Use*, Rev F-13
- Immediate Recovery Work Briefing, Feb 20-27, 2008, and Course Completion Rosters
- 41 Problem Evaluation Reports (PER) and resolutions from a search of "AOP" for 2008 and 2009
- DOE-ORP Letter, 09-ESQ-082, "Washington River Protection Solutions LLC (WRPS) Response to Abnormal Events Surveillance S-09-ESQ-TANKFARM-003," dated March 11, 2009
- WRPS Letter, WRPS-0900518 R2, "Washington River Protection Solutions LLC Response to Abnormal Events Surveillance S-09-ESQ-TANKFARM-003, 'Washington River Protection Solutions LLC Root and Common Cause Analysis Results'"

Activities/Operations Observed:

- Table-top Drill – Tank Waste Leak in C Farm

Interviews:

- Base Operations ESH&Q Manager
- Base Operations, Operations Manager
- DOE-ORP Facility Representatives
- DOE-OPR Tank Operations Division Director
- ESH&Q Manager
- ESH&Q Deputy Manager
- Emergency Preparedness Specialists
- Industrial Hygiene Manager
- Procedures Manager
- Procedures Records Management Specialist
- Quality Assurance Engineer
- Radiological Controls Supervisor
- Shift Operations Manager
- Technical Writer/Editor (3)

Results:

Objective evidence files indicated all Abnormal Operating Procedures (AOP) were reviewed and changes were made to TF-AOPs 005, 011, 015 and 018. TF-AOP-006 was initially changed, but ultimately its actions were incorporated into TF-AOP-011 and then TF-AOP-006 was cancelled. The assessor reviewed the changes, verifying content of the changes addressed shortcomings identified in the S-102 event. An enhanced work planning approach for the change process was verified by review of concurrence organizations identified on the changes and discussions with personnel. Other AOPs (003 and 004) that were not changed, but addressed similar types of events, were also reviewed by the assessor and determined to contain adequate flow between response procedures. Records of AOP validations via table-top drill activities were evident.

Revisions to AOPs were still in progress. TF-AOP-003 had a periodic review change pending, and was currently more than two months past due (February 6, 2009) for the change. A justification for continued use was approved on February 13, 2009. Also, the corrective action specified for PER 2008-1788 of September 10, 2008, stated AOPs are currently being reviewed against changes recently completed on Alarm Response Procedures, to identify and corrective any inconsistencies between the two. Completion of the action is due on April 30, 2009.

The AOP change process itself was reviewed to verify an enhanced work process continued to be used for subsequent technical changes to AOPs and to ensure S-102 corrective actions remained identifiable in history files. A Suggestion for Continued Improvement in this area was identified (see below) for consistency in concurrence designations. Specifically, a consistent enhanced work planning/document concurrence approach should be implemented for technical changes to Abnormal Operating Procedures. The corrective actions (CHG-WC-3.1/3.2) designated for the S-102 event specified that Operations, Emergency Preparedness (TFC-OPS-OPER-C-13, Attachment A designator "EP"), Industrial Hygiene (designator "S") and Radiological Control (designator "R"), as a minimum, should be included in the AOP change process. Review of the AOP technical changes made as a result of the S-102 event identified an inconsistent approach to designation and participation of enhanced work planning participants was implemented:

- TF-AOP-005, Rev B-7, contained only an "R" review designator, although the IH Program Manager and Emergency Management/Safeguards and Security Lead also signed the change for concurrence.
- Initial revisions (C-4 and C-5) to TF-AOP-006 before it was combined with TF-AOP-011 and cancelled, contained "E" (Rev C-4, only), "R," and "S," but in each case the Emergency Management/Safeguards and Security Lead also signed the changes for concurrence.
- TF-AOP-011, Rev B-11, contained only an "R" review designator, although the Emergency Management/Safeguards and Security Lead also signed the change for concurrence. The Safety Engineer signature was marked "N/A." Note: Revision C-0 was designated "E," "R," and "S," but was also signed by a delegate for the Emergency Preparedness Lead.
- Approval designators were not available for TF-AOP-015 (Rev B-14) and TF-AOP-018 (B-1) S-102 driven revisions, but in each case a Safety Engineer, Radiological Engineer and Emergency Management/Safeguards and Security Lead concurrence signature was evident.

The "Immediate Recovery Work" process was reviewed and discussed with personnel that would be involved in its implementation. As a result of the S-102 event, the TF-OPS-MAINT-C-01 "Emergency Recovery Work" process was renamed the "Immediate Recovery Work" process with the intent that it be used for events similar in nature to the S-102 event. Appropriately, the process has been infrequently used (personnel interviewed identified no known implementations). Perhaps because of this, personnel knowledge of the process and its application appeared limited, despite evidence of an awareness briefing having been provided to appropriate personnel in February 2008. Some personnel specified to be involved with the implementation process did not appear to be familiar with the process or their roles in it when questioned, and some demonstrated confusion as to who (by name) was being referred to as the actionee when the procedure specified the "Base Operations Manager" and/or the "ESH&Q Manager." Despite training on the process in 2008, it was evident that a number of personnel were either unfamiliar with the process or unclear on who was being designated to perform actions in the procedure (see Suggestion for Continued Improvement, below).

No entries into AOPs were observed by the review team. Therefore, effectiveness was reviewed via personnel interviews and reviews of recent PER information. The information reviewed identified issues with AOP entry and compliance:

- WRPS-PER-2009-0178 (January 27, 2009) identified an issue where TF-AOP-021 was not adequately followed;
- WRPS-PER-2009-0385 (March 11, 2009) identified a Concern and six Findings from a DOE-ORP surveillance in the area of response to abnormal events; and
- WRPS-PER-2009-0584 (April 7, 2009) identified a DOE-ORP FR Finding on failing to enter AOPs in a timely manner.

On April 14, 2009, the actions of TF-AOP-021 were not completed in their entirety when a radio announcement of the event was not made. No PER entry was made on the specifics of the non-compliance, but a PER (WRPS-PER-2009-0662) was entered identifying that TMACS was initially unaware of the shutdown.

In addition, several other procedure compliance issues have been identified in 2009:

- WRPS-PER-2009-0269 identified an instance where a step requiring engineering approval was missed in a work instruction;
- WRPS-PER-2009-0439 identified an issue where a continuous use procedure was not present when conducting the actions of the procedure; and
- WRPS-PER-2009-0471 identified where a DOE-ORP FR twice observed a procedure not being adequately followed.

The assessor noted that more than half of the recent AOP and other procedure non-compliance issues entered into the PER database were identified by oversight personnel external to the contractor's organization. TFC-ESHQ-Q_C-C-01, *Problem Evaluation Request*, Rev E, states, "A PER shall be initiated for conditions that require resolution, trending, cause determination, or identification and tracking of corrective actions." Since the assessors identified Senior Supervisory Watches and other supervisors and managers in the field during work activities, the assessors must assume that either these contractor oversight personnel are not recognizing procedure compliance issues that are occurring, or don't recognize the value of documenting such observations for causal determination, trending, and/or resolution. This issue was most prevalent in the case of WRPS-PER-2009-0662, discussed above, where a missed AOP step was identified by a DNFSB Site Representative. Rather than the contractor entering the item as a procedure non-compliance in PERs, the issue was entered by a TMACS Operator as an observation that TMACS was not being kept informed of alarms. As such, the significance level was designated as "PIE/CIM" ("a suggestion or industry report identifying process improvements, program enhancement, continued quality improvements, or recommendations, or used for evaluation of external lessons learned" – TFC-ESHQ-Q_C-C-01, Table 2) rather than more appropriately, a "PER with Resolution" ("An adverse condition which includes problems, such as failure to comply with the documented safety analysis, technical specifications, DOE orders, regulations, contract requirements, or administrative controls, procedures, instructions, noncompliances that adversely affect tank farm facility system hardware/software operability, reliability, or performance" - TFC-ESHQ-Q_C-C-01, Table 2). The assessor suggests the Tank Operations Contractor should ensure personnel are able to recognize procedure non-compliances and document their identification for causal determination, trending, and/or resolution.

Operations management acknowledged awareness of weaknesses in procedure compliance in general and AOPs specifically. A root and common cause analysis (WRPS Response to Abnormal Events Surveillance S-09-ESQ-TANKFARM-003) for the issues identified in WRPS-PER-2009-0385 above, and DOE-ORP Letter 09-ESQ-082, dated March 11, 2009, established three judgments of need in this area:

- Reestablish a culture committed to procedural compliance, conservative decision making, and questioning attitude;
- Perform procedure reviews for consistency and perform field observations to ensure procedure compliance and effective communications; and
- Strengthen training and qualification requirements relied upon to implement expectations.

The assessor suggests that procedure non-compliance events that have been identified since the root cause analysis has been performed should also be considered when implementing the corrective actions identified in the report (as approved/accepted by DOE-ORP).

The assessor attended the project's "CONOPS Council" meeting. Development of a conduct of operations improvement plan was discussed. The chairman of the council stated the three areas of greatest concern were procedure compliance, communication, and command and control.

Conclusions: AOP revisions to address S-102 lessons learned have been completed and validated via the table-top drill process. Personnel continue to identify issues with AOP content, but management appears to address the issues via accepted processes, and was currently ensuring AOP consistency with Alarm Response Procedures. Consistency in the approach to selection of which organizations participate in AOP concurrence is suggested. Improvement in personnel awareness and knowledge of the "Immediate Recovery Work" process also appears warranted. Finally, procedure compliance in general, and AOP compliance in particular, remain a challenge for the organization. A root cause analysis was recently completed in this area and a conduct of operations improvement plan is in development. Approval and implementation of each should improve performance in this area. Corrective actions of this JON have been completed. However, the corrective actions have not proven entirely effective in preventing recurrence of procedure compliance issues.

Rating:

Partially Effective

Recommendation for Completion:

R-WC-3-1

WRPS should complete the corrective actions to improve Conduct of Operations and response to abnormal events identified by WRPS letter to DOE-ORP, "Washington River Protection Solutions LLC Response to Abnormal Events Surveillance S-09-ESQ-TANKFARM-003, 'Washington River Protection Solutions LLC Root and Common Cause Analysis Results,'" dated April 8, 2009, by the dates specified in the enclosure, and conduct an effectiveness review by the end of fiscal year 2009.

Suggestions for Continued Improvement:

S-WC-3-1
A consistent enhanced work planning/document concurrence approach should be implemented for technical changes to Abnormal Operating Procedures.

S-WC-3-2
The TOC should conduct periodic awareness/proficiency training on the "Immediate Recovery Work" process for those personnel involved in the process.

S-WC-3-3
Procedure non-compliance events identified since the issue of WRPS letter to DOE-ORP, "Washington River Protection Solutions LLC Response to Abnormal Events Surveillance S-09-ESQ-TANKFARM-003, 'Washington River Protection Solutions LLC Root and Common Cause Analysis Results,'" dated April 8, 2009, should be considered when implementing the corrective actions identified in the report.

S-WC-3-4
The Tank Operations Contractor should improve the self-identification and reporting (i.e. per the PER process) of procedure non-compliances to facilitate causal determination, trending, and/or resolution.

Reviewer:

Lead, Kerry Schierman, DOE-RL, Facility Representative
Courtney Blanchard, DOE-ORP, Facility Representative
Joe Sondag, DOE-ORP, Facility Representative
Ron Ciola, DOE-ORP, Facility Representative

Corrective Action Evaluation Form
Type A: WC 4

JON/Finding:
Type A: WC 4, CH2M Hill workers, supervisors, and management need to improve the implementation of the Conduct of Operations Programs as required in the Safety Basis and Conduct of Operations Applicability Matrix, March 20, 2007.

Corrective Actions Reviewed:

CHG-WC-4.1
Conduct field level conduct of operations briefings with all field personnel in WFO, Closure, and ATS

CHG-WC-4.2
Perform a training needs analysis to identify and incorporate conduct of operations/formality of operations lessons learned and operating experiences

CHG-WC-4.3
Develop a training class based on the Training Needs Analysis.

CHG-WC-4.4
Deliver training class to target audience identified in training analysis.

CHG-WC-4.5
Develop and provide briefing to field work supervisors on discrepancies associated with worksite hazard analysis requirements not met per TFC-OPS-MAINT-C-01, Tank Farm Contractor Work Control, prior to the July 27, 2007 waste leak.

CHG-WC-4.6
Modify TFC-OPS-OPER-C-17, Operating Logbooks, to require that an intermittent logbook be maintained for retrieval operations.

CHG-WC-4.7
Revise work control procedure on performing minor maintenance work to clarify when this work control process can be utilized.

Documents Reviewed:

- Final Report FY2008-CH2M-1-0003; CH2M HILL Hanford Group, Inc. Independent Assessment of Corrective Action Plan Implementation for Tank 241-S-102 Waste Spill Investigation and Analysis Reports Midpoint Assessment, February 11 - February 29, 2008
- Safety Basis and Conduct of Operations Applicability Matrix, March 20, 2007
- TFC-OPS-MAINT-C-01; *Tank Farm Contractor Work Control*
- TFC-ESHQ-S_SAF-C-02, *Job Hazards Analysis*

- TFC-OPS-OPER-C-17, *Operating Logbooks*
- TFC-OPS-OPER-C-12, rev. A-7, *Observation and Evaluation of Field Work Supervisor Candidates*
- TFC-ESHQ-IH-STD- 13, rev. A, *Worksite Hazard Analysis*
- Presentations developed to support work control process change personnel briefing requirements
- Presentation provided to Senior Management on the difference between standard and complex work packages
- Various Completed Work Packages
- Various Minor Work Packages
- Base Operations Planning Template
- OA Database Entry 3310

Activities/Operations Observed:

- Base Ops Double Shell Tanks Plan of the Day Meeting
- Base Ops Single Shell Tank Plan of the Day Meeting
- Contractor Morning Status Meeting
- Contractor Daily Release Sheet Meeting
- TFC-09-0439; Install new Drain Seal Assemblies in AZ-101/102A Pit
- WFO-WO-05-002807; Replace Chiller AZ-CW-R-1
- TFC-09-1566-242A HVAC; HMI Loss of Power Alarm Troubleshooting Package
- CLO-07-0729; Remove Jumpers from C-104 pit
- WFO-07-3186; 241-AN Repair Lighting and Replace Disconnects
- TFC-09-1519; 242-A, Dynamic Test Raw Water Pressure Control Valves
- Table Top Drill of Retrieval Operations Emergency Procedures
- CONOPS Improvement Council
- CONOPS Sensitivity Training

Interviews:

- Shift Managers
- Field Work Supervisors
- DST Planning Manager
- SST Planning Manager
- 242-A Facility Manager
- Work Planning Manager Double Shell Tanks
- Work Planning Manager Single Shell Tanks

Results:

Conduct of Operations

The assessors reviewed work in the field as a primary method of determining compliance and knowledge of conduct of operations requirements. There were no deficiencies noted. The assessor focused on several areas, including shift routines and operating practices, training, and procedural compliance.

The assessor noted that Standing Order 07-008, *C-110 Retrieval Operations*, has been in effect since November 2008, and did not have a planned end date. The Standing Order also did not include any wording to indicate when or how it will be cancelled. An earlier version of the Standing Order contained words to this effect -- "this Standing Order will remain in force until a formal organizational change is implemented and the new organizational structure and necessary procedure changes are reviewed by the Chief Operating Officer and determined to satisfy the issue identified in CH2M-PER-2007-1821." Discussions with the interviewees indicated the current Standing Order will remain in effect through the C-110 retrieval period, after which it will be cancelled.

The assessors also attended a "CONOPs Council" meeting. The council was recently created, and meets on a monthly basis. It consists of both management and bargaining unit personnel, however, bargaining unit attendees were not among those at this meeting. TOC management took action to gain bargaining unit attendance at the next meeting. The council addressed multiple conduct of operations issues. During this meeting, they discussed oversight - particularly the management oversight. It was stated at the meeting that the process that directs management oversight requires twelve different forms that could be filled out to document oversight. The associated complexity has potentially impeded managers from going into the field in the past. One attendee created a single form on one sheet of paper, which should promote field time. A conduct of operations improvement plan is being developed by the Operations Shift Manager. According to the Operations Shift Manger, the plan focuses on recent areas of weakness, including procedure compliance, communications, and command and control. The assessor noted that the people in attendance at the CONOPs Council were energetic and proactive. There were many ideas brought to the table, including areas of improvement and potential new team members. Attendees included the Project Operations Manager and Radiological Controls Management.

Assessors attended CONOPs Sensitivity Training. This was not the result of a corrective action, but was conducted proactively by the C-Tank Retrieval and Closure Manager. The discussions centered on procedure compliance and avenues of communication during the retrieval processes. The Radcon Supervisor and Industrial Health Supervisor discussed events and lessons learned from the last retrieval operations and changes for the upcoming retrieval activity. The meeting appeared beneficial.

A review of the Tank Operations Division Operational Awareness database entries showed that conduct of operations briefings on procedural compliance were given to each shift of operators by the Shift Managers.

The overall performance of conduct of operations in the field was adequate. The ongoing efforts of the contractor to improve conduct of operations – the CONOPs Council, Sensitivity Training, CONOPs Improvement Plans – all show the desire of the Tank Operations Contractor to continually improve and increase their performance in this area.

The assessor discussed the intermittent retrieval logbook with the Operating Engineer. The logbook tracks the activities associated with the retrieval operations and is maintained by the

Operating Engineer. The logbook allows a clear, written record of retrieval operations separate from other operations at Tank Farms. The Operating Engineer considered the logbook an effective method of recording this information.

General Work Control

During the S-102 event, work was performed using a troubleshooting document, and the Field Work Supervisor invoked a General Hazard Analysis that did not cover the hazards for the work. It was also determined that the scope of work was not appropriate for electrical work activities. Further, the work was performed using a minor work order which was not released properly. Minor work orders require that the scope of the work be identified in the Work Record of the minor work package prior to release – this was also not completed.

The assessment team reviewed objective evidence presented on ESTARS/IDMS, including briefing packages, which described the problems outlined above, which occurred during the S-102 event, and the improvements made in the hazard analysis process since the event. The slides showed evidence of training on discrepancies vs. expectations and weaknesses. The deliverables also included training rosters by student and instructors, and lists of qualified Field Work Supervisors. The assessor also reviewed a DOE validation review conducted in April 2007, which determined that some training rosters were missing information, including instructor signatures and dates. OA database entry 3310 verifies that the training rosters were corrected after the DOE Facility Representative contacted the contractor with the discrepancy.

The assessment team found that some training packages went above and beyond the requirements for a briefing in that they contained evidence of a knowledge check (written exam) given to the students following the training, and evidence that the training was attended by Operating Engineers as well as the Field Work Supervisors.

TFC-OPS-MAINT-C-01, *Tank Operations Contractor Work Control*, procedure contains many uses of the word "ensure," and in some instances the use of the word is inappropriate as it is a vague, ambiguous action word. The Hanford Site River Protection (CH2M HILL Hanford Group, Inc.) EM-62 Assessment Report, March 2008, cites this deficiency, "WP.2-O-2 The action word 'ensure' was noted to be either misused or over used..." The final deficiency noted in the work control procedure was found in Step 7 of Section 4.4.1.3, minor work orders. It was vague in directing the Field Work Supervisor/worker to "Follow applicable sections" of the procedure.

Telephone Approval for Work Release

The assessment team interviewed the training coordinator for the Field Work Supervisors, Operating Engineers, and Shift Managers. An interview with training personnel and review of documentation concluded that procedure TFC-OPS-OPER-C-12, *Observation and Evaluation of Field Work Supervisor Candidates* – has requirements for evaluating FWS's in the areas of work instructions, hazards identification, work documentation, correcting or modifying work documentation, and Job Hazard Analysis. Interviews with Field Work Supervisors, Shift Managers and Operating Engineers concluded there is a strong general knowledge in these areas.

However, there were differing opinions on whether work release via telephone (telcon) approval was acceptable.

The discrepancy regarding whether telcon approval of work release also differed amongst the two work planning managers, one believed it was not acceptable, while one claimed it was acceptable. The assessors also reviewed minor work procedure TFC-WO-09-0008, which specifically allows telcon SM concurrence for work release in the verbiage of the document.

Some of the interviewees were of the opinion that telcon work release should not be allowed since the verbal information can be recorded differently and the message lost. The Shift Manger on watch and Ops Shift Manager thought that telcon work release was allowed. Note that the S-102 event involved a telcon concurrence for work release.

The assessor suggests a clarification of the telcon practice, whether and when it is allowable, and what signature requirements apply if it is. Currently, there is no direction on the practice of telcon work release in the TFC-OPS-MAINT-C-01; *Tank Operations Contractor Work Control Procedure,* although the assessors reviewed minor work orders that specifically call out telcon work release as an option.

Minor Work and Hazard Assessment

As a result of the S-102 corrective action process, TFC-OPS-MAINT-C-01; *Tank Operations Contractor Work Control Procedure*, was changed to better outline the differences between minor work and non-minor work. Minor work can be performed to standing work orders or minor work orders. A streamlined hazard evaluation is performed for minor work. If not deemed minor work, the activity falls within the "standard work process." The standard work package preparation and approval process requires more rigor than that of minor work.

The different levels of hazard analysis are outlined in TFC-ESHQ-S_SAF-C-02, *Job Hazards Analysis*. Some minor work such as routine work can be performed to a General Hazard Analysis while other minor work, such as non-routine minor work must utilize a Worksite Hazard Analysis. Standard work must be performed to a job hazard analysis checklist, and complex work requires the highest tier of hazard control -- a Safety Plan. The S-102 corrective action plan Type A finding CHG-WC-4.4 required training be conducted to delineate the differences between the hazard reviews for minor work and standard work. Deliverables show objective evidence of training materials and a roster of completion. Interview with the Operations Shift Manager concluded that the training has been incorporated into the qualification process for the Shift Supervisors, Shift Managers, and Operating Engineers.

The assessors reviewed TFC-OPS-MAINT-C-01, *Tank Operations Contractor Work Control Procedure*, and attended the Plan of the Day Meetings to better understand the effectiveness of work control. Work order release is discussed in Section 4.6 of procedure TFC-OPS-MAINT-C-01. It requires that the contractor "develop a daily schedule/release sheet that reflects the work to be performed." This process is coordinated by the Work Maintenance & Integration group. A Daily release sheet contains a list of work items released for work that day. It is derived from a master schedule that is updated as work packages are completed, authorized and prioritized.

Minor work is identified on the Daily Release Sheet as well as non-minor work. Minor Work determination is made by the Field Work Supervisor or the Radcon First Line Supervisor. All minor work is initiated at the Shift Manager's Office by entering the scope of the work into the work record for the package. The Shift Manager reviews the scope of work to determine if it is appropriate. Work Records for Minor Work have a list of standard questions that make it easier to review for work release. The questions guide the Shift Manager, for instance, "work hazard analysis used?", "liquid encountered?", "posted radiological area?". This has been found to be very effective. Finally, if the work is on the Daily Release sheet, the Shift Manager approves it for work. Of note, since S-102 all work is released through one shift office, located at the 200 East Area.

The assessors attended Plan of the Day meetings. The Daily Release Sheet from the current day and following day was reviewed by line item. The status of each job was discussed and complete jobs removed from the list. The Daily Release Sheet for the following day was then compiled.

The assessors interviewed members of the Work Planning and Integration group. The difference between minor work and non-minor work was discussed. The interviewees were consistent in their knowledge, which was detailed. The Scheduler was intimately aware of the process for compiling and approving of work on the Daily Release Sheet. Supervisory personnel in the Work Planning and Integration Group understood the details of the process of approving minor work and the differences between minor and non-minor work. Supervisory personnel also were very familiar with TFC-OPS-MAINT-C-01, *Tank Operations Contractor Work Control Procedure*.

During a pre-job briefing the assessor noted that a worker asked what hazards were present in the farm from other, adjacent jobs. The question was also extended to include adjacent farms, which shows an awareness of hazard analysis for collocated work. Tank Operations Division Facility Representatives recently identified an issue where collocated work presented hazards to an adjacent work crew. The issue resulted in a lessons learned issued to the workforce, and this question during the prejob brief demonstrated the effectiveness of this corrective action and in-depth level of hazard awareness by the workforce.

Troubleshooting

The East Ops Planning Manager, Operations Organization Manager, Operations Shift Manger, and Shift Manager were interviewed. When asked about work control changes since the S-102 event, most were able to point to several Troubleshooting Documents that have been worked recently. The assessor did verify one troubleshooting procedure was correctly implemented and controlled in the field. The planning manager cited AN Farm grounding work as another example of troubleshooting that has been done in accordance with the requirements.

The assessors observed a job where the job had to be stopped due to an inadequate Troubleshooting Plan. The HMI loss of power alarm package failed to be effective in the first step. The FWS commented that there should have been a walk down performed before the Troubleshooting Plan was prepared. The plan was not consistent with the equipment alignment in the field. The assessors also observed a job where the Troubleshooting Plan was workable,

and was prepared in accordance with the requirements. The work replacing the AZ chiller unit proceeded after a Troubleshooting Plan was prepared and worked. It should be noted that the Troubleshooting Plan work was followed by a successful foray into a minor standing work document for Instrumentation Troubleshooting and Repair. This work was accomplished with minor delay.

Of interest, medium risk work packages were required to go through Joint Review Group (JRG) review after S-102. Since then, this requirement has been relaxed to allow the work planning manager to decide if it required JRG review. Some medium risk work has been repetitively performed, and crews are familiar and experienced with them.

One issue the assessors noted is that TFC-OPS-MAINT-C-01, *Tank Operations Contractor Work Control Procedure*, does not define troubleshooting. Definitions for other terms such as routine maintenance are referenced to TFC-ENG-SB-C-03, *Unreviewed Safety Question Process*. Referencing the other procedure complicates the work control process.

Other Improvements since S-102

Since S-102, a Work Instruction Planning Template has been developed that contains standard wording to use for each job, as it applies to the specific work. For instance, if the job requires radcon stop points, this template has the standard wording for that activity. This is very effective at familiarizing the workforce with the requirements that apply to repetitive work practices, and makes the requirements easily recognizable by the Field Work Supervisor.

Immediate Recovery Work

One problem the assessors noted during the review is that Section 4.3 of TFC-OPS-MAINT-C-01, *Tank Farms Contractor Work Control Procedure*, is titled "Immediate Recovery Work." This procedure directs the reader to TFC-ESHQ-RP_RWP-C-04, *Radiological Work Permits*, for details on when this work can be done without a Radiological Work Permit (RWP). However, the RWP procedure cites this work as "Emergency" vice "Recovery" work. The procedures need to be better coordinated.

Also, Section 4.3 of TFC-OPS-MAINT-C-01, *Tank Farms Contractor Work Control*, does not address industrial hygiene controls for Immediate Recovery Work. These controls should be incorporated into the discussion alongside other relevant controls.

Conclusions:

Conduct of Operations:
The overall performance of conduct of operations in the field was adequate. The ongoing efforts of the contractor to improve conduct of operations – the CONOPs Council, Sensitivity Training, CONOPs Improvement Plan – all show the desire of the Tank Operations Contractor to continually improve and increase their performance in this area.

Work Controls:
Work controls are adequate, but work control procedures require review and modification in certain areas. The workforce knowledge of work controls also requires improvement. This review also evaluated the effectiveness of corrective actions for EM-60 Review Report Item 9.

Rating:

Effective

Recommendation for Completion:

None

Suggestions for Continued Improvement:

S-WC-4-1
The TOC should determine if and when telephone approval is acceptable for the release of minor work, and proceduralize the requirements if it is deemed allowable.

S-WC-4-2
The TOC should determine the appropriate level of radiological controls for "Immediate Recovery Work" as discussed in TFC-OPS-MAINT-C-01, *Tank Operations Contractor Work Control*; these controls must mesh with Section 4.10 of TFC-ESHQ-RP_RWP-C-04, *Radiological Work Permits* (i.e. consistent terminology—"immediate recovery" vs "emergency").

S-WC-4-3
The TOC should include a requirement to consider the need to develop industrial hygiene and safety controls in Section 4.3 of TFC-OPS-MAINT-C-01, *Tank Operations Contractor Work Control*, when preparing for "Immediate Recovery Work."

S-WC-4-4
The TOC should include definitions for "troubleshooting" and "routine work" in the work control procedure, TFC-OPS-MAINT-C-01, *Tank Operations Contractor Work Control.*

S-WC-4-5
The TOC should revise Attachment B of TFC-OPS-MAINT-C-01, *Tank Operations Contractor Work Control*, to limit use of the word "ensure" when developing work documents; "ensure" is an ambiguous action word.

S-WC-4-6
The TOC should revise TFC-OPS-MAINT-C-01, *Tank Operations Contractor Work Control*, Section 4.4.1.3, Step 7, to remove ambiguity; the step currently directs the Field Work Supervisor/worker to "Follow applicable sections" of the procedure.

S-WC-4-7
WRPS should develop and conduct work control process training with shift managers and field work supervisors.

Reviewer:

Lead, Ron Ciola, DOE-ORP, Facility Representative
Joe Sondag, DOE-RL, Facility Representative
Kerry Schierman, DOE-RL, Facility Representative

Corrective Action Evaluation Form
Type A JON MS-1

JON/Finding:
Type A JON MS-1 - ORP and CH2M HILL need to review and evaluate the adequacy and implementation of corrective action plans for past events and enforcement actions to the S Tank Farms, and ensure that effective lessons learned processes are performed.

Corrective Actions Reviewed:

All of the following Corrective Actions and associated Objective Evidence files were reviewed:

CHG-MS-1.1
Conduct an independent review to determine the effectiveness of causal analyses and corrective actions taken in response to significant events since January 1, 2003.

CHG-MS-1.2
Develop and implement an assessment plan to periodically evaluate the continued efficacy of the lessons learned program and corrective actions taken in response to significant events.

DOE-MS-1.3
Conduct an evaluation of the contractor's independent review of significant events since January 1, 2003, to ensure the review was properly scoped, at an appropriate depth, adequately captured identified issues, and corrective actions were adequate as a result of the review.

DOE-MS-1.4
The ORP Manager will establish requirements for completion of Type A corrective actions for inclusion in the readiness review plan of action prior to the restart of single shell tank retrieval operations at either S-102 or C-Farm.

Documents Reviewed:

- Type A Accident Investigation Report, The July 27, 2007 Tank 241-S-102 Waste Spill at the Hanford Tank Farms
- Corrective Action Plan for Type A Accident Investigation Report
- FY2008-CH2M-1-0003, CH2M HILL Hanford Group, Inc. Independent Assessment of Corrective Action Plan Implementation for Tank 241-S-102 Waste Spill Investigation and Analysis Reports Midpoint Assessment
- FY2008-CH2M-I-0007, Corrective Action Plan Implementation for Tank 241-S-102 Waste Spill End Point Assessment
- CH2M-PER-2007-1749, Problem Evaluation Request
- CH2M-PER-2007-1749; RES; Ensure effective lessons learned processes are performed
- CH2M-PER-2007-1749.2
- 5-SigPER CAP Strategy, Effectiveness Evaluations of Significant Event Corrective Actions
- TFC-PLN-10, Revision C-3
- TFC-PLN-10, Revision C-4
- TFC-PLN-10, Revision E

- FY2008 CH2MHILL Integrated Assessment Schedule, Rev 13
- FY2009 WRPS Integrated Assessment Schedule, Rev 6
- 7-MS-1, Change Analysis
- 3-RPP-RPT-35553 r1, Causal Analysis and Corrective Action Evaluation Report
- 7-TF-018, Office of River Protection Investigation of ORP Actions related to the Tank S-102 Waste Spill
- Human Performance Improvement Review of the DOE Response to Tank S-102 Tank Waste Spill
- Assessment of ORP TF Oversight, (Gibbs Report)
- Contract No. DE-AC27-99RL14047 - C-109 Readiness Assessment Expectations
- Contract No. DE-AC27-99RL14047 –Request Review and Approval of POA-C109-01, "Single-Shell Tank 241-C-109 Waste Retrieval Resumption and Deployment of Foldtrack® Mobile Retrieval Tool", Revision 0
- Contract No. DE-AC27-99RL14047 –Approval of POA-C109-01, "Single-Shell Tank 241-C-109 Waste Retrieval Resumption and Deployment of Foldtrack® Mobile Retrieval Tool", Revision 1
- Event Investigation Reports:
  - EIR-2008-021
  - EIR-2008-024
  - EIR-2008-025
  - EIR-2009-005
- Occurrence Reporting System Reports:
  - EM-RP--WRPS-TANKFARM-2008-0001
  - EM-RP--WRPS-TANKFARM-2008-0002
  - EM-RP--WRPS-TANKFARM-2008-0003
  - EM-RP--WRPS-TANKFARM-2009-0001
  - EM-RP--WRPS-TANKFARM-2009-0002
  - EM-RP--WRPS-TANKFARM-2009-0003
  - EM-RP--WRPS-TANKFARM-2009-0004
  - EM-RP--WRPS-TANKFARM-2009-0005

Activities/Operations Observed:

None

Interviews:

- WRPS - Base Operations, Operations Manager
- WRPS - Base Operations Engineering Manager, Acting
- WRPS - Operations Specialist/Occurrence Reporting Specialist
- WRPS - Performance Assurance/Corrective Action, Manager
- WRPS - Performance Assurance/Corrective Action, Quality Assurance Engineer
- DOE-ORP - Tank Farm Operations, Director
- DOE-ORP – ESQ, Assistant Manager
- DOE-ORP – Verification and Confirmation Division, Program Manager

Results:

The independent review conducted by the contractor in MS-1.1 to determine the effectiveness of causal analyses and corrective actions taken in response to significant events since January 1, 2003 identified that weaknesses existed in the causal analyses, corrective actions were narrowly scoped, and that there was a heavy reliance on endpoint assessments to evaluate the effectiveness of corrective actions. The Occurrence Reporting database was queried for reports filed since contract transition to WRPS. Of the eight reports filed, four were significance category 4 occurrences, which did not require any type of causal analyses or corrective actions. None of the other four reports requiring causal analysis and corrective actions were submitted as final within 45 days of categorization. One report, categorized on 10/9/08, was still not submitted as final as of 4/21/09. In events where human performance errors were identified, none of the cause codes had couplets identified. In one case, human performance was the single cause code identified, yet there were many unanswered questions based on the unavailability of records listed in the event investigation report. Delays in executing both the PISA and USQ process, in addition to completion of causal analyses appeared to be major contributors to the delays in submitting final occurrence reports.

MS-1.2 tasked the contractor to develop and implement an assessment plan to periodically evaluate the continued efficacy of the lessons learned program and corrective actions taken in response to significant events. The 5-SigPER CAP Strategy, Effectiveness Evaluations of Significant Event Corrective Actions, TFC-PLN-10 Rev E, and both the FY2008 and FY2009 integrated assessment schedules were reviewed. While the schedule contained ORP assessment activities of the lessons learned program, no such evidence could be found for the contractor. One activity, FY2009-ESHQ-M-0123 - Performance Assurance SMP, was found that discussed lessons learned, but did not provide any evaluation of the effectiveness of the program. The FY2009 schedule did contain evidence to support that WRPS is conducting assessments of corrective action effectiveness in regard to significant events.

The ORP review specified in MS-1.3 of the contractor evaluation conducted for MS-1.1, DOE-ORP Review of RPP-RPT-35553, Causal Analysis and Corrective Action Evaluation Report was reviewed and found to adequately summarize the effectiveness of the contractor review. However, a review of events since contract transition indicates a weakness in getting final reports submitted into the ORPS database in a timely manner.

The ORP Manager direction identified in MS-1.4 and transmitted to the contractor in Contract No. DE-AC27-99RL14047 - C-109 Readiness Assessment Expectations was reviewed and found to clearly establish Type A corrective action completion as a prerequisite to the restart of single shell tank retrieval operations at either S-102 or C-Farm.

Conclusions:

Implementation of TFC-PLN-10 did not result in specific assessments of the effectiveness of the lessons learned program as stated in CHG MS-1.2, although WRPS does include lessons learned effectiveness in several other management assessments. The contractor may benefit from including a programmatic assessment that evaluates the overall effectiveness of their lessons learned program that draws from those other various assessments and arrives at a collective program effectiveness determination.

The review of events since contract transition indicates a weakness in getting final reports submitted into the ORPS database in a timely manner. Delays in executing both the PISA and USQ process, in addition to completion of causal analyses appeared to be major contributors to the delays in submitting final occurrence reports. Additionally, information required in update reports including facility manager evaluation could be improved. Coordination between the contractor and DOE-ORP for closure of final occurrence reports needs to be strengthened.

Rating:

Effective

Recommendation for Completion:

None

Suggestions for Continued Improvement:

S-MS.1-1
WRPS should evaluate the occurrence reporting/causal analysis processes in order to improve compliance with the requirements of DOE M 231.1-2, and to improve the timely identification and completion of corrective actions for reportable occurrences.

S-MS.1-2
DOE-ORP and WRPS should collaboratively work to improve the timeliness of final occurrence report submittals.

S-MS.1-3
WRPS should update the FY2009 Integrated Assessment Schedule such that assessments evaluating the continued efficacy of the lessons learned program are conducted.

Reviewer:

Roger Claycomb, DOE-ID, Nuclear and Safety Performance Division

Corrective Action Evaluation Form
Type A JON MS-2

JON/Finding:
Type A MS-2, ORP and CH2M HILL need to improve S-102 waste retrieval oversight to ensure that nuclear safety and other safety requirements are met.

All corrective actions were reviewed except for DOE-MS-2.8 which was reviewed for effectiveness in JON CHG-ENG 2.0.

Documents Reviewed:

- Type A Accident Investigation Report, The July 27, 2007 Tank 241-S-102 Waste Spill at the Hanford Tank Farms
- Corrective Action Plan for Type A Accident Investigation Report
- FY2008-CH2M-1-0003, CH2M HILL Hanford Group, Inc. Independent Assessment of Corrective Action Plan Implementation for Tank 241-S-102 Waste Spill Investigation and Analysis Reports Midpoint Assessment
- FY2008-CH2M-I-0007, Corrective Action Plan Implementation for Tank 241-S-102 Waste Spill End Point Assessment
- 7-TF-018, Office of River Protection Investigation of ORP Actions related to the Tank S-102 Waste Spill
- Human Performance Improvement Review of the DOE Response to Tank S-102 Tank Waste Spill
- Assessment of ORP TF Oversight, (Gibbs Report)
- Letter of Direction to CH2M Hill and AMTF

Activities/Operations Observed:

Observed FRs in plan of the day meetings with the tank farm contractor and sat in on FR daily phone in meeting.

Interviews:

- DOE-ORP Quality Assurance
- Training Consultant to DOE-ORP
- DOE-ORP Tank Farms Facility Representative
- WRPS Quality Assurance Manager
- WRPS Performance Assurance/Corrective Actions Manager
- Director, Tank Farm Operations Division, DOE-ORP
- 222S Facility Representative

Results:

A review of the integrated assessment plans of WRPS and ORP shows an increased emphasis on oversight in general and waste operations specifically. WRPS Quality Assurance Services has assigned Quality Assurance Engineers to different projects and all are qualified to the WRPS program. An increased emphasis on waste transfers as well as maintenance on safety significant equipment and material is being shown. A review of the WRPS nonconformance reports (NCR) log and surveillance log shows an added emphasis in these areas.

Due to contractor changes and associated FR oversight activities, only one FR has been able to participate in offsite assessments and verifications. The requirement remains for each FR to participate in an offsite assessment and verification activities. The FR that has participated in assessments, readiness reviews, and ISM verifications stated that he feels this has been a positive learning experience and feel it has improved their overall skill set in performing oversight activities. Those thoughts are echoed by the FR Supervisor. It is suggested that reviewing participation in these activities be accomplished during annual program self assessments to assure all FRs are given the opportunity to meet these requirements.

A review of the Operational Awareness data base shows a significant increase in FR presence on the back shifts, and mid-shifts through unannounced oversight activities. While no significant findings were identified during the 45 unannounced visits, discussions with tank farm operations personnel showed that they were aware that FRs could show up anytime during operational activities. It is difficult to assess whether this practice has added to the operational effectiveness of the tank farm contractor but it has given new awareness and visibility to the FR program at the tank farms.

A review of the ORP integrated assessment plan and their internal schedule of surveillances by both engineering and QA organizations shows an increase in frequency of assessments and also shows improved contractor oversight of engineering, safety, health, and quality areas. There are also a number of oversight activities that are being performed that are not on the integrated assessment schedule which tends to show independent assessments such as audits. While this may be appropriate there may also be some benefits realized from placing all assessments on this schedule to highlight those areas of interest from ORP. Operational awareness oversight activities could still be accomplished as the needs arise and new priorities emerge.

A review of self ORP assessments performed in FY 2008 Strengthen the ORP internal assessment program to include a minimum of two internal assessments per year performed by ORP Environmental Safety and Quality staff. Self assessments A-08-ESQ-INTERNAL-002: *Self-Assessment of ORP Oversight Program,* A-08-ESQ-INTERNAL-001: *Office of River Protection, Federal Sub-Project Director,* A-08-AMTF-INTERNAL-009: *Facility Representative Program Self Assessment* and S-08-ESQ-INTERNAL-005: *Testing and Storage of HEPA Filters* were reviewed. The assessments were thorough and identified areas for compliance as well as for improvement activities and show an effective self assessment process.

ORP Quality Assurance has added two federal employees and two contractor staff to assist with program and oversight activities, operations has added four FRs (two are currently in the

certification process), and engineering has hired 5 engineers (29 total general engineering positions have been filled). One area that is of concern is that there is no occupational safety specialist listed on the organization chart with one position vacant.

Based on interviews and review of the ORP oversight schedule, the main source of ORP federal oversight at the tank farms seems to be the responsibility of the Facility Representatives. There is little routine presence from the SME staff (Quality Assurance, Industrial Hygiene, Radiation Control, and Safety). This places additional workload on the FR staff. ORP should consider increasing tank farm field presence of SMEs to strengthen field oversight, and to improve support to the FRs. This would result in more frequent interface with tank farm facility representatives and contractor personnel, and would strengthen the overall ORP oversight program.

All scheduled surveillance activities from QA do not appear on the integrated assessment schedule which tends to show only independent assessments such as audits. While this may be appropriate there may also be some benefits realized from placing all assessments on the integrated schedule to highlight those areas of interest from ORP.

A review of the existing contractor process hazard analyses and associated design features for retrieval systems to ensure nuclear safety and other safety requirements are met and evaluation of effectiveness is documented in JON CHG-ENG 2.0.

The assessment of the contractor actions to improve emergency preparedness and abnormal event response for retrieval activities were thorough and included oversight performed during the period March-June 2008 including one unannounced exercise on March 12, 2008, and the scheduled third quarter exercise on June 19, 2008. The assessment verified contractor actions were sufficient to close corrective actions associated with the S-102 emergency response activities.

Conclusions:

Overall, there has been marked improvement in oversight activities in response to the S-102 event. ORP has staffed up to meet oversight demands. The new tank operations contractor, WRPS, has placed increased emphasis on management and support staff (QA, Safety, Engineering, and Nuclear Safety and Management) oversight of retrieval, transfers, general operations, and maintenance activities.

Rating:

Effective

Recommendation for Completion:

None

Suggestions for Continued Improvement:

S-MS.2-1
ORP should increase tank farm field presence of SMEs to strengthen field oversight, and to improve support to the tank farm FRs.

S-MS.2-1
ORP should consider including all QA oversight activities (surveillances) on the integrated assessment schedule (those conducted beyond the established schedule are not normally added to the schedule once completed).

Reviewer:

Greg Hayward, DOE-ID, Nuclear Safety and Performance Division

Corrective Action Evaluation Form
EM-60 4.0

JON/Finding:
EM-60 4.0, The USQ process for the S-102 pump design change did not identify that the redesigned dilution water system and sparge system were "physically connected" to the waste transfer system without being properly isolated as required by the Technical Safety Requirements. Thus, installation of the S-102 pump design change without providing proper isolation of the dilution water and sparge systems from the waste transfer system constituted a violation of the Technical Safety Requirements. Questions about the understanding of "physically connected" to a waste transfer system had arisen earlier during design of water supply lines on other waste pumping systems with centrifugal pumps; these questions had not resulted in any clarification or proposed change to the Technical Safety Requirements.

Corrective Actions Reviewed:

CATPR-01:
Update definition of physically connected in DSA and TSR. In addition to addressing the specific issue with the definition identified in this report, this amendment will integrate changes required to address other leak paths that may not be covered in the current definition of physically connected, and any changes to waste transfer leak controls identified in corrective action ENG-4 of the U.S. Department of Energy Type A Accident Investigation Report for the 241-S-102 Waste Spill.

CATPR-03:
Provide training to Engineers, Operations Engineers, and Shift Managers.

Documents Reviewed:

- Letter Olinger to Fulton, 07-TF-029, *EM-60 Review Report: Hanford Tank S-102 Waste Spill Event, August 2007*
- CH2M-PER-2007-1370.5
- CH2M-PER-2007-1370.7
- Power Point Presentation, Training for Engineers and Operating Engineers, *The Importance of Literal Interpretations of Technical Safety Requirements*
- Letter Fulton to Olinger, CH2M-0800183 R3, Request for Approval of Safety Basis Amendment to Revise Applicability of Waste Transfer Controls, dated July 23, 2008
- TSR Lessons Learned Training for Engineers and OEs, Training Activity Number T07038, October 2007 Revision 00 (includes training roster)

Activities/Operations Observed:

None

Interviews:

- WRPS, Manager Nuclear Safety
- WRPS, Nuclear Safety and Licensing Engineer (3)
- WRPS Manager, Central Design Authority and Standards
- WRPS Engineering Program Specialist, Central Design Authority and Standards

A document review of the corrective actions and evidence files indicates adequate completion of the corrective action. Follow-up interviews were conducted to assess the effectiveness of the corrective actions. The results are that the corrective actions for CH2M-PER-2007-1370.5 and 1370.7 have been effective in addressing the finding.

Conclusions:

Interpretation of a TSR control and definition of "physically connected" was implicated in the design errors that allowed the S-102 leak to occur. Review of the revised safety basis documents indicates clarifications to the "physically connected" definition and the TSR controls have been completed. The power point presentation and lessons learned training provided to retrain contractor personnel on the revisions and the reason for the TSR violation was clear and concise. These corrective actions are judged to be effective.

Rating:

Effective

Recommendation for Completion:

None

Suggestions for Continued Improvement:

None

Reviewer:

Jacquelyn Carrozza, DOE-ID, Nuclear Safety and Performance

Corrective Action Evaluation Form
EM-60 6.0

JON/Finding: EM-60 (6)

Corrective Actions Reviewed:

EM-60 (6.1)
Issue a Just in Time Lessons Learned (JIT-LL) to all managers on the less than adequate extent of condition review performed for PER-2005-3379.

EM-60 (6.2)
Brief the ESRB on the lessons learned from the less than adequate extent of condition review for PER-2005-3379.

EM-60 (6.3)
Brief Corrective Action Management Operations Specialists on expectations for adequate extent of condition reviews.

EM-60 (6.4)
Conduct monthly Management Observation Program (MOP) assessment evaluating the quality of resolutions for PERs with Resolution, including the quality of extent of condition reviews, causal analysis and corrective action plans.

Documents Reviewed:

- Just in Time Lessons Learned 07-040, Extent of Conditions Reviews
- Executive Safety Review Board Meeting Minutes 2007-14 from August 30, 2007
- Apparent Cause Analysis Course Completion Roster from October 12, 2007
- Management Observation Checklist for *Quality of PER Extent of Condition and Apparent Cause Analysis*, dated October 31, 2007
- Management Observation Checklist for *Quality of PER Extent of Condition and Apparent Cause Analysis*, dated November 29, 2007
- Management Observation Checklist for *Quality of PER Extent of Condition and Apparent Cause Analysis*, dated December 27, 2007
- TFC-ESHQ-Q_C-C-01, *Problem Evaluation Request*, Rev E

Activities/Operations Observed:

None

Interviews:

- Operations Support Specialist
- Quality Assurance Engineer

Results:

The assessor verified the JIT-LL adequately identified the concern stated and provided reasonable lessons learned. He also verified, via meeting minutes, that the lessons learned were discussed with the ESRB in August 2007, and briefings were provided to Corrective Action Management Operations Specialists in October 2007.

Three Management Observation activities were conducted in consecutive months in 2007, to review the quality of PER extent of condition and apparent cause analysis. Each report identified improvement from the previous one. The final report, from December 2007, concluded, "This MOP indicates a significant improvement of the conduct and documentation of apparent cause analysis, although refresher briefings are required to bring the quality up to current expectations. Responsible managers are making a conscientious effort and the quality of the PERs with resolution will continue to be monitored."

A recent revision to TFC-ESHQ-Q_C-C-01 modified the PER process to integrate Performance Assurance. After the PER screening, Performance Assurance reviews the screen to validate the results. Further, upon completion of the corrective actions, Performance Assurance also validates satisfactory completion. Because the revision to TFC-ESHQ-Q_C-C-01 was issued March 24, 2009, effectiveness of the process change cannot be definitively measured, but the process has been in place informally for several months and quality improvements are being noted as a result.

Conclusions:

Corrective actions were completed as designated. TFC-ESHQ-Q_C-C-01 was recently revised to insert Performance Assurance into the process to assure process compliance and quality standards. This should drive continued improvement.

Rating:

Effective

Recommendation for Completion:

None

Suggestions for Continued Improvement:

None

Reviewer:

Kerry Schierman, DOE-RL, Facility Representative

Corrective Action Evaluation Form
EM-60 10.1

JON/FINDING:
EM-60 10.1 - As identified in the EM-60 Review Report, titled "Hanford Tank S-102 Waste Spill Event" item #EM-60-23 noted that, "According to contractor organization charts, the Closure Shift Operations Manager is not directly in the Chain of Command for the Closure Operations tank farm operators." This PER has been written to address this issue.

Corrective Actions Reviewed:

CA-1
Realign the CO organization such that persons performing waste retrieval transfer operations report to a single manager.

Documents Reviewed:

- PER-CH2M-PER-2007-1821
- Causal Analysis
- Final Report FY2008-CH2M-1-0003; CH2M HILL Hanford Group, Inc. Independent Assessment of Corrective Action Plan Implementation for Tank 241-S-102 Waste Spill Investigation and Analysis Reports Midpoint Assessment, February 11 - February 29, 2008.
- TO-220-113; Over-Ground Transfer from 241-C-110 to 241-AN-106 and Sluicing of Tank 241-C-110
- Standing Order CO-07-008, Original Revision; Chain of Command During Retrieval Operations
- Standing Order CO-07-008, Rev 8; C-110 Retrieval Operations
- Course # 35E043; Emergency Preparedness Post Drill Evaluation; Contaminated Worker C-Farm
- TFC-OPS-DRILL-004; Emergency Preparedness Post Drill Evaluation; Response to a Tank Waste Spill,
- Operational Readiness Checklist Single-Shell Tank 241-C-110 Waste Retrieval and Transfer to Double Shell tank 241-AN-106.
- Operational Awareness Database

Activities/Operations Observed:

- TFC-09-0439; Install new Drain Seal Assemblies in AZ-101/102A Pit
- WFO-WO-05-002807; Replace Chiller AZ-CW-R-1

Interviews:

- Operations Organization Manager
- Closure Operations Manager
- Closure Project Manager

- Operating Engineer
- Security and Emergency Services/Events Investigation personnel
- Mr. Jerry Long, CH2MHILL VP of Operations during the S-102 event
- Mr. Ted Jarecki, CH2MHILL Waste Feed Operations Shift Manager during the S-102 event

Results:

Analysis of the S-102 event determined that the Closure Operations organization structure reports up through three Operations Directors during a retrieval event. The analysis included an extent of condition, which was performed for other areas at the site. Waste feed operations reported through one position at the time of the event, and was an example of the benefits of a single contact roll-up position, which was conducive to clear concise communications and help to ensure overall good conduct of operations. Organizational changes were made to realign the closure organization to report to one person. An Operational Awareness Database entry validates these changes were made, which the assessors verified during the review. Other changes were made to help streamline the organization, such as consolidating both shift managers' offices into a single shift office at MO-268, which eventually included consolidation of work release into the same office.

The assessor reviewed Standing Order CO-07-008, Rev 8, which clarified the Chain of Command for the activity of performing retrieval operations and differentiates it from the management chain of the Retrieval Operations Organization as follows:

> "During Modified Sluicing, the Chain of Command is from the Retrieval Operations Engineer, to the Base Operations Senior Shift Manager. During any off-normal response, this same Chain of Command is to be followed. The Retrieval Operations Engineer will provide information and guidance, but the Base Operations Shift Manager will be the final authority of any path forward."

The Standing Order has been expanded in scope since originally issued. When originally issued in November of 2007, its title reflected its sole purpose, "Chain of Command During Retrieval Operations", which was limited to addressing these changes. At the time of this assessment, 8 revisions have been issued, and the scope of the Standing Order has been expanded to also include retrieval control requirements, including radiological monitoring information, Senior Supervisory Watch information, and the use of cameras during tank waste retrievals.

Revision 8 of the Standing Order also did not include any wording to indicate when or how it will be cancelled. The original Standing Order contained words to this effect -- "this Standing Order will remain in force until a formal organizational change is implemented and the new organizational structure and necessary procedure changes are reviewed by the Chief Operating Officer and determined to satisfy the issue identified in CH2M-PER-2007-1821". Discussions with the interviewees indicate that the current Standing Order will remain in effect through the C-110 retrieval period, after which it will be cancelled. During the next retrieval project, the Standing Order will either be reinstituted per a prerequisite in the retrieval procedure, or the requirements and direction from the Standing Order will be incorporated directly into the retrieval procedure. Using a standing order format is beneficial in that it is easily changed, which provides flexibility. This plan was not in writing, but the contractor has committed to

performing a level 3 Readiness Assessment prior to the next retrieval operation, scheduled at C-104. The level 3 RA will include an Operational Readiness Checklist, which is the correct vehicle for ensuring the Chain of Command requirements are clearly outlined either in a Standing Order or the retrieval procedure. A check of the Operational Readiness Checklist for the C-110 project showed that the roles and responsibilities were discussed in separate line items, one of which reads,

> "**Roles, responsibilities and reporting relationships** have been established for safe accomplishment of work related to the project/activity (via administrative procedures, organization charts, position descriptions, training programs, and internal memoranda)

Interviews with personnel showed a strong knowledge of the Chain of Command requirements during retrieval. The Closure Operating Engineer indicated that he was provided training on the proper Chain of Command during retrieval.

The assessors also interviewed emergency drill personnel, and reviewed drill reports, which indicated that the Chain of Command changes were also tested during abnormal event drills. The drill reports reviewed showed that the changes made to consolidate shift managers offices, and the training and method of employing the new organizational requirements was effective.

Conclusions:

The Standing Order which incorporated the requirements for the Chain of Command is an effective method of codifying the requirements. The requirements have been employed via training, and drills have verified the effectiveness of the changes.

Rating:

Effective

Recommendation for Completion:

None

Suggestions for Continued Improvement:

S-EM-60 10.1-1
Standing Order 07-008 should be revised to include a statement directing the length of time the Standing Order will remain in effect, and how the requirements of the order will be captured for future projects.

Reviewer:

Ron Ciola, DOE-ORP, Facility Representative

Corrective Action Evaluation Form
EM-60 11.0

JON/Finding:
EM-60 11, (Pages 7-8 of Enclosure to DOE-ORP Letter 07-TF-029, *EM-60 Review Report: Hanford Tank S-102 Waste Spill Event, August 2007*)

When Waste Transfer operations were commenced during the dayshift prior to the spill, the S-102 pump was started with the discharge valve closed because the specific step in the operating procedure to ensure the discharge valve was open was not performed. As a result the pump tripped. Waste transfer operations were recommenced about 30 minutes after the mispositioned valve was discovered, without performing an immediate critique of the event on shift.

The operating procedure states that high discharge pressure may result in pump damage. The pump is a positive displacement pump, which is capable of developing very high discharge pressure when operated with the discharge valve shut. There was no detailed assessment of the potential pump or waste transfer system damage performed prior to restarting the pump and commencing waste transfer.

Corrective Actions Reviewed:

CH2M-PER-2007-1299.1: Engineering perform and document a review of this event, as related to potential piping stress between the S-102 pump and the V-106 valve, including the V-106 valve to determine if any equipment damage resulted.

Documents Reviewed:

- TF-07-025, *Technical Evaluation for the S-102 Riser 7 Seepex Retrieval Pump*

Activities/Operations Observed:

None

Interviews:

- Acting Manager, West System Engineering, Washington River Protection Solutions

Results:

A document review of the corrective actions and evidence files indicates adequate completion of the corrective action. Follow-up interviews were conducted to assess the effectiveness of the corrective actions. The results are that the corrective actions for CH2M-PER-2007-1299.1 have been effective in addressing the finding.

Conclusions:

The EM-60 Review Report discussion concerning procedure execution issues was addressed separately via CH2M-PER-2007-1737 as part of the response to JON-ENG-1 of the DOE Type A Investigation. The engineering analysis of the overpressure event showed that the pump, valve V-106, and all discharge piping and hose components were designed and tested for pressures well in excess of the pressure actually developed during the event. There was no damage to them. After the event, DOE decided to abandon the Seepex pump and pursue waste retrieval in Tank S-102 using different technology. Hence the piping and electrical systems for the Seepex pump were removed and there will be no further use of the piping or valve manifold. The corrective actions are considered effective in resolving the EM-60 trip report issue.

Rating:

Effective

Recommendation for Completion:

None

Suggestions for Continued Improvement:

None

Reviewer:

Earl Hughes, DOE-HQ, Office of Health, Safety and Security

Corrective Action Evaluation Form
RCA JON-5

JON/Finding:
RCA JON-5,
RC-01 – Engineering Design Less Than Adequate (LTA)
The S-102 WRS design process was deficient. Specifically, LTA hazards evaluation that did not address the potential waste transfer misroute accident scenario in the DSA. Additionally, the design was not re-evaluated following the radiological contamination of support systems in C Farm in 2005.

Several changes to processes and hardware were made starting in late 2002 that culminated in the installation and operation in S-102 of a WRS that was not designed to prevent or contain a waste leak from a raw water supply hose. Other changes, such as a revision to CH2M HILL's Water Quality Standard in 2004, changes in S-102 retrieval system configurations, and modifications to the Seepex pump were not adequately evaluated.

RC-02 – Management of Change LTA
The change in reverse pump motor speed from 15 to 45 Hz which increased suction cavity pressure by a factor of nine, the strainer plate configuration which reduced the available inlet/outlet surface area by greater than 50%, and relocation of the dilution line output port in Seepex #2 were not adequately analyzed. Although efforts were made to analyze the changes made between to two pumps, the process used was informal and the results were not reviewed or approved by S-Farm managers.

When Seepex #1 was in operation, a rotary viper was installed in Riser 2 approximately two feet from the pump suction in order clear the pump suction and to provide an area of waste slurry around the suction. When Seepex #2 was installed, the rotary viper was removed and a camera was installed in Riser 2. The lack of ability to maintain a cavity or pool around the pump suction was not adequately evaluated.

JON-5: Conduct Contractor Readiness Assessment for retrievals prior to resuming operations.

Corrective Actions Reviewed:

JON-5.1
Update the Startup Notification Report (SNR) to require Level 2 Readiness Assessments prior to commencing the first retrievals in S-Farm (S-102) and C-Farm (C-109) and a Level 3 Readiness Assessment for the C-104 retrieval. Obtain DOE ORP approval of the revised SNR.

JON-5.2
Conduct Level 2 Readiness Assessment for tank 241-S-102 retrieval. Withdraw justification: The level of required Readiness Assessment has been identified in the Startup Notification Report and will be updated based on project schedules.

JON-5.3
Conduct Level 2 Readiness Assessment for tank 241-C-109 retrieval.

JON-5.4
Conduct Level 3 Readiness Assessment for tank 241-C-104 retrieval. Withdraw justification: The level of required Readiness Assessment has been identified in the Startup Notification Report and will be updated based on project schedules.

Documents Reviewed:

- CH2MHILL Letter CH2M-0303291.16 Reissue, Quarterly Startup Notification Report (SNR), dated September 26, 2007
- DOE-ORP Letter 07-TOD-100, SNR Approval, dated September 27, 2007
- CH2MHILL Letter CH2M-0303291.17, Quarterly SNR, dated December 20, 2007
- CH2MHILL Letter CH2M-0303291.18, Amended SNR, dated February 6, 2008
- DOE-ORP Letter 08-TOD-018, SNR Approval, dated February 19, 2008
- CH2MHILL Letter CH2M-0303291.19, Quarterly SNR, dated March 20, 2008
- DOE-ORP Letter 08-TOD-034, SNR Approval, dated March 31, 2008
- CH2MHILL Letter CH2M-0303291.20, Quarterly SNR, dated June 25, 2008
- DOE-ORP Letter 08-TOD-063, SNR Approval, dated July 8, 2008
- CH2MHILL Letter CH2M-0303291.21, Quarterly SNR, dated August 15, 2008
- DOE-ORP Letter 08-TPD-067, SNR Receipt Acknowledgment, dated September 29, 2008
- WRPS Letter WRPS-0800239, Quarterly SNR, dated December 10, 2008
- DOE-ORP Letter 08-TPD-094, SNR Approval, dated December 22, 2008
- WRPS Letter WRPS-0900325, Clarification of Commitment for a Readiness Assessment to Start Retrieval From Single-Shell Tanks 241-C-110 and 241-C-104, dated March 16, 2009
- WRPS Letter WRPS-0900385, Quarterly SNR, dated March 18, 2009
- DOE-ORP Letter 09-TPD-024, SNR Approval, dated March 30, 2009
- *Contractor Readiness Assessment Report for the Single Shell Tank 241-C-109 Waste Retrieval Resumption and Deployment of FOLDTRACK Mobile Retrieval Tool*, Rev 1, dated May 8, 2008

Activities/Operations Observed:

None

Interviews:

- Construction and Commissioning Operational Readiness Lead
- Quality Assurance Engineer

Results:

The corrective actions designated utilized the startup process readiness reviews to verify engineering design and management of change processes were functioning adequately for subsequent retrieval design activities. Although that process has proven successful in identifying issues and returning them for correction prior to authorization for startup, using readiness reviews as a quality control mechanism was not the optimal long-term method to establish quality. Recognizing this, the Contractor also designated JON-2 to provide detailed guidance/criteria for the CH2M HILL oversight of subcontracted engineering design including input and output documents, and JON-6 to adopt a Management of Change process similar to that described in Occupational Safety and Health Administration (OSHA) standard 29 CFR 1910.119, *Process Safety Management of Highly Hazardous Chemicals*.

The initial SNR issued following the event met the conditions specified in JON-5.1. A Readiness Assessment was completed for tank 241-C-109, as specified (JON-5.3). However, subsequent SNR reports withdrew specific Readiness Assessment designations for 241-S-102 and 241-C-104 retrieval activities. Correspondingly, JON-5.2 and JON-5.4 were withdrawn, justified by a statement that readiness activities had been identified in the SNR and would be updated based upon project schedules, via that vehicle. 241-S-102 retrieval activity was removed from the SNR in September 2008, based upon no intention to initiate the activity in Fiscal Year 2009. 241-C-104 was removed from the SNR in March 2009, based upon approval of an Activity Description that designated an Operational Readiness Checklist as the appropriate level of readiness validation. DOE-ORP approved each of the SNR changes via letter.

Regardless, corrective actions designated for JON-2 and JON-6 were completed, establishing the more appropriate mechanisms to validate engineering design and manage change within those processes, restoring the readiness review process to verification activity. JON-2 corrective actions were validated elsewhere in this report. JON-6 corrective actions were validated via equivalent corrective actions for Type A ENG-2, also elsewhere within this report.

Conclusions:

The corrective actions taken to address RCA JON-5 were adequate to assure short-term success in establishing quality in engineering design and change management. Long-term success will be measured by the effectiveness of JON-2 and JON-6, which were not evaluated for JON-5, but were evaluated elsewhere within this report (see above discussion). This corrective action is being designated as effective as it proved an acceptable method for ensuring engineering design and management of change were acceptable in the specific short-term applications designated.

Rating:

Effective

Recommendation for Completion:

None

Suggestions for Continued Improvement:

None

Reviewer:

Kerry Schierman, DOE-RL, Facility Representative

Corrective Action Evaluation Form
RCA JON-8

JON/Finding:
RCA JON-8, CC-01 – Formality of Operations LTA - The potential for tank waste to migrate into tank-connected retrieval support systems in C-Farm was identified in 2005; however the documented extent of condition review for that issue was not reviewed by Operations. This was a missed opportunity to identify and correct the system configuration. This and other examples of informality and LTA implementation of Conduct of Operations (COO), such as not maintaining an S-Farm shift log, and imprecise communications, combined to create a culture that resulted in failure to recognize the initial indications of the spill.

JON-8 – Perform Human Performance Improvement (HPI) review of waste transfer operating procedures

Corrective Actions Reviewed:

JON-8.1.2 – Utilizing workers who perform transfers and at least two qualified HPI champions revise at least 3 transfer procedures to incorporate lessons learned from the S-102 leak event.

JON-8.1.3 – Incorporate the lessons learned from completion of action JON 8.1.2, into procedure TFC-OPS-OPER-C-13 (Technical Procedure Control and Use) to enhance implementation of HPI philosophy.

Documents Reviewed:

- TFC-OPS-OPER-STD-01 rev A-2, *Technical Procedure Format and Preparation Standard*;
- TFC-OPS-OPER-STD-01 rev A-4, *Technical Procedure Format and Preparation Standard*;
- A-6002-909 (REV 3), *Verification/Validation (V&V) Checklist*;
- A-6002-909 (REV 6), *Verification/Validation (V&V) Checklist*;
- TO-220-110, A-7, *Over Ground Transfer From 241-C-108 to 241-AN-106 and Sluicing of Tank 241-C-108*
- TO-220-112, B-O, *Over Ground Transfer From 241-C-109 to 241-AN-106 and Sluicing of Tank 241-C-109*
- TO-XXX-XXX, A-O (DST to DST Transfer Template), *SENDTANK TO RECEIVE TANK*
- TO-220-113, A-10, *Over-Ground Transfer from 241-C-110 to 241-AN-106 and Sluicing of Tank 241-C-110*;
- TFC-OPS-MAINT-C-01, rev N-9, *Tank Operations Contractor Work Control*;
- A-6004-102 (04/06), *Team Review Meeting Checklist*;
- TFC-WO-0x-xxxx, *Closure Operations Work Control Template*

Activities/Operations Observed:

None

Interviews:

- Retrieval and Closure Work Control Manager
- ESH&Q SST Manager

Results:

The evidence files and documentation for JON-8 corrective actions 8.1.2 and 8.1.3 indicated that all corrective actions have been adequately completed and closed out. The JON 8.1.2 file contained three waste transfer procedures that were reviewed and revised; however, it was unclear as to what specific S-102 lessons learned were actually incorporated. The current ESH&Q SST Manager led the review and explained that a meeting with S-102 operators and managers was held to discuss what changes were needed for subsequent transfer procedures. The intent of the meeting participants was to identify problems with the S-102 transfer procedure and to address them in changes to the three transfer procedures. The file also contained comments and improvements to the procedures identified during the review with the HPI checklist.

The JON 8.1.3 corrective action evidence file contained highlighted changes to the *Verification and Validation (V&V) Checklist* and changes to procedure TFC-OPS-OPER-STD-01, *Technical Procedure Format and Preparation Standard*. The corrective action identified that lessons learned from the completion of action JON 8.1.2 would be incorporated into procedure TFC-OPS-OPER-C-13, *Technical Procedure Control and Use*. Changes to this procedure were not required since changes to TFC-OPS-OPER-STD-01, *Technical Procedure Format and Preparation Standard* were more applicable. This determination appeared appropriate since procedure development is where HPI error prevention techniques should be incorporated. Changes made to TFC-OPS-OPER-STD-01 rev A-2, *Technical Procedure Format and Preparation Standard* included adding the concept of "critical task" and clarification of verb usage (e.g., "ensure"). These changes have been maintained in the latest revision.

The current C-110 retrieval procedure was reviewed and it contained appropriate identification of critical tasks, Warning statements and Caution statements. The procedure is generally well written.

In the current revision to Form A-6002-909 (REV 6), *Verification/Validation (V&V) Checklist* the Technical Authority section no longer contains checklist item, "Have critical tasks been identified?" This item was on revision 3 as a corrective action and there was no evidence or justification for its removal.

Procedure TFC-OPS-MAINT-C-01, rev N-9, *Tank Operations Contractor Work Control* was not part of the evidence file but was reviewed to assess if HPI error prevention techniques are considered for work instructions. Warning and Caution statements are addressed among other

things, but there is no guidance for critical tasks. However, the *Closure Operations Work Control Template* and *Team Review Meeting Checklist* provided evidence that work instructions address critical tasks.

Conclusions:

Although the assessor was unable to determine if specific, applicable lessons learned from the S-102 leak event were incorporated into the revised waste transfer procedures (no crosswalk was developed or maintained), the waste transfer procedures reviewed contained appropriate identification of critical tasks and are well written. Procedure TFC-OPS-OPER-STD-01, *Technical Procedure Format and Preparation Standard* contained adequate guidance for incorporating critical tasks and other error prevention techniques. The V&V checklist was generally adequate; however the critical task checklist item identified in JON-8.1.3 was not maintained for the Technical Authority. Finally, a template for critical tasks is part of the work instruction development process and is reviewed in team meetings; however, the guidance in TFC-OPS-MAINT-C-01, *Tank Operations Contractor Work Control* does not address critical task in the work instruction writer's guide.

Rating:

Effective

Recommendation for Completion:

None

Suggestions for Continued Improvement:

S-RCA-JON-8-1
Form A-6002-909, *Verification/Validation (V&V) Checklist* should be updated to require the Technical Authority to ensure critical tasks have been identified.

S-RCA-JON-8-2
Procedure TFC-OPS-MAINT-C-01, *Tank Operations Contractor Work Control* should contain critical task guidance.

Reviewer:

Joe Sondag, DOE-ORP, Facility Representative

Corrective Action Evaluation Form
RCA JON-9

JON/Finding: RCA JON-9

CC-02 – Radiological Controls Survey Techniques LTA
Open window beta radiation readings were not taken during initial indication of HRA, and a review of survey records indicate that this is a widespread problem.

Had beta radiation measurements been taken the leak may have been identified at about 0200 on July 27.

JON-9 – Conduct training for HPTs, RadCon FLMs, and Radiological Engineers on the expectations for the conduct and recording of radiological surveys and on the conduct of RadCon deficiencies.

Corrective Actions Reviewed:

JON 9.1 – Issue Lessons Learned regarding S-102 radiation monitoring deficiency pertaining to failure to perform both window open and window closed radiation measurements.

JON 9.2 – Brief Health Physic Technicians & First Line Managers on Just in Time/Lessons Learned 07-037 and procedural requirements to perform Window Open and Window Closed radiation measurements when performing radiation monitoring.

JON 9.3 – Revise RO-20 On the Job Training to include guidance from RO-3B On the Job Training regarding instrument operating technique to begin radiation measurements with the window open.

JON 9.4 – Brief Health Physics Technicians and Radiological Control First Line Managers on revised RO-20 On the Job Training.

JON 9.5 – Revise Oral Board/Performance Demonstration scenarios to require Health Physics Technicians to monitor both window open and window closed radiation levels.

JON 9.6 – Perform assessment within the Radiological Control Projects to verify radiation surveys include both window open and window closed readings including a review of 10% of radiological survey reports completed for the previous three months to verify window open and window closed readings were documented and Deep Dose Equivalent and Shallow Dose Equivalent readings were accurately calculated.

JON 9.7 – Incorporate process to evaluate and document radiation monitoring requirements (including evaluation of the need for Area Radiation Monitoring) into procedure TFC-ESHQ-RP_ADM-P-01, "Radiological Monitoring During Waste Transfers and Waste Pump Maintenance Activities".

JON 9.7.1 – Brief end users on revised TFC-ESHQ-RP_ADM-P-01, Radiological Monitoring During Waste Transfers and Waste Pump Maintenance Activities procedure and associated TSR leak detection and Radiological Control monitoring requirements.

JON 9.7.2 – Review all active waste transfer procedures and revise, as necessary, according to revised version of TFC-ESHQ-RP_ADM-P-01 "Radiological Monitoring During Waste Transfers and Waste Pump Maintenance Activities".

Documents Reviewed:

- Just in Time/Lessons Learned 07-037, (*Closed Window Radiation Readings May Be Only Half the Story*)
- HPT attendance rosters for S-102 Lessons Learned briefing
- RCT Site Generic OJT Program, OJT Instructor Guide and Student Guide for Course Number 022503, Task 022503 – *Operation of the Eberline RO-20 Survey Meter*
- Activity Tracking Information Sheet and the OJT Briefing Material for RO-20 On the Job Training
- HPT Course Completion Rosters for OJT Briefing Material for RO-20 On the Job Training
- CH2M Hill Interoffice Memorandum, 79A00-LML-08-018, *Scenario Review*
- CH2M Hill Interoffice Memorandum, 79A00-LML-08-015, *Radiological Control Oral Examination Board Personnel*
- CH2M Hill Management Assessment FY2008-SHQ-S-0343, *Verification of Window-Open and Window-Closed Radiation Readings*
- Lesson Plan for Course # 351038, *Radiological Monitoring for Waste Transfers*
- Training Course Materials for #351038 Rev. 0801.0, *Radiological Monitoring for Waste Transfers*
- Course completion roster for *Radiological Monitoring During Waste Transfers Course 351038*
- *241-C-110 Transfer Survey Worksheet*
- Training materials for course number 356431, *HPT Radiological Monitoring for Waste Transfers – Walkdown Checklist*
- Training Materials for course number 356429, *HPT Radiological Monitoring for Waste Transfers – Classroom*
- Internal Memorandum WRPS-0900119, dated January 20, 2009, *Completion of Training Requirements for Health Physic Technician Support of 241-C-110 Retrieval Operations*
- RPP-PLAN-35830, rev. 5, *Radiological Control Monitoring Plan for Tank 241-C-110 to Tank 241-AN-106 Waste Transfer*
- Task No. COO-VAR6, Rev.2, *Radiological Control Scheduled Radiation Survey Task Description*
- Radiological Survey Reports: COC 001465, COC 001467, COC 001476, COC 001477, COC 001479, COC 001480, COC 001481, COC 001487, COC 001488 and COC 001491
- TO-220-113, *Over-Ground Transfer from 241-C-110 to 241-AN-106 and Sluicing of Tank 241-C-110*
- TFC-ESHQ-RP_ADM-P-01, *Radiological Monitoring During Waste Transfers and Waste Pump Maintenance Activities*

Activities/Operations Observed:

- Radiation surveys performed by HPTs using the RO20 during 241-C-104 construction work and 241-C-110 Install/Remove Ops Cameras at Risers 3 & 6.
- Briefing and field walk down of the 241-C-110 to 241-AN-106 waste retrieval system for HPTs in training for C-110 retrieval operations (course number 356431, "HPT Radiological Monitoring for Waste Transfers – Walkdown Checklist.")

Interviews:

- Radiological Controls First Line Supervisors (3)
- Health Physics Technicians (7)

Results:

The evidence files and documentation for JON-9 corrective action 9.1 through 9.7 indicated that all corrective actions have been adequately completed and closed out. Corrective actions to address less than adequate survey techniques included a briefing to existing HPTs on the S-102 Lessons Learned and the HPT instructor and trainee guides for operating the RO-20 were updated. In addition, training was implemented for the Technical Safety Requirement monitoring requirements, radiological controls requirements and potential indications of waste confinement failure for HPT monitoring on the waste transfer system.

During C-104 construction work and the camera work in the C-110 risers, proper use of the RO-20 was observed by HPTs and they were knowledgeable of the importance of the beta window open measurement. Two qualified HPTs and their first line supervisor covered the Radiological Monitoring Plan during a field walk down of the C-110 waste transfer system with newly assigned HPTs. Survey locations, anticipated dose rates and the upset condition dose rates were discussed. The field walk down appeared to be an effective tool for the HPT trainees since indications of a waste leak were discussed in detail.

Radiological Survey Reports reviewed for C-110 retrieval indicated that beta window open dose rate surveys were conducted. However, four of the 10 RSRs contained transcription errors. For example, on RSR COC 001467, a beta correction factor of "0.6" was entered instead of "2" and on RSRs COC 001465, 001479 and 001491 neutron dose rate values were entered; however, neutron surveys were not performed. Survey data collected in the field is documented on the 241-C-110 Transfer Survey Worksheet, an uncontrolled document, and this information is transcribed to the RSR form.

Conclusions:

The corrective actions taken to address RCA JON-9 were adequate to assure that HPTs are trained on the proper survey techniques when using the RO-20 gamma radiation survey instrument. The HPT training and qualification materials were updated to reflect the need for a Beta Window Open measurement and for HPTs to discuss the importance for it. Additionally, the HPT Radiological Monitoring training for waste transfers and walk down checklist provided examples of what could be an indication of a leak. This corrective action is being designated as effective based on the rigor of the training provided for existing qualified HPTs and for new HPTs assigned to waste retrieval operations. However, the 241-C-110 Transfer Survey Worksheet should be reviewed or controlled to preclude errors.

Rating:

Effective

Recommendation for Completion:

None

Suggestions for Continued Improvement:

S-JON-9-1
The 241-C-110 Transfer Survey Worksheet should be a controlled document/form to ensure that transcription errors are prevented.

Reviewer:

Joe Sondag, DOE-ORP, Facility Representative

Corrective Action Evaluation Form
RCA JON-13

JON/Finding: RCA JON-13

CC-06 – Training LTA
Maintenance and RadCon personnel supporting S-102 retrievals were unfamiliar with the process. Had RadCon personnel supporting the project been made aware of the fact that 80 mrem/hr on contact with the riser extension was the maximum estimated radiation levels during normal operations, then the 200 mrem/hr indication at 10-12 feet should have prompted immediate reporting of the spill.

JON-13: Develop and conduct training for designated operations support personnel involved in the operation, maintenance, and monitoring of process equipment.

Corrective Actions Reviewed:

JON-13.1 – A training needs analysis for operations and support personnel involved in the operation, maintenance, and monitoring of waste transfer and retrieval process equipment, including but not limited to operating parameters and alarm response, expected radiological and toxicological indications during normal and upset conditions, system construction and operations is required. Revise training needs analysis process to ensure that operations and all affected support personnel are included in this process.

Documents Reviewed:

- TFC-BSM-TQ_ADD-C-01, *Training Analysis, Design and Development*, Rev E-1, E-2, and E-4;
- CH2M HILL Required Reading List for TFC-BSM-TQ_ADD-C-01, Rev E-1;
- RPP-PLAN-38530, *Radiological Monitoring Plan for Tank 2741-C-110 to Tank 241-AN-106 Waste Transfer*, Rev 5
- Operations and Support Personnel Qualification Cards

Activities/Operations Observed:

Work Orders:

TFC-09-1566	242A HVAC HMI Loss of Power Alarm Troubleshooting Package
WFO-07-3186	Electrical Repair in AN Farm
TFC-09-0439	Install new Drain Seal Assemblies in AZ-101/102A Pit
WFO-05-2807	Replace Chiller AZ-CW-R-1
CLO -07-0729	Remove Jumpers from C-104 pit
WFO-07-3186	241-AN Repair Lighting and Replace Disconnects
TFC-08-1285	C-110 Install/Remove Ops Cameras at Risers 3 & 6

Briefing and field walk down of the 241-C-110 to 241-AN-106 waste retrieval system for HPTs in training for C-110 retrieval operations (course number 356431, "HPT Radiological Monitoring for Waste Transfers - Walkdown Checklist.")

Interviews:

- Central Design Authority and Standards Engineer
- C Farm Retrieval and Closure Work Control Manager
- Construction Workers
- Field Work Supervisors
- Industrial Hygiene Manager
- Industrial Hygienists
- Maintenance Crafts Persons
- Radiological Control Technicians
- Senior Supervisory Watches
- Single Shell Tanks Radiological Controls Manager
- Training Manager
- Training Specialists
- Technical Development and Deployment Manager

Results:

The issue/action statements for the JON identified the need for (a) a training needs analysis for operations and support personnel; (b) a revision to the training needs and analysis process; and (c) develop and conduct training for support personnel. Of these three specified actions only a revised training needs analysis procedure was specified as a deliverable. Since the deliverable for the specified addressed only item (b), the closure evidence file contained only that information.

TFC-BSM-TQ_ADD-C-01 was initially revised (Rev E-1) to identify the need for training needs analyses and to ensure the analysis process included subject matter experts from support organizations. The assessor verified the document revision had been issued.

It was also noted, however, that the change put into TFC-BSM-TQ_ADD-C-01 was later removed in Rev E-4 of the document. The assessor discussed this condition with the Training Manager, who stated the Root Cause Analysis directed change had been removed as part of a recent overhaul of the training analysis, design and development process. The specific step was removed because he considered the action had now been incorporated into their process, and therefore maintaining the step as written was redundant. Subsequent review of training analyses indicated the procedure remained effective.

Despite the corrective actions for items (a) and (c), above, not being designated as deliverables and therefore not in the closure evidence file, the assessor validated completion of each action.

The assessor was provided a demonstration of the Vision database, used to document training needs analyses and resultant training requirements for Tank Farms technical personnel, and

specifically for support functions that were cited in the JON. The resultant qualification cards viewed appeared to cover areas identified in the JON. The custodian of the database indicated the analyses and cards were being enhanced on an ongoing basis.

Training of Industrial Hygiene personnel was verified by Type A HE-1, and Radiological Controls personnel training was verified by RCA JON 9.5 and Type A WC-3. The assessor also discussed changes made to training requirements as a result of the S-102 event with the Training Manager, the Radiological Controls Manager, and the Central Design Authority and Standards Engineer who had been involved in the Engineering organizations training needs assessment process. They each demonstrated knowledge of changes that had been considered appropriate for their organizations due to the S-102 event and how the changes had been incorporated into organizational training processes.

Multiple assessors also observed field activities to measure personnel competencies and knowledge through discussions/interviews.

When the Executive Safety Review Board (ESRB) agreed to close this item at their meeting of November 29, 2007, they identified that support staff needed training and had not been included. They assigned an action to specifically formalize the process for Engineering to review training packages and carried it as an open ESRB action. The corrective action was implemented by the original TFC-BSM-TQ_ADD-C-01 change discussed above. The ESRB agreed to close their item at their January 24, 2008, meeting.

Conclusions: Although the closure evidence file was not considered complete to address the identified issue (see Suggestion for Continued Improvement below), effectiveness of corrective actions was able to be assessed. Corrective actions taken to conduct training needs analyses, change training requirements, and upgrade the needs analysis process were considered effective. Personnel knowledge was also considered adequate.

Rating:

Effective

Recommendation for Completion:

None

Suggestions for Continued Improvement:

S-RCA JON-13.1-1
Actions that comprehensively address the issue(s) identified in the CH2MHill Root Cause Analysis Report JON 13 should be included in the closure evidence files.

Reviewer:

Lead, Kerry Schierman, DOE-RL, Facility Representative
Jack George, DOE-RL, Facility Representative Program Manager
Joe Sondag, DOE-ORP, Facility Representative
Ron Ciola, DOE-ORP, Facility Representative

Corrective Action Evaluation Form
ER & HE PERs

JON/Finding:
ER & HE PERs – Issues with Emergency Response and Health Effects identified during various Tank Farm Contractor Assessments.

Corrective Actions Reviewed:

7-1493
Event Response and Health Effects PERs, TF-AOP-006 and TF-AOP-011 procedures lack guidance in responding to an unknown High Radiation Area.

7-1494
Event Response and Health Effects PERs, Training is required for the ERO personnel and affected organizations on Lessons Learned and resultant procedure changes.

7-1495
Event Response and Health Effects PERs, As a result of the Emergency Management S-102 Event Response Review, Emergency Management is to review the Event response with Fluor Hanford (FH) Emergency Management for site applicability/Lessons Learned and incorporate any resultant changes into subsequent Emergency Management training.

7-1496
Event Response and Health Effects PERs, Timely response was delayed while necessary re-entry plans were developed and approved. Evaluate/develop pre-planned and approved re-entry, investigative and habitability surveys for and with both IH and HPT involvement.

7-1497
Event Response and Health Effects PERs, As a result of the Emergency Management S-102 Event Response Review, the current IH support for shift manning, IH Hazard Assessor support for event response and IH knowledge of the Incident Command system should be evaluated. Determine best practices and integration with HPT response for future events.

7-1498
Event Response and Health Effects PERs, When the Event Coordination Team (ECT) "page" was initiated at the Federal Building Emergency Operations Center (EOC), the page notification did not reach the CH2M HILL Technical Support personnel as expected. There is not a current CH2M HILL process to maintain the ECT response page list current for CH2M HILL contractor representative and technical representative personnel.

7-1500
Event Response and Health Effects PERs, As a result of the Emergency Management S-102 Event Response Review a significant delay was found in sending out the initial "pager" notification for an "abnormal event" per TFC-OPS-OPER-D-01, Event Notification matrix until additional resources were available in the WFO Shift Office. Given the new "pager" system implemented, this process should be simplified to aid the Shift Manager.

7-1501

Event Response and Health Effects PERs, As result of the Emergency Management S-102 Event Response Review, it was found that during the S-102 High Radiation Area event (HRA), personnel were brought in to provide access to the Single shell tank farm surveillance cameras in an effort to observe S-102 for indications of the source of the HRA. At the time, the WFO Shift Manager did not have access.

7-1503

Event Response and Health Effects PERs, As a result of the Emergency Management S-102 Event Response Review, the focus was primarily on TF-AOP-006 and TF-AOP-011 Abnormal Response procedures. The lessons learned of this event should be reviewed against all of the TF-AOP's for any required changes. In addition, the current AOP's and their approach should be compared against best practices by other facilities and industry.

7-1525

Event Response and Health Effects PERs, In the S-102 Health Effects Investigation, there was a need to quickly identify potentially affected individuals. The management survey conducted was not timely and was initially inaccurate which required substantial rework. This survey was conducted for an event that occurred on a normal day off. This would have been further complicated if performed for a normal work day.

7-1815

Event Response and Health Effects PERs, Additional Collection of Data: Toxicologists and Medical Experts recommend collection of additional environmental and field samples to aid in the future analysis of worker health effects. Increase of the level of industrial hygiene monitoring and surveillance for post-event dose reconstruction.

Documents Reviewed:

- TF-AOP-006, *Response to High Radiation, rev c-5*
- TFC-OPS-EP-D-04, *Emergency Management Program Assessment Plan Guidance*
- TFC-ENG-DESIGN-C-36, *Hazards Assessment Consequence Calculation Process*
- FY2008-CH2M-I-0007, *Corrective Action Plan Implementation for Tank 241-S-102 Waste Spill End Point Assessment*
- FY2008-CH2M-I-0003, *S-102 Midpoint Assessment*
- DOE Order 151.1C, *Comprehensive Emergency Management System*
- DOE G 151.1-2, *Technical Planning Basis*
- Training Activity TO7043 - *IH Role in Abnormal Events*
- Training Activity TA-07041 - *Job Hazard Analysis Process*
- Training Activity TA-08041- *EM - Identification of Exposed Personnel*
- Training Activity TO801 8 - *Case Manager Coordination w/AMH*
- Training Activity TO7044 - *Tank Farm Vapor Information Sheet*
- Training Activity TO8028 - *IH Sampling for Waste Transfer/Retrieval for Potential Abnormal Events*
- Training Activity - *Dose Reconstruction IH Sampling for Waste Transfer Abnormal Events*
- Training Course 3571 03 - *Cycle 3 Industrial Health Technician Continuing Training*

- TF-AOP-003, *Response to Elevated Airborne Radioactivity, Rev.* B- 7
- TF-AOP-0 11, *Response to Chemical and/or Radiological Events, Rev. C-1*
- TF-AOP-015, *Response to Reported Odors or Unexpected Changes to Vapor Conditions, Rev. B-18*
- TF-AOP-018, *Response to Electrical, Water, Air, or Pressurized Gas Cylinders High Energy Release, Rev.* B-2
- TFC-ESHQ-S-CMLI-C-0 1, *Injury and Illness Recordkeeping, Rev. C-2*
- TFC-ESHQ-S - CMLI-C-02, *Injury and Illness Events, Rev.* B-2
- TFC-ESHQ-S CMLI-CD-03, *Workers Compensation Program, Rev. C*
- TFC-OPS-OPER-CD-01, *Event Notification, Rev. A*
- TFC-ESHQ-S IH-C-46, *IH Reporting and Records Management, Rev. B-1*
- Standing Order CO-07-009, *Industrial Hygiene Dose Reconstruction Sampling for Waste Transfer and Retrievals*
- Standing Order WFO-07-006, *Industrial Hygiene Dose Reconstruction Sampling for Waste Transfer and Retrievals*
- *Shift Office On-Call List,* RPP-IP-0732, release 135

Activities/Operations Observed:

- April 7, 2009 AP Tank Farm High Efficiency Particulate (HEPA) Filter Failure Drill
- April 7, 2009 Radiological Waste Container Handling Accident Drill
- April 16, 2009 Emergency Preparedness C-110 Tabletop Drill

Interviews:

- IH Technician (2)
- Electrician (3)
- Nuclear Chemical Operator (2)
- Manager, IH Programs
- Manager, Training
- Manager, Security & Emergency Services/Events Investigation
- Manager, Shift Operations
- Manager, Senior Shift
- Coordinator, Emergency Preparedness
- DOE Facility Representative, ORP
- HAMTEC Safety Representative

Results:

The effectiveness review for ER & HE PERS included reviewing the eleven corrective actions (CA), select aspects of their closure documentation, how the CAs were implemented, and if the corrective actions will be effective in preventing recurrence of the deficiencies identified in these PERs.

TF-AOP-006 and TF-AOP-011 procedures were modified to provide more guidance in responding to an unknown High Radiation Area. All other TF-AOP's were reviewed and updated to reflect lessons learned of this event. The ERO personnel and affected organizations (in-house and Site-wide) were trained on Lessons Learned and the resulting procedure changes. There were significant issues pager notification and personnel call in processes for this event. There was an overall effort to improve IH and HPT response to tank waste spills. This included pre-planned and approved re-entry investigative and habitability surveys, IH support for shift manning, IH Hazard Assessor support for event response, and IH knowledge of the Incident Command system. Some potentially affected individuals were not quickly identified and there was need for additional environmental and field samples to aid in the future analysis of worker health effects. Both the updated and current procedures were reviewed. The procedure changes, training rosters, and class materials were reviewed. Also the results of the drills and personnel interviews verified the changes and training was effective.

Conclusions:

The document review and interviews have shown that the corrective actions tasks associated with the TF contractor, AdvanceMed Hanford (AMH) and the Fluor Hanford (FH) Emergency Preparedness organizations supporting this Finding were complete, effective and sustainable.

Rating:

Effective

Recommendation for Completion:

None

Suggestions for Continued Improvement:

None

Reviewer:

Jack George, DOE-RL, Facility Representative, Program Manager
Courtney Blanchard, DOE-ORP, Facility Representative

Corrective Action Evaluation Form
DOE ORP SA: ALL

JON/Finding: DOE ORP Self Assessment - All

Corrective Actions Reviewed:

DOE SA-1
Conduct an HPI investigation into the ORP response to the S-102 event.

DOE SA-2
Provide a detailed briefing to all Tank Farm FRs on expectations and requirements for contractor event evaluation and reporting, including: management's direction to designate senior staff as the acting TOD Director in the absence of the TOD Director, EM notification requirements and expectations for notification to ORP senior management, maintaining knowledge of work activities planned on backshift and weekends, ensure sufficient information is provided by the contractor during event notifications, and clarify expectations for event follow-up.

DOE SA-3
TOD Director will assign senior, experienced TOD staff as Acting Director of TOD in the absence of the TOD Director (once the HPI review is completed, a formal corrective action will be defined and implemented as determined necessary by the HPI review).

DOE SA-4
Develop corrective action plan for the HPI review once the review is completed.

DOE SA-5
Obtain contractor engineering resources to support the TED so that mission critical SSCs can be included in the review and oversight process.

DOE SA-6
Conduct a joint, DOE/contractor evaluation of the TFC's engineering organization, process, and procedures, including subcontractors, and include a review of the design/design review process for mission critical SSCs as well as safety-related SSCs.

DOE SA-7
In coordination with the TFC, develop a clear, concise definition of "physically connected" in the DSA for the tanks farms, and approve the contractor-submitted safety basis amendment.

DOE SA-8
Revise the FRIs to provide detailed guidance and direction to on-call FRs for evaluating event notifications, including: management's direction to designate senior staff as the acting TOD Director in the absence of the TOD Director, EM notification requirements and expectations for notification to ORP senior management, maintaining knowledge of work activities planned on backshift and weekends, ensure sufficient information is provided by the contractor during event notifications, abnormal event criteria, conservative decision making, and clarify expectations for event follow-up.

DOE SA-9
Revise the Tank Farm FR qualification cards to require an oral interview with the TOD Director on management expectations for the on-call FR, including FRI-specific requirements and guidance.

DOE SA-10
Develop an interim resource point of contact list to summarize (and make available to the person acting) contact information for event response resources and notification requirements.

DOE SA-11
Develop a desk instruction or other formal means to summarize (and make available to the person acting) contact information for event response resources and notification requirements, including management expectations for conservative decision-making, event action levels (or notification thresholds), and notifications to outside agencies (including DOE-HQ, Washington State Departments of Health and Ecology, etc.)

Documents Reviewed:

- 7-TF-018, Office of River Protection Investigation of ORP Actions related to the Tank S-102 Waste Spill (Pfaff Report)
- Human Performance Improvement Review of the DOE Response to Tank S-102 Tank Waste Spill
- U.S. Department of Energy (DOE), Office of River Protection (ORP) Corrective Action Plan (CAP) in Response to Self-Assessments of DOE Response to the S-102 Tank Waste Spill on July 27,2007
- Assessment of ORP TF Oversight, (Gibbs Report)
- HNF-SD-WM-TSR-006, Rev. 6-A, Definitions
- ORP M 151.1, Revision 0, DOE ORP Event Notification Procedure
- Weekly ORP Weekend Senior Management Availability List, 4/18/2009
- Engineering Design Program Review, September 2007
- FRI-006, Revision 6, ORP Facility Representative Instruction Facility Representative Responsibilities and Routine Activities
- ORP Facility Representative Functional Area Qualification Record and Facility Specific Qualification Standard and Record, Revision 6
- ORP FY2008 Assessment Schedule

Activities/Operations Observed:

None

Interviews:

- WRPS - Chief Engineer
- DOE-ORP - Tank Farm Operations, Director
- DOE-ORP - ESQ, Assistant Manager
- DOE-ORP, Facility Representatives (2)

Results:

The HPI investigation from SA-1 was reviewed and found to adequately assess organizational weaknesses at ORP that contributed to the event. A corrective action plan was developed per SA-4 and considered effectively executed.

Interviews with ORP Facility Representatives indicated that the contents of the detailed briefing regarding the expected actions for event notification as stated in SA-2 were clear and provided the necessary detail to respond to future events.

SA-3 established an expectation that the TOD director would delegate authority to only senior, experienced TOD staff as the acting director.

The Chief Engineer for WPRS was interviewed regarding contractor engineering staffing as stated in SA-5. At the time of the S-102 event, CH2MHILL had 113 of 126 positions filled. When questioned about the adequacy of current staffing, he stated that their most critical shortage had been the lack of any HVAC engineering staff due to a retirement. WPRS has hired a new HVAC engineer, and has also hired four "rotational engineers" who are hired as entry-level engineers that rotate through the various engineering groups in order to develop them for positions of higher responsibility. He stated that WRPS would also be hiring eight additional engineers as part of the Recovery Act surge. These are intended to be more experienced than the "rotational engineers," but will also rotate as they finish projects rather than according to a fixed time schedule.

The joint evaluation of the TFC engineering organization documented in Engineering Design Program Review, September 2007, called for in SA-6 was reviewed and determined to accurately assess the health of the organization. Meaningful recommendations were made and current conditions indicate that WRPS is continuing to pursue acquiring the needed staff to support operations.

SA-7 called for a revised definition of "physically connected" in the tank farm safety basis document. The TSR document was reviewed and found to contain adequate language to clarify the term.

FRI-006, Revision 6, ORP Facility Representative Instruction Facility Representative Responsibilities and Routine Activities was reviewed and found to contain adequate direction in regard to event response and notification as identified in SA-8. The FR qualification card revision was also reviewed and found to contain supporting oral interviews to reinforce that expectation as specified in SA-9.

Weekly Management Availability e-mails have been implemented which are distributed to key personnel and provide contact information should an event occur as stated in SA-10.

ORP M 151.1, Revision 0, DOE ORP Event Notification Procedure was written to provide the means to convey duties and responsibilities for DOE personnel for event response such that personnel acting on behalf of others are aware of the expectations as stated in SA-11.

Conclusions:

Actions taken in regard to the DOE ORP self-assessment have been effective.

Rating:

Effective

Recommendation for Completion:

None

Suggestions for Continued Improvement:

None

Reviewer:

Roger Claycomb, DOE-ID, Nuclear Safety and Performance Division

Corrective Action Evaluation Form
EM-62 OP.1 F-1

JON/Finding:
EM-62 OP.1 F-1, The Tank Farm Contractor Conduct of Operations Safety Management Program Owner does not assess implementation of all DOE Order 5480.19 Attachment 1 Chapters.

Corrective Actions Reviewed:

OP.1 F-1 CA.1
Conduct a Management Observation Program (MOP) assessment of the implementation of the assessment requirements outlined in TFC-PLN-32 and provide results to the SMP owners.

OP.1 F-1 CA.2
Conduct interviews with SMP owners to confirm that program health assessment frequency requirements of TFC-PLN-32 are effectively understood.

OP.1 F-1 CA.2(a)(1)
Complete a review of the Conduct of Operations Program to assess compliance with DOE Order 5480.19 and TFC-PLN-32.

OP.1 F-1 CA.2(a)(2)
Add a Management Assessment to the FY09 Assessment Schedule to perform a Conduct of Operations Management Assessment to include Chapters 2, 5, 13, 14, and 16 of DOE Order 5480.19 listed in the Conduct of Operations matrix.

OP.1 F-1 CA.2(b, c)
Perform a management observation (MOP) of the SMP assessment schedules and completion rates.

OP.1 F-1 CA.2(c. d)
Revise FTC-PLN-32 to require a periodic assessment of the SMP process, including owner knowledge and completion of required assessments.

OP.1 F-1 CA.2(d)
Provide training to Safety Management Program (SMP) owners on their roles and responsibilities as discussed in TFC-PLN-32.

Documents Reviewed:

- MOP-08-08-03, *Corrective Action (PER-2008-0989, E-STARS Task CH2M-PER-2008-0989.2)*
- Interoffice Memorandum 7J000-08-RLH-010, dated June 20, 2008, *Safety Management Program Assessments*

- FY2008-CH2M-I-0002, Independent Assessment of Waste Feed Operations: Waste Transfer Operations Management Systems, dated December 10, 2007 – January 31, 2008
- TFC-PLN-05, *Conduct of Operations Implementation Plan*, Rev C-5
- TFC-PLN-10, *Assessment Program Plan*, Rev E
- TFC-PLN-32, *Tank Operations Contractor Safety Management Programs*, Rev B-20
- TFC-PLN-100, *Tank Operations Contractor Requirements Basis Document*, Rev A
- TFC-ESHQ-AP-C-01, *Management Assessment*, Rev E-6
- August 2008, Conduct of Operations Safety Management Program presentation to the Executive Safety Review Board
- FY2009 WRPS Integrated Assessment Schedule, Rev 4, dated February 25, 2009
- FY2009 WRPS Integrated Assessment Schedule, Rev 6, dated April 14, 2009
- Safety Management Program briefing materials from December 9, 2008 and associated course completion rosters
- Conduct of Operations Management Assessment FY2008-OPS-M-0120

Activities/Operations Observed:

- Conduct of Operations Sensitivity Training provided by C Farm Retrieval and Closure Manager
- Conduct of Operations Council Meeting

Interviews:

- Base Operations, Operations Manager
- Industrial Hygiene Manager
- Procedures Manager
- Quality Assurance Engineer
- Shift Operations Manager
- Training Manager

Results:

A Management Observation Program (MOP) assessment of the implementation of the assessment requirements in TFC-PLN-32, including assessment schedules and completion rates, was conducted, and results reviewed with Safety Management Program (SMP) managers. A MOP assessment of SMP manager knowledge of type, purpose, and frequency of TFC-PLN-32 SMP assessments was also conducted. Additionally, training was provided to the SMP managers in December 2008, on their roles and responsibilities as defined in TFC-PLN-32. The assessor validated SMP manager knowledge through the interview process. Finally, a revision to TFC-PLN-32 to periodically assess SMP manager knowledge and completion of assessments required by the plan through a MOP activity was also verified to have been completed.

A Conduct of Operations assessment was conducted in August 2008, with the results being presented to the Executive Safety Review Board. Overall program health was graded as "good," eleven chapters were also evaluated as "good," five chapters as "marginal," one chapter

(Equipment and Piping Labeling) as "poor," and one chapter as "not applicable." Trends from a previous assessment were also provided.

Management assessments were added to the FY2009 WRPS Integrated Assessment Schedule for DOE 5480.19, Attachment I Chapters II and V for June 2009, and Chapters XIII, XIV, and XVI for August 2009. Discussions with the Shift Operations Manager indicated all of the previously identified chapters, including Chapter IX were currently being assessed. He further intends to assess all remaining chapters of Attachment I in May to support certification for Phase II of Integrated Safety Management. At that point, an evaluation will be made to redistribute future assessments to be consistent with both TFC-PLN-05 and TFC-PLN-32 periodicity requirements.

Conclusions:

The evidence files appeared complete and auditable. The corrective actions put in place appear to have been effective in correcting deficient conditions identified, and processes have been put in place to periodically review effectiveness on an ongoing basis. In addition, activities currently in progress to verify readiness for Integrated Safety Management Phase II declaration have accelerated some of the assessment activities. Because both programs (Conduct of Operations and Safety Management Programs) are assessed biennially, and in some cases triennially, sustained effectiveness must be evaluated over some time.

Rating:

Effective

Recommendation for Completion:

None

Suggestions for Continued Improvement:

None

Reviewer:

Kerry Schierman, DOE-RL, Facility Representative

Corrective Action Evaluation Form
EM-62 CA.1 F-2

JON/Finding:
ORP verification of contractor corrective actions for the S-102 CAP has not been adequately performed.

All corrective actions were reviewed

Documents Reviewed:

- Type A Accident Investigation Report, The July 27, 2007 Tank 241-S-102 Waste Spill at the Hanford Tank Farms
- Corrective Action Plan for Type A Accident Investigation Report
- FY2008-CH2M-1-0003, CH2M HILL Hanford Group, Inc. Independent Assessment of Corrective Action Plan Implementation for Tank 241-S-102 Waste Spill Investigation and Analysis Reports Midpoint Assessment
- FY2008-CH2M-I-0007, Corrective Action Plan Implementation for Tank 241-S-102 Waste Spill End Point Assessment
- Human Performance Improvement Review of the DOE Response to Tank S-102 Tank Waste Spill
- Assessment of ORP TF Oversight, (Gibbs Report)
- Letter of Direction to CH2M Hill and AMTF
- Integrated Assessment Program, ESQ-OA-IP-01 R1

Activities/Operations Observed:

None

Interviews:

- DOE- ORP Quality Assurance
- DOE-ORP Tank Farms Facility Representative
- WRPS Quality Assurance Manager Engineer (support services contractor)
- Director, Tank Farm Operations Division, DOE-ORP

Results:

The S-102 Corrective Action Plan (CAP) verification plan was revised based on recommendations from EM-62 as well as ORP internal comments. Additional expectations were incorporated for planning of verification and closure activities.

Corrective action # CA-2 stated, "Brief affected DOE personnel on the revised S-102 CAP Verification Plan to ensure requirements and expectations are clearly understood." Closure of this action was completed based on reviews by ORP and support staff. However, the attendance

roster or materials for these briefings cannot be located. Based on interviews and independent reviews of the roster and briefing materials all indications point to an acceptable closure.

S-102 verified closure packages were reviewed by ORP management and placed into the IDMS. This shows review of verification packages is complete and shows proper execution.

The S-102 effectiveness verification assessment (of which this form and subsequent report is a part) will close this particular action prior to resumption of retrieval operations at C-109.

Integrated Assessment Program, ESQ-OA-IP-01 R1 issued 1/21/2009 was revised to limit corrective action verification closure to federal staff (DOE support contractors may assist with verification, but federal staff must review and accept closure). 6.2.9 assigns closure verification responsibility to federal SMEs or the assessment team leader. This revision to the assessment instruction adequately addresses this issue.

Conclusions:

Review of the S-102 CAP and subsequent changes to that CAP and the associated documentation, shows comprehensive verification activities performed by ORP management and staff. These additional verification activities adequately address the issues raised by EM-62 in their review of ORP verification activities.

Rating:

Effective

Recommendation for Completion:

None

Suggestions for Continued Improvement:

None

Reviewer:

Greg Hayward, DOE-ID, Nuclear Safety and Performance Division

Corrective Action Evaluation Form
EM-62 OP.1 F-2

JON/Finding:

EM-62 OP.1 F-2, Shift Managers demonstrated less than adequate familiarity with Technical Safety Requirements (TSR) modes of operations and how to implement TSR Required Actions.

Corrective Actions Reviewed:

CA.1
Perform evaluation and changes to TSR-006, Section 1.6, to update or remove the SST MODES to address related issues identified in this PER.

CA.2
Complete updates of necessary implementing procedures to related to the NS&L changes to TSR-006, Section 1.6, in action #1 of this PER to support management expectations on effective documentation of MODE changes.

CA.3
Complete briefing to all OE/SM qualified personnel on issues in this PER as well as management expectations on demonstrating TSR compliance.

CA.4
Complete management observation to confirm continued effective understanding of management expectations from action #3 as well as effective knowledge related to actions #1 and #2

CA.5
Revise the ORP Integrated Assessment Schedule for the ORP Tank Farm Facility Representatives to evaluate contractor Nuclear Chemical Operator, Operation Engineer, and Shift Manager safety basis level of knowledge on a quarterly basis when conducting TSR Implementation surveillances.

(a.1)1 Complete Management Expectations Training on Demonstrating TSR Compliance (CH2M-PER-2008-0960 & CH2M-PER-2008-0992).

(a.1)2 Complete Documented Safety Analysis (DSA) and TSRs Overview Training Briefings for designated operations and engineering personnel.

(a.1,2) WRPS issued Management Control Plan for Tank Farms Operational Turnover (29633-PM-PLN-0001) on 9/11/08 to define roles and responsibilities at transition to ensure safe and effective operation of the Hanford Tank Farms under the Tank Operations Contract. Per the MCP, mentoring and feedback is provided (Base Operations and SST Retrieval/Closure) on management expectations through the use of the Hazard Review Board (HRB) and Senior Supervisory Watch (SSW). HRB and SSW programs have identified areas for improvement.

(c) Schedule performance-based assessments of the Shift Manager TSR knowledge and ability to use them.

(a,2)(c)Conduct a performance-based evaluation of the effectiveness of TSR knowledge and compliance elements of the Shift Manager initial qualification, re-qualification, and continuing training programs.

(b) Verify that all (100%) OE/SM qualified personnel have been briefed on issues in CH2M-PER-2008-0960, as well as management expectations on demonstrating TSR compliance.

Documents Reviewed:

- HNF-SD-WM-TSR-006; Tank Farm Technical Safety Requirements
- RPP-13033; Tank Farm Documented Safety Analysis
- CH2M-PER-2008-0992
- CH2M-PER-2008-0960
- CH2M-PER-2008-0992 Corrective Actions and Deliverables
- CH2M-PER-2008-0960 Corrective Actions and Deliverables
- Presentation Materials Documenting Safety Basis Amendment 051
- TFC-OPS-OPER-C-01; Technical Safety Requirement Compliance
- Operational Awareness Database Item 4853, Interview of Shift Manager, 11/26/08
- Course Number 350929; Self-Study Guide for TFC Technical Safety Requirements
- Shift Manager Operational Logbook
- Tank Farm Abnormal Operating Procedure 3; Response to Elevated Airborne Radioactivity
- Tank Farm Abnormal Operating Procedure 21; Response to Tank Farm Ventilation Upset

Activities/Operations Observed:

- Observed Shift Manager Perform Duties

Interviews:

- Operations Shift Manager
- Operations Organization Manager
- Shift Managers
- Training Specialists
- Tank Operations Division Director

Results:

The issue of retention of knowledge of Safety Basis requirements was addressed via initial training conducted after the S-102 event. The training's effectiveness was periodically checked by Facility Representatives in the Tank Operations Division with varying results.

The assessors reviewed Operational Awareness Database entries and interviewed individuals to determine the effectiveness of the safety basis training. Emergency Response Evaluation reports were reviewed, but showed that the emergencies scenarios were selected to follow the Abnormal Operating Procedures and Emergency Response Procedures vice the TSRs. For instance, the scenario that evaluated the response to an elevated flammable gas level in a waste tank provided that the level was at 18 percent LFL, below the 25 percent required to ender the Limiting Condition for Operation.

An interview with the Tank Operations Division Director gleaned that Facility Representatives were performing knowledge checks on the Shift Managers on a periodic basis. The assessor's review of Facility Representative interviews have shown few isolated weaknesses were detected during these interviews. The Facility Representative reviews covered various TSR subjects, including administrative locks and administrative controls. An excerpt from a typical Facility Representative entry is as follows:

> "The FR interviewed a SM regarding his knowledge of the Nuclear Safety Basis. We discussed various aspects of waste transfers. We discussed various safety basis requirements for waste transfers and where/how they apply. Specifically, we discussed leak detectors and their surveillance requirements, requirements and basis for material balances, what is a MBD, and what to do if it is exceeded. We also discussed requirement for pit covers, double valve isolation, back flow preventers, and DST ventilation including surveillance requirements. He was knowledgeable of all these topics. He was also knowledgeable of the difference between General Service, Safety Significant, and Safety Class, and knew that we have no Safety Class SSCs in tank farms. He was also knowledgeable of the current commercial grade dedication issue with MCS and its associated red arrow entry. I was pleased with this SM's knowledge of the Safety Basis. No deficiencies were identified. This surveillance satisfies this month's EM-62 surveillance requirement for evaluating a SM for Safety Basis knowledge."

The assessor identified that Tank Farm Contractor TSRs training had been developed and provided to Shift Mangers. Twenty-nine of the thirty-four individuals slated for the course have attended this training, which consisted of a four-hour training session followed by a written exercise/assignment to be completed at the conclusion of the training session. At the culmination of the training and completion of the assignment, each Shift Manager is to sit through an oral board with the Operations Shift Manager and Operations Organization Manager. Once the Shift Managers are trained and pass their boards, the plan is to include the Operating Engineers on the next round of training and examination. The assessor noted that there is no plan for continued training to promote retention of knowledge.

The assessor conducted interviews to determine retention of knowledge from the TSR training materials. The knowledge check indicated an adequate level of knowledge from the Operations Shift Manager and the Operations Organization Shift Manager. The Shift Manager interview discussed several TSR issues directly related to the S-102 event, such as, changes to HNF-SD-WM-TSR-006; *Tank Farm Technical Safety Requirements and* RPP-13033; *Tank Farm Documented Safety Analysis,* concepts of physical connection and disconnection, modes of operation, evaluation of ancillary equipment that could cause leaks during a waste transfer, miscellaneous equipment at tank farms prohibited from operation, accident scenarios, entering Abnormal Operating Procedures and several work control and hazard analysis. The Shift Manager displayed a weak understanding of where to locate information in the Documented Safety Analysis, and tended to rely on operational procedures to screen Tank Farm activities, some of which were clearly unauthorized by the TSRs. Overall the level of knowledge of the Shift Manager was adequate, and given the use of the TSRs, he was able to satisfactorily answer most questions. Of note, the individual had recently attended the Tank Farm Contractor Technical Safety Requirement training that was being administered to the Shift Manager crews.

Conclusions:

Training efforts since the S-102 event have been ongoing. The level of knowledge of the Shift Managers is adequate. Due to the technical nature of the material, and to promote retention, the training should be continued at a certain periodicity as determined by knowledge checks.

Rating:

Effective

Recommendation for Completion:

None

Suggestions for Continued Improvement:

S-EM-62 OP.1 F-2-1
The Tank Operations Contractor should incorporate continuing training on Technical Safety Requirements for Shift Managers; training should include the basis for each TSR, and information from the DSA including relevant accident scenarios and unmitigated consequences.

Reviewer:

Ron Ciola, DOE-ORP, Facility Representative

Corrective Action Evaluation Form
EM-62 OP.1 F-4

JON/Finding:
EM-62 OP.1 F-4, TFC-OPS-OPER-C-13, *Technical Procedure Control and Use*, allows for procedure writers to incorporate changes resulting from field validation without subsequent USQ evaluation.

Corrective Actions Reviewed:

CA.1
Revise procedure TFC-OPS-OPER-C-13 to delete paragraph 4.4.24, which allows for procedure changes when a procedure has already been processed during the construction or modification of a system that has not been field validated (and issued a LL Bulletin).

Documents Reviewed:

- Just In Time, RPP Lessons Learned No. 07-042, *Approval of USQ Evaluations Must Reflect Final Documentation*
- TFC-OPS-OPER-C-13, *Technical Procedure Control and Use*
- CH2M-PER-2008-0995 and Barrier Analysis
- FY2008-CH2M-1-0003, *CH2M HILL Hanford Group, Inc., Independent Assessment of Corrective Action Plan Implementation for Tank 241-S-102 Waste Spill Investigation and Analysis Reports – Midpoint Assessment*
- CH2M-PER-2008-0703
- Administrative Document Change Authorization for TFC-OPS-OPER-C-13/F8, *Technical Procedure Control and Use*
- *Engineering Required Reading (RR-07-041/2838)- Assigned to the USQ Evaluators*

Activities/Operations Observed:

None

Interviews:

WRPS Lessons Learned Coordinator

Results:

Problem Evaluation Request CH2M-PER-2008-0995 initiated a corrective action to remove Paragraph 4.4.26 [4.4.24 is a typo] from procedure TFC-OPS-OPER-C-13, *Technical Procedure Control and Use*, to address Finding OP.1 F-4. However, the corrective action to remove paragraph 4.4.26 was first initiated by CH2M-PER-2008-0703, due to CH2M Hill's FY2008-CH2M-1-0003 Independent Assessment finding MPA-04. The proposed procedure change was documented in the Administrative Document Change Authorization for TFC-OPS-OPER-C-13/F8, *Technical Procedure Control and Use* and CH2M-PER-2008-0703 (but not CH2M-PER-

2008-0995). Neither PER identified the other for the same corrective action. Nonetheless, the procedure was appropriately revised and contains adequate requirements for ensuring that an Unreviewed Safety Question evaluation is completed for procedure changes.

The Just In Time Lessons Learned, No. 07-042, *Approval of USQ Evaluations Must Reflect Final Documentation*, contained useful information, but it is questionable to take credit for it as a corrective action since it was issued prior to Finding OP.1 F-4. Engineering personnel reviewed the Lessons Learned as required reading.

Conclusions:

The evidence files did not provide a clear record for how procedure TFC-OPS-OPER-C-13 was revised. A review of the IDMS procedure history files was required to determine how the procedure was revised. The Lessons Learned provided useful information; but was not issued in response to the finding. Despite these issues, the corrective action for removing paragraph 4.4.26 was effective.

Rating:

Effective

Recommendation for Completion:

None

Suggestions for Continued Improvement:

None

Reviewer:

Joe Sondag, DOE-ORP Facility Representative

Corrective Action Evaluation Form
EM-62 OP.1 SO-1

JON/Finding:
EM-62 OP.1 SO-1, The Work Release Meeting is not effective at scheduling or communicating the status of work.

Corrective Actions Reviewed:

(a) 1
WRPS issued Management Control Plan for Tank Farms Operational Turnover (29633-PM-PLN-0001) on 9/11/08 to define roles and responsibilities at transition and addresses all operations issues identified during due diligence reviews.

(a) 2
TFC-OPS-MAINT-C-01, Tank Operations Contractor Work Control, Section 4.11.1, defines the process for developing a Daily Release Sheet/Status. The status of planned/on-going work is communicated regularly via the Base Operations conference call, operations turnover, and Plan of the Day meetings. Review of HRB documentation and SSW MOPs indicate this as an effective method of scheduling and communicating.

Documents Reviewed:

- Hanford Site River Protection (CH2M HILL Hanford Group, Inc.) EM-62 Assessment Report, March 2008
- PER 08-0341.7
- PER 08-0997
- PER 08 0341.7 Corrective Actions and Deliverables
- PER 08-0997 Corrective Actions and Deliverables
- Shift Manager Operational Logbook
- Tank Farm Abnormal Operating Procedure 3; Response to Elevated Airborne Radioactivity
- Tank Farm Abnormal Operating Procedure 21; Response to Tank Farm Ventilation Upset

Activities/Operations Observed:

- Contractor Plan of the Day Meetings
- Contractor Plan of the Day Meetings
- Contractor Morning Status Meetings
- Contractor Daily Release Sheet Meetings
- TFC-09-0439; Install new Drain Seal Assemblies in AZ-101/102A Pit
- WFO-WO-05-002807; Replace Chiller AZ-CW-R-1
- TFC-09-1566-242A HVAC; HMI Loss of Power Alarm Troubleshooting Package
- WFO-07-3186; 241-AN; Repair Lighting and Replace Disconnects

- TFC-09-1519; 242-A, Dynamic Test Raw Water Pressure Control Valves
- Table Top Drill of Retrieval Operations Emergency Procedures

Interviews:

- Operations Shift Manager
- Operations Organization Manager
- Shift Managers
- Training Specialists
- Tank Operations Division Director

Results:

As documented by the EM-62 review report (Hanford Site River Protection (CH2M HILL Hanford Group, Inc.) EM-62 Assessment Report, March 2008), the EM-62 assessment team members attended work release meetings on three days to evaluate the work release process and identify which activities to observe that day. On five occasions, EM-62 team members attempted to observe work that was discussed during the meeting only to find that the work was not going to be performed for a variety of reasons. It was not clear to the EM-62 assessment team members why work would be listed and discussed at the meeting if it was not going to be worked as scheduled. The EM-62 assessment team determined that this was a poor practice and brought into question the effectiveness of the tank farm contractor's work planning and status processes.

Since the EM-62's finding, the Tank Farms Operations Contractor has somewhat revised it's approach to work planning and work status. In addition to the Daily Release Sheet meetings and Plan of the Day meetings held at both Tank Farms Double Shell Tanks and Closure Operations areas, there is now a Morning Status Meeting held in each of these respective areas. The schedule of the work planning, release and status meetings is as follows: At 6:45 the Daily Release Sheet Meetings are held. These meetings Review the Daily Report and the Daily Release Sheet. The First Line Supervisors discuss the Daily Release Sheet work items, and resources are confirmed to be committed to the work. A time and place for a prejob brief is scheduled if not already on the release sheet. The Planning and Engineering organizations are also there to support the work discussions.

The second round of meetings each morning is held immediately after the Daily Release Sheet Meeting. The 7:15 morning status meetings allow the Facility Managers to provide status on their facility activities. This meeting usually lasts until 7:45 or 8 AM. Finally, there are Plan of the Day meetings held at 2:30 PM each day to communicate the status of work from the first line supervisors to the schedulers, who are preparing the next day's release sheet.

During the current assessment, the team members attended these daily meetings. Although good information was put out at the meetings, similar problems to those cited by EM-62 continue (in that work execution problems exist). That is, a large portion of work slated for completion during the morning's Daily Work Release meeting did not occur that day. Examples include work performed in the AZ farm to replace the drain plugs in pits. Although TFC-09-0439,

Install new Drain Seal Assemblies in AZ-101/102A Pit, work was briefed and started on time, incorrect plug sizes prevented the plugs from being installed. The Field Work Supervisor appropriately stopped the job since the procedure did not allow them to back out once the problem was detected.

An electrical job in the AN farm, WFO-07-3186, *241-AN, Repair Lighting and Replace Disconnects,* was also cancelled because worker qualifications did not support the work as equipment operator qualifications were not found on file.

The test of raw water control valves, TFC-09-1519, *242-A, Dynamic Test Raw Water Pressure Control Valves*, was cancelled because the work document needed a change. The job was expected to work within an hour (9 AM). It ended up working about 12 hours later.

The assessors also observed work where the job had to be stopped due to an inadequate Troubleshooting Plan. TFC-09-1566, *242A HVAC HMI Loss of Power Alarm Troubleshooting Package*, could not proceed past the first step. It appeared an adequate walk down had not been performed before the Troubleshooting Plan was prepared. As a result, the plan was not consistent with the equipment alignment in the field.

Note that the assessors also observed a job where the Troubleshooting Plan was workable, and was prepared in accordance with the requirements. It should be noted that the work replacing the AZ chiller unit, WFO-WO-05-002807; Replace Chiller AZ-CW-R-1 successfully proceeded within the bounds of the work control envelope, using first a Troubleshooting Plan and then a minor standing work document for Instrumentation Troubleshooting and Repair. This work was accomplished with minor delay.

After several failed attempts to observe work via the Daily Release Sheet meeting information, one assessment team member noted that the most successful way he was able to observe work in the field was to report to a shop area, where the workers would eventually lead them to a job being worked.

Conclusions:

Although the coordination of work has since been evaluated in the corrective actions for this finding, and status meetings have been incorporated into the daily routine -- the assessment team encountered similar problems as identified by the March, 2008 EM-62 report. EM-62 identified problems with work status which prevented work execution following the Daily Release Sheet Meeting. While one failed work item was in-line with EM-62's original observation, others problems the assessment team observed were associated with work execution and completion after a work crew entered the field, or due to improperly trained crew members. The work status was improved, but the execution remains lacking for a variety of reasons.

Rating:

Effective

Recommendation for Completion:

None

Suggestions for Continued Improvement:

S-EM-62 OP.1 SO-1-1
The TOC should reevaluate the process of planning, scheduling and releasing daily work items; the process should have checks in place to assure the packages are workable, resources are available, and the workers are trained.

Reviewer:

Lead, Ron Ciola, DOE-ORP, Facility Representative
Kerry Schierman, DOE-RL, Facility Representative
Joe Sondag, DOE-ORP, Facility Representative
Jack George, DOE-RL, Facility Representative Program Manager

washington river protection solutions
PO Box 850
Richland, WA 99352

June 10, 2009

WRPS-0901065 R1

Ms. S. L. Charboneau, Assistant Manager
Tank Farms Project
U.S. Department of Energy
Office of River Protection
Post Office Box 450
Richland, Washington 99352-0450

Dear Ms. Charboneau:

CONTRACT NO. DE-AC27-08RV14800 – WASHINGTON RIVER PROTECTION SOLUTIONS LLC RESPONSE TO THE U. S. DEPARTMENT OF ENERGY, OFFICE OF RIVER PROTECTION FINAL REPORT ON THE EFFECTIVENESS OF CORRECTIVE ACTIONS FOR THE TYPE A ACCIDENT INVESTIGATION OF THE HANFORD S-102 TANK WASTE SPILL

Reference: Letter, S. L. Charboneau, ORP, to J. M. Armstead, WRPS, "Contract No. DE-AC27-08RV14800 – U. S. Department of Energy, Office of River Protection (ORP) Final Report on the Effectiveness of Corrective Actions for the Type A Accident Investigation of the Hanford S-102 Tank Waste Spill," 09-TOD-030/0901065, dated May 15, 2009.

On May 13, 2009, the U. S. Department of Energy (DOE), Office of River Protection (ORP) transmitted the results of the final assessment report of the Effectiveness of Corrective Actions for the Type A Accident Investigation of the Hanford S-102 Tank Waste Spill (Reference).

The effectiveness assessment concluded that the corrective actions resulting from the Type A accident investigation were complete, and the assessment final report was approved by the ORP Manager on May 7, 2009. The assessment identified 26 opportunities for improvement. The ORP requested a formal response to address 14 of the 26 suggestions for continued improvement to include: 1) the plan (including specific actions planned) for implementing suggestions, 2) the dates when the specific actions will be completed and verified, and 3) the Problem Evaluation Request (PER) tracking number for each suggestion. As requested, the enclosed Corrective Action Plan addresses the identified 14 of the 26 suggestions for continued improvement.

The results of the review and corrective actions outlined in the enclosed CAP were discussed with Mr. R. J. Ciola of your staff.

Should you have any questions regarding the information provided, you may contact me at 372-9138, or your staff may contact Mr. R. E. Gregory on 373-5748.

Sincerely,

(Signature Attached)

William J. Johnson
President and Project Manager

BLM:POH

Enclosure: Corrective Action Plan - Assessment of the Effectiveness of Corrective Actions for the Type A Accident Investigation of the Hanford S-102 Tank Waste Spill (15 pages)

cc: ORP Correspondence Control
S. E Bechtol, ORP
R. J. Ciola, ORP
B. A. Harkins, ORP
S. C. Johnson, ORP
J. C. Poniatowski, ORP
H. N. Taylor, ORP

WRPS Correspondence Control
J. C. Allen-Floyd, WRPS
J. M. Armstead, WRPS
M. N. Brosee, WRPS
G. J. Johnson, WRPS
E. M. LaRock, WRPS
B. L. Mata, WRPS
N. J. Milliken, WRPS
S. M. Sax, WRPS
B. R. Thomas, WRPS

Electronically Approved by:

UserName: Johnson, William (h0094870)
Title: President and Project Manager
Date: Wednesday, 10 June 2009, 03:25 PM Pacific Daylight Time
Meaning: Sign as William J. Johnson

==========

CORRECTIVE ACTION PLAN

Assessment of the Effectiveness of Corrective Actions for the Type A Accident Investigation of the Hanford S-102 Tank Waste Spill

U. S. Department of Energy, Office of River Protection

Assessment Report

May 13, 2009

Prepared by:

Washington River Protection Solutions LLC
June 11, 2009

Table of Contents

1.0 Introduction 3
2.0 Corrective Action Methodology 4
3.0 Corrective Action Plan Structure 5
4.0 Review and Approval of WRPS Corrective Action Plan 5
5.0 Corrective Action Plan Reporting and Closure 5
6.0 Corrective Action Plan 5
6.1 S-HE-1-1 5
6.2 S-MS-1-3 6
6.3 S-WC-3-1 7
6.4 S-WC-3-3 8
6.5 S-WC-3-4 10
6.6 S-WC-4-1 10
6.7 S-WC-3-2, S-WC-4-2, and S-WC-4-3 11
6.8 S-WC-4-4 12
6.9 S-WC-4-7 13
6.10 S-EM-60 10.1-1 13
6.11 S-RCA-JON-8-1 14
6.12 S-EM-62 OP.1 F-2-1 15

1.0 Introduction

The U. S. Department of Energy (DOE) Office of Health, Safety and Security (HSS), conducted a Type A Accident Investigation (Type A) following the July 2007 Tank S-102 waste spill at the DOE Hanford Nuclear Reservation. The Accident Investigation Board identified sixteen Judgements of Need (JON) in the areas of engineering, work processes, emergency management, industrial hygiene, and management and oversight. A Corrective Action Plan (CAP) was developed, approved, and implemented.

Following implementation, in April 2009, DOE conducted an effectiveness review of the Type A corrective actions. The objective of the review was to evaluate the effectiveness of the corrective actions in addressing and correcting the underlying causes of the JONs and preventing recurrence. The effectiveness assessment concluded that the corrective actions resulting from the Type A accident investigation were effective and complete. The assessment identified 26 opportunities for improvement. The DOE/ORP requested a formal response to address 14 of the 26 suggestions for continued improvement to include; 1) the plan (including specific actions planned) for implementing suggestions, 2) the dates when the specific actions will be completed and verified, and 3) the Problem Evaluation Request (PER) tracking number for each suggestion. This CAP addresses the following Suggestions for Continued Improvement:

S-HE-1-1 WRPS should revise drill scenarios to include a chemical attribute that requires more in-depth Industrial Hygiene (IH) response which may include a worker(s) in contact with tank waste, chemical spill, vapor event, etc.

S-MS-1-3 WRPS should update the Fiscal Year (FY) 2009 Integrated Assessment Schedule such that assessments evaluating the continued efficacy of the lessons learned program are conducted.

S-WC-3-1 A consistent enhanced work planning/document concurrence approach should be implemented for technical changes to Abnormal Operating Procedures.

S-WC-3-2 The Tank Operations Contractor (TOC) should conduct periodic awareness/proficiency training on the "Immediate Recovery Work" process for those personnel involved in the process.

S-WC-3-3 Procedure non-compliance events identified since the issue of WRPS letter to DOE-ORP, "Washington River Protection Solutions LLC Response to Abnormal Events Surveillance S-09-ESQ-TANKFARM-003, "'Washington River Protection Solutions LLC Root and Common Cause Analysis Results,"' dated April 8, 2009, should be considered when implementing the corrective actions identified in the report.

S-WC-3-4 The TOC should improve the self-identification and reporting (i.e. per the PER process) of procedure non-compliances to facilitate causal determination, trending, and/or resolution.

S-WC-4-1	The TOC should determine if and when telephone approval is acceptable for the release of minor work, and proceduralize the requirements if it is deemed allowable.
S-WC-4-2	The TOC should determine the appropriate level of radiological controls for "Immediate Recovery Work" as discussed in TFC-OPS-MAINT-C-01, *Tank Operations Contractor Work Control;* these controls must mesh with Section 4.10 of TFC-ESHQ-RP_RWP-C-04, *Radiological Work Permits* (i.e. consistent terminology-"immediate recovery" vs. 'emergency").
S-WC-4-3	The TOC should include a requirement to consider the need to develop industrial hygiene and safety controls in Section 4.3 of TFC-OPS-MAINT-C-01, *Tank Operations Contractor Work Control,* when preparing for "Immediate Recovery Work."
S-WC-4-4	The TOC should include definitions for "troubleshooting" and "routine work" in the work control procedure, TFC-OPS-MAINT-C-01, *Tank Operations Contractor Work Control.*
S-WC-4-7	WRPS should develop and conduct work control process training with shift managers and field work supervisors.
S-EM-60 10.1-1	Standing Order 07-008 should be revised to include a statement directing the length of time the Standing Order will remain in effect, and how the requirements of the order will be captured for future projects.
S-RCA-JON-8-1	Form A-6002-909, *Verification/ Validation (V& V) Checklist,* should be updated to require the Technical Authority to ensure critical tasks have been identified.
S-EM-62 OP.1 F-2-1	The TOC should incorporate continuing training on Technical Safety Requirements (TSRs) for Shift Managers; training should include the basis for each TSR, and information from the Documented Safety Analysis (DSA) including relevant accident scenarios and unmitigated consequences.

2.0 Corrective Action Methodology

A process based on Washington River Protection Solutions LLC (WRPS) procedure TFC-ESHQ-Q_C-C-01, Problem Evaluation Request, was used to develop this CAP. The Suggestions for Continued Improvement are documented in PERs in the WRPS Issues Management System. WRPS analysis of the Suggestions for Continued Improvement, Corrective Actions Taken, and Planned Corrective Actions will be documented and tracked in the associated PER.

3.0 Corrective Action Plan Structure

The CAP structure is as follows:

Suggestion for Continued Improvement Number: Number from Assessment.

Suggestion for Continued Improvement: Description from Assessment.

PER Tracking Number: WRPS PER identification number.

Responsible Manager: Assigned WRPS manager responsible for the analysis and corrective actions.

Evaluation: WRPS evaluation of the Suggestion for Continued Improvement.

Remedial Corrective Actions: The immediate actions taken.

Corrective Actions to be Taken: Planned Corrective Actions to implement the Suggestion for Continued Improvement.

4.0 Review and Approval of WRPS Corrective Action Plan

This CAP was developed by the assigned responsible manager and was approved by the Base Operations Manager.

5.0 Corrective Action Plan Reporting and Closure

Corrective Actions for the Suggestions for Continued Improvement will be tracked and monitored using the PER system.

To close an action, the responsible manager must provide objective evidence documenting completion of the actions. Closure documentation will be attached electronically to the associated PER.

6.0 Corrective Action Plan

6.1 S-HE-1-1

Suggestion for Continued Improvement: *WRPS should revise drill scenarios to include a chemical attribute that requires more in-depth Industrial Hygiene (IH) response which may include a worker(s) in contact with tank waste, chemical spill, vapor event, etc.*

PER Tracking Number: WRPS-PER-2009-0867

Responsible Manager: E. A. Tackett

Evaluation: WRPS has reviewed the Suggestion for Continued Improvement and agrees with the recommendation. Drill scenarios are developed based on results of the Emergency Planning Hazard Assessments that identify the hazards present in the facility. Scenarios are reviewed periodically for low consequence, high probability situations. Industrial Hygiene (IH) in-depth involvement will be reviewed on a routine basis and incorporated as required.

Remedial Corrective Actions: A chemical drill scenario was conducted on April 7, 2009 in support of the ORP/RL Emergency Preparedness (EP) Assessment and the S-102 Assessment in conjunction with the local DOE Office. The scenario involved a more in-depth IH response. WRPS will perform additional in-depth IH drill(s) within the calendar year.

Corrective Actions to be Taken:

Corrective Action	Deliverable	Action Owner	Due Date
Conduct in-depth IH specific drill within calendar year 2009.	Summary of drill scenario performed and verification of completion.	E. A. Tackett	1/1/2010

6.2 S-MS-1-3

Suggestion for Continued Improvement: *WRPS should update the Fiscal Year (FY) 2009 Integrated Assessment Schedule such that assessments evaluating the continued efficacy of the Lessons Learned program are conducted.*

PER Tracking Number: WRPS-PER-2009-0883

Responsible Manager: C. Maciuca

Evaluation: WRPS has reviewed the recommendation and agrees with the recommendation.

Remedial Corrective Actions: The WRPS Integrated Assessment Schedule was revised to include Specialty Assessment FY2009-ESHQ-S-0355, *WRPS Lessons Learned Program Effectiveness.*

Corrective Actions to be Taken:

Corrective Action	Deliverable	Action Owner	Due Date
Complete WRPS Specialty Assessment FY2009-ESHQ-S-0355, *WRPS Lessons Learned Program Effectiveness*	Completed Assessment	C. Maciuca	9/14/2009

6.3 S-WC-3-1

Suggestion for Continued Improvement: *A consistent enhanced work planning/document concurrence approach should be implemented for technical changes to Abnormal Operating Procedures.*

PER Tracking Number: WRPS-PER-2009-0870

Responsible Manager: T. Rahm

Evaluation: WRPS has evaluated the suggestion for improvement and agrees with the recommendations.

Remedial Corrective Actions: A revision to TFC-OPS-OPER-C-13, *Technical Procedure Control and Use*, has been drafted.

Corrective Actions to be Taken:

Corrective Action	Deliverable	Action Owner	Due Date
Revise TFC-OPS-OPER-C-13 to include the following: "Note: Changes to Abnormal Operating Procedures, other than inconsequential (as defined in TFC-ENG-SB-C-03) will be reviewed by the Procedure User, Shift Manager, Technical Authority, Security and Emergency Services/Events and Investigations, Safety, Radiological Control, and Environmental.	Revised Procedure	T. Rahm	7/5/2009

Corrective Action	Deliverable	Action Owner	Due Date
Revise TFC-OPS-OPER-C-13, Attachment A, "Review Matrix for Technical Procedures," to include Security and Emergency Services/Events and Investigations, Safety, Radiological Control, and Environmental as reviewers for changes (other than inconsequential) to AOPs.	Revised Procedure	T. Rahm	7/5/2009

6.4 S-WC-3-3

Suggestion for Continued Improvement: *Procedure non-compliance events identified since the issue of WRPS letter to DOE-ORP, Washington River Protection Solutions LLC Response to Abnormal Events Surveillance S-09-ESQ-TANKFARM-003, Washington River Protection Solutions LLC Root and Common Cause Analysis Results, dated April 8, 2009, should be considered when implementing the corrective actions identified in the report.*

PER Tracking Number: WRPS-PER-2009-0872

Responsible Manager: R. E. Gregory

Evaluation: WRPS evaluated the Suggestion for Continued Improvement and agrees with the recommendation. Subsequent to commencing the Root and Common Cause Analysis on WRPS Response to Abnormal Events, two procedural non-compliance events occurred (242-A Slurry Sampling and 242-A Lockout/Tagout Violation). Although these events were not incorporated into the Root and Common Cause Analysis, these events were considered during the development and implementation of Corrective Actions.

Remedial Corrective Actions: The following actions were completed to address procedure non-compliance events:

- A Conduct of Operations Council (COOC) was established on March 24, 2009. This council is the governing body for promoting continuous improvement in Conduct of Operations for the TOC. Goals of the COOC are to: 1) promote excellence and continuous improvement in Conduct of Operations (including Radiological Practices), 2) implement process changes that integrate Con Ops, human performance initiative (HPI), and Integrated Environment, Safety and Health Management System (ISMS), and 3) provide oversight and direction for company-wide Conduct of Operations and HPI related activities, guidelines,

priorities, monitoring, overall program effectiveness, communication, and lessons learned. (ref. WRPS-PER-2009-0385)

- On 4/24/09, the Base Operations Manager issued WRPS-0900641, Aggressive Management Observation Program Provides Results. The intent of the memo was to re-emphasize an aggressive Management Observation Program (MOP) to continually perform management oversight and encourage routine feedback. Focus areas identified to achieve disciplined operations include personal accountability, technical inquisitiveness, procedure compliance, and willingness to stop. (ref. WRPS-PER-2009-0385)

- A series of face-to-face briefings were performed within Base Operations and Single Shell Tank Retrieval and Closure Operations during April and May of 2009. Briefing topics included the timely identification of issues, questioning attitude, conservative decision making, procedure compliance, lessons learned, and formal communications. (ref. WRPS-PER-2009-0385)

- A Common Cause Analysis (CCA) was performed for similar events to the 242-A Slurry Sampling procedure non-compliance. The CCA was conducted utilizing event decomposition, historical review of events contained within the PER database, review of event investigation reports, historical performance metrics, and personnel interviews. The analysis identified the following primary common cause "Management Problem, Management Methods Less Than Adequate (LTA), Management Policy guidance/Expectations not well-defined, understood, or enforced." The analysis resulted in the generation of two new corrective actions to strengthen procedure compliance, command and control, and communications. (ref. WRPS-PER-2009-0471)

Corrective Actions to be Taken: No new corrective actions were generated as a result of this evaluation, however, the following planned corrective actions are in place to strengthen WRPS culture regarding strict procedure compliance:

- Update operator continuing training material to include Human Performance Initiative (HPI) training. ECD: 7/31/09 (ref. WRPS-PER-2009-0385)

- Develop a Conduct of Operations Improvement Plan to address weaknesses in Chapters 1, 2, and 4. The Conduct of Operation Improvement should include a means to reduce human error, increase management oversight and communications, and reinforcement of the questioning attitude. ECD: 7/31/09 (ref. WRPS-PER-2009-0471)

- Assemble a worker-level team to evaluate the active human errors (event "triggers") associated with the events described in CCA report for LTA Conduct of Operations at 242-A. Include an evaluation of "last-line-of-defense" tools/techniques used to prevent active human errors. Provide recommendations to the Conduct of Operations Council on tools, techniques, etc. that, if strengthened or implemented, will aid in the prevention of future similar events.

The team should include a cross-organizational representation of Bargaining Unit personnel, First Line Managers, and Operations Engineers. ECD: 7/20/09 (ref. WRPS-PER-2009-0471)

6.5 S-WC-3-4

Suggestion for Continued Improvement: *The TOC should improve the self-identification and reporting (i.e. per the PER process) of procedure non-compliances to facilitate causal determination, trending, and/or resolution.*

PER Tracking Number: WRPS-PER-2009-0873

Responsible Manager: C. Maciuca

Evaluation: WRPS has reviewed the recommendation and agrees with the areas of improvement identified.

Remedial Corrective Actions:

- The initiative to address the suggestion for continued improvement was completed by way of tailgate communications as part of ISMS verification activities. On May 18, 2009, a tailgate presentation was issued which included a knowledge test of the PER process with specific questions related to the document to be initiated (PER) for conditions that require resolution, trending, cause determination, or identification and tracking of corrective actions (including procedure non-compliances).

- Independent Assessment FY2009-WRPS-I-0005, *Base Operations Management Systems*, and FY2009-ESHQ-0355, *WRPS Lessons Learned Program Effectiveness,* have been added to the WRPS Integrated Assessment Schedule. These assessments will include an evaluation of the self-identification and reporting processes of procedure non-compliance related issues.

Corrective Actions to be Taken: No additional corrective actions necessary.

6.6 S-WC-4-1

Suggestion for Continued Improvement: *The TOC should determine if and when telephone approval is acceptable for the release of minor work, and proceduralize the requirements if it is deemed allowable.*

PER Tracking Number: WRPS-PER-2009-0857

Responsible Manager: J. Klos

Evaluation: WRPS evaluated the suggestion for continued improvement and agrees an evaluation is warranted. A team-approach evaluation of the process for telephone release of minor work activities will be performed. The resulting changes to the process will be proceduralized as warranted.

Remedial Corrective Actions: No remedial actions taken.

Corrective Actions to be Taken:

Corrective Action	Deliverable	Action Owner	Due Date
Utilizing a team-approach (soliciting input from end users), perform an in-depth evaluation to determine if telephone release of minor work is appropriate for certain situations.	Copy of evaluation	J. Klos	7/24/09
Implement changes, as necessary based on the evaluation, to TFC-OPS-MAINT-C-01, *Tank Operations Contractor Work Control.*	Revised procedure, as warranted.	J. Klos	7/24/09

6.7 S-WC-3-2, S-WC-4-2, and S-WC-4-3

It should be noted that an evaluation of the TFC-OPS-MAINT-C-01, *Tank Operations Contractor Work Control*, category "immediate recovery work" was performed to address the Suggestions for Continued Improvement items S-WC-3-2, S-WC-4-2, and S-WC-4-3. The improvement items are documented on individual PERs and vary by responsible manager, however, the collective evaluation and planned corrective action will adequately address the three improvement items.

Suggestion for Continued Improvement S-WC-3-2: *The Tank Operations Contractor (TOC) should conduct periodic awareness/proficiency training on the "Immediate Recovery Work" process for those personnel involved in the process.*

PER Tracking Number: WRPS-PER-2009-0871

Responsible Manager: T. Reynolds

Suggestion for Continued Improvement S-WC-4-2: *The TOC should determine the appropriate level of radiological controls for "Immediate Recovery Work" as discussed in TFC-OPS-MAINT-C-01, Tank Operations Contractor Work Control. These controls must mesh with Section 4.10 of TFC-ESHQ-RP-RPW-C-04, Radiological Work Permits, (i.e. consistent terminology – "immediate recovery" vs. "emergency."*

PER Tracking Number: WRPS-PER-2009-0875

Responsible Manager: J. Klos

Suggestion for Continued Improvement S-WC-4-3:

The TOC should include a requirement to consider the need to develop industrial hygiene and safety controls in Section 4.3 of TFC-OPS-MAINT-C-0l, Tank Operations Contractor Work Control, when preparing for "Immediate Recovery Work."

PER Tracking Number: WRPS-PER-2009-0875

Responsible Manager: J. Klos

Evaluation of S-WC-3-2, S-WC-4-2, and S-WC-4-3: WRPS reviewed the Suggestions for Continued Improvement and agrees with the recommendations. WRPS has the responsibility and authority to stabilize an event through Abnormal Operating Procedures (AOP) and Alarm Response Procedures (ARP) and other emergency response procedures. As such, during an event these procedures will be utilized to place the facility in a stable and safe condition. At which time, any recovery actions and/or corrective maintenance activities would be performed utilizing the work planning processes outlined in Section 4.0 of TFC-OPS-MAINT-C-01, *Tank Operations Contractor Work Control.* This process ensures the hazards associated with the work activity have been analyzed and mitigated. WRPS has reviewed this internally and with members of DOE/ORP staff. Therefore, the "immediate recovery" section of TFC-OPS-MAINT-C-01 is not deemed necessary. It is WRPS intent to remove this section from the work control procedure. Revisions to the processes/procedures are communicated in accordance with TFC-OPS-OPER-C-13, *Technical Procedure Control and Use* and/or TFC-BSM-AD-C-01, *Administrative Document Development and Maintenance.*

Remedial Corrective Actions: No remedial actions taken.

Corrective Actions to be Taken:

Corrective Action	Deliverable	Action Owner	Due Date
Revise TFC-OPS-MAINT-C-01 to remove reference to "immediate recovery work."	Revised procedure	J. Klos	7/24/09

6.8 S-WC-4-4

Suggestion for Continued Improvement: *The TOC should include definitions for "troubleshooting" and "routine work" in the work control procedure, TFC-OPS-MAINT-C-0l, Tank Operations Contractor Work Control.*

PER Tracking Number: WRPS-PER-2009-0877

Responsible Manager: J. Klos

Evaluation: WRPS has reviewed the Suggestion for Continuous Improvement and agrees. Definitions of "troubleshooting" and "routine work" should be included in TFC-OPS-MAINT-C-01, *Tank Operations Contractor Work Control.*

Remedial Corrective Actions: No remedial actions taken.

Corrective Actions to be Taken:

Corrective Action	Deliverable	Action Owner	Due Date
Revise TFC-OPS-MAINT-C-01 to define "troubleshooting" and "routine work."	Revised procedure	J. Klos	7/24/09

6.9 S-WC-4-7

Suggestion for Continued Improvement: *WRPS should develop and conduct work control process training with shift managers and field work supervisors.*

PER Tracking Number: WRPS-PER-2009-0880

Responsible Manager: L. Keith

Evaluation: WRPS has reviewed the Suggestion for Continued Improvement and agrees with the recommendation. Currently, there are several methods for delivering training on the work control process. Delivery methods for conducting training is determined as part of the training design and development process. On-the-job (OJT) is the highest level of training and is the delivery method previously chosen for Tank Farms work control training for Operations Engineers (which is the base qualification for a Shift Manager) and Field Work Supervisors. These elements are contained within qualification and requalification cards for these positions (ref. course numbers 350501, 350503, 354000, and 354002.)

Remedial Corrective Actions: No remedial actions taken.

Corrective Actions to be Taken: No additional corrective actions necessary.

6.10 S-EM-60 10.1-1

Suggestion for Continued Improvement: *Standing Order 07-008 should be revised to include a statement directing the length of time the Standing Order will remain in effect, and how the requirements of the order will be captured for future projects.*

PER Tracking Number: WRPS-PER-2009-0884

Responsible Manager: T. Reynolds

Evaluation: This Standing Order was canceled/closed on 7/23/08. Therefore, no other action is required associated with this Standing Order. Since that time, during C-110 Retrieval, a standing order was generated that defined the interface roles between the Single Shell Tank Retrieval and Closure organization and the Base Operations organization with regard to normal and abnormal conditions. This Standing Order was in effect during the retrieval of C-110 and has since been closed, now that the retrieval activities associated with C-110 are complete. The process of generating a Standing Order to document the interface between the organizations during retrieval activities will continue, as required with the closure of the Standing Order occurring once the retrieval activity is completed and agreed upon by DOE/ORP.

The Shift Managers review the existing Standing Orders on a quarterly basis per TFC-OPS-OPER-C-40, *Shift Instructions and Standing Orders*, for continued applicability.

Remedial Corrective Actions: Standing Order 07-008 was closed on 7/23/08.

Corrective Actions to be Taken: No additional corrective actions necessary.

6.11 S-RCA-JON-8-1

Suggestion for Continued Improvement: *Form A-6002-909, Verification/Validation (V&V) Checklist, should be updated to require the Technical Authority to ensure critical tasks have been identified.*

PER Tracking Number: WRPS-PER-2009-0885

Responsible Manager: T. Rahm

Evaluation: WRPS has evaluated the Suggestion for Improvement and agrees with the recommendation. The step which required the "technical authority" to ensure that critical tasks have been identified, was inadvertently removed from form A-6002-909 during a previous revision. The form was revised on 5/7/09 to address this recommendation.

Remedial Corrective Actions: Site Form A-6002-909 was revised on 5/7/09 to include Technical Authority, checkbox #18, "*Have critical tasks been identified?*"

Corrective Actions to be Taken: No additional corrective actions necessary.

6.12 S-EM-62 OP.1 F-2-1

Suggestion for Continued Improvement: *The TOC should incorporate continuing training on Technical Safety Requirements (TSRs) for Shift Managers; training should include the basis for each TSR, and information from the Documented Safety Analysis (DSA) including relevant accident scenarios and unmitigated consequences.*

PER Tracking Number: WRPS-PER-2009-0890

Responsible Manager: T. Reynolds

Evaluation: WRPS reviewed the suggestion for improvement and agrees with the recommendations. The Shift Managers have been trained in the past on the TSRs, however the training did not include the Basis. As part of the 2009, Change Notice 3 Amendment, the Shift Managers will be trained on the Basis. The first round of training will include two-thirds of the TSR controls. Training on the remaining one-third of the controls will be performed by the end of calendar year 2009. Scheduling and performance of the Safety Basis change training will be tracked in accordance with TFC-OPS-OPER-C-02, *Safety Basis Implementation Checklist Preparation, Review, and Approval.*

Remedial Corrective Actions: No remedial action taken.

Corrective Actions to be Taken: No new corrective actions were identified as a result of this review, however, the following planned corrective actions are in place to strengthen the TSR knowledge base within the TOC.

- Complete Documented Safety Analysis (DSA) and Technical Safety Requirements (TSR) Overview Training Briefings for designated operations and engineering personnel. ECD: 6/30/09 (ref. WRPS-PER-2008-0341)

- Conduct a performance-based evaluation of the effectiveness of TSR knowledge and compliance elements of the Shift Manager initial qualification, re-qualification, and continuing training programs. ECD: 9/30/09 (ref. WRPS-PER-2008-0341)

Task Number	Create Date	Subject	Originator	Status	Due Date
WRPS-PER-2009-0385.20	04/08/2009	WRPS-PER-2009-0385; SIG; EPA-01 Perform an end point assessment. 1. Review objective evidence from all corrective actions to ensure completeness a	^PER CAs	OPEN	2/28/10
WRPS-PER-2009-0385.19	04/08/2009	WRPS-PER-2009-0385; SIG; CA-06-01 Update course 350292 to include a discussion/demonstration of alarm response actions including AOPs, ARPs, and ERPs.	^PER CAs	OPEN	8/24/09
WRPS-PER-2009-0385.18	04/08/2009	WRPS-PER-2009-0385; SIG; CA-05-02 Evaluate compiling the IH responses provided in Finding S-09-ESQ-TANKFARM-003-F05 to increase the ease of informatio	^PER CAs	OPEN	6/24/09
WRPS-PER-2009-0385.17	04/08/2009	WRPS-PER-2009-0385; SIG; CA-05-01 Issue Lessons Learned bulletin emphasizing the importance of proper communication, contingency planning, response to	^PER CAs	COMPLETE	5/24/09
WRPS-PER-2009-0385.16	04/08/2009	WRPS-PER-2009-0385; SIG; CC-04-01 Schedule Radiological Control to perform a minimum of 2 management observations a month, focusing on compliance to t	^PER CAs	COMPLETE	4/24/09
WRPS-PER-2009-0385.15	04/08/2009	WRPS-PER-2009-0385; SIG; CATPR-04-01 Evaluate the implementation of requirements of HNF-5183 as the	^PER CAs	Action extended to 7/30/09 to allow consideration/review by TOC Radiological Control Forum	7/30/09
WRPS-PER-2009-0385.14	04/08/2009	WRPS-PER-2009-0385; SIG; CATPR-03-03 Perform a drill regarding the use of ERP-222S-009 and ATS-LO-200-110 for response to contamination in a radiolog	^PER CAs	COMPLETE	5/29/09
WRPS-PER-2009-0385.13	04/08/2009	WRPS-PER-2009-0385; SIG; CATPR-03-02 Develop procedure for preplanned actions for response to contamination in a radiological area (ATS-LO-200-110).	^PER CAs	COMPLETE	4/30/09
WRPS-PER-2009-0385.12	04/08/2009	WRPS-PER-2009-0385; SIG; CATPR-03-01 Revise ERP-222S-009 to clarify the entrance criteria for spills, releases, and CAM alarms. Deliverable: Ap	^PER CAs	COMPLETE	4/30/09
WRPS-PER-2009-0385.11	04/08/2009	WRPS-PER-2009-0385; SIG; DC-02-01 Provide briefing to HPTs and Radiological Control FLMs on this event and procedural changes made in action CATPR-02-	^PER CAs	COMPLETE	5/30/09
WRPS-PER-2009-0385.10	04/08/2009	WRPS-PER-2009-0385; SIG; CATPR-02-01 Review and update TFC-ESHQ-RP_MON-P-09, "Grab Air Sampling," to include immediate actions and notification to th	^PER CAs	COMPLETE	4/24/09

Task Number	Create Date	Subject	Originator	Status	Due Date
WRPS-PER-2009-0385.9	04/08/2009	WRPS-PER-2009-0385; SIG; CATPR-01-02 Ensure shift managers are briefed on the importance of 3-way communication including complete directions, repeat	^PER CAs	COMPLETE	5/24/09
WRPS-PER-2009-0385.8	04/08/2009	WRPS-PER-2009-0385; SIG; CATPR-01-01 Ensure shift managers are briefed on revised ARPs, AOPs, and ERPs in conjunction with CC-01. Deliverable: C	^PER CAs	OPEN	6/30/09
WRPS-PER-2009-0385.7	04/08/2009	WRPS-PER-2009-0385; SIG; CC-07 Re-emphasize an aggressive Management Observation Program (MOP) to continually perform management oversight and encoura	^PER CAs	COMPLETE	4/24/09
WRPS-PER-2009-0385.6	04/08/2009	WRPS-PER-2009-0385; SIG; CC-06 Perform at least six WRPS senior management oversight observations of table-top drills to monitor and ensure effectiven	^PER CAs	OPEN	7/30/09
WRPS-PER-2009-0385.5	04/08/2009	WRPS-PER-2009-0385; SIG; CC-05 Reinforce the requirement for Shift Operations to perform one table-top drill per shift per month. The table-top drill	^PER CAs	COMPLETE	4/24/09
WRPS-PER-2009-0385.4	04/08/2009	WRPS-PER-2009-0385; SIG; CC-04 Update operator continuing training material to include Human Performance Initiative (HPI) training. Deliverable: C	^PER CAs	OPEN	7/31/09
WRPS-PER-2009-0385.3	04/08/2009	WRPS-PER-2009-0385; SIG; CC-03 Provide face-to-face briefings to reiterate the expectations for Tank Farm, 222-S, and SST Retrieval and Closure person	^PER CAs	COMPLETE	5/27/09
WRPS-PER-2009-0385.2	04/08/2009	WRPS-PER-2009-0385; SIG; CC-02 Clarify roles and responsibilities for Industrial Hygiene management within Operations to clearly identify chain of com	^PER CAs	COMPLETE	4/24/09
WRPS-PER-2009-0385.1	04/08/2009	WRPS-PER-2009-0385; SIG; CC-01 Complete a review of Double-Shell Tank Pressurization related Alarm Response Procedures (ARPs), Abnormal Operating Proc	^PER CAs	COMPLETE	5/15/09

Save

Problem Evaluation Request (PER)

WRPS-PER-2009-0872
In Process/Work

PER No	Date of Discovery	Time of Discovery (24:00)	Project
WRPS-PER-2009-0872	04/24/2009	00:00	Procedures

Location

All Tank Farms

How Was Problem Discovered

DOE

Description of Concern or Problem

DOE Final Report on the Effectiveness of Corrective Actions for the Type A Accident Investigation of the Hanford S-102 Tank Waste Spill dated April 2009 states:

S-WC-3-3
Procedure non-compliance events identified since the issue of WRPS LLC Response to Abnormal Events Surveillance S-09-ESQ-TANKFARM-003 Root Cause Analysis Report WRPS-PER-2009-0385, dated March 31, 2009, should be considered when implementing the corrective actions identified in the report.

Objective evidence files indicated all Abnormal Operating Procedures (AOP) were reviewed and changes were made to TF-AOPs 005, 011, 015 and 018. TF-AOP-006 was initially changed, but ultimately its actions were incorporated into TF-AOP-011 and then TF-AOP-006 was cancelled. The assessor reviewed the changes, verifying content of the changes addressed shortcomings identified in the S-102 event. An enhanced work planning approach for the change process was verified by review of concurrence organizations identified on the changes and discussions with personnel. Other AOPs (003 and 004) that were not changed, but addressed similar types of events, were also reviewed by the assessor and determined to contain adequate flow between response procedures. Records of AOP validations via table-top drill activities were evident.

Revisions to AOPs were still in progress. TF-AOP-003 had a periodic review change pending, and was currently more than two months past due (February 6, 2009) for the change. A justification for continued use was approved on February 13, 2009. Also, the corrective action specified for PER 2008-1788 of September 10, 2008, stated AOPs are currently being reviewed against changes recently completed on Alarm Response Procedures, to identify and corrective any inconsistencies between the two. Completion of the action is due on April 30, 2009.

The AOP change process itself was reviewed to verify an enhanced work process continued to be used for subsequent technical changes to AOPs and to ensure S-102 corrective actions remained identifiable in history files. A Suggestion for Continued Improvement in this area was identified (see below) for consistency in concurrence designations. Specifically, a consistent enhanced work planning/document concurrence approach should be implemented for technical changes to Abnormal Operating Procedures. The corrective actions (CHG-WC-3.1/3.2) designated for the S-102 event specified that Operations, Emergency Preparedness (TFC-OPS-OPER-C-13, Attachment A designator "EP"), Industrial Hygiene (designator "S") and Radiological Control (designator "R"), as a minimum, should be included in the AOP change process. Review of the AOP technical changes made as a result of the S-102 event identified an inconsistent approach to designation and participation of enhanced work planning participants was implemented:
• TF-AOP-005, Rev B-7, contained only an "R" review designator, although the IH Program Manager and Emergency Management/Safeguards and Security Lead also signed the change for concurrence.
• Initial revisions (C-4 and C-5) to TF-AOP-006 before it was combined with TF-AOP-011 and cancelled, contained "E" (Rev C-4, only), "R," and "S," but in each case the Emergency Management/Safeguards and Security Lead also signed the changes for concurrence.
• TF-AOP-011, Rev B-11, contained only an "R" review designator, although the Emergency Management/Safeguards and Security Lead also signed the change for concurrence. The Safety Engineer signature was marked "N/A." Note: Revision C-0 was designated "E," "R," and "S," but was also signed by a delegate for the Emergency Preparedness Lead.
• Approval designators were not available for TF-AOP-015 (Rev B-14) and TF-AOP-018 (B-1) S-102 driven revisions, but in each case a Safety Engineer, Radiological Engineer and Emergency Management/Safeguards and Security Lead concurrence signature was evident.

The "Immediate Recovery Work" process was reviewed and discussed with personnel that would be involved in its implementation. As a result of the S-102 event, the TF-OPS-MAINT-C-01 "Emergency Recovery Work" process was renamed the "Immediate Recovery Work" process with the intent that it be used for events similar in nature to the S-102 event. Appropriately, the process has been infrequently used (personnel interviewed identified no known implementations). Perhaps because of this, personnel knowledge of the process and its application appeared limited, despite evidence of an awareness briefing having been provided to appropriate personnel in February 2008. Some personnel specified to be involved with the implementation process did not appear to be familiar with the process or their roles in it when questioned, and some demonstrated confusion as to who (by name) was being referred to as the actionee when the procedure specified the "Base Operations Manager" and/or the "ESH&Q Manager." Despite training on the process in 2008, it was evident that a number of personnel were either unfamiliar with the process or unclear on who was being designated to perform actions in the procedure (see Suggestion for Continued Improvement, below).

No entries into AOPs were observed by the review team. Therefore, effectiveness was reviewed via personnel interviews and reviews of recent PER information. The information reviewed identified issues with AOP entry and compliance:

• WRPS-PER-2009-0178 (January 27, 2009) identified an issue where TF-AOP-021 was not adequately followed;
• WRPS-PER-2009-0385 (March 11, 2009) identified a Concern and six Findings from a DOE-ORP surveillance in the area of response to abnormal events; and
• WRPS-PER-2009-0584 (April 7, 2009) identified a DOE-ORP FR Finding on failing to enter AOPs in a timely manner.
On April 14, 2009, the actions of TF-AOP-021 were not completed in their entirety when a radio announcement of the event was not made. No PER entry was made on the specifics of the non-compliance, but a PER (WRPS-PER-2009-0662) was entered identifying that TMACS was initially unaware of the shutdown.

In addition, several other procedure compliance issues have been identified in 2009:
• WRPS-PER-2009-0269 identified an instance where a step requiring engineering approval was missed in a work instruction;
• WRPS-PER-2009-0439 identified an issue where a continuous use procedure was not present when conducting the actions of the procedure; and
• WRPS-PER-2009-0471 identified where a DOE-ORP FR twice observed a procedure not being adequately followed.

The assessor noted that more than half of the recent AOP and other procedure non-compliance issues entered into the PER database were identified by oversight personnel external to the contractor's organization. TFC-ESHQ-Q_C-C-01, Problem Evaluation Request, Rev E, states, "A PER shall be initiated for conditions that require resolution, trending, cause determination, or identification and tracking of corrective actions." Since the assessors identified Senior Supervisory Watches and other supervisors and managers in the field during work activities, the assessors must assume that either these contractor oversight personnel are not recognizing procedure compliance issues that are occurring, or don't recognize the value of documenting such observations for causal determination, trending, and/or resolution. This issue was most prevalent in the case of WRPS-PER-2009-0662, discussed above, where a missed AOP step was identified by a DNFSB Site Representative. Rather than the contractor entering the item as a procedure non-compliance in PERs, the issue was entered by a TMACS Operator as an observation that TMACS was not being kept informed of alarms. As such, the significance level was designated as "PIE/CIM" ("a suggestion or industry report identifying process improvements, program enhancement, continued quality improvements, or recommendations, or used for evaluation of external lessons learned" – TFC-ESHQ-Q_C-C-01, Table 2) rather than more appropriately, a "PER with Resolution" ("An adverse condition which includes problems, such as failure to comply with the documented safety analysis, technical specifications, DOE orders, regulations, contract requirements, or administrative controls, procedures, instructions, noncompliances that adversely affect tank farm facility system hardware/software operability, reliability, or performance" - TFC-ESHQ-Q_C-C-01, Table 2). The assessor suggests the Tank Operations Contractor should ensure personnel are able to recognize procedure non-compliances and document their identification for causal determination, trending, and/or resolution.

Operations management acknowledged awareness of weaknesses in procedure compliance in general and AOPs specifically. A root and common cause analysis (WRPS Response to Abnormal Events Surveillance S-09-ESQ-TANKFARM-003) for the issues identified in WRPS-PER-2009-0385 above, and DOE-ORP Letter 09-ESQ-082, dated March 11, 2009, established three judgments of need in this area:
• Reestablish a culture committed to procedural compliance, conservative decision making, and questioning attitude;
• Perform procedure reviews for consistency and perform field observations to ensure procedure compliance and effective communications; and
• Strengthen training and qualification requirements relied upon to implement expectations.
The assessor suggests that procedure non-compliance events that have been identified since the root cause analysis has been performed should also be considered when implementing the corrective actions identified in the report (as approved/accepted by DOE-ORP).

The assessor attended the project's "CONOPS Council" meeting. Development of a conduct of operations improvement plan was discussed. The chairman of the council stated the three areas of greatest concern were procedure compliance, communication, and command and control.

Conclusions: AOP revisions to address S-102 lessons learned have been completed and validated via the table-top drill process. Personnel continue to identify issues with AOP content, but management appears to address the issues via accepted processes, and was currently ensuring AOP consistency with Alarm Response Procedures. Consistency in the approach to selection of which organizations participate in AOP concurrence is suggested. Improvement in personnel awareness and knowledge of the "Immediate Recovery Work" process also appears warranted. Finally, procedure compliance in general, and AOP compliance in particular, remain a challenge for the organization. A root cause analysis was recently completed in this area and a conduct of operations improvement plan is in development. Approval and implementation of each should improve performance in this area. Corrective actions of this JON have been completed. However, the corrective actions have not proven entirely effective in preventing recurrence of procedure compliance issues.

Requirement Not Satisfied	**Source Document Number**
Equipment Identification Number	**System Identification**
N/A	

Immediate actions Taken or Planned

Generated this PER for evaluation of the suggestion for continued improvement.

Recommended Corrective actions

Procedure non-compliance events identified since the issue of WRPS LLC Response to Abnormal Events Surveillance S-09-ESQ-TANKFARM-003 Root Cause Analysis Report WRPS-PER-2009-0385, dated March 31, 2009, should be considered when

implementing the corrective actions identified in the report.

Originator Contact			
No			
Originators Name	**Originators ID**	**Originators Phone**	**Date Initiated**
Rensink, Gail L	H0021008	(509) 372-0092	05/04/2009

SHIFT OPERATIONS REVIEW

Title			
DOE Final Report on the Effectiveness of Corrective Actions			
How Discovered		**Agency**	
FACREP Surveillance			
Reportability	**SSC Operability**	**Operability Review**	**Comp Measures Req**
Non-Reportable	N/A	N/A	
Describe actions Taken or Recommended			
No additional Base Ops Shift Office actions required at this time.			
SO Reviewer Name	**SO Reviewer ID**	**SO Reviewer Phone**	**SO Review Date**
Johnson, Brian A	H0003531	(509) 373-2696	05/04/2009

SCREENING

PER Significance Level			
PIE/CIM			
Independent Assessment Review	**Occurrence Report Number**	**Externally Identified**	
No		Yes	
Assigned Responsible Manager	**Facilities Rep / SSO**	**Safety Management Rep**	
Gregory, Rob		Mata, Beth L	
Program		**Safety Management Program**	
• N/A		• Procedures-Administrative	

PER Screening Comments

Hold -- pending receipt of additional information
(Nancy Brown 05/05/09)

PER SCREENING TEAM COMMENTS: Assign to Rob Gregory as a PIE/CIM.
(Nancy Brown 05/06/09)

Corrective action assignees from PER-2009-0385 may want to consider doing PER searches for relevant procedure noncompliances identified since March 31st of this year, and consider their impact on the response to PER-2009-0385.
(Craig Anderson 05/090/09)

Causal Code			
MGT/Comm/Train	**Human Performance**	**GEMS**	**Equip/Eng/Other**
Failed Barrier	**ORPS Code**	**Functional Area**	**Work Process**
	Not Applicable	Operations	• Operations Procedures • Procedures: Implementation, Compliance
ISMS	**Consequence Code**		
Provide feedback and continuous improvement	• Procedure - Operational - Procedure ambiguous, in error, could not be worked, was not used		
PER Screening Chair	**PER Screening Chair ID**	**PER Screening Chair Phone**	**PER Screening Date**
Brown, Nancy L	H0088797	(509) 373-0992	05/06/2009

PAAA REVIEW			
PAAA Screening	**PAAA Codes**	**Function Codes**	
Not subject to PAAA			
NTS Report Number	**NTS Report Date**		
Repetitive / Recurrent	**Programmatic**	**Intentional Violation / Misrepresentation**	
No	No	No	
PAAA Screening Comments			
PAAA Reviewer Name	**PAAA Review Date**		
Anderson, Craig E	05/05/2009		
PAAA Approver Name	**PAAA Approve Date**		
Anderson, Craig E	05/06/2009		

SENIOR MANAGEMENT REVIEW/CONCURRENCE			
TF Operations Morning Leadership Call			
N/A			
Instructions for Responsible Manager			
Evaluate suggestion, enter comments and required actions on PIE/CIM tab of the PER. Disposition in accordance with TFC-ESHQ-Q_C-C-01, Problem Evaluation Request.			
Senior Management	**Sr Mgmt ID**	**Sr Mgmt Phone**	**Sr Mgmt Review Date**
Brown, Nancy L	H0088797	(509) 373-0992	05/07/2009

CAUSE ANALYSIS
Description of Occurrence
Extent of Condition
Safety Significance
Generic Implications
Remedial Corrective Action
Causal Analysis, Apparent Cause and/or Root Cause Analysis

PIE/CIM
Evaluation of PIE/CIM Initiative
Evaluation: WRPS evaluated the Suggestion for Continued Improvement and agrees with the recommendation. Subsequent to commencing the Root and Common Cause Analysis on WRPS Response to Abnormal Events, two procedural non-compliance events occurred (242-A Slurry Sampling and 242-A Lockout/Tagout Violation). Although these events were not incorporated into the Root and Common Cause Analysis, these events were considered during the development and implementation of Corrective Actions. Remedial Corrective Actions: The following actions were completed to address procedure non-compliance events: • A Conduct of Operations Council (COOC) was established on March 24, 2009. This council is the governing body for promoting continuous improvement in Conduct of Operations for the TOC. Goals of the COOC are to: 1) promote excellence and continuous improvement in Conduct of Operations (including Radiological Practices), 2) implement process changes that integrate Con Ops, human performance initiative (HPI), and Integrated Environment, Safety and Health Management System (ISMS), and 3) provide oversight and direction for company-wide Conduct of Operations and HPI related activities, guidelines, priorities, monitoring, overall program effectiveness, communication, and lessons learned. (ref. WRPS-PER-2009-0385) • On 4/24/09, the Base Operations Manager issued WRPS-0900641, Aggressive Management Observation Program Provides

Results. The intent of the memo was to re-emphasize an aggressive Management Observation Program (MOP) to continually perform management oversight and encourage routine feedback. Focus areas identified to achieve disciplined operations include personal accountability, technical inquisitiveness, procedure compliance, and willingness to stop. (ref. WRPS-PER-2009-0385)

• A series of face-to-face briefings were performed within Base Operations and Single Shell Tank Retrieval and Closure Operations during April and May of 2009. Briefing topics included the timely identification of issues, questioning attitude, conservative decision making, procedure compliance, lessons learned, and formal communications. (ref. WRPS-PER-2009-0385)

• A Common Cause Analysis (CCA) was performed for similar events to the 242-A Slurry Sampling procedure non-compliance. The CCA was conducted utilizing event decomposition, historical review of events contained within the PER database, review of event investigation reports, historical performance metrics, and personnel interviews. The analysis identified the following primary common cause "Management Problem, Management Methods Less Than Adequate (LTA), Management Policy guidance/Expectations not well-defined, understood, or enforced." The analysis resulted in the generation of two new corrective actions to strengthen procedure compliance, command and control, and communications. (ref. WRPS-PER-2009-0471)

Corrective Actions to be Taken: No new corrective actions were generated as a result of this evaluation, however, the following planned corrective actions are in place to strengthen WRPS culture regarding strict procedure compliance:

• Update operator continuing training material to include Human Performance Initiative (HPI) training. ECD: 7/31/09 (ref. WRPS-PER-2009-0385)

• Develop a Conduct of Operations Improvement Plan to address weaknesses in Chapters 1, 2, and 4. The Conduct of Operation Improvement should include a means to reduce human error, increase management oversight and communications, and reinforcement of the questioning attitude. ECD: 7/31/09 (ref. WRPS-PER-2009-0471)

• Assemble a worker-level team to evaluate the active human errors (event "triggers") associated with the events described in CCA report for LTA Conduct of Operations at 242-A. Include an evaluation of "last-line-of-defense" tools/techniques used to prevent active human errors. Provide recommendations to the Conduct of Operations Council on tools, techniques, etc. that, if strengthened or implemented, will aid in the prevention of future similar events.

The team should include a cross-organizational representation of Bargaining Unit personnel, First Line Managers, and Operations Engineers. ECD: 7/20/09 (ref. WRPS-PER-2009-0471)

ATTACHMENTS

DOE-ORP FINAL REPORT OF THE EFFECTIVENESS OF CORRECTIVE ACTIONS FOR THE TYPE A ACCIDENT INVESTIGATION OF THE HANFORD S-102 TANK
Link to PER
WRPS 0901065 R1 Letter.doc.pdf
WRPS-0901065 R1 Enclosure.pdf

AUDIT HISTORY

Change Date	Auditor	Comments
05/07/2009 09:59	Brown, Nancy L	Responsible Manager Task Launched by Brown, Nancy L
06/02/2009 14:37	Glaman, Linda R	'SMP Owner' review was added to ensure evaulation against formal response. LBG

-- End of Report --
07/09/2009 03:50 PM

Task# WRPS-PER-2009-0872

E-STARS[R] Report
Task Detail Report
07/09/2009 1551

TASK INFORMATION			
Task#	WRPS-PER-2009-0872		
Subject	PIE; DOE Final Report on the Effectiveness of Corrective Actions		
Parent Task#		**Status**	Open
Reference		**Due**	07/03/2009
Originator	^PER Coordinator	**Priority**	Medium
Originator Phone		**Category**	PER
Origination Date	05/04/2009 1300	**Generic1**	None
Remote Task#		**Generic2**	None
Deliverable	PER Review	**Generic3**	None
Class	None	**View Permissions**	Global
Instructions	*No Instructions*		

ROUTING LISTS

1	Responsible Manager	Active
	Review completion against formal response to ORP.	
	• Gregory, Rob - Assign - Completed - 06/18/2009 0755 *Instructions:*	
	• Mata, Beth L - Review - Concur with comments - 06/18/2009 0756 *Instructions:*	
2	Review Initial PER	Inactive
	Review New PER	
	• ^SO(Johnson, Brian A) - Review - Concur - 05/04/2009 1837 *Instructions:*	
	• ^PER Screening(Brown, Nancy L) - Review - Concur - 05/06/2009 1517 *Instructions:*	
	• ^Mgr Review - Review - Cancelled - 05/07/2009 0959 *Instructions:*	

ATTACHMENTS

Attachments	1. DOE-ORP FINAL REPORT OF THE EFFECTIVENESS OF CORRECTIVE ACTIONS FOR THE TYPE A ACCIDENT INVESTIGATION OF THE HANFORD S-102 TANK 2. Link to PER 3. WRPS 0901065 R1 Letter.doc.pdf 4. WRPS-0901065 R1 Enclosure.pdf

COMMENTS

Poster	^PER Coordinator (Glaman, Linda R) - 06/02/2009 1438
	review role added. LBG 6-2-09
	'SMP Owner' review was added to ensure evaulation against formal response. LBG
Poster	Mata, Beth L - 06/18/2009 0756
	Concur

Task# WRPS-PER-2009-0872

	Concur with closure. ORP feedback was provided via the attached letter and enclosure.

TASK DUE DATE HISTORY

Modified	05/07/2009 0959 - ^PER Coordinator	**New Due Date**	07/03/2009 1630
Modified	05/07/2009 0959 - ^PER Coordinator	**New Due Date**	07/03/2009 1630
Modified	05/04/2009 1300 - ^PER Coordinator	**New Due Date**	05/06/2009 1630

SUB TASK HISTORY

No Subtasks

-- end of report --

INCOMING CORRESPONDENCE COVERSHEET

CORR-2009-0104

Author	Addressee	Correspondence No.
S. Charboneau/ORP	J. M. Armstead/WRPS	0901065 DOE-ORP: 09-TOD-030

Subject: CONTRACT NO. DE-AC27-08RV14800 – U.S. DEPARTMENT OF ENERGY, OFFICE OF RIVER PROTECTION (ORP) FINAL REPORT ON THE EFFECTIVENESS OF CORRECTIVE ACTIONS FOR THE TYPE A ACCIDENT INVESTIGATION OF THE HANFORD S-102 TANK WASTE SPILL

DISTRIBUTION

Washington River Protection Solutions
WRPS Correspondence Control
JC Allen-Floyd
JM Armstead
F Beranek
HS Berman
PB Brannan
MN Brosee ((Assingee))
RE Gregory
GN Hanson
DB Hardy
GJ Johnson
WJ Johnson
EM Larock
MA Lindholm
WE Ross
KJ Rueter
SM Sax
DL Shugars
DK Smith
BR Thomas

Priority:	**NORMAL**
Assignee:	M. N. Brosee
Received:	May 14, 2009
Due Date:	6/14/2009 – Respond in writing to the listed Suggestions for Continued Improvement as directed by ORP.

WRPS Correspondence Control
For Questions call: 376-0271
Outlook Address: ^WRPS Correspondence Control

U.S. Department of Energy
Office of River Protection
P.O. Box 450, MSIN H6-60
Richland, Washington 99352

MAY 13 2009

09-TOD-030

0901065

Mr. Mike Armstead, Contract Manager
Washington River Protection Solutions LLC
2440 Stevens Center Place
Richland, Washington 99354

Dear Mr. Armstead:

CONTRACT NO. DE-AC27-08RV14800 – U.S. DEPARTMENT OF ENERGY, OFFICE OF RIVER PROTECTION (ORP) FINAL REPORT ON THE EFFECTIVENESS OF CORRECTIVE ACTIONS FOR THE TYPE A ACCIDENT INVESTIGATION OF THE HANFORD S-102 TANK WASTE SPILL

Attached is the final report from the April assessment of the Effectiveness of Corrective Actions for the Type A Accident Investigation of the Hanford S-102 Tank Waste Spill. The effectiveness assessment concluded that the corrective actions resulting from the Type A accident investigation were complete. The effectiveness assessment final report was approved by the ORP Manager on May 7, 2009.

Please respond in writing to the following Suggestions for Continued Improvement within 30 days of receipt of this letter:

- S-HE-1-1
- S-MS.1-3
- S-WC-3-1
- S-WC-3-2
- S-WC-3-3
- S-WC-3-4
- S-WC-4-1
- S-WC-4-2
- S-WC-4-3
- S-WC-4-4
- S-WC-4-7
- S-EM-60 10.1-1
- S-RCA-JON-8-1
- S-EM-62 OP.1 F-2-1

The response should include:

- The plan (including specific actions planned) for implementing the suggestions;
- the dates when the specific actions will be completed and verified; and
- the Project Issues Evaluation Reporting System tracking number for each suggestion.

This letter is not considered to constitute a change to the contract. In the event the Contractor disagrees with this interpretation, it must immediately notify the Contracting Officer orally, and otherwise comply with the requirements of the Contract clause entitled 52.243-7, "Notification of Changes."

If you have any questions, please contact me, or your staff may contact Brian A. Harkins, Director, Tank Farm Operations Division, (509) 438-0483.

Sincerely,

Stacy Charboneau

Stacy Charboneau, Assistant Manager
for Tank Farms Project

TOD:BAH

Attachment

cc w/attach:
R. G. Quirk, DNFSB
W. M. Linzau, DNFSB
H. S. Berman, WRPS
P. B. Brannan, WRPS
M. N. Brosee, WRPS
R. E. Gregory, WRPS
G. N. Hanson, WRPS
D. B. Hardy, WRPS
E. M. Larock, WRPS
M. A. Lindholm, WRPS
W. E. Ross, WRPS
S. M. Sax, WRPS
D. L. Shugars, WRPS
D. K. Smith, WRPS
WRPS Correspondence

RECEIVED
MAY 14 2009
WRPS
CORRESPONDENCE CONTROL

Attachment
09-TOD-030

Final Report on the Effectiveness of Corrective Actions for the Type A Accident Investigation of the Hanford S-102 Tank Waste Spill – April 2009

Consisting of 125 pages, including coversheet

U. S. Department of Energy

Final Report on the Effectiveness of Corrective Actions for the Type A Accident Investigation of the Hanford S-102 Tank Waste Spill

April 2009

Submitted: _____ 5/7/09

Assessment Team Leader Date

Approved: _____ 5/7/09

Manager, Office of River Protection Date

TABLE OF CONTENTS

Signature Page 2
Table of Contents 3
Acronyms 5
Executive Summary 7
- Background/Scope 7
- Results 8
- Conclusions 10
- Rating 11
- Recommendations 12
- Suggestions for Continued Improvement 12

Appendix A—Corrective Action Evaluation Forms 15
- Type A Accident Investigation JONs
  - ENG-1 16
  - ENG-2 18
  - ENG-3 22
  - ENG-4 24
  - EM-1 27
  - EM-2 30
  - EM-3 34
  - HE-1 37
  - HE-2 41
  - HE-3 45
  - WC-1 50
  - WC-2 53
  - WC-3 56
  - WC-4 62
  - MS-1 71
  - MS-2 75
- EM-60 Trip Report
  - 4.0 79
  - 6.0 81
  - 10.1 83
  - 11.0 86
- S-102 Corrective Action Plan CH2M HILL Root Cause Analysis
  - JON-5 88
  - JON-8 92
  - JON-9 95
  - JON-13 99

Table of Contents (continued)

Emergency Response and Health Effects PERs 102
DOE ORP Self-Assessment 106
EM-62 Assessment
OP.1 F.1 110
CA.1 F-2 113
OP.1 F-2 115
OP.1 F-4 119
OP.1 SO-1 121

ACRONYMS

ALARA	As Low As Reasonably Achievable
AMH	AdvancedMed Hanford
AOP	Abnormal Operating Procedures
ATS	Analytical Technical Services
CA	Corrective Action
CAP	Corrective Action Plan
CH2M HILL	CH2M HILL Hanford Group, Inc.
CHG	CH2M HILL Hanford Group, Inc
CONOPS	Conduct of Operations
DOE	United States Department of Energy
DOE-ID	DOE Idaho Operations Office
DSA	Documented Safety Analysis
EALs	Emergency Action Levels
ECN	Engineering Change Notices
ECT	Event Coordination Team
EDT	Engineering Document Transmittals
EOC	Emergency Operations Center
EOC	Extent of Conditions
EM	Emergency Management
EMS	Emergency Medical Services
ENG	Engineering Design
EPHA	emergency planning hazards assessment
ERAP	Hanford Emergency Readiness Assurance Plan
ESQ	Environmental Safety and Quality
ESRB	Executive Safety Review Board
FH	Fluor Hanford
FLM	First Line Manager
FRI	Facility Representative Instruction
FR	Facility Representative
HAMTC	Hanford Atomic Metal Trades Council
HEPA	High Efficiency Particulate Air
HPI	Human Performance Improvement
HPT	Health Physics Technician
HQ	Headquarters
HRA	High Radiation Area
HVAC	Heat Ventilation Air Conditioning
ICP	Incident Command Post
IDMS	Integrated Document Management System
IH	Industrial Hygiene/Hygienist
IHT	Industrial Hygiene/Hygienist Technician
ISM	Integrated Safety Management
JON	Judgment of Needs
LTA	Less Than Adequate

MBAA	Material Balance Discrepancy Data
MOC	Manager On Call
MOP	Management Observation Program
MPOC	Medical Provider On Call
MS	Management System
NCO	Nuclear Chemical Operator
OA	Operational Awareness
OE	Operation Engineer
OJT	On the Job Training
ORP	Department of Energy's Office of River Protection
OSHA	Occupational Safety and Health Administration
OMSP	On-site Medical Service Provider
PER	Problem Evaluation Request
PHA	Process Hazard Analysis
PrHA	Process Hazard Analysis
PIC	Person in Charge
PISA	Potentially Inadequate Safety Analysis
QA	Quality Assurance
RA	Readiness Assessment
RCA	Root Cause Analysis
RCT	Radiological Controls Technician
RLEP	Emergency Plan Implementing Procedure
RPP	River Protection Project
RSR	Radiological Survey Report
SM	Shift Manager
SME	Subject Matter Experts
SMP	Safety Management Program
SOE	Stationary Operating Engineer (Power Operator)
SOG	Standard Operating Guidelines
SSC	Systems Structures and Components
SST	Single Shell Tank
SSW	Senior Supervisory Watch
TED	Tank Farm Engineering Division
TFC	Tank Farm Contractor
TOC	Tank Farms Operations Contractor
TOD	Tank Farms Operations Division
TSR	Technical Safety Requirements
TVIS	Tank Vapor Information Sheet
USQ	Unreviewed Safety Question
WC	Work Control
WHA	Work Site Hazards Analysis
WRPS	Washington River Protection Solutions, LLC
WTCRB	Waste Transfer Confinement Review Board

EXECUTIVE SUMMARY

BACKGROUND/SCOPE

The U.S. Department of Energy Office of Health, Safety and Security (HSS), conducted a Type A Accident Investigation ("Type A") following the July 2007 Tank S-102 waste spill at the DOE Hanford Nuclear Reservation. The Accident Investigation Board identified sixteen (16) Judgments of Need (JON) in the areas of engineering, work processes, emergency management, industrial hygiene, and management and oversight. A comprehensive corrective action plan (CAP) was developed, approved, and implemented.

In accordance with the requirements of DOE O 470.2B, *Independent Oversight and Performance Assurance Program*, DOE O 414.1C, *Quality Assurance*, and the approved CAP, an effectiveness review of the Type A corrective actions was conducted during the period April 14-24, 2009. The objective of the review was to evaluate the effectiveness of the corrective actions in addressing and correcting the underlying causes of the identified JONs and preventing their recurrence.

The assessment team, comprised of 10 federal staff from the DOE Richland Operations Office, the Office of River Protection, and the Idaho Operations Office, along with two Hanford contractors, used the standard criteria, review, and approach document detailed in the approved assessment plan to evaluate effectiveness of corrective actions. The results of the effectiveness reviews for each JON/Finding reviewed are detailed in Attachment A.

There were a total of 207 corrective actions within the scope of this review. The review team completed a 100 percent effectiveness review of all 16 Type A corrective actions (95 corrective actions). A number of other assessments were conducted as a result of the S-102 event. The following assessment corrective actions were also included in the scope of this review (the first four reviews listed were included in the November 21, 2007 comprehensive Type A CAP):

- EM-60 Trip Report Response
- S-102 Corrective Action Plan CH2M HILL Root Cause Analysis (RCA)
- Listing of Issues Identified by the Event Response and Health Effects Reports
- DOE-ORP Corrective Action Plan for ORP Self-Assessments
- EM-62 Hanford Site River Protection Assessment Report (March 2008)

RESULTS

Corrective actions were completed according to the approved CAP: During this review, 100 percent of the 95 corrective actions from the Type A CAP were reviewed by the assessment team. In all, 167 of the 181 corrective actions from the Comprehensive Type A CAP were reviewed and all 167 of those reviewed were completed as committed to in the CAP. Additionally, 26 actions were reviewed as part of this assessment at the request of the ORP Manager, associated with the March 2008 EM-62 assessment report. Some corrective actions were not reviewed due to time constraints and as permitted by DOE O 414.1C, *Quality Assurance* (i.e. paragraph 2.d.(2)(c).1 of Attachment 4 to the Order states: "A 100 percent review of all corrective actions is not required to determine effectiveness"). Corrective actions not reviewed included two actions for the EM-60 Trip Report (EM-60 13.0—retrieval pump design suggestions and training), and 12 actions associated with the CH2M HILL RCA (JON-9—ALARA design reviews, and JON-12--process control plans) were not reviewed. The team did note that the TFC completed a formal end-point assessment that evaluated the effectiveness of these actions. During the review, the assessment team identified that some documentation for adequate closure was not readily available in the objective evidence files and had to be requested during the review.

Corrective actions were effective in preventing recurrence of the JON/Finding: For each JON, Finding and Issue related to the S-102 comprehensive CAP, the corrective actions were effective in preventing recurrence of the identified issues, except for one Type A JON, WC-3, which was evaluated as partially effective (recommendation for completion provided). Overall, however, the Type A Comprehensive CAP was effective in preventing recurrence of the identified issues.

Corrective actions implemented as a result of the S-102 Tank Waste Spill were institutionalized and remain in place after contract transition from the TFC to the TOC: In all cases, the review team determined that the corrective actions implemented as a result of the S-102 comprehensive CAP were institutionalized into procedures that remain in place at the time of this review. Therefore, the change in contractors at the Hanford site has had no adverse effect on the implementation of the S-102 corrective actions.

Listed below, is a summary of the effectiveness of the corrective actions for each JON/Finding. In some cases, although the corrective actions may have been effective, assessors identified opportunities for continued improvement; these are provided as "Suggestions for Continued Improvement"; these "suggestions" should be evaluated and action taken where deemed appropriate. Where the corrective actions were determined to be partially effective, a "Recommendation" is provided for additional action and is fairly self-explanatory; this "Recommendation" should be tracked through the contractor's corrective action management system.

Summary of Results Listed by Jon/Finding

Type A

ENG-1	Effective
ENG-2	Effective with 1 Suggestion for Continued Improvement
ENG-3	Effective
ENG-4	Effective with 1 Suggestion for Continued Improvement
EM-1	Effective
EM-2	Effective
EM-3	Effective
HE-1	Effective with 1 Suggestion for Continued Improvement
HE-2	Effective
HE-3	Effective
WC-1	Effective
WC-2	Effective
WC-3	Partially Effective with 1 Recommendation/4 Suggested Improvements
WC-4	Effective with 7 Suggestions for Continued Improvement
MS-1	Effective with 3 Suggestions for Continued Improvement
MS-2	Effective with 2 Suggestions for Continued Improvement

EM-60 Trip Report Response

Effective with 1 Suggestion for Continued Improvement (note: EM-60 9.0 was reviewed as part of Type A JON WC-4; two actions for EM-60 13.0 were not reviewed)

S-102 Corrective Action Plan CH2M HILL Root Cause Analysis

RCA-1	Covered in Type A ENG-2 Write-up
RCA-2	Covered in Type A ENG-2 Write-up
RCA-3	Covered in Type A ENG-2 Write-up
RCA-4	Covered in Type A ENG-2 Write-up
RCA-5	Effective
RCA-8	Effective with 3 Suggestions for Continued Improvement
RCA-9	Effective with 1 Suggestion for Continued Improvement
RCA-13	Effective with 1 Suggestion for Continued Improvement

Note: Actions for the following RCA JONs were detailed in the Type A CAP—RCA-6, -7, -10, and -11. Twelve (12) actions associated with the CH2M HILL RCA (JON-9—ALARA design reviews, and JON-12--process control plans) were not reviewed due to time constraints and as permitted by DOE O 414.1C, *Quality Assurance* (i.e. paragraph 2.d.(2)(c).1 of Attachment 4 to the Order states: "A 100 percent review of all corrective actions is not required to determine effectiveness."). The team did note that the TFC completed a formal end-point assessment that evaluated the effectiveness of these actions.

Listing of Issues Identified by the Event Response and Health Effects Reports

All	Effective

DOE-ORP Corrective Action Plan for ORP Self-Assessments

All	Effective

EM-62 Hanford Site River Protection Assessment Report (March 2008)

CA.1 F-2	Effective
OP.1 F-1	Effective
OP.1 F-2	Effective with 1 Suggestion for Continued Improvement
OP.1 F-4	Effective
OP.1 SO-1	Effective with 1 Suggestion for Continued Improvement

CONCLUSIONS

Based upon the review of objective evidence files, document reviews, interviews, and work observations, the team determined the corrective actions taken to address the Type A findings have been **effective** in correcting the causes identified in the CAP and in preventing recurrence of the identified deficiencies. The corrective actions for one Type A JON, WC-3, were determined to be partially effective in preventing recurrence of the JON. One recommendation for completion is provided for JON WC-3.

This assessment focused on the Type A Comprehensive CAP and the effectiveness of those actions in preventing recurrence. As such, the review conformed to the requirements of Attachment 4 of DOE O 414.1C, *Quality Assurance*, "Corrective Action Management Program." However, because this review was extensive, consisting of a large review team and including many different programmatic areas, the review team did not summarily discount deficiencies that were outside the scope of the review. During the course of the review (and as requested by the organizations being assessed), the review team did identify some deficiencies, some of which were beyond the scope of the review. When reviewing these deficiencies in their entirety, the team concluded that there were three specific areas where the TOC should apply focused management attention (It should be noted that the first area, Conduct of Operations/Culture was directly associated with Type A JON WC-3, which has been determined to be partially effective in corrective action effectiveness):

Conduct of Operations/Culture: Based on a review of DOE Facility Representative reports, Occurrence Reports, and Problem Evaluation Requests (PER), the TOC continues to experience breakdowns in conduct of operations, including instances of procedure compliance problems. The entire TOC workforce, including first line management and above, need to operate within the fundamental principle of following and adhering to procedures as written. In order to establish this mindset and culture, the entire workforce needs to be engaged and operating within this fundamental principle to ensure success and

establish defense in depth reinforcement from the bottom up and from the top down. During the review, however, the team observed adequate conduct of operations performance and no instances of procedure non-compliance. There were many work activities observed where the jobs were stopped for procedure or material problems; this was observed by the team to be a noteworthy practice.

Contractor Assurance System: Throughout the review, the review team identified many instances where contractor self-assessment and internal oversight processes should have found and corrected many of the problems identified during this review. Although the review team did not identify programmatic failures of the contractor assurance system, the nature and number of the deficiencies identified in this report clearly indicated weaknesses in contractor self-assessment and internal oversight processes. It is critical to the success of the TOC (and also DOE) to have a robust contractor assurance system to self-identify and correct problems, and to identify opportunities for continued improvement.

Work Planning, Control, and Execution: The review team identified a number of opportunities for improvement in the work control procedure. Additionally, the team noted several instances where work did not occur due to various reasons, including training problems, material problems, procedure problems, and poor planning. Although one manager reported that the weekly work completion rate was in excess of 90 percent, the review team observed work execution/completion rates closer to 33 percent. The review team did not determine the cause for the disparity in the work completion rates. However, it was apparent that the "greater than 90 percent completion rate" may not be representative of actual work completion rates in light of work performance observed by the team. TOC management needs to evaluate how this performance metric is calculated, ensure it reflects reality, and focus attention on the area of work planning, control, and execution in order to improve performance.

RATING

Overall, the team rated the contractor as **effective** in correcting the weaknesses identified in the Type A Comprehensive CAP, with one Recommendation for additional action and several suggestions for continued improvement. Although the team identified some areas that need improvement and focus (conduct of operations, contractor assurance, work control), the results in those areas did not have an adverse impact on the overall effectiveness rating of the Type A Comprehensive CAP effectiveness. As identified in this report, the team did determine one Type A JON, WC-3, corrective actions to be partially effective; however, the overall determination by the team was that the Type A Comprehensive CAP completed actions were effective at preventing recurrence of an event similar to the July 27, 2007 S-102 Tank Waste Spill.

RECOMMENDATIONS

There was one Recommendation identified for WRPS to improve performance in conduct of operations. The team recommends that the following "Recommendation for Completion" be entered into the WRPS issues management systems and be tracked to closure:

R-WC-3-1
WRPS should complete the corrective actions to improve Conduct of Operations and response to abnormal events identified by WRPS letter to DOE-ORP, "Washington River Protection Solutions LLC Response to Abnormal Events Surveillance S-09-ESQ-TANKFARM-003, 'Washington River Protection Solutions LLC Root and Common Cause Analysis Results,'" dated April 8, 2009, by the dates specified in the enclosure, and conduct an effectiveness review by the end of fiscal year 2009 (see Corrective Action Evaluation form starting on page 56 of this report for details).

SUGGESTIONS FOR CONTINUED IMPROVEMENT

In addition to the Recommendation, the team identified 26 opportunities for continuous improvement that are identified as "Suggestions for Continued Improvement"; these are also provided in the individual Corrective Action Evaluation Forms for each JON/Finding in this report. The ORP Manager will require a formal response from WRPS to address several of the suggestions provided below; this will be addressed in the ORP letter transmitting the report to the TOC.

S-JON ENG-2-1
The WTCRB charter should require a readily accessible, retrievable record of board meeting minutes.

S-JON ENG-4-1
ORP should provide the TOC a specified date for the implementation of Safety Basis Amendment-045.

S-HE-1-1
WRPS should revise drill scenarios to include a chemical attribute that requires more in-depth IH response which may include a worker(s) in contact with tank waste, chemical spill, vapor event, etc.

S-MS.1-1
WRPS should evaluate the occurrence reporting/causal analysis processes in order to improve compliance with the requirements of DOE M 231.1-2, and to improve the timely identification and completion of corrective actions for reportable occurrences.

S-MS.1-2
DOE-ORP and WRPS should collaboratively work to improve the timeliness of final occurrence report submittals.

S-MS.1-3
WRPS should update the FY2009 Integrated Assessment Schedule such that assessments evaluating the continued efficacy of the lessons learned program are conducted.

S-MS.2-1
ORP should increase tank farm field presence of SMEs to strengthen field oversight, and to improve support to the tank farm FRs.

S-MS.2-1
ORP should consider including all QA oversight activities (surveillances) on the integrated assessment schedule (those conducted beyond the established schedule are not normally added to the schedule once completed).

S-WC-3-1
A consistent enhanced work planning/document concurrence approach should be implemented for technical changes to Abnormal Operating Procedures.

S-WC-3-2
The TOC should conduct periodic awareness/proficiency training on the "Immediate Recovery Work" process for those personnel involved in the process.

S-WC-3-3
Procedure non-compliance events identified since the issue of WRPS letter to DOE-ORP, "Washington River Protection Solutions LLC Response to Abnormal Events Surveillance S-09-ESQ-TANKFARM-003, 'Washington River Protection Solutions LLC Root and Common Cause Analysis Results,'" dated April 8, 2009, should be considered when implementing the corrective actions identified in the report.

S-WC-3-4
The Tank Operations Contractor should improve the self-identification and reporting (i.e. per the PER process) of procedure non-compliances to facilitate causal determination, trending, and/or resolution.

S-WC-4-1
The TOC should determine if and when telephone approval is acceptable for the release of minor work, and proceduralize the requirements if it is deemed allowable.

S-WC-4-2
The TOC should determine the appropriate level of radiological controls for "Immediate Recovery Work" as discussed in TFC-OPS-MAINT-C-01, *Tank Operations Contractor Work Control*; these controls must mesh with Section 4.10 of TFC-ESHQ-RP_RWP-C-04, *Radiological Work Permits* (i.e. consistent terminology—"immediate recovery" vs "emergency").

S-WC-4-3
The TOC should include a requirement to consider the need to develop industrial hygiene and safety controls in Section 4.3 of TFC-OPS-MAINT-C-01, *Tank Operations Contractor Work Control*, when preparing for "Immediate Recovery Work."

S-WC-4-4
The TOC should include definitions for "troubleshooting" and "routine work" in the work control procedure, TFC-OPS-MAINT-C-01, *Tank Operations Contractor Work Control.*

S-WC-4-5
The TOC should revise Attachment B of TFC-OPS-MAINT-C-01, *Tank Operations Contractor Work Control*, to limit use of the word "ensure" when developing work documents; "ensure" is an ambiguous action word.

S-WC-4-6
The TOC should revise TFC-OPS-MAINT-C-01, *Tank Operations Contractor Work Control*, Section 4.4.1.3, Step 7, to remove ambiguity; the step currently directs the Field Work Supervisor/worker to "Follow applicable sections" of the procedure.

S-WC-4-7
WRPS should develop and conduct work control process training with shift managers and field work supervisors.

S-EM-60 10.1-1
Standing Order 07-008 should be revised to include a statement directing the length of time the Standing Order will remain in effect, and how the requirements of the order will be captured for future projects.

S-RCA-JON-8-1
Form A-6002-909, *Verification/Validation (V&V) Checklist* should be updated to require the Technical Authority to ensure critical tasks have been identified.

S-RCA-JON-8-2
Procedure TFC-OPS-MAINT-C-01, *Tank Operations Contractor Work Control* should contain critical task guidance.

S-JON-9-1
The 241-C-110 Transfer Survey Worksheet should be a controlled document/form to ensure that transcription errors are prevented.

S-RCA JON-13.1-1
Actions that comprehensively address the issue(s) identified in the CH2MHill Root Cause Analysis Report JON 13 should be included in the closure evidence files.

S-EM-62 OP.1 F-2-1
The Tank Operations Contractor should incorporate continuing training on Technical Safety Requirements for Shift Managers; training should include the basis for each TSR, and information from the DSA including relevant accident scenarios and unmitigated consequences.

S-EM-62 OP.1 SO-1-1
Reevaluate the processes of planning, scheduling and releasing daily work items.

APPENDIX A
Corrective Action Evaluation Forms

Corrective Action Evaluation Form
Type A JON ENG 1

JON/Finding:
Type A JON ENG-1, CH2M HILL needs to improve incorporation of the design features, testing, and operating limits/ specs into operating procedures associated with the S-102 tank and the Seepex pump to ensure its ability to move S-102 waste without becoming fouled.

Corrective Actions Reviewed:

CHG-ENG-1.1
Inactivate all retrieval and transfer Procedures.

CHG-ENG-1.2
Revise and implement (implement defined as procedure verification, validation, and training) the process for preparing waste retrieval and transfer operating procedures. The process will define requirements for how design features, operating limits and criteria, and retrieval process requirements are incorporated into operating procedures, including requirements for independent verification of valves in waste transfer routes and radiological monitoring requirements associated with implementing technical safety requirements (TSRs) for leak detection. The procedure will require a review of the acceptability of testing and operating experience on the retrieval pump(s) which will be used.

CHG-ENG-1.3
Revise and implement process for new retrieval equipment development to evaluate simulant testing

Documents Reviewed:

- TFC-OPS-OPER-C-49, *Development of Waste Retrieval and Transfer Operating Procedures*
- TFC-PLN-90 Rev 2, *Technology Development Management Plan*
- Training records for classes on TFC-OPS-OPER-C-49 and TFC-PLN-90
- Active and inactive procedures database, Washington River Protection Solutions Intranet
- TO-220-113, *Over-Ground Transfer from 241-C-110 to 241-AN-106 and Sluicing of Tank 241-C-110*
- Operations/Process Control Matrix and Verification and Validation Checklist for TO-220-113

Activities/Operations Observed:

None

Interviews:

- Acting Manager, West System Engineering, Washington River Protection Solutions
- Two Procedure Technical Writer/Editors, Base Operations, WRPS

A document review of the corrective actions and evidence files indicates adequate completion of the Judgment of Need corrective actions. Follow-up interviews were conducted to assess the effectiveness of the corrective actions. The results are that the corrective actions for JON ENG-1 have been effective in addressing the Judgment of Need.

Conclusions:

The JON as written specifically addressed the use of the SEEPEX pump for tank S-102. CH2M Hill's Corrective Actions expanded the scope of the JON to all tank retrieval and transfer procedures and all retrieval equipment. This was appropriate since the SEEPEX pump in Tank S-102 will not be used again, but the process improvement will be applied to any new technologies. Corrective Action ENG 1.1 to inactivate all retrieval and transfer procedures was confirmed complete by reviewing printouts from the on-line procedures database and noting that all retrieval and transfer procedures in effect as of the corrective action plan were marked inactivated and were not available for use. Corrective Action ENG 1.2 to revise and implement the process for procedure development was confirmed complete by reviewing the revised procedure TFC-OPS-OPER-C-49 and training records. Corrective Action ENG 1.3 to revise and implement the process for developing new retrieval equipment was confirmed complete by reviewing the revised Plan TFC-PLN-90 and training records.

The effectiveness of the corrective actions was evaluated by reviewing a tank waste transfer procedure that was issued using the revised procedure development process and interviewing several procedure writers and an engineering manager. Only one procedure has been issued under the revised development process, although several more are in various stages of development. Review of the procedure's process control matrix and interviews with the procedure writers indicate that the revised development process was fully implemented and institutionalized. The revised procedure involved using a new pump, and interviews with engineering staff and the procedure writers indicate that the equipment was tested with a simulant and under conditions expected in the tank, implementing the provisions of Corrective Action ENG 1.3.

Rating:

Effective

Recommendation for Completion:

None

Suggestions for Continued Improvement:

None

Reviewer:

Earl Hughes, DOE-HQ, Office of Health, Safety and Security

Corrective Action Evaluation Form
Type A JON ENG 2

JON/Finding: Type A JON ENG-2:
CH2M HILL needs to revise its design review processes, procedures and implementation to ensure approved designs are technically correct and satisfy the requirements of the DSA.

Corrective Actions Reviewed:

CHG-ENG-2.1:
Conduct an independent review of engineering design program issues and provide recommended corrective actions to strengthen the program and its implementation. Evaluate recommendations and implement corrective actions

CHG-ENG-2.2:
Develop process hazards analysis (PHA) procedures and processes to ensure identification of hazards and controls for both TSR level hazards, and higher frequency, lower consequence hazards that are of significance for emergency response and environmental compliance with emphasis on preventive controls over mitigative controls, including process to train and assign designated personnel as lead PHA team leaders.

CHG-ENG-2.3:
Revise design review procedures, using results of independent review as a guide. Clarify roles and responsibilities, and provide detailed guidance/criteria for review of in-house and subcontracted engineering design products. Define a graded approach for design review of engineering products, including requirements for intermediate design reviews and formal disposition of review comment resolutions.

CHG-ENG-2.4:
Establish and implement a process to perform a thorough extent of condition (EOC) review for systems connected to waste storage tanks to determine potential waste transfer paths and ensure that such systems incorporate applicable TSR controls. This process will be applied to each transfer prior to operation.

CHG-ENG-2.5:
Adopt and implement a management of change process similar to that described in Occupational Safety and Health Administration (OSHA) standard 29 CFR 1910.119, *Process Safety Management of Highly Hazardous Chemicals.*

DOE-MS-2.8:
Review the existing contractor process hazard analyses and associated design features for retrieval systems to ensure nuclear safety and other safety requirements are met. This action verifies implementation of effectiveness of action CHG-2.2.

Documents Reviewed:

- CH2M-PER-2007-1738
- E-STARs Report CH2M-PER-2007-1738
- E-STARS Report CH2M-PER-2007-1738.1
- E-STARS Report CH2M-PER-2007-1738.2
- E-STARS Report CH2M-PER-2007-1738.3
- E-STARS Report CH2M-PER-2007-1738.4
- E-STARS Report CH2M-PER-2007-1738.5
- Engineering Design Program Review, dated 10/9/2007
- S-102 Type A Accident Report: Supplementary Corrective Action Closure Package, E-Stars Task#: CH2M-PER-2007-1738.2
- TFC-ENG-DESIGN-P-17, Rev C-3, Design Verification
- RPP-RPT-37883, Rev 0, Design Review Report for the C-110 Waste retrieval System
- RPP-PLAN-40419, Rev 0, Design Verification Plan 241-C-111 Waste Retrieval System
- TFC-ENG-DESIGN-C-06, Rev G, Engineering Change Control
- TFC-CHARTER-37, Rev A, Waste Transfer Confinement Review Board
- TFC-ENG-FACSUP-C-26, Rev A, Waste Leak Path Evaluations
- RPP-RPT-38246, Rev 0 and A 241 C-110 Waste Retrieval System Process Hazard Analysis
- RPP-RPT-35922, Rev 0 and A 241 C-109 Waste Retrieval System Process Hazard Analysis
- TE-08-046, Technical Evaluation
- TE-08-047, Technical Evaluation
- TE-08-048, Technical Evaluation
- Operational Awareness Report, Report #3514

Activities/Operations Observed:

None

Interviews:

- WRPS Manager, Central Design Authority and Standards
- WRPS Engineering Program Specialist, Central Design Authority and Standards
- WRPS Nuclear Safety and Licensing Engineer (2)
- WRPS C-Farm Engineering Manager
- WRPS C-Farm Project Engineer
- WRPS Chairman, Waste Transfer Confinement Review Board
- WRPS Quality Assurance Engineer

Results:

A document review of the finding corrective actions and evidence files supporting completion of required actions indicate that all corrective actions have been adequately completed. Follow-up interviews were conducted to assess the effectiveness of the corrective actions to address the issues identified by JON ENG-2. The results are that the corrective actions for JON ENG-2 have been effective in addressing the Judgment of Need.

The design program independent review identified a need for independent and peer reviews, a reconstitution of the Design Authority position, and a management of change process for those design and process changes which are evaluated from a process safety perspective and do not require entry into the USQ process.

New process hazard analysis procedure TFC-ENG-DESIGN-C-35, "Process Hazard Analysis" and TFC-ENG-STD-28, "Process Hazard Analysis Standard" were developed to strengthen considerations of "impact of change on safety and health." Further enhancements to the PrHA process were developed that integrated the process hazard analysis process and the management of change process (ENG-2.5). DOE conducted a review of the PrHA process as part of the Type A CAP MS-2.8 in Operational Awareness Report #3514. The report stated that the PrHA process was adequate in evaluating processes for their impact on safety and health.

The development of the PrHA procedure and standard allows work process changes to be evaluated separately from (but not in lieu of) the safety basis development process. The process considers the complete spectrum of normal, abnormal, process upset, and accident conditions. The PrHA process requires project or individual Engineering Document Transmittals (EDTs) or Engineering Change Notices (ECNs) to be screened to determine whether a PrHA is required to assess the impact of the change. Screening also identifies the appropriate technique to evaluate the change. Review of training attendance rosters indicated that an adequate pool of personnel have been trained on the PrHA process. Review of waste retrieval system process hazard analyses indicate the PrHA process has been implemented and conforms to the expectations of the corrective actions. In addition, the PrHA reports reviewed were thorough and comprehensive. Effectiveness of ENG-2.2 is evident by the several PrHA sessions held that have afforded the opportunity for the identification of new accident scenarios, initiating causes and consideration of the appropriateness of existing controls.

At the time of the S-102 event, all engineering design was subcontracted to outside engineering firms. This is still the current practice. The Design Verification procedure was revised to clarify roles and responsibilities, provide detailed guidance for review of in-house and subcontracted engineering design products, define a graded approach for design review of engineering products, and require formal disposition of review comment resolutions. In addition, revisions were made to the Design Review Checklist to include an item for liquid waste handling systems and components and enhance considerations of credible non-standard conditions.

Prior to the S-102 event the design review team consisted of members of the integrated project team (project engineers, SMEs, nuclear safety engineers, operations personnel, etc.) and design reviews did not require formal documentation of comments, questions, or resolutions. The revised implemented design verification process requires an independent senior lead discipline engineer to participate on the design review team to provide independent and broad oversight of the review and requires formal comment resolution. The assessment team reviewed a design review report completed under the new process. It conformed to the expectations of the revised design verification procedure and appropriate engineering discipline leads were assigned to the review team. Comments documented on a completed Review Comment Record reviewed were logical and focused on compliance with requirements and requests for clarifications. One comment referenced the S-102 event indicating the consideration of past events and how they may apply to current designs and planned activities and is an indication of the effectiveness of ENG-2.1 and 2.3. All comments were formally resolved and recorded. Personnel interviewed

expressed confidence with the modifications made to the design process and that changes have not created a major impact on schedule.

Development of the Waste Leak Path Evaluations procedure provides the tools and methodology for engineers to perform technical evaluations of waste transfer retrieval system interfaces through which waste could be released. The Waste Transfer Confinement Review Board (WTCRB) was developed to provide the final check in the waste transfer process to verify design, routing, and interfaces. The WTCRB convenes prior to each waste transfer activity (approximately 10 transfer activities to date). All transfers since the S-102 event forward have undergone technical evaluation and review by the WTCR. A WTCRB quorum is one chairperson and one other member, both appointed by the Chief Engineer, but typical attendance at the WTCRB meetings includes SMEs and multiple engineering discipline personnel. Although the charter does requires WTCRB meeting minutes to be recorded, only the chairperson of the WTCRB personally maintains hand written meeting minutes for all previously held WTCRB meetings. As evidence of the effectiveness of ENG 2.4, early in the implementation of the WTCRB, several leak paths were identified that were not previously identified during design reviews or that were identified but inadequately dispositioned. These involved waste conveyance through electrical cables and the waste jet momentum leak scenario. The product of the waste transfer leak path process is a completed technical evaluation endorsed by the WTCRB.

Conclusion: The corrective actions as approved have been completed as described. Based on a review of documentation and discussions and interviews the reviewer has concluded that the completed corrective actions have been effective in addressing the JON ENG-2. This review also included an evaluation of the effectiveness of CH2M Hill Root Cause Analysis JONs 1, 2, 3, and 4.

Rating:

Effective

Recommendation for Completion:

None

Suggestions for Continued Improvement:

S-JON ENG-2-1
The WTCRB charter should require a readily accessible, retrievable record of board meeting minutes.

Reviewer:

Jacquelyn Carrozza, DOE-ID, Nuclear and Safety Performance

Corrective Action Evaluation Form
Type A JON ENG 3

JON/Finding:
Type A JON ENG-3, CH2M HILL needs to perform an engineering analysis of whether the S-102 pump can continue to be safely operated following the deformation that occurred when excessive shaft torquing was applied during maintenance.

Corrective Actions Reviewed:

CHG-ENG-3.1
Inactivate the retrieval S-102 pump.

CHG-ENG-3.2
Issue a lessons learned bulletin addressing the inadequate documentation and communication of the planned risk to be taken with the Seepex pump.

Documents Reviewed:

- CH2M Hill Problem Evaluation Request CH2M-PER-2007-1739 Rev 1
- CH2M Hill Engineering Change Notice 75287, *Inactivate the S-102 Retrieval Pump at Riser 7*
- CH2M Hill Engineering Change Notice 724596, *Removal of S-102's Retrieval Instrumentation and Electrical Power Systems*
- CH2M Hill Engineering Change Notice 724952, *S-102 Equipment Removal Closeout Inspection*
- Tank Farm Work Instruction CLO-WO-07-1340, *S-102 Remove Contaminated Equipment around R-7*
- Tank Farm Work Instruction CLO-WO-07-1545, *S-102 Dispose of Equipment outside the High Radiation Area*
- Tank Farm Work Instruction CLO-WO-07-1840, *S-102 Change Breather Filter to Radial Filter*
- CH2M Hill Lessons Learned Bulletin IB-07-040
- TFC-OPS-MAINT-C-01, REV N-9, *Tank Operations Contractor Work Control*
- TFC-ENG-FACSUP-C-02, REV B-10, *Operability/Technical Evaluations*
- 3-LDD-055, *Troubleshooting and Repair of Liquid Detector*
- Tank Farm Work Instruction TCF-09-1192, *Replace and test LD3 Relay on AW02D-WT-LDST-188*
- Tank Farm Work Instruction TFC-WO-09-1425, *Troubleshoot Low Insulation Resistance in AN Tank Farm*
- Tank Farm Work Instruction TFC-WO-09-1446, *241-AN VTP A-train Trouble Shoot Flow Sample System*

Activities/Operations Observed:

None

Interviews:

- Acting Manager, West System Engineering, Washington River Protection Solutions
- Manager, Base Operations Work Planning, Washington River Protection Solutions

Results:

A document review of the corrective actions and evidence files indicates adequate completion of the Judgment of Need corrective actions. Follow-up interviews were conducted to assess the effectiveness of the corrective actions. The results are that the corrective actions for JON ENG-3 have been effective in addressing the Judgment of Need.

Conclusions:

The action of the Judgment of Need (JON) as written was not carried out, but appropriate alternative actions were taken. The Original JON called for an engineering analysis to determine if the SEEPEX pump could be safely used following its overtorquing. Instead, DOE determined that the Tank S-102 retrieval work would be done with different equipment and techniques, so the pump was permanently inactivated. This obviated the need for an engineering analysis of the safety of its return to operations. During the initial analysis of the pump overtorquing, CH2M Hill realized that they should have better documented the engineering decisions they made when deciding to use torque beyond the manufacturer's recommendations. This led to the corrective action to issue a Lesson Learned Bulletin regarding the SEEPEX pump overtorquing decisions. The concepts of the Lesson Learned Bulletin are incorporated in procedures, and review of subsequent work packages and interviews with engineering and work planning staff indicate it is institutionalized.

Rating:

Effective

Recommendation for Completion:

None

Suggestions for Continued Improvement:

None

Reviewer:

Earl Hughes, DOE-HQ, Office of Health, Safety and Security

Corrective Action Evaluation Form
Type A JON ENG 4

JON/Finding:
Type A JON ENG-4, The safety basis needs to be changed by CH2M HILL/ORP to require that new primary pressure boundaries for S-102 be classified as Safety Significant. Existing S-102 installed systems, structures, and components need not be upgraded from their current classification, but should be treated nonetheless, to the maximum extent practical, as if they were Safety Significant

Corrective Actions Reviewed:

CHG-ENG-4.1
Conduct a control decision meeting, including CH2M HILL and ORP, to determine a revised control strategy for S-102 leaks (with potential application to other waste transfer leaks). The focus of the control strategy will be leak prevention in preference to leak mitigation. The control decision process will consider the safety designation of new and existing equipment as well as other controls that may be applied to prevent and/or mitigate waste leaks. The new control strategy will comply with existing DOE requirements, including DOE STD 3009 and 10 CFR 830. Based on the outcome of the control decision meeting, CH2M HILL will develop a safety basis amendment for submittal to ORP.

CHG-ENG-4.2
Review and approve submitted safety basis amendment as appropriate

Documents Reviewed:

- Tank Farms DSA, RPP-13033 REV 3
- Tank Farm DSA, RPP-13033 REV 2, ECN 725337 (Safety Significant waste transfer system)
- Tank Farm DSA, RPP-13033 REV 2, ECN 725645 (Waste Leak Evaluation Program)
- Tank Farms TSR, HNF-SD-WM-TSR-006, Rev 6
- Tank Farms TSR, HNF-SD-WM-TSR-006 REV 5, ECN 724337 (Safety Significant waste transfer system)
- Tank Farms TSR, HNF-SD-WM-TSR-006 REV 5, ECN 725645 (Waste Leak Evaluation Program)
- Letter S. J. Olinger to J. C. Fulton, 08-NSD-036, Approval of Safety Basis Amendment-045, For Safety-Significant Designation of Waste Transfer Primary Piping Systems Required by Corrective Action for JON ENG-4.1, dated July 18, 2008
- Klein, K. A., and R. J. Schepens, 2003, "Replacement of Previous Guidance Provided by RL and ORP," (letter 03-ABD-0047/0300642 to E. K. Thomson, Fluor Hanford, Inc., and E. S. Aromi, CH2M HILL Hanford Group, Inc., February 4), U.S. Department of Energy Richland Operations Office, and Office of River Protection, Richland, Washington.
- Interoffice Memo, CH2MHILL, 7G500-LJK-08-001, Control Decision Meetings Summary, January 9, 2008
- Letter J. C. Fulton to S. J. Olinger, CH2M-0800784, Submittal of the Safety Basis Changes for Safety Significant Designation of Waste Transfer Primary Piping Systems Required by the Corrective Action for JON ENG-4.1, March 30, 2008

- Letter J. C. Fulton to S. J. Olinger, CH2M-0800784 R1, Re-Submittal of the Safety Basis Changes for Safety Significant Designation of Waste Transfer Primary Piping Systems Required by the Corrective Action for JON ENG-4.1, July 9, 2008
- TFC-ENG-SB-C-06, Rev F-1, Safety Basis Development, December 21, 2005
- Letter from Klein and Schepens to Thomson and Aromi, 03-ABD-0047, Nuclear Safety Risk Ranking and Control Selection Guidelines, February 04, 2003
- RPP-RPT-32094, *Integrity Assessments for 241-C-108 Waste Retrieval Project.*
- RPP-RPT-34052, *Integrity Assessments for 241-C-109 Waste Retrieval Project.*
- PER CH2M-PER-2007-1740
- E-STARS Report CH2M-PER-2007-1740, CH2M-PER-2007-1740.1
- Causal Analysis for Type A Investigation Action ENG-4
- Letter W. Johnson to S. J. Olinger, WRPS-0900038, Request for Approval of Safety Basis Amendment to Add TSR AC 5.19, "Waste Leak Evaluation Program," dated Jan 22, 2009

Activities/Operations Observed:

None

Interviews:

- Nuclear Safety and Licensing Engineer (3)
- Manager, Nuclear Safety

Results:

A document review of the corrective actions and evidence files indicates adequate completion of the Judgment of Need corrective actions. Follow-up interviews were conducted to assess the effectiveness of the corrective actions.

The corrective actions focused on revising the control strategy for S-102 leaks, particularly waste transfer leaks. The control selection meetings focused on leak prevention vs leak mitigation. Although the hierarchy of control decision preference of preventative controls over mitigative was part of the Tank Farm Safety Basis control strategy prior to the S-102 event, the safety basis controls selected for waste transfer systems did not consistently select preventive and engineering controls in preference to mitigative and administrative controls when applied to new or upgraded equipment.

Safety significant designation of the primary confinement boundary for all tank farm waste transfer systems resulted from the control decision meetings. This included new systems which was the expectation of the JON and grandfather existing systems that conform to the requirements of *Washington Administrative Code* (WAC) 173-303-640, "Tank Systems." TSR level controls were developed to ensure the safety function of waste transfer primary piping systems.

The Tank Farms Safety Basis Amendment (SBA)-045 was approved by ORP nine months ago, on July 18, 2008, but neither the approval letter nor the Safety Evaluation Report (SER) provided implementation direction to the contractor. Although WRPS "expects" to implement the SBA by

September 30, 2009, ORP should provide the TOC a specified date for the implementation of Safety Basis Amendment-045. System integrity assessments and the Independent Qualified Registered Professional Engineer [IQRPE] certification for all systems authorized to transfer waste have been completed.

Additional improvements to the tank farm safety basis documents included updates to reflect current tank farm operations; removal of ambiguities; clarifications to definitions and the development of a TSR Programmatic Administrative Control (AC) for the Waste Leak Evaluation Program to identify and evaluate potential waste leaks or releases from tank farm facilities and operations (approved by ORP on April 20, 2009). The Waste Leak Evaluation Program was developed and implemented following the S-102 event and was submitted for approval as a TSR level programmatic administrative control January 2009. Key elements of the waste leak evaluation program requires the technical evaluations of potential motive forces and leak paths that could result in waste leaks from waste transfer systems and waste releases outside tanks from operations and equipment.

In October 2008, CH2M Hill commenced a Tank Farm DSA/TSR upgrade effort as part of a DSA improvement Plan. The update will implement DOE STD 3009 CN3 and DOE STD 1186 Specific Administrative Controls and involves the revision of the hazard analysis database, implementation of the methods and key elements of the waste leak evaluation program, and the evaluation of controls selection through conducting control decision meetings.

Conclusions:

The corrective actions as approved have been completed for JON ENG 4. The corrective actions have been effective in identifying and addressing weaknesses in the tank farm safety basis document and improving the control strategy. In addition, development and implementation of the Waste Leak Evaluation Program in conjunction with safety significant designation of the primary confinement boundary for all tank farm waste transfer systems and TSR level controls to ensure safety SSC performance are effective in reducing the probability of a leak in the waste transfer system.

Rating:

Effective

Recommendation for Completion:

None

Suggestions for Continued Improvement:

S-JON ENG-4-1
ORP should provide the TOC a specified date for the implementation of Safety Basis Amendment-045.

Reviewer:

Jacquelyn Carrozza, DOE-ID, Nuclear and Safety Performance

Corrective Action Evaluation Form
Type A Jon: EM-1

JON/Finding:
JON/ EM-1 - *Type A Accident Investigation Report* - CH2M HILL needs to analyze events of higher probability but lower consequence in the tank farms emergency planning hazards assessment, covering the full range of possible initiators and severity levels as required by DOE Order 151.1C, Comprehensive Emergency Management System, and it predecessors. Analysis needs to provide adequate documentation of assumptions.

Corrective Actions Reviewed:

CHG-EM-1.1
Type A Accident Investigation Report, Develop a documented process to evaluate the output of PHAs for higher probability, lower consequence hazards (see action CHG-ENG-2.2) in accordance with DOE Order 151.1C, *Comprehensive Emergency Management System*. The process will ensure that AOPs and emergency response procedures adequately address high probably, low consequence events.

CHG-EM-1.2
Type A Accident Investigation Report, Revise TFC-OPS-EP-D-04, Emergency Management Program Assessment Plan Guidance, to incorporate hazard assessment requirements of DOE G 151.1-2, *Technical Planning Basis*.

CHG-EM-1.3
Type A Accident Investigation Report, Issue a lessons learned on potentially inadequate emergency action levels when high probability, lower consequence events are not evaluated.

Documents Reviewed:

- TFC-OPS-EP-D-04, *Emergency Management Program Assessment Plan Guidance*
- TFC-ENG-DESIGN-C-36, *Hazards Assessment Consequence Calculation Process*
- FY2008-CH2M-I-0007, *Corrective Action Plan Implementation for Tank 241-S-102 Waste Spill End Point Assessment*
- FY2008-CH2M-I-0003, *S-102 Midpoint Assessment*
- DOE Order 151.1C, *Comprehensive Emergency Management System*
- DOE G 151.1-2, *Technical Planning Basis*

Activities/Operations Observed:

- April 7, 2009 AP Tank Farm High Efficiency Particulate (HEPA) Filter Failure Drill
- April 7, 2009 Radiological Waste Container Handling Accident Drill
- April 16, 2009 Emergency Preparedness C-110 Tabletop Drill

Interviews:

- IH Technician (2)
- Electrician (3)
- Nuclear Chemical Operator (2)
- Manager, IH Programs
- Manager, Training
- Manager, Security & Emergency Services/Events Investigation
- Manager, Shift Operations
- Manager, Senior Shift
- Coordinator, Emergency Preparedness

Results:

The effectiveness review for JON EM 1 included reviewing the three corrective actions (CA), select aspects of their closure documentation, how the CAs were implemented, and if the corrective actions will be effective in preventing recurrence of the deficiency identified in this JON.

CA-1.1 developed a process to evaluate the output of PHAs for higher probability, lower consequence hazards. This was accomplished by modifying TFC-ENG-DESIGN-C-36, *Hazards Assessment Consequence Calculation Process* to address these issues. This was completed in January 2008. The assessor reviewed the current version of the document (dated November 2008) and verified the changes remained in effect.

CA-1.2 revised TFC-OPS-EP-D-04, *Emergency Management Program Assessment Plan Guidance*, to incorporate hazard assessment requirements of DOE G 151.1-2, *Technical Planning Basis*. This was completed in December 2007. The assessor reviewed the current version of the document (dated January 2009) and verified the changes remained in effect.

CA- 1.3 required the contractor to issue a lessons learned on potentially inadequate emergency action levels when high probability, lower consequence events are not evaluated. This was accomplished in December 2007.

The assessor evaluated several drills involving an IH response and higher probability, lower consequence hazards. The drill provided evidence that the issues from JON EM -1 have been incorporated in the operations of the contractor.

Conclusions:

Closure actions for the S-102 event for Emergency Management have been closed. Closure documentation was found to be adequate, and changes have been effective in enhancing overall improvement in the EM program. The TF contractor has built into AOPs and other documentation the analysis of higher probability, lower consequence hazards and how to address these hazards in an emergency situation. Discussions with Senior Shift Managers and through

the observations of drills the assessors noted that the EM corrective actions have been effective in the areas of support organization response and overall EM program improvement.

Rating:

Effective

Recommendation for Completion:

None

Suggestions for Continued Improvement:

None

Reviewer:

Jack George, DOE-RL, Facility Representative, Program Manager
Courtney Blanchard, DOE-ORP, Facility Representative

Corrective Action Evaluation Form
Type A Jon: EM-2

JON/Finding:
JON/EM-2 - *Type A Accident Investigation Report* - CH2M HILL, Fluor Hanford, and AdvancedMed Hanford need to improve procedures used for responding to abnormal events at tank farm contractor facilities.

Corrective Actions Reviewed:

CHG-EM-2.1
Type A Accident Investigation Report, Issue lessons learned on the importance of complying with procedural direction to call 911 and verify compliance with requirements through completed drills.

FH-EM-2.2
Type A Accident Investigation Report, Conduct an EOC (Extent of Condition) review to determine if FH response procedures ensure: a.) the POC (Patrol Operations Center) is contacted via 911 at an appropriate time; b.) the necessary resources are requested and information is provided to the POD, and c.) the cause of a high radiation area be conservatively assumed to be a release, where appropriate, until determined otherwise.

FH-EM-2.3
Type A Accident Investigation Report, Revise and implement POC QRC (Quick Reaction Checklist) to ensure the crash phone announcement language is appropriate for the level of event.

FH-EM-2.4
Type A Accident Investigation Report, POC QRCs will be reviewed and modified (if required) to ensure adequacy for responding to abnormal events.

FH-EM-2.5
Type A Accident Investigation Report, Update and implement RLEP 2.4 to clarify and streamline notification steps.

AMH-EM-2.6
Type A Accident Investigation Report, Update and implement AMH-ADM-130C, Manager On Call, to ensure medical representation is sent to the site ECT upon notification of its activation.

DOE-EM-2.7
Type A Accident Investigation Report, Provide direction to Hanford Site contractors to review their procedures that direct 911 calls. Ensure calls are made at appropriate times and proper resources are requested.

Documents Reviewed:

- AMH-ADM-130C, revision 1, *Manager On Call,* September 26, 2007
- AMH-ADM-130C, revision 2, *Manager On Call Activation and Response Procedure,* March 27, 2009
- Email, Completion Documentation for AMH-EM-2.6, December 10, 2007
- Email, Please Read Before You Delete, I Acknowledge Reading FY09 AMH-ADM-130C of AMH
- No Notice Drill/Exercise Report, March 12, 2008
- Assessment and Exercise Logs for AMH
- AMH-QA-IA-09-028, Manager On Call Procedure Assessment Report
- AMH-QA-MA-08-056-03, AMH Emergency Preparedness Program Assessment Report
- *Fiscal Year (FY) 2008 Hanford Emergency Readiness Assurance Plan (ERAP) and Continuity Readiness Assurance Report*, dated December 1, 2008
- Hanford Emergency Operations Center, Emergency Plan Implementing Procedure (RLEP) 2.4, *Event Coordination Team*, revisions dated November 20, 2007 and January 22, 2009
- *Precautionary Take Cover Checklist 06-0600*, revisions dated October 10, 2007 and January 8, 2009

Activities/Operations Observed:

- March 10, 2008 Hanford Area Emergency Drill
- April 7, 2009 AP Tank Farm High Efficiency Particulate (HEPA) Filter Failure Drill
- April 7, 2009 Radiological Waste Container Handling Accident Drill

Interviews:

- Director, Emergency Preparedness, Fluor Hanford
- Director, Safeguards, Safeguards and Emergency Preparedness, CH2M HILL Plateau Remediation Project
- Manager, AMH Performance Assurance
- Manager, Contractor Support, Fluor Hanford Emergency Management
- Manager, Site Emergency Preparedness Program, Fluor Hanford Emergency Management
- Project Engineer, Security and Emergency Services Division, U.S. Department of Energy, Richland Operations Office

Results:

The document review and interviews of the corrective actions task associated with both AdvanceMed Hanford (AMH) and the Fluor Hanford (FH) Emergency Preparedness organizations supporting this JON were complete, effective, and sustainable.

Since the completion of the initial corrective action task, AMH has performed numerous assessments and has participated in three site exercises. The assessment and exercises have led to the identification of several continued improvement items. The most recent improvement has

integrated the Manager On Call (MOC) improvement with the Medical Provider On Call (MPOC) process to include not only exercise response but actual emergency event response. The AMH procedure change and corrective action management process are being utilized to complete the improvement to ensure that both the MOC and MPOC support the Event Coordination Team (ECT) and Emergency Operations Center (EOC) as required by the corrective action task.

Likewise, continuing field exercises coordinated by the FH Emergency Preparedness organization have demonstrated ongoing efficacy of corrective actions relating to take cover actions, response to abnormal events through implementation of Quick Reaction Checklists, and streamlining of notification communications. Corrective actions relevant to communication via the "crash phones" have been carried over to the Hanford Site Emergency Alerting System that is now in effect. Specifically, take cover actions continue to be implemented via the 'Precautionary Take Cover Checklist 06-0600'.

At the time of contractor transition in October 2008, almost all FH-managed hazardous facilities were transferred over to the CH2M HILL Plateau Remediation Corporation. Corrective actions for the associated emergency response procedures of these facilities remain intact for clear instructions to call 911, information necessary to report to the Patrol Operations Center, and identification of necessary services or actions to be requested from the Patrol Operations Center. There have been no additional hazardous facilities identified that would require implementation of the corrective actions.

DOE provided direction to Hanford contractors to review their procedures regarding 911 calls to ensure calls were made at the appropriate times and proper resources were requested. Each contractor provided its review results and copies of procedure changes where appropriate to ensure that 911 was called in appropriate circumstances, necessary resources were requested, and information was provided to the Patrol Operations Center. Effectiveness was observed by the assessor during observing the March 10, 2008 Hanford Area Emergency Drill, the April 7, 2009 AP Tank Farm High Efficiency Particulate (HEPA) Filter Failure Drill, and April 7, 2009 Radiological Waste Container Handling Accident Drill. In these drills the Building Emergency Director gave direction to the Incident Command Post (ICP) Communicator to make the appropriate 911 call. Effectiveness will continue to be determined in future quarterly exercises and drills.

Conclusions:

The AdvancedMed Hanford and Fluor Hanford Emergency Preparedness organizations have improved the procedures used for responding to abnormal events at tank farm contractor facilities. The relevant procedure changes remain intact, and met the requirements of this JON.

Rating:

Effective

Recommendation for Completion:

None

Suggestions for Continued Improvement:

None

Reviewers:

Jack George, DOE-RL, Facility Representative, Program Manager
Courtney Blanchard, DOE-ORP, Facility Representative
Mike Flasch, WRPS, Quality Assurance Engineer
Mike Silvia, WRPS

Corrective Action Evaluation Form
Type A Jon: EM-3

JON/Finding:
JON/ EM-3 - *Type A Accident Investigation Report* - CH2M HILL and Fluor Hanford need to correct weaknesses and inconsistencies in the implementation of take cover protective actions.

Corrective Actions Reviewed:

FH-EM-3.1
Type A Accident Investigation Report, Revise and implement applicable DOE-0223 (Site-wide emergency response procedures) to include steps to evaluate the need for continued protective actions, provide criteria and processes to relax protective actions if conditions warrant, and provide appropriate information to those who may contact the ICP for direction.

FH-EM-3.2
Type A Accident Investigation Report, Revise and implement associated emergency response organization training lesson plans.

FH-EM-3.3
Type A Accident Investigation Report, Identify and train emergency response organization members impacted by the procedure changes.

FH-EM-3.4
Type A Accident Investigation Report, Revise HGET to provide additional information to ensure the desired actions are taken during take cover conditions.

FH-EM-3.5
Type A Accident Investigation Report, Develop and distribute a just-in-time bulletin to communicate the lessons learned addressing take cover actions.

FH-EM-3.6
Type A Accident Investigation Report, Provide written instruction to Hanford Patrol and ECT/EOC regarding instructions to give employees during a take cover event.

FH-EM-3.7
Type A Accident Investigation Report, Revise and implement POC QRC to identify access control points for take cover areas.

FH-EM-3.8
Type A Accident Investigation Report, Perform an effectiveness review of JON EM-2 and EM-3 corrective actions.

FH-EM-3.9
Type A Accident Investigation Report, Conduct a drill, or series of drills, to verify effectiveness of Actions FH-EM-2.5, AMH-EM-2.6, FH-EM-3.1, FH-EM-3.6, FH-EM-3.7, and AMH-HE-2.12.

Documents Reviewed:

- *Fiscal Year (FY) 2008 Hanford Emergency Readiness Assurance Plan (ERAP) and Continuity Readiness Assurance Report*, dated December 1, 2008
- *Precautionary Take Cover Checklist 06-0600*, revisions dated October 10, 2007 and January 8, 2009
- Hanford Emergency Operations Center, Emergency Plan Implementing Procedure (RLEP) 1.1, *Recognizing and Classifying Emergencies*, revisions 17 dated January 14, 2008 and 19 dated June 5, 2008
- Hanford Emergency Operations Center, Emergency Plan Implementing Procedure (RLEP) 2.3.22, *Site Emergency Director*, revisions 15 dated January 14, 2008 and 17 dated January 7, 2009
- Hanford Emergency Operations Center, Emergency Plan Implementing Procedure (RLEP) 2.3.34, *Consequence Assessment Director*, revisions 11 dated January 14, 2008 and 12 dated February 28, 2008
- Hanford Emergency Operations Center, Emergency Plan Implementing Procedure (RLEP) 2.3.39, *UDAC Assessment Manager*, revisions 14 dated January 14, 2008 and 15 dated February 28, 2008
- Hanford Emergency Operations Center, Emergency Plan Implementing Procedure (RLEP) 3.11, *Exercise and Emergency Response Evaluations*, revision7
- *Precautionary Take Cover Checklist 06-0600*, revisions dated October 10, 2007 and January 8, 2009
- *Hanford Fiscal Year (FY) 2008 Second Quarter Limited Exercise Evaluation*, dated April 2008
- *Hanford 2008 Field Exercise Evaluation*, dated July 28, 2008

Activities/Operations Observed:

- March 10, 2008 Hanford Area Emergency Drill
- April 7, 2009 AP Tank Farm High Efficiency Particulate (HEPA) Filter Failure Drill
- April 7, 2009 Radiological Waste Container Handling Accident Drill

Interviews:

- Director, Emergency Preparedness, Fluor Hanford
- Manager, Contractor Support, Fluor Hanford Emergency Management
- Manager, Site Emergency Preparedness Program, Fluor Hanford Emergency Management
- Project Engineer, Security and Emergency Services Division, U.S. Department of Energy, Richland Operations Office
- Specialist, Emergency Preparedness (2)

Results:

The take cover corrective actions associated with the Fluor Hanford (FH) Emergency Preparedness organization supporting this JON were complete, effective and sustainable.

Corrective actions implemented in response to two take cover issues identified during the fiscal year (FY) 2008 second quarter limited exercise evaluation in April 2008 were completed in November 2008 (300 Area Emergency Alerting System siren activation) and April 2009 (PNNL personnel having received incorrect approval to eat and drink during a take cover scenario), respectively. Take cover coordination and direction were observed as effectively implemented due to an absence of issues identified during subsequent site and Tank Farm drill evaluations.

Training materials developed for presentation to Emergency Response Organization personnel were effective in identifying and communicating procedure changes developed to improve take cover coordination actions. All relevant Emergency Response Organization personnel have completed the training. In addition the Hanford General Employee Training (HGET) emergency preparedness module has been upgraded to emphasize the Hanford site take cover response expectations.

The Emergency Plan Implementing Procedures that were revised to support corrective action implementation were reviewed to ensure that the relevant procedure contents were not altered during subsequent revisions; confirmation was achieved that the necessary procedure contents remain intact.

Confirmation was achieved that the series of contractor transitions in October 2008 did not adversely impact the ability of the Fluor Hanford Emergency Preparedness organization to coordinate site emergency response activities, or the ability of the Hanford Patrol organization to support emergency response conditions. The present Hanford contractors are positioned to respond effectively to emergency response conditions.

Conclusions:

The Fluor Hanford Emergency Preparedness organization has improved the procedures and processes implemented in response to 'take cover' scenarios. The relevant procedure changes remain intact, and met the requirements of this JON.

Rating:

Effective

Recommendation for Completion:

None

Suggestions for Continued Improvement:

None

Reviewer:

Mike Flasch, WRPS, Quality Assurance Engineer
Jack George, DOE-RL, Facility Representative, Program Manager

Corrective Action Evaluation Form
Type A JON: HE-1

JON/Finding:
JON/ HE-1 - *Type A Accident Investigation Report* - CH2M HILL needs to integrate industrial hygiene into responding to abnormal events which may involve a chemical release. In addition, CH2M HILL needs to establish and implement industrial hygiene procedures, sampling and monitoring protocols, and training of industrial hygiene staff for responding to the range of abnormal events identified in Tank Farm Hazard Analysis Documents.

Corrective Actions Reviewed:

CHG-HE-1.1
Type A Accident Investigation Report, Prepare training for shift managers, workers, and their supervisors on industrial hygiene role in response to abnormal events and shift manager responsibilities in initiating effective event response.

CHG-HE-1.2
Type A Accident Investigation Report, Conduct training for shift managers, workers, and their supervisors on industrial hygiene role in response to abnormal events and shift manager responsibilities in initiating effective event response.

CHG-HE-1.3
Type A Accident Investigation Report, Update tank farms chemical hazard reference and information materials to assist the shift manager in making decisions regarding response to chemical incidents.

CHG-HE-1.4
Type A Accident Investigation Report, Implement tank farms chemical hazard reference and information materials per CHG-HE-1.3, in shift offices.

CHG-HE-1.5
Type A Accident Investigation Report, Conduct training for industrial hygienists and technicians on response to abnormal events per the AOPs.

CHG-HE-1.6
Type A Accident Investigation Report, Enhance and implement industrial hygiene monitoring for waste transfer during abnormal events.

CHG-HE-1.7
Type A Accident Investigation Report, Conduct training for industrial hygienists, industrial safety professionals, field work supervisors, procedure writers, work planners, and operations managers on expectations for use of job hazard analysis processes, including the worksite hazard analysis, as part of the development, maintenance, and use of technical procedures and work instructions.

Documents Reviewed:

- Training Activity TO7043 - *IH Role in Abnormal Events*
- Training Activity TA-07041 - *Job Hazard Analysis Process*
- Training Activity TA-08041- *EM - Identification of Exposed Personnel*
- Training Activity TO801 8 - *Case Manager Coordination w/AMH*
- Training Activity TO7044 - *Tank Farm Vapor Information Sheet*
- Training Activity TO8028 - *IH Sampling for Waste Transfer/Retrieval for Potential Abnormal Events*
- Training Activity - *Dose Reconstruction IH Sampling for Waste Transfer Abnormal Events*
- Training Course 357103 - *Cycle* 3 *Industrial Health Technician Continuing Training*
- TF-AOP-003, *Response to Elevated Airborne Radioactivity, Rev.* B- 7
- TF-AOP-0 11, *Response to Chemical and/or Radiological Events, Rev. C-1*
- TF-AOP-015, *Response to Reported Odors or Unexpected Changes to Vapor Conditions, Rev. B-18*
- TF-AOP-018, *Response to Electrical, Water, Air, or Pressurized Gas Cylinders High Energy Release, Rev.* B-2
- TFC-ESHQ-S-CMLI-C-0 1, *Injury and Illness Recordkeeping, Rev. C-2*
- TFC-ESHQ-S - CMLI-C-02, *Injury and Illness Events, Rev.* B-2
- TFC-ESHQ-S CMLI-CD-03, *Workers Compensation Program, Rev. C*
- TFC-OPS-OPER-CD-01, *Event Notification, Rev. A*
- TFC-ESHQ-S IH-C-46, *IH Reporting and Records Management, Rev. B-1*
- Standing Order CO-07-009, *Industrial Hygiene Dose Reconstruction Sampling for Waste Transfer and Retrievals*
- Standing Order WFO-07-006, *Industrial Hygiene Dose Reconstruction Sampling for Waste Transfer and Retrievals*
- *Shift Office On-Call List,* RPP-IP-0732, release 135

Activities/Operations Observed:

- April 7, 2009 AP Tank Farm High Efficiency Particulate (HEPA) Filter Failure Drill
- April 7, 2009 Radiological Waste Container Handling Accident Drill
- April 16, 2009 Emergency Preparedness C-110 Tabletop Drill

Interviews:

- Manager, IH Programs
- Manager, Training
- Manager, Security & Emergency Services/Events Investigation
- Manager, Shift Operations
- Manager, Senior Shift
- Coordinator, Emergency Preparedness

Results:

The effectiveness review for JON HE 1 included reviewing the seven corrective actions (CA), select aspects of their closure documentation, how the CAs were implemented, and if the corrective actions will be effective in preventing reoccurrence of the deficiency identified in this JON. The CAs 1.1, 1.2, 1.5, and 1.7 pertained to training deficiencies mostly in the area of Industrial Hygiene engagement during the S-102 response. Corrective Actions 1.3, 1.4, and 1.6 address enhancements needed for the shift manager's to integrate industrial hygiene into responding to abnormal events which may involve a chemical release.

The Tank Farm contractor used an activity tracking information sheet to systematically analyze the training requirements and to ensure the appropriate personnel were trained. The assessor identified that the personnel identified for this training captured the audience required by these CAs and an exam was administered to verify proficiency. The training covered industrial hygiene's role and what actions were to be taken by personnel, including the shift manager(s), in responding to abnormal events. The activity tracking information sheet No. T07043 was closed on 12/11/07 and training material was included in the evidence package for this corrective action. This training was required for Shift Managers, NCOs, IHTs, HPTs, PICs, OEs, SOE, Maintenance Craft for Waste Feed Operations, Closure Operations, and the Sampling Organization of Analytical Technical Services (ATS). In addition to this training, WRPS made a decision to train IH and IHT in ERO, which was completed. The deliverable for this action was completion of training for 90% of the target audience, which was verified completed.

Prior to the July 27, 2007 S-102 event, Senior Shift Managers referenced the tank vapor information sheet (TVIS) during a tank farm chemical incident. There were 18 different TVIS for all of the tank farms. These TVIS did not readily assist the shift managers in making decisions regarding response to chemical incidents as identified in this JON. To address the deficiency, a tank farm chemical vapor information summary was developed for the A, B, S, and T Complex and the C and U Tank Farms. The tank farm chemical vapor information summary included the chemicals of concern with their respective action limits, odor thresholds, and acute symptoms of over exposure for each area. This document also referenced the safety and health contacts and what actions to take if exposure to tank waste occurred. A briefing was held to discuss the information presented on the summary sheet. Those in attendance included Tank Farms managers, health physics technicians, industrial hygiene technicians, operators, maintenance, and field work personnel. A written knowledge check was given to all attendees. Attendance rosters were provided in the evidence package. Training for the IHs and IHTs was made part of the continuing training, as indicated in the Training Activity Sheet for course number 357103, Rev #1, which was included in the evidence package. The list of IHs and IHTs who attended the training was also included in the evidence package.

The assessor reviewed documentation at the shift office to ensure IHT engagement was integrated into Abnormal Operating Procedures (AOP) and discussed IHT involvement with IH Program, Shift Operations, and Senior Shift Managers. The Shift Manager recited the tank farms vapor information sheet content, knew exactly where they were located in his office, and appropriately explained when he used them. The IH Program, Training, and Shift Operations Managers independently explained that a significant deficiency in the S-102 event response was

not engaging IHTs, rather than IHTs performance. The IH Program Manager stated that WRPS management had made a decision to have ERO training assigned for IHs and IHTs. This ERO training was completed. The IH Program, Training, Shift Operations, and Senior Shift Managers stated that IH involvement in emergency and operational responses will initially parallel the radiological response. Reviewing the AOPs identified that IH involvement commenced with the radiological response.

The assessors observed the April 7, 2009 AP Tank Farm High Efficiency Particulate (HEPA) Filter Failure Drill and April 7, 2009 Radiological Waste Container Handling Accident Drill at the 222S Laboratory. During both drills the IH and radiological engagement occurred during the initial response to the event. The HEPA Filter Drill required IH to set-up and perform vapor samples where the Waste Container Handling Accident Drill required no IH sampling. However, the Chemical Hazards Assessor during the Waste Container Handling Accident Drill did address the potential chemical exposure hazard in a timely fashion. For this drill scenario no chemical hazard exposure existed. The assessor noted that for both accident scenarios a hazardous chemical aspect to the event would have increased and demonstrated proficiency in addressing a more significant IH event.

Conclusions:

Closure actions for the S-102 event for Industrial Safety and Hygiene have been completed. Closure documentation was found to be adequate, and changes have been affective in enhancing overall improvement in the IH program. The TF contractor has built into AOPs, and other documentation, the need to engage IH support during operational and emergency responses. The assessors noted that the Industrial Safety and Hygiene corrective actions have been effective in the areas of support for organization response and overall IH program improvement though discussions with management and the observations of drills.

Rating:

Effective

Recommendation for Completion:

None

Suggestions for Continued Improvement:

S-HE-1-1
WRPS should revise drill scenarios to include a chemical attribute that requires more in-depth IH response which may include a worker(s) in contact with tank waste, chemical spill, vapor event, etc.

Reviewer:

Courtney Blanchard, DOE-ORP, Facility Representative

Corrective Action Evaluation Form
Type A JON HE-2

JON/Finding:
JON/HE-2 - *Type A Accident Investigation Report* - The Hanford Fire Department, managed by Fluor Hanford, needs to improve its emergency medical technicians/paramedics performance in the areas of improved documentation of patient encounters and communications with AdvanceMed Hanford; more frequent reviews of records by physicians is one needed element in the efforts to enhance documentation of patient encounters.

Corrective Actions Reviewed:

HE-2
Type A Accident Investigation Report, Conduct an extent of condition (EOC) review.

FH-HE-2.1
Type A Accident Investigation Report, Work with AdvanceMed Hanford to create a form specific for after care instructions following a work place injury, exposure, or potential exposure that requires the employee to report to the contractor's OMSP.

FH-HE-2.2
Type A Accident Investigation Report, Revise Standard Operating Guideline 2.B.4, Revision 0, Ambulance Responses, to eliminate references to the patient contact information form.

FH-HE-2.3
Type A Accident Investigation Report, Revise Standard Operating Guideline 3.A.9, Revision 0, Response To Radiologically Posted Areas, to include the notification of the contractor's OMSP physician on call for chemical and radiological material exposures. The names of employees required to report to the OMSP will be provided to the OMSP for follow-up.

FH-HE-2.4
Type A Accident Investigation Report, Cancel Standard Operating Guideline 3.A.12, Revision 0, Patient Contact Information Form Use.

FH-HE-2.5
Type A Accident Investigation Report, Train personnel to the revised Standard Operating Guidelines 2.B.4 and 3.A.9, the new procedure developed in Action FH-HE-2.10, and the new after care instruction form developed in Action FH-HE-2.1.

FH-HE-2.6
Type A Accident Investigation Report, Invite the Benton County Medical Program Director to the Hanford Fire Department monthly emergency medical services meetings.

FH-HE-2.7
Type A Accident Investigation Report, Provide "Emergency Medical Response To Hazardous Materials" refresher training to paramedics.

FH-HE-2.8
Type A Accident Investigation Report, Provide "Hazardous Material Awareness and Operations" refresher training to paramedics and emergency medical technicians.

FH-HE-2.9
Type A Accident Investigation Report, Communicate expectations that the patient care report will be completed to provide adequate information using the subjective, objective, assessment, plan format so that this information can be provided to the contractor's OMSP.

FH-HE-2.10
Type A Accident Investigation Report, Develop and implement a new procedure that will ensure that the contractor's OMSP is informed when employees are involved in actual or potential chemical and radiological material exposures.

FH-HE-2.11
Type A Accident Investigation Report, Perform an effectiveness review of corrective actions.

AMH-HE-2.12
Type A Accident Investigation Report, Update and implement AMH-CS-385B, *On-Call Medical Response to Site Emergencies Policy* and AMH-CS-385C, *On-Call Medical Response to Site Emergencies* procedure to ensure the HFD/AMH notification process for potential chemical exposures is effective.

Documents Reviewed:

- Standard Operating Guideline 3.A.9, Revision 0, *Response To Radiologically Posted Areas*
- Standard Operating Guideline 3.A.12, Revision 0, *Patient Contact Information Form Use*
- AMH-CS-385B, *On-Call Medical Response to Site Emergencies Policy, May 29, 2008*
- AMH-CS-385C, *On-Call Medical Response to Site Emergencies, May 28, 2008*
- No Notice Drill/Exercise Report, March 12, 2008
- Email, Quarterly Meetings of AMH SOMD with HFD/FH
- Email, FOH Recommendations from April Visit – AMH's Compliance and Completion of Documentation AMH-HE-2.12 and 08-SES-002-02
- Email, AMH-CS-385C – On Call Medical response to Site Emergencies Policy.doc,
- AMH-CS-385C On Call Medical Response to Site Emergencies Procedure.doc
- EMS Community Meetings - List of Meetings involving SOMD, HFD and Tri-Cities Community Emergency Medical Coordinator
- Site Form BC-6004-463, *Hanford Fire Department – Workplace Injury/Exposure After-Care Instructions*, revision 1
- Hanford Fire Department Standard Operating Guideline 2.B.4, *Ambulance Responses*, revision 1 dated October 29, 2007 (not revised since revision 1)

- Hanford Fire Department Standard Operating Guideline 3.A.9, *Responses to Radiologically Posted Areas*, revision 0 and revision 1 dated October 29, 2007
- Hanford Fire Department Standard Operating Guideline 3.A.15, *Treatment and Documentation of Workplace Injuries/Exposures*, revision 0 dated October 29, 2007
- Minutes – Mid Columbia EMS & Trauma Council, February 2 and March 2, 2009
- *Fiscal Year (FY) 2008 Hanford Emergency Readiness Assurance Plan (ERAP) and Continuity Readiness Assurance Report*, dated December 1, 2008
- *Hanford Fiscal Year (FY) 2008 Second Quarter Limited Exercise Evaluation*, dated April 2008
- *Hanford 2008 Field Exercise Evaluation*, dated July 28, 2008

Activities/Operations Observed:

None

Interviews:

- Chief, Hanford Fire Department
- Training and Medical Services Officer, Hanford Fire Department
- Secretary, Hanford Fire Department
- Manager, AMH Performance Assurance
- Specialist, Emergency Preparedness (2)

Results:

The document review and interviews of the corrective actions task associated with both AdvancedMed Hanford (AMH) and the Fluor Hanford (FH) Fire Department organizations supporting this JON were complete, effective and sustainable.

The meetings are scheduled by the FH Fire Department administrative staff. AMH has participated in the meetings and since 2007, with seven meetings held. The requirement to attend these meetings is listed in the procedure.

Improved documentation of patient encounters and communications with AMH has been effectively implemented through specific documented expectations such as the following:

- After care activities following a work place injury, exposure or potential exposure that requires the employee to report to the contractor's On-site Medical Service Provider (OMSP))
- Ambulance response
- Notification of the contractor's OMSP physician for chemical and radiological material exposures

The FH Fire Department Standard Operating Guidelines (SOG) that were revised to support corrective action implementation were reviewed to ensure that the relevant Guideline contents were not altered during subsequent revisions; confirmation was achieved that the necessary SOG

contents remain intact. Where necessary, new forms generated to support corrective actions have been entered into the 'site forms' web page to provide configuration control.

Corrective actions that were implemented to train personnel to the SOG changes were verified to encompass all of the relevant personnel; also, the training materials provided in-depth information to ensure information transfer. Personnel who had not participated in the training activities prior to closure of the corrective action task were verified to have subsequently completed the training.

A corrective action to "Invite the Benton County Medical Program Director to the Hanford Fire Department Monthly Emergency Medical Services Meetings" was observed to be implemented effectively. Following formal invitation to participate in these meetings on October 22, 2007, review of several recent meeting minutes for the Mid-Columbia EMS & Trauma Council confirmed relevant participation.

Recent emergency preparedness exercises have not indentified any adverse performance issues by the emergency medical technicians/paramedics in event response.

Conclusions:

The Hanford Fire Department has improved its emergency medical technicians/paramedics performance in the areas of improved documentation of patient encounters and communications with AdvanceMed Hanford. The Hanford Fire Department updated their Standing Operating Guidelines, met with AMH and Benton County to resolve these issues. Then they trained their employees on the updated processes. Reviews of the Standing Operating Guidelines and interviews with Fire Department and AMH have verified that these actions are effective.

Rating:

Effective

Recommendations for Completion:

None

Suggestions for Continued Improvement:

None

Reviewers:

Mike Flasch, WRPS; Quality Assurance Engineer
Mike Silvia, WRPS;
Jack George, DOE-RL, Facility Representative, Program Manager

Corrective Action Evaluation Form
Type A JON HE-3

JON/Finding:
JON/HE-3 - *Type A Accident Investigation Report* - CH2M HILL, Fluor Hanford, and AdvanceMed Hanford need to improve medical monitoring, documentation, and accountability of individuals with health symptoms and/or complaints following an accident.

Corrective Actions Reviewed:

CHG-HE-3.1
Type A Accident Investigation Report, Train response personnel and appropriate operations and programs managers on the personnel identification process.

CHG-HE-3.2
Type A Accident Investigation Report, Revise and implement procedures as necessary to ensure appropriate case management of exposed personnel and coordination with AMH.

CHG-HE-3.3
Type A Accident Investigation Report, Provide medical surveillance for workers potentially affected by the S-102 spill through the case management process to ensure that follow-on testing and consultation is completed on schedule per recommendations of Health Effects Report RPP-RPT-34902.

FH-HE-3.4
Type A Accident Investigation Report, Revise HNF-PRO-077, Reporting, Investigating, and Managing Health, Safety, and Property/Vehicle Events, to clarify that employees involved in events with potential exposures are required to report to the contractor's Occupational Medical Service Provider (OMSP) for evaluation and follow-up, and that managers of the potentially affected employees require the employees to report to the OMSP.

FH-HE-3.5
Type A Accident Investigation Report, Issue a safety bulletin (contextually explaining the requirements and reasoning for reporting to OMSP and explaining the changes to HNF-PRO-077 and to the Hanford Fire Department's process for potential exposures) to disseminate the information to employees and managers.

FH-HE-3.6
Type A Accident Investigation Report, Perform an effectiveness review of corrective actions.

FH-HE-3.7
Type A Accident Investigation Report, Develop a Site-wide process to make contact with those potentially exposed to chemical or radiological hazards away from an event scene, and provide medical evaluation and follow-up as needed.

AMH-HE-3.8
Type A Accident Investigation Report, Update AMH-CSS-326C, *Patient Results Notification* procedure to ensure consistency in the notification process.

AMH-HE-3.9
Type A Accident Investigation Report, Review existing laboratory tests against suggested changes recommended in the Cohort Medical Monitoring Report and update documents as appropriate.

AMH-HE-3.10
Type A Accident Investigation Report, Update AMH-CS-140A, *Case Management Plan* and implementing documents to reflect necessary changes for the medical monitoring process.

AMH-HE-3.11
Type A Accident Investigation Report, Provide training of new/revised procedures to staff.

AMH-HE-3.12
Type A Accident Investigation Report, Develop and implement event exposure tracking database.

DOE-HE-3.13
Type A Accident Investigation Report, Provide direction to Hanford Site contractors to review/revise their procedures, ensuring that all employees involved in potential exposure events are required to report to the contractor's OMSP for evaluation.

DOE-HE-3.14
Type A Accident Investigation Report, Perform an independent assessment of the effectiveness of AMH's corrective actions. This review should also examine the level and effectiveness of RL oversight of AMH. The review will be performed either by RL staff independent of line management responsible for AMH, or an external reviewer such as the U. S. Public Health Service.

Documents Reviewed:

- Health Effects Report RPP-RPT-34902
- HNF-PRO-077, *Reporting, Investigating, and Managing Health, Safety, and Property/Vehicle Events*
- AMH-CSS-326C, rev 2, *Patient Results Notification Procedure,* June 17, 2008
- Email, Post-Exposure Lab Appt-CAP Validation
- Assessment and Exercise Logs for AMH
- AMH-QA-09-004 Re-Measure-Follow up to Exposure CAP, October 28, 2008
- Training Roster for new and revised procedures under the Type CAP AMH-HE-3.11
- Memo: Exposure Protocols, December 19, 2007
- *(EXP) Exposure and Unusual Event Service*, July 21, 2008
- *(EXREV) Exposure and Unusual Event – Review of Lab Results*, July 21, 2008
- *(EXP1/EXP2/EXP3) Exposure and Unusual Event Follow Up Monitoring*, July 21, 2008
- *(EXP1/EXP2/EXP3) Exposure and Unusual Event Follow Up Monitoring*, April 15, 2009
- AMH-CS-140A, Rev 4, *Case Management Plan,* December 12, 2007
- AMH-CS-143C, rev 1, *Exposure Procedure*, December 20, 2007

- AMH-CS-143C, rev 1, *Exposure Procedure*, October 29, 2008
- *(CARPV) Previous Carcinogen Exposure Program*, June 2, 2008
- *Case Management End of Day Tracking* Desk Instruction, December 31, 2008
- *Daily Updates to Case Management File* Desk Instruction, March 16, 2009
- *Generate New Case Management Patient File* Desk Instruction, March 18, 2009
- *Work Suitability Evaluation (WSE)* Desk Instruction, October 7, 2008
- *Exposure Patient Tracking* Desk Instruction, February 3, 2009
- Staff Meeting Agenda, Procedure Training for Type A CAP
- *Tracking Group Exposure (TGE) Systems Design Description*, Revision 1.1, December 11, 2007
- NRSCM022 – Exposure Results Pending Report (7 days or greater), April 9, 2009
- TFC-ESHQ-S_CMLI-C-02, *Illness and Injury Event*
- TRF-ERP-013, *Emergency Response Procedure 013 Tank Farm Worker Emergency Response*
- TFC-ESHQ-S_CMLI-C-0, *Injury and Illness Recordkeeping*

Activities/Operations Observed:

- April 7, 2009 AP Tank Farm High Efficiency Particulate (HEPA) Filter Failure Drill
- April 7, 2009 Radiological Waste Container Handling Accident Drill
- April 16, 2009 Emergency Preparedness C-110 Tabletop Drill

Interviews:

- IH Technician (2)
- Electrician (3)
- Nuclear Chemical Operator (2)
- Manager, IH Programs
- Manager, Training
- Manager, Security & Emergency Services/Events Investigation
- Manager, Shift Operations
- Manager, Senior Shift
- Coordinator, Emergency Preparedness
- Manager, AMH Performance Assurance
- Team Lead, AMH Special Projects
- Manager, AMH Case Management
- DOE Facility Representative, ORP
- HAMTC Safety Representative
- Director, Emergency Preparedness, Fluor Hanford
- Manager, Contractor Support, Fluor Hanford Emergency Management
- Manager, Site Emergency Preparedness Program, Fluor Hanford Emergency Management
- Project Engineer, Security and Emergency Services Division, U.S. Department of Energy, Richland Operations Office
- Specialist, Emergency Preparedness (2)

Results:

The document review and interviews of the corrective actions tasks associated with AdvancedMed Hanford supporting this JON were complete, effective and sustainable. AMH has conducted an assessment regarding exposure notifications. A second assessment is scheduled for August 2009. The results show consistency for mailings to be at 86% and follow ups at 55%. Expectations are that improvements will generate increased percentages. The exposure process protocols have been updated for improved notifications. Case management policy and procedure have been updated and are being maintained. The training on the seven new/modified procedures was completed and documented. The training was part of a staff meeting while the performance demonstrations included assessments and participation and verification as part of three site exercises. The process for communicating the most recent changes relies on required reading email notifications and voting button replies.

DOE provided direction to Hanford contractors to review and revise as necessary procedures ensuring that all employees involved in potential exposure events were required to report to the contractor's occupational medical services provider for evaluation as soon as possible, but no later than their next return to work. DOE then validated that all Hanford contractors put this provision in their procedures and that the procedures flowed down to subcontractors. DOE reviewed Bechtel National Inc., Advanced Technologies and Laboratories, CH2M Hill, Fluor Hanford, Washington Closure Hanford, Washington River Protection Solution, and AdvanceMed Hanford as well as a sampling, of subcontracts from each of the RL/ORP contractors for compliance with this requirement. The assessor reviewed Washington River Protection Solution, Procedure TFC-ESHQ-S_CMLI-C-02, Illness and Injury Event, Section 3.2.1.2 that required employee to report to an Onsite Medical Provider (OSMP) Health Care Center for evaluation as soon as possible but no later than the next scheduled shift under the following circumstances:

- When the employee has been instructed to do so by the Hanford Fire Department
- When instructed to do so by management
- When the employee has incurred an occupational injury not meeting self-treat criteria
- When the employee has incurred a chemical exposure
- When the employee has incurred a potential chemical exposure.

There were no issues identified and all of the procedures clearly required any employee involved in a potential exposure event to report to the contractors' OMSP for evaluation. The Federal Occupational Help Services, a division of the Department of Human and Health Services, performed an assessment to validate the effectiveness of AMH's corrective actions. The organization was scheduled to continue assessments of AMH biannually. The assessments have found AMH's corrective actions to be completed and effective.

The procedures that were revised to support corrective action implementation were reviewed to ensure that the relevant procedure contents were not altered during subsequent revisions. Confirmation was achieved that the necessary contents remain intact.

An extensive effectiveness review of corrective actions for this JON performed in March/April 2008 concluded that implementation of the corrective actions were effective in reducing the probability of recurrence and the corrective actions directly addressed the S-102 event root causes that were identified in the JON causal analysis.

Conclusions:

Procedures and processes to provide medical monitoring, documentation, and accountability of individuals with health symptoms and/or complaints following an accident have been implemented effectively. The document review and interviews have shown that the corrective actions task associated with both AdvancedMed Hanford (AMH) and the Fluor Hanford (FH) Emergency Preparedness organizations supporting this JON were complete, effective, and sustainable.

Rating:

Effective

Recommendation for Completion:

None

Suggestions for Continued Improvement:

None

Reviewers:

- Jack George, DOE-RL, Facility Representative, Program Manager
- Courtney Blanchard, DOE-ORP, Facility Representative
- Mike Flasch, WRPS, Quality Assurance Engineer
- Mike Silvia, WRPS

Corrective Action Evaluation Form
Type A WC-1

JON/Finding:
Type A WC-1,CH2M HILL management needs to define and implement an effective method for identifying Tank Farm small quantity waste leaks.

Corrective Actions Reviewed:

CHG-WC-1.1
Develop requirements, assess technology and test selected system(s) to identify small quantity waste leaks.

CHG-WC-1.2
Install enhanced system(s) to identify small quantity waste leaks.

CHG-WC-1.3
Publish an illumination/lighting standard that implements the HAZWOPER lighting requirements.

CHG-WC-1.4
Implement illumination/lighting standard developed in CHG-WC-1.3.

Documents Reviewed:

- RPP-36115, *Remote Area Radiation Monitoring Alternatives Analysis*, Rev 0
- RPP-36117, *Remote Area Radiation Monitoring Functional Design Requirements*, Rev 0
- RPP-SPEC-36575, *Waste Retrieval Remote Monitoring Camera (WRRMCAM) System Requirement Specification*, Rev 0
- RPP-36590, *Waste Retrieval Remote Monitoring Camera System – Alternatives Analysis*, Rev 0
- RPP-PLAN-36598, *Waste Retrieval Remote Monitoring Camera System – Test Plan*, Rev 0
- RPP-RPT-37586, *Remote Area Radiation Monitoring (RARM) Preliminary System Functional Test Report*, Rev 0
- RPP-SPEC-25400, *Procurement Specification for Remote Area Radiation Monitoring (RARM) System*, Rev 3
- RPP-RPT-36766, *Waste Retrieval Remote Monitoring Camera System Test Report*, Rev 0
- Lockheed Martin *Test Plan and Test Evaluation Report WRRMCAM Factory Acceptance Test – Unit #1*
- RARM-PTSD-001, *Project Turnover Scoping Document for Remote Area Radiation Monitoring (RARM) Equipment*, Rev 0
- WRRMCAM-PTSD-001, *Project Turnover Scoping Document for Waste Retrieval Monitoring Camera (WRRMCAM) System*, Rev 0
- WRRMCAM-PTD-001, *Project Turnover Document for Waste Retrieval Monitoring Camera (WRRMCAM) System*, Rev 0

- RARM-PTD-001, *Project Turnover Document for Remote Area Radiation Monitoring (RARM) Equipment*, Rev 0
- TFC-ESHQ-IH-STD-13, *Illumination*, Rev A-1
- TFC-PLN-34, *Industrial Hygiene Exposure Assessment Strategy*, Rev D-3
- Attendance Roster for TFC-PLN-34 Lighting Update Industrial Hygiene training
- *Worksite Hazard Analysis* form
- CH2M HILL Illumination Standard Powerpoint Presentation and Learning Verification
- TFC Activity Completion Rosters and ITEM Reports for TO8017, Illumination and Lighting Standard training
- Interoffice Memorandum 73D20-BJK-08-082, August 15, 2008, *2008 Lighting Surveys in 241-AN and 241-C Tank Farms*
- Interoffice Memorandum 73D20-MTH-08-066, April 7, 2008, *Lighting Survey at 241-C-109 Retrieval Operations Locations*
- *Contractor Readiness Assessment Report for the Single-Shell Tank 241-C-110 Waste Retrieval and Transfer to Double-Shell Tank 241-AN-106*, dated September 17, 2008

Activities/Operations Observed:

- Walkdown of 241-C Tank Farm RARMs and WRRMCAMs
- TFC-WO-08-1285C-110 Install/Remove Ops Cameras at Risers 3 & 6

Interviews:

- Industrial Hygiene Manager
- Safety and Health Engineer/Analyst
- Industrial Hygienists (2)
- American Electric C Farm Construction Workers
- Radiological Control Technicians
- 241-C-110 Readiness Assessment Team Members
- 222-S Facility Manager

Results:

Objective evidence reviewed verified the project had established credible functions, characteristics and constraints for both radiation monitors and remote monitoring cameras, conducted analyses for three alternatives for each, and made selections based upon analyses results. The selected alternatives were procured and tested before ten radiation monitors and five cameras were installed in and between 241-C and 241-AN Farms to support 241-C-110 tank waste retrieval operations.

The RARMs and WRRMCAMs were installed for the initial 241-C-110 tank waste retrieval operation and were considered to have worked adequately, although use for their design function was not tested during the retrieval process because an actual leak was not encountered.
An illumination standard (TFC-ESHQ-IH-STD-13) was developed, remains implemented, and is identified in the Industrial Hygiene exposure assessment strategy (TFC-PLN-34). Personnel

training on the standard was documented and an illumination evaluation was added to the Worksite Hazard Analysis form.

Illumination surveys were conducted for 241-C-110 tank waste retrieval operations and verified by the contractor Readiness Assessment. The design and functionality of the RARMs and WRRMCAMs were also verified by the contractor Readiness Assessment.

Conclusions:

Remote radiation monitoring and camera systems were procured, tested and installed to identify small quantity leaks during retrieval operations. They were utilized for initial 241-C-110 tank waste operations. Their effectiveness was not challenged during retrieval operations because there were no leaks encountered, but testing activities suggest they will be effective. An illumination standard was created, and the need to evaluate lighting conditions was instituted into the Worksite Hazard Analysis process. Further, readiness assessment criteria for retrieval validated both the leak identification equipment operability and illumination conditions.

Rating:

Effective

Recommendation for Completion:

None

Suggestions for Continued Improvement:

None

Reviewer:

Lead, Kerry Schierman, DOE-RL, Facility Representative
Joe Sondag, DOE-ORP, Facility Representative

Corrective Action Evaluation Form
Type A WC-2

JON/Finding:
Type A WC-2, CH2M HILL management needs to clarify technical safety requirements with regard to radiological measurements as indicators of waste transfer leaks.

Corrective Actions Reviewed:

CHG-WC-2.1
Establish industrial hygiene and radiological control approval designators for active transfer procedures.

CHG-WC-2.2
Revise and implement procedure TFC-ESHG-RP_ADM-P-01, *Radiological Monitoring During Waste Transfers and Waste Pump Maintenance Activities*, to clarify monitoring requirements associated with implementing TSR requirements for leak detection. Revised procedure will include guidance for developing comprehensive monitoring requirements for TSR level leak detection monitoring, and radiological control monitoring, that flow down into waste transfer monitoring technical work documents, as implemented by Action CHG-ENG-1.2.

Documents Reviewed:

- 2-2007-1746.1 Closure Package for CH2M-PER-2007-1746.1 (contained active/inactive waste transfer procedure coverage pages with radiological control and industrial hygiene approval designators)
- TFC-ESHQ-RP_ADM-P-01, REV C, C-1, C-2 and C-3, *Radiological Monitoring During Waste Transfers and Waste Pump Maintenance Activities*
- RPP-PLAN-35830, rev. 5, *Radiological Control Monitoring Plan for Tank 241-C-110 to Tank 241-AN-106 Waste Transfer*
- TO-220-113, *Over-Ground Transfer from 241-C-110 to 241-AN-106 and Sluicing of Tank 241-C-110*
- Lesson Plan for Course # 351038, *Radiological Monitoring for Waste Transfers*
- Training Course Materials for #351038 Rev. 0801.0, *Radiological Monitoring for Waste Transfers*
- Training materials for course number 356431, *HPT Radiological Monitoring for Waste Transfers – Walkdown Checklist*
- Training Materials for course number 356429, *HPT Radiological Monitoring for Waste Transfers – Classroom*
- Course completion roster for *Radiological Monitoring During Waste Transfers Course 351038*
- HNF-SD-WM-TSR-006, Rev. 6-A, *Tank Farms Technical Safety Requirements*; HNF-IP-1266, *Tank Farms Operations Administrative Controls*, section 5.11 Transfer Controls

- Task No. COO-VAR6, Rev.2, *Radiological Control Scheduled Radiation Survey Task Description*
- Radiological Survey Reports: COC 001465, COC 001467, COC 001476, COC 001477, COC 001479, COC 001480, COC 001481, COC 001487, COC 001488 and COC 001491
- TO-220-113, *Over-Ground Transfer from 241-C-110 to 241-AN-106 and Sluicing of Tank 241-C-11*

Activities/Operations Observed:

- Briefing and field walk down of the 241-C-110 to 241-AN-106 waste retrieval system for HPTs in training for C-110 retrieval operations (course number 356431, "HPT Radiological Monitoring for Waste Transfers – Walkdown Checklist.")

Interviews:

- SST Retrieval and Closure Radiological Controls Manager
- Health Physicists (2)
- Radiological Controls First Line Supervisors (3)
- Health Physics Technicians (5)

Results:

The evidence files and documentation for corrective actions CHG-WC-2.1 and CHG-WC-2.2 indicated that all actions have been adequately completed and closed out. Active waste transfer procedures indentified on the WRPS Procedures and Training web page under the *Index of Operating Procedures* (TO-XXX-XXX) contained the Radiological Controls and Industrial Hygiene approval designators. Procedure TFC-ESHG-RP_ADM-P-01, *Radiological Monitoring During Waste Transfers and Waste Pump Maintenance Activities* was revised and included clear guidance for identifying monitoring requirements associated with implementing TSR requirements for leak detection and radiological control monitoring requirements.

Training course 351038, *Radiological Monitoring for Waste Transfers* was provided to Health Physicists and Radiological Engineers responsible for preparing radiological monitoring plans. The course content was adequate and current Health Physicists and Radiological Engineers have received this training. The Health Physicists interviewed understood the requirements contained in TFC-ESHQ-RP_ADM-P-01, *Radiological Monitoring During Waste Transfers and Waste Pump Maintenance Activities.*

Technical Safety Requirements Administrative Control (AC) 5.7 "Safety Management Programs" and AC 5.11 "Waste Transfer Controls" were clearly identified in RPP-PLAN-35830, rev. 5, *Radiological Control Monitoring Plan for Tank 241-C-110 to Tank 241-AN-106 Waste Transfer.* These ACs are implemented through Radiological Control Scheduled Survey Tasks during waste transfer operations and the results are recorded on Data Sheet 2 of procedure TO-220-113, *Over-Ground Transfer from 241-C-110 to 241-AN-106 and Sluicing of Tank 241-C-110.* The Health Physicists interviewed understood the ACs, how they were implemented and where potential leak paths or misroutes could occur in the system.

Two qualified HPTs and their first line supervisor discussed the requirements of RPP-PLAN-35830, rev. 5, *Radiological Control Monitoring Plan for Tank 241-C-110 to Tank 241-AN-106 Waste Transfer* during a field walk down of the C-110 waste transfer system with newly assigned HPTs. Survey locations, anticipated dose rates and the upset condition dose rates were discussed as well as documentation requirements for compliance with AC 5.7 and AC 5.11.

Conclusions:

Industrial hygiene and radiological control approval designators for active transfer procedures have been established and procedure TFC-ESHG-RP_ADM-P-01, *Radiological Monitoring During Waste Transfers and Waste Pump Maintenance Activities* is effectively implemented. The training provided to Health Physicists and Radiological Engineers was adequate to ensure that the TSR controls for leak detection monitoring and other radiological control monitoring requirements are implemented in radiological monitoring plans for waste transfers. Technical Safety Requirements AC 5.7 and AC 5.11 controls were identified in RPP-PLAN-35830, rev. 5, *Radiological Control Monitoring Plan for Tank 241-C-110 to Tank 241-AN-106 Waste Transfer* and the Health Physicists and HPTs are knowledgeable of the monitoring requirements.

Rating:

Effective

Recommendation for Completion:

None

Suggestions for Continued Improvement:

None

Reviewer:

Joe Sondag, DOE-ORP, Facility Representative

Corrective Action Evaluation Form
Type A WC-3

JON/Finding:
Type A WC-3, CH2M HILL management needs to address radiological conduct of operations deficiencies that were evident during the S-102 response to abnormal operating conditions.

Corrective Actions Reviewed:

CHG-WC-3.1
Combine Abnormal Operating Procedures (AOP) with similar initial actions including TF-AOP-006 and -011, utilizing an Enhanced Work Planning approach, including representatives from operations, as well as Industrial Hygiene, Radiological Control, and Emergency Preparedness.

CHG-WC-3.2
Review all Abnormal Operating Procedures utilizing an Enhanced Work Planning approach including representatives from operations as well as industrial hygiene, radiological control, and emergency preparedness. Implement revisions with focus on effective flow between Alarm Response Procedures, AOPs and Emergency Response Procedures.

CHG-WC-3.3
Implement a process for safe AOP response such that planning time is minimized for event response and stabilization.

CHG-WC-3.4
Complete review of abnormal operating procedure changes utilizing table top drill format with all tank farm shifts.

Documents Reviewed:

- Course Completion Rosters and ITEM records for Abnormal Operating Procedure table top drills
- Closure Operations Standing Order CO-07-007, *Industrial Hygiene Sampling When Implementing TF-AOP-006, TF-AOP-011, and TF-AOP-015*
- Waste Feed Operations Standing Order WFO-07-005, *Industrial Hygiene Sampling When Implementing TF-AOP-006, TF-AOP-011, and TF-AOP-015*
- TF-AOP-003, *Response to Elevated Airborne Radioactivity*, Rev B-8
- TF-AOP-004, *Response to Seismic Event*, Rev C-2
- TF-AOP-005, *Response to Unexpected Tank Temperature, Level or Flammable Gas Increase*, Rev B-7 and C-0
- TF-AOP-006, *Response to High Radiation*, Rev C-4 and C-5
- TF-AOP-011, *Response to Radiological/Hazardous Material Leaks, Spills and/or Personnel Contamination*, Rev B-8, B-9, B-10, and C-2
- TF-AOP-015, *Response to Reported Odors or Unexpected Changes to Vapor Conditions*, Rev B-14 and C-0
- TF-AOP-018, *Response to Electrical, Water, Air or Pressurized Gas Cylinders High Energy Releases*, Rev B-1 and C-0

- TF-AOP-020, *Response for Placing Personnel and Equipment in a Safe Condition*, Rev C-0
- TF-AOP-021, *Response to Tank Farm Ventilation Upset*, Rev A-1
- TFC-OPS-MAINT-CO-1, *Tank Farm Contractor Work Control*, Rev N-3 and N-9
- TFC-OPS-OPER-STD-01, *Technical Procedure Format and Preparation Standard*, Rev A-4
- TFC-OPS-OPER-C-13, *Technical Procedure Control and Use*, Rev F-13
- Immediate Recovery Work Briefing, Feb 20-27, 2008, and Course Completion Rosters
- 41 Problem Evaluation Reports (PER) and resolutions from a search of "AOP" for 2008 and 2009
- DOE-ORP Letter, 09-ESQ-082, "Washington River Protection Solutions LLC (WRPS) Response to Abnormal Events Surveillance S-09-ESQ-TANKFARM-003," dated March 11, 2009
- WRPS Letter, WRPS-0900518 R2, "Washington River Protection Solutions LLC Response to Abnormal Events Surveillance S-09-ESQ-TANKFARM-003, 'Washington River Protection Solutions LLC Root and Common Cause Analysis Results'"

Activities/Operations Observed:

- Table-top Drill – Tank Waste Leak in C Farm

Interviews:

- Base Operations ESH&Q Manager
- Base Operations, Operations Manager
- DOE-ORP Facility Representatives
- DOE-OPR Tank Operations Division Director
- ESH&Q Manager
- ESH&Q Deputy Manager
- Emergency Preparedness Specialists
- Industrial Hygiene Manager
- Procedures Manager
- Procedures Records Management Specialist
- Quality Assurance Engineer
- Radiological Controls Supervisor
- Shift Operations Manager
- Technical Writer/Editor (3)

Results:

Objective evidence files indicated all Abnormal Operating Procedures (AOP) were reviewed and changes were made to TF-AOPs 005, 011, 015 and 018. TF-AOP-006 was initially changed, but ultimately its actions were incorporated into TF-AOP-011 and then TF-AOP-006 was cancelled. The assessor reviewed the changes, verifying content of the changes addressed shortcomings identified in the S-102 event. An enhanced work planning approach for the change process was verified by review of concurrence organizations identified on the changes and discussions with personnel. Other AOPs (003 and 004) that were not changed, but addressed similar types of events, were also reviewed by the assessor and determined to contain adequate flow between response procedures. Records of AOP validations via table-top drill activities were evident.

Revisions to AOPs were still in progress. TF-AOP-003 had a periodic review change pending, and was currently more than two months past due (February 6, 2009) for the change. A justification for continued use was approved on February 13, 2009. Also, the corrective action specified for PER 2008-1788 of September 10, 2008, stated AOPs are currently being reviewed against changes recently completed on Alarm Response Procedures, to identify and corrective any inconsistencies between the two. Completion of the action is due on April 30, 2009.

The AOP change process itself was reviewed to verify an enhanced work process continued to be used for subsequent technical changes to AOPs and to ensure S-102 corrective actions remained identifiable in history files. A Suggestion for Continued Improvement in this area was identified (see below) for consistency in concurrence designations. Specifically, a consistent enhanced work planning/document concurrence approach should be implemented for technical changes to Abnormal Operating Procedures. The corrective actions (CHG-WC-3.1/3.2) designated for the S-102 event specified that Operations, Emergency Preparedness (TFC-OPS-OPER-C-13, Attachment A designator "EP"), Industrial Hygiene (designator "S") and Radiological Control (designator "R"), as a minimum, should be included in the AOP change process. Review of the AOP technical changes made as a result of the S-102 event identified an inconsistent approach to designation and participation of enhanced work planning participants was implemented:

- TF-AOP-005, Rev B-7, contained only an "R" review designator, although the IH Program Manager and Emergency Management/Safeguards and Security Lead also signed the change for concurrence.
- Initial revisions (C-4 and C-5) to TF-AOP-006 before it was combined with TF-AOP-011 and cancelled, contained "E" (Rev C-4, only), "R," and "S," but in each case the Emergency Management/Safeguards and Security Lead also signed the changes for concurrence.
- TF-AOP-011, Rev B-11, contained only an "R" review designator, although the Emergency Management/Safeguards and Security Lead also signed the change for concurrence. The Safety Engineer signature was marked "N/A." Note: Revision C-0 was designated "E," "R," and "S," but was also signed by a delegate for the Emergency Preparedness Lead.
- Approval designators were not available for TF-AOP-015 (Rev B-14) and TF-AOP-018 (B-1) S-102 driven revisions, but in each case a Safety Engineer, Radiological Engineer and Emergency Management/Safeguards and Security Lead concurrence signature was evident.

The "Immediate Recovery Work" process was reviewed and discussed with personnel that would be involved in its implementation. As a result of the S-102 event, the TF-OPS-MAINT-C-01 "Emergency Recovery Work" process was renamed the "Immediate Recovery Work" process with the intent that it be used for events similar in nature to the S-102 event. Appropriately, the process has been infrequently used (personnel interviewed identified no known implementations). Perhaps because of this, personnel knowledge of the process and its application appeared limited, despite evidence of an awareness briefing having been provided to appropriate personnel in February 2008. Some personnel specified to be involved with the implementation process did not appear to be familiar with the process or their roles in it when questioned, and some demonstrated confusion as to who (by name) was being referred to as the actionee when the procedure specified the "Base Operations Manager" and/or the "ESH&Q Manager." Despite training on the process in 2008, it was evident that a number of personnel were either unfamiliar with the process or unclear on who was being designated to perform actions in the procedure (see Suggestion for Continued Improvement, below).

No entries into AOPs were observed by the review team. Therefore, effectiveness was reviewed via personnel interviews and reviews of recent PER information. The information reviewed identified issues with AOP entry and compliance:

- WRPS-PER-2009-0178 (January 27, 2009) identified an issue where TF-AOP-021 was not adequately followed;
- WRPS-PER-2009-0385 (March 11, 2009) identified a Concern and six Findings from a DOE-ORP surveillance in the area of response to abnormal events; and
- WRPS-PER-2009-0584 (April 7, 2009) identified a DOE-ORP FR Finding on failing to enter AOPs in a timely manner.

On April 14, 2009, the actions of TF-AOP-021 were not completed in their entirety when a radio announcement of the event was not made. No PER entry was made on the specifics of the non-compliance, but a PER (WRPS-PER-2009-0662) was entered identifying that TMACS was initially unaware of the shutdown.

In addition, several other procedure compliance issues have been identified in 2009:

- WRPS-PER-2009-0269 identified an instance where a step requiring engineering approval was missed in a work instruction;
- WRPS-PER-2009-0439 identified an issue where a continuous use procedure was not present when conducting the actions of the procedure; and
- WRPS-PER-2009-0471 identified where a DOE-ORP FR twice observed a procedure not being adequately followed.

The assessor noted that more than half of the recent AOP and other procedure non-compliance issues entered into the PER database were identified by oversight personnel external to the contractor's organization. TFC-ESHQ-Q_C-C-01, *Problem Evaluation Request*, Rev E, states, "A PER shall be initiated for conditions that require resolution, trending, cause determination, or identification and tracking of corrective actions." Since the assessors identified Senior Supervisory Watches and other supervisors and managers in the field during work activities, the assessors must assume that either these contractor oversight personnel are not recognizing procedure compliance issues that are occurring, or don't recognize the value of documenting such observations for causal determination, trending, and/or resolution. This issue was most prevalent in the case of WRPS-PER-2009-0662, discussed above, where a missed AOP step was identified by a DNFSB Site Representative. Rather than the contractor entering the item as a procedure non-compliance in PERs, the issue was entered by a TMACS Operator as an observation that TMACS was not being kept informed of alarms. As such, the significance level was designated as "PIE/CIM" ("a suggestion or industry report identifying process improvements, program enhancement, continued quality improvements, or recommendations, or used for evaluation of external lessons learned" – TFC-ESHQ-Q_C-C-01, Table 2) rather than more appropriately, a "PER with Resolution" ("An adverse condition which includes problems, such as failure to comply with the documented safety analysis, technical specifications, DOE orders, regulations, contract requirements, or administrative controls, procedures, instructions, noncompliances that adversely affect tank farm facility system hardware/software operability, reliability, or performance" - TFC-ESHQ-Q_C-C-01, Table 2). The assessor suggests the Tank Operations Contractor should ensure personnel are able to recognize procedure non-compliances and document their identification for causal determination, trending, and/or resolution.

Operations management acknowledged awareness of weaknesses in procedure compliance in general and AOPs specifically. A root and common cause analysis (WRPS Response to Abnormal Events Surveillance S-09-ESQ-TANKFARM-003) for the issues identified in WRPS-PER-2009-0385 above, and DOE-ORP Letter 09-ESQ-082, dated March 11, 2009, established three judgments of need in this area:

- Reestablish a culture committed to procedural compliance, conservative decision making, and questioning attitude;
- Perform procedure reviews for consistency and perform field observations to ensure procedure compliance and effective communications; and
- Strengthen training and qualification requirements relied upon to implement expectations.

The assessor suggests that procedure non-compliance events that have been identified since the root cause analysis has been performed should also be considered when implementing the corrective actions identified in the report (as approved/accepted by DOE-ORP).

The assessor attended the project's "CONOPS Council" meeting. Development of a conduct of operations improvement plan was discussed. The chairman of the council stated the three areas of greatest concern were procedure compliance, communication, and command and control.

Conclusions: AOP revisions to address S-102 lessons learned have been completed and validated via the table-top drill process. Personnel continue to identify issues with AOP content, but management appears to address the issues via accepted processes, and was currently ensuring AOP consistency with Alarm Response Procedures. Consistency in the approach to selection of which organizations participate in AOP concurrence is suggested. Improvement in personnel awareness and knowledge of the "Immediate Recovery Work" process also appears warranted. Finally, procedure compliance in general, and AOP compliance in particular, remain a challenge for the organization. A root cause analysis was recently completed in this area and a conduct of operations improvement plan is in development. Approval and implementation of each should improve performance in this area. Corrective actions of this JON have been completed. However, the corrective actions have not proven entirely effective in preventing recurrence of procedure compliance issues.

Rating:

Partially Effective

Recommendation for Completion:

R-WC-3-1

WRPS should complete the corrective actions to improve Conduct of Operations and response to abnormal events identified by WRPS letter to DOE-ORP, "Washington River Protection Solutions LLC Response to Abnormal Events Surveillance S-09-ESQ-TANKFARM-003, 'Washington River Protection Solutions LLC Root and Common Cause Analysis Results,'" dated April 8, 2009, by the dates specified in the enclosure, and conduct an effectiveness review by the end of fiscal year 2009.

Suggestions for Continued Improvement:

S-WC-3-1
A consistent enhanced work planning/document concurrence approach should be implemented for technical changes to Abnormal Operating Procedures.

S-WC-3-2
The TOC should conduct periodic awareness/proficiency training on the "Immediate Recovery Work" process for those personnel involved in the process.

S-WC-3-3
Procedure non-compliance events identified since the issue of WRPS letter to DOE-ORP, "Washington River Protection Solutions LLC Response to Abnormal Events Surveillance S-09-ESQ-TANKFARM-003, 'Washington River Protection Solutions LLC Root and Common Cause Analysis Results,'" dated April 8, 2009, should be considered when implementing the corrective actions identified in the report.

S-WC-3-4
The Tank Operations Contractor should improve the self-identification and reporting (i.e. per the PER process) of procedure non-compliances to facilitate causal determination, trending, and/or resolution.

Reviewer:

Lead, Kerry Schierman, DOE-RL, Facility Representative
Courtney Blanchard, DOE-ORP, Facility Representative
Joe Sondag, DOE-ORP, Facility Representative
Ron Ciola, DOE-ORP, Facility Representative

Corrective Action Evaluation Form
Type A: WC 4

JON/Finding:
Type A: WC 4, CH2M Hill workers, supervisors, and management need to improve the implementation of the Conduct of Operations Programs as required in the Safety Basis and Conduct of Operations Applicability Matrix, March 20, 2007.

Corrective Actions Reviewed:

CHG-WC-4.1
Conduct field level conduct of operations briefings with all field personnel in WFO, Closure, and ATS

CHG-WC-4.2
Perform a training needs analysis to identify and incorporate conduct of operations/formality of operations lessons learned and operating experiences

CHG-WC-4.3
Develop a training class based on the Training Needs Analysis.

CHG-WC-4.4
Deliver training class to target audience identified in training analysis.

CHG-WC-4.5
Develop and provide briefing to field work supervisors on discrepancies associated with worksite hazard analysis requirements not met per TFC-OPS-MAINT-C-01, Tank Farm Contractor Work Control, prior to the July 27, 2007 waste leak.

CHG-WC-4.6
Modify TFC-OPS-OPER-C-17, Operating Logbooks, to require that an intermittent logbook be maintained for retrieval operations.

CHG-WC-4.7
Revise work control procedure on performing minor maintenance work to clarify when this work control process can be utilized.

Documents Reviewed:

- Final Report FY2008-CH2M-1-0003; CH2M HILL Hanford Group, Inc. Independent Assessment of Corrective Action Plan Implementation for Tank 241-S-102 Waste Spill Investigation and Analysis Reports Midpoint Assessment, February 11 - February 29, 2008
- Safety Basis and Conduct of Operations Applicability Matrix, March 20, 2007
- TFC-OPS-MAINT-C-01; *Tank Farm Contractor Work Control*
- TFC-ESHQ-S_SAF-C-02, *Job Hazards Analysis*

- TFC-OPS-OPER-C-17, *Operating Logbooks*
- TFC-OPS-OPER-C-12, rev. A-7, *Observation and Evaluation of Field Work Supervisor Candidates*
- TFC-ESHQ-IH-STD- 13, rev. A, *Worksite Hazard Analysis*
- Presentations developed to support work control process change personnel briefing requirements
- Presentation provided to Senior Management on the difference between standard and complex work packages
- Various Completed Work Packages
- Various Minor Work Packages
- Base Operations Planning Template
- OA Database Entry 3310

Activities/Operations Observed:

- Base Ops Double Shell Tanks Plan of the Day Meeting
- Base Ops Single Shell Tank Plan of the Day Meeting
- Contractor Morning Status Meeting
- Contractor Daily Release Sheet Meeting
- TFC-09-0439; Install new Drain Seal Assemblies in AZ-101/102A Pit
- WFO-WO-05-002807; Replace Chiller AZ-CW-R-1
- TFC-09-1566-242A HVAC; HMI Loss of Power Alarm Troubleshooting Package
- CLO-07-0729; Remove Jumpers from C-104 pit
- WFO-07-3186; 241-AN Repair Lighting and Replace Disconnects
- TFC-09-1519; 242-A, Dynamic Test Raw Water Pressure Control Valves
- Table Top Drill of Retrieval Operations Emergency Procedures
- CONOPS Improvement Council
- CONOPS Sensitivity Training

Interviews:

- Shift Managers
- Field Work Supervisors
- DST Planning Manager
- SST Planning Manager
- 242-A Facility Manager
- Work Planning Manager Double Shell Tanks
- Work Planning Manager Single Shell Tanks

Results:

Conduct of Operations

The assessors reviewed work in the field as a primary method of determining compliance and knowledge of conduct of operations requirements. There were no deficiencies noted. The assessor focused on several areas, including shift routines and operating practices, training, and procedural compliance.

The assessor noted that Standing Order 07-008, *C-110 Retrieval Operations*, has been in effect since November 2008, and did not have a planned end date. The Standing Order also did not include any wording to indicate when or how it will be cancelled. An earlier version of the Standing Order contained words to this effect -- "this Standing Order will remain in force until a formal organizational change is implemented and the new organizational structure and necessary procedure changes are reviewed by the Chief Operating Officer and determined to satisfy the issue identified in CH2M-PER-2007-1821." Discussions with the interviewees indicated the current Standing Order will remain in effect through the C-110 retrieval period, after which it will be cancelled.

The assessors also attended a "CONOPs Council" meeting. The council was recently created, and meets on a monthly basis. It consists of both management and bargaining unit personnel, however, bargaining unit attendees were not among those at this meeting. TOC management took action to gain bargaining unit attendance at the next meeting. The council addressed multiple conduct of operations issues. During this meeting, they discussed oversight - particularly the management oversight. It was stated at the meeting that the process that directs management oversight requires twelve different forms that could be filled out to document oversight. The associated complexity has potentially impeded managers from going into the field in the past. One attendee created a single form on one sheet of paper, which should promote field time. A conduct of operations improvement plan is being developed by the Operations Shift Manager. According to the Operations Shift Manger, the plan focuses on recent areas of weakness, including procedure compliance, communications, and command and control. The assessor noted that the people in attendance at the CONOPs Council were energetic and proactive. There were many ideas brought to the table, including areas of improvement and potential new team members. Attendees included the Project Operations Manager and Radiological Controls Management.

Assessors attended CONOPs Sensitivity Training. This was not the result of a corrective action, but was conducted proactively by the C-Tank Retrieval and Closure Manager. The discussions centered on procedure compliance and avenues of communication during the retrieval processes. The Radcon Supervisor and Industrial Health Supervisor discussed events and lessons learned from the last retrieval operations and changes for the upcoming retrieval activity. The meeting appeared beneficial.

A review of the Tank Operations Division Operational Awareness database entries showed that conduct of operations briefings on procedural compliance were given to each shift of operators by the Shift Managers.

The overall performance of conduct of operations in the field was adequate. The ongoing efforts of the contractor to improve conduct of operations – the CONOPs Council, Sensitivity Training, CONOPs Improvement Plans – all show the desire of the Tank Operations Contractor to continually improve and increase their performance in this area.

The assessor discussed the intermittent retrieval logbook with the Operating Engineer. The logbook tracks the activities associated with the retrieval operations and is maintained by the

Operating Engineer. The logbook allows a clear, written record of retrieval operations separate from other operations at Tank Farms. The Operating Engineer considered the logbook an effective method of recording this information.

General Work Control

During the S-102 event, work was performed using a troubleshooting document, and the Field Work Supervisor invoked a General Hazard Analysis that did not cover the hazards for the work. It was also determined that the scope of work was not appropriate for electrical work activities. Further, the work was performed using a minor work order which was not released properly. Minor work orders require that the scope of the work be identified in the Work Record of the minor work package prior to release – this was also not completed.

The assessment team reviewed objective evidence presented on ESTARS/IDMS, including briefing packages, which described the problems outlined above, which occurred during the S-102 event, and the improvements made in the hazard analysis process since the event. The slides showed evidence of training on discrepancies vs. expectations and weaknesses. The deliverables also included training rosters by student and instructors, and lists of qualified Field Work Supervisors. The assessor also reviewed a DOE validation review conducted in April 2007, which determined that some training rosters were missing information, including instructor signatures and dates. OA database entry 3310 verifies that the training rosters were corrected after the DOE Facility Representative contacted the contractor with the discrepancy.

The assessment team found that some training packages went above and beyond the requirements for a briefing in that they contained evidence of a knowledge check (written exam) given to the students following the training, and evidence that the training was attended by Operating Engineers as well as the Field Work Supervisors.

TFC-OPS-MAINT-C-01, *Tank Operations Contractor Work Control*, procedure contains many uses of the word "ensure," and in some instances the use of the word is inappropriate as it is a vague, ambiguous action word. The Hanford Site River Protection (CH2M HILL Hanford Group, Inc.) EM-62 Assessment Report, March 2008, cites this deficiency, "WP.2-O-2 The action word 'ensure' was noted to be either misused or over used..." The final deficiency noted in the work control procedure was found in Step 7 of Section 4.4.1.3, minor work orders. It was vague in directing the Field Work Supervisor/worker to "Follow applicable sections" of the procedure.

Telephone Approval for Work Release

The assessment team interviewed the training coordinator for the Field Work Supervisors, Operating Engineers, and Shift Managers. An interview with training personnel and review of documentation concluded that procedure TFC-OPS-OPER-C-12, *Observation and Evaluation of Field Work Supervisor Candidates* – has requirements for evaluating FWS's in the areas of work instructions, hazards identification, work documentation, correcting or modifying work documentation, and Job Hazard Analysis. Interviews with Field Work Supervisors, Shift Managers and Operating Engineers concluded there is a strong general knowledge in these areas.

However, there were differing opinions on whether work release via telephone (telcon) approval was acceptable.

The discrepancy regarding whether telcon approval of work release also differed amongst the two work planning managers, one believed it was not acceptable, while one claimed it was acceptable. The assessors also reviewed minor work procedure TFC-WO-09-0008, which specifically allows telcon SM concurrence for work release in the verbiage of the document.

Some of the interviewees were of the opinion that telcon work release should not be allowed since the verbal information can be recorded differently and the message lost. The Shift Manger on watch and Ops Shift Manager thought that telcon work release was allowed. Note that the S-102 event involved a telcon concurrence for work release.

The assessor suggests a clarification of the telcon practice, whether and when it is allowable, and what signature requirements apply if it is. Currently, there is no direction on the practice of telcon work release in the TFC-OPS-MAINT-C-01; *Tank Operations Contractor Work Control Procedure,* although the assessors reviewed minor work orders that specifically call out telcon work release as an option.

Minor Work and Hazard Assessment

As a result of the S-102 corrective action process, TFC-OPS-MAINT-C-01; *Tank Operations Contractor Work Control Procedure*, was changed to better outline the differences between minor work and non-minor work. Minor work can be performed to standing work orders or minor work orders. A streamlined hazard evaluation is performed for minor work. If not deemed minor work, the activity falls within the "standard work process." The standard work package preparation and approval process requires more rigor than that of minor work.

The different levels of hazard analysis are outlined in TFC-ESHQ-S_SAF-C-02, *Job Hazards Analysis*. Some minor work such as routine work can be performed to a General Hazard Analysis while other minor work, such as non-routine minor work must utilize a Worksite Hazard Analysis. Standard work must be performed to a job hazard analysis checklist, and complex work requires the highest tier of hazard control -- a Safety Plan. The S-102 corrective action plan Type A finding CHG-WC-4.4 required training be conducted to delineate the differences between the hazard reviews for minor work and standard work. Deliverables show objective evidence of training materials and a roster of completion. Interview with the Operations Shift Manager concluded that the training has been incorporated into the qualification process for the Shift Supervisors, Shift Managers, and Operating Engineers.

The assessors reviewed TFC-OPS-MAINT-C-01, *Tank Operations Contractor Work Control Procedure*, and attended the Plan of the Day Meetings to better understand the effectiveness of work control. Work order release is discussed in Section 4.6 of procedure TFC-OPS-MAINT-C-01. It requires that the contractor "develop a daily schedule/release sheet that reflects the work to be performed." This process is coordinated by the Work Maintenance & Integration group. A Daily release sheet contains a list of work items released for work that day. It is derived from a master schedule that is updated as work packages are completed, authorized and prioritized.

Minor work is identified on the Daily Release Sheet as well as non-minor work. Minor Work determination is made by the Field Work Supervisor or the Radcon First Line Supervisor. All minor work is initiated at the Shift Manager's Office by entering the scope of the work into the work record for the package. The Shift Manager reviews the scope of work to determine if it is appropriate. Work Records for Minor Work have a list of standard questions that make it easier to review for work release. The questions guide the Shift Manager, for instance, "work hazard analysis used?", "liquid encountered?", "posted radiological area?". This has been found to be very effective. Finally, if the work is on the Daily Release sheet, the Shift Manager approves it for work. Of note, since S-102 all work is released through one shift office, located at the 200 East Area.

The assessors attended Plan of the Day meetings. The Daily Release Sheet from the current day and following day was reviewed by line item. The status of each job was discussed and complete jobs removed from the list. The Daily Release Sheet for the following day was then compiled.

The assessors interviewed members of the Work Planning and Integration group. The difference between minor work and non-minor work was discussed. The interviewees were consistent in their knowledge, which was detailed. The Scheduler was intimately aware of the process for compiling and approving of work on the Daily Release Sheet. Supervisory personnel in the Work Planning and Integration Group understood the details of the process of approving minor work and the differences between minor and non-minor work. Supervisory personnel also were very familiar with TFC-OPS-MAINT-C-01, *Tank Operations Contractor Work Control Procedure.*

During a pre-job briefing the assessor noted that a worker asked what hazards were present in the farm from other, adjacent jobs. The question was also extended to include adjacent farms, which shows an awareness of hazard analysis for collocated work. Tank Operations Division Facility Representatives recently identified an issue where collocated work presented hazards to an adjacent work crew. The issue resulted in a lessons learned issued to the workforce, and this question during the prejob brief demonstrated the effectiveness of this corrective action and in-depth level of hazard awareness by the workforce.

Troubleshooting

The East Ops Planning Manager, Operations Organization Manager, Operations Shift Manger, and Shift Manager were interviewed. When asked about work control changes since the S-102 event, most were able to point to several Troubleshooting Documents that have been worked recently. The assessor did verify one troubleshooting procedure was correctly implemented and controlled in the field. The planning manager cited AN Farm grounding work as another example of troubleshooting that has been done in accordance with the requirements.

The assessors observed a job where the job had to be stopped due to an inadequate Troubleshooting Plan. The HMI loss of power alarm package failed to be effective in the first step. The FWS commented that there should have been a walk down performed before the Troubleshooting Plan was prepared. The plan was not consistent with the equipment alignment in the field. The assessors also observed a job where the Troubleshooting Plan was workable,

and was prepared in accordance with the requirements. The work replacing the AZ chiller unit proceeded after a Troubleshooting Plan was prepared and worked. It should be noted that the Troubleshooting Plan work was followed by a successful foray into a minor standing work document for Instrumentation Troubleshooting and Repair. This work was accomplished with minor delay.

Of interest, medium risk work packages were required to go through Joint Review Group (JRG) review after S-102. Since then, this requirement has been relaxed to allow the work planning manager to decide if it required JRG review. Some medium risk work has been repetitively performed, and crews are familiar and experienced with them.

One issue the assessors noted is that TFC-OPS-MAINT-C-01, *Tank Operations Contractor Work Control Procedure*, does not define troubleshooting. Definitions for other terms such as routine maintenance are referenced to TFC-ENG-SB-C-03, *Unreviewed Safety Question Process*. Referencing the other procedure complicates the work control process.

Other Improvements since S-102

Since S-102, a Work Instruction Planning Template has been developed that contains standard wording to use for each job, as it applies to the specific work. For instance, if the job requires radcon stop points, this template has the standard wording for that activity. This is very effective at familiarizing the workforce with the requirements that apply to repetitive work practices, and makes the requirements easily recognizable by the Field Work Supervisor.

Immediate Recovery Work

One problem the assessors noted during the review is that Section 4.3 of TFC-OPS-MAINT-C-01, *Tank Farms Contractor Work Control Procedure*, is titled "Immediate Recovery Work." This procedure directs the reader to TFC-ESHQ-RP_RWP-C-04, *Radiological Work Permits*, for details on when this work can be done without a Radiological Work Permit (RWP). However, the RWP procedure cites this work as "Emergency" vice "Recovery" work. The procedures need to be better coordinated.

Also, Section 4.3 of TFC-OPS-MAINT-C-01, *Tank Farms Contractor Work Control*, does not address industrial hygiene controls for Immediate Recovery Work. These controls should be incorporated into the discussion alongside other relevant controls.

Conclusions:

Conduct of Operations:
The overall performance of conduct of operations in the field was adequate. The ongoing efforts of the contractor to improve conduct of operations – the CONOPs Council, Sensitivity Training, CONOPs Improvement Plan – all show the desire of the Tank Operations Contractor to continually improve and increase their performance in this area.

Work Controls:
Work controls are adequate, but work control procedures require review and modification in certain areas. The workforce knowledge of work controls also requires improvement. This review also evaluated the effectiveness of corrective actions for EM-60 Review Report Item 9.

Rating:

Effective

Recommendation for Completion:

None

Suggestions for Continued Improvement:

S-WC-4-1
The TOC should determine if and when telephone approval is acceptable for the release of minor work, and proceduralize the requirements if it is deemed allowable.

S-WC-4-2
The TOC should determine the appropriate level of radiological controls for "Immediate Recovery Work" as discussed in TFC-OPS-MAINT-C-01, *Tank Operations Contractor Work Control*; these controls must mesh with Section 4.10 of TFC-ESHQ-RP_RWP-C-04, *Radiological Work Permits* (i.e. consistent terminology—"immediate recovery" vs "emergency").

S-WC-4-3
The TOC should include a requirement to consider the need to develop industrial hygiene and safety controls in Section 4.3 of TFC-OPS-MAINT-C-01, *Tank Operations Contractor Work Control*, when preparing for "Immediate Recovery Work."

S-WC-4-4
The TOC should include definitions for "troubleshooting" and "routine work" in the work control procedure, TFC-OPS-MAINT-C-01, *Tank Operations Contractor Work Control.*

S-WC-4-5
The TOC should revise Attachment B of TFC-OPS-MAINT-C-01, *Tank Operations Contractor Work Control*, to limit use of the word "ensure" when developing work documents; "ensure" is an ambiguous action word.

S-WC-4-6
The TOC should revise TFC-OPS-MAINT-C-01, *Tank Operations Contractor Work Control*, Section 4.4.1.3, Step 7, to remove ambiguity; the step currently directs the Field Work Supervisor/worker to "Follow applicable sections" of the procedure.

S-WC-4-7
WRPS should develop and conduct work control process training with shift managers and field work supervisors.

Reviewer:

Lead, Ron Ciola, DOE-ORP, Facility Representative
Joe Sondag, DOE-RL, Facility Representative
Kerry Schierman, DOE-RL, Facility Representative

Corrective Action Evaluation Form

Type A JON MS-1

JON/Finding:

Type A JON MS-1 - ORP and CH2M HILL need to review and evaluate the adequacy and implementation of corrective action plans for past events and enforcement actions to the S Tank Farms, and ensure that effective lessons learned processes are performed.

Corrective Actions Reviewed:

All of the following Corrective Actions and associated Objective Evidence files were reviewed:

CHG-MS-1.1
Conduct an independent review to determine the effectiveness of causal analyses and corrective actions taken in response to significant events since January 1, 2003.

CHG-MS-1.2
Develop and implement an assessment plan to periodically evaluate the continued efficacy of the lessons learned program and corrective actions taken in response to significant events.

DOE-MS-1.3
Conduct an evaluation of the contractor's independent review of significant events since January 1, 2003, to ensure the review was properly scoped, at an appropriate depth, adequately captured identified issues, and corrective actions were adequate as a result of the review.

DOE-MS-1.4
The ORP Manager will establish requirements for completion of Type A corrective actions for inclusion in the readiness review plan of action prior to the restart of single shell tank retrieval operations at either S-102 or C-Farm.

Documents Reviewed:

- Type A Accident Investigation Report, The July 27, 2007 Tank 241-S-102 Waste Spill at the Hanford Tank Farms
- Corrective Action Plan for Type A Accident Investigation Report
- FY2008-CH2M-1-0003, CH2M HILL Hanford Group, Inc. Independent Assessment of Corrective Action Plan Implementation for Tank 241-S-102 Waste Spill Investigation and Analysis Reports Midpoint Assessment
- FY2008-CH2M-I-0007, Corrective Action Plan Implementation for Tank 241-S-102 Waste Spill End Point Assessment
- CH2M-PER-2007-1749, Problem Evaluation Request
- CH2M-PER-2007-1749; RES; Ensure effective lessons learned processes are performed
- CH2M-PER-2007-1749.2
- 5-SigPER CAP Strategy, Effectiveness Evaluations of Significant Event Corrective Actions
- TFC-PLN-10, Revision C-3
- TFC-PLN-10, Revision C-4
- TFC-PLN-10, Revision E

- FY2008 CH2MHILL Integrated Assessment Schedule, Rev 13
- FY2009 WRPS Integrated Assessment Schedule, Rev 6
- 7-MS-1, Change Analysis
- 3-RPP-RPT-35553 r1, Causal Analysis and Corrective Action Evaluation Report
- 7-TF-018, Office of River Protection Investigation of ORP Actions related to the Tank S-102 Waste Spill
- Human Performance Improvement Review of the DOE Response to Tank S-102 Tank Waste Spill
- Assessment of ORP TF Oversight, (Gibbs Report)
- Contract No. DE-AC27-99RL14047 - C-109 Readiness Assessment Expectations
- Contract No. DE-AC27-99RL14047 –Request Review and Approval of POA-C109-01, "Single-Shell Tank 241-C-109 Waste Retrieval Resumption and Deployment of Foldtrack® Mobile Retrieval Tool", Revision 0
- Contract No. DE-AC27-99RL14047 –Approval of POA-C109-01, "Single-Shell Tank 241-C-109 Waste Retrieval Resumption and Deployment of Foldtrack® Mobile Retrieval Tool", Revision 1
- Event Investigation Reports:
  - EIR-2008-021
  - EIR-2008-024
  - EIR-2008-025
  - EIR-2009-005
- Occurrence Reporting System Reports:
  - EM-RP--WRPS-TANKFARM-2008-0001
  - EM-RP--WRPS-TANKFARM-2008-0002
  - EM-RP--WRPS-TANKFARM-2008-0003
  - EM-RP--WRPS-TANKFARM-2009-0001
  - EM-RP--WRPS-TANKFARM-2009-0002
  - EM-RP--WRPS-TANKFARM-2009-0003
  - EM-RP--WRPS-TANKFARM-2009-0004
  - EM-RP--WRPS-TANKFARM-2009-0005

Activities/Operations Observed:

None

Interviews:

- WRPS - Base Operations, Operations Manager
- WRPS - Base Operations Engineering Manager, Acting
- WRPS - Operations Specialist/Occurrence Reporting Specialist
- WRPS - Performance Assurance/Corrective Action, Manager
- WRPS - Performance Assurance/Corrective Action, Quality Assurance Engineer
- DOE-ORP - Tank Farm Operations, Director
- DOE-ORP – ESQ, Assistant Manager
- DOE-ORP – Verification and Confirmation Division, Program Manager

Results:

The independent review conducted by the contractor in MS-1.1 to determine the effectiveness of causal analyses and corrective actions taken in response to significant events since January 1, 2003 identified that weaknesses existed in the causal analyses, corrective actions were narrowly scoped, and that there was a heavy reliance on endpoint assessments to evaluate the effectiveness of corrective actions. The Occurrence Reporting database was queried for reports filed since contract transition to WRPS. Of the eight reports filed, four were significance category 4 occurrences, which did not require any type of causal analyses or corrective actions. None of the other four reports requiring causal analysis and corrective actions were submitted as final within 45 days of categorization. One report, categorized on 10/9/08, was still not submitted as final as of 4/21/09. In events where human performance errors were identified, none of the cause codes had couplets identified. In one case, human performance was the single cause code identified, yet there were many unanswered questions based on the unavailability of records listed in the event investigation report. Delays in executing both the PISA and USQ process, in addition to completion of causal analyses appeared to be major contributors to the delays in submitting final occurrence reports.

MS-1.2 tasked the contractor to develop and implement an assessment plan to periodically evaluate the continued efficacy of the lessons learned program and corrective actions taken in response to significant events. The 5-SigPER CAP Strategy, Effectiveness Evaluations of Significant Event Corrective Actions, TFC-PLN-10 Rev E, and both the FY2008 and FY2009 integrated assessment schedules were reviewed. While the schedule contained ORP assessment activities of the lessons learned program, no such evidence could be found for the contractor. One activity, FY2009-ESHQ-M-0123 - Performance Assurance SMP, was found that discussed lessons learned, but did not provide any evaluation of the effectiveness of the program. The FY2009 schedule did contain evidence to support that WRPS is conducting assessments of corrective action effectiveness in regard to significant events.

The ORP review specified in MS-1.3 of the contractor evaluation conducted for MS-1.1, DOE-ORP Review of RPP-RPT-35553, Causal Analysis and Corrective Action Evaluation Report was reviewed and found to adequately summarize the effectiveness of the contractor review. However, a review of events since contract transition indicates a weakness in getting final reports submitted into the ORPS database in a timely manner.

The ORP Manager direction identified in MS-1.4 and transmitted to the contractor in Contract No. DE-AC27-99RL14047 - C-109 Readiness Assessment Expectations was reviewed and found to clearly establish Type A corrective action completion as a prerequisite to the restart of single shell tank retrieval operations at either S-102 or C-Farm.

Conclusions:

Implementation of TFC-PLN-10 did not result in specific assessments of the effectiveness of the lessons learned program as stated in CHG MS-1.2, although WRPS does include lessons learned effectiveness in several other management assessments. The contractor may benefit from including a programmatic assessment that evaluates the overall effectiveness of their lessons learned program that draws from those other various assessments and arrives at a collective program effectiveness determination.

The review of events since contract transition indicates a weakness in getting final reports submitted into the ORPS database in a timely manner. Delays in executing both the PISA and USQ process, in addition to completion of causal analyses appeared to be major contributors to the delays in submitting final occurrence reports. Additionally, information required in update reports including facility manager evaluation could be improved. Coordination between the contractor and DOE-ORP for closure of final occurrence reports needs to be strengthened.

Rating:

Effective

Recommendation for Completion:

None

Suggestions for Continued Improvement:

S-MS.1-1
WRPS should evaluate the occurrence reporting/causal analysis processes in order to improve compliance with the requirements of DOE M 231.1-2, and to improve the timely identification and completion of corrective actions for reportable occurrences.

S-MS.1-2
DOE-ORP and WRPS should collaboratively work to improve the timeliness of final occurrence report submittals.

S-MS.1-3
WRPS should update the FY2009 Integrated Assessment Schedule such that assessments evaluating the continued efficacy of the lessons learned program are conducted.

Reviewer:

Roger Claycomb, DOE-ID, Nuclear and Safety Performance Division

Corrective Action Evaluation Form
Type A JON MS-2

JON/Finding:
Type A MS-2, ORP and CH2M HILL need to improve S-102 waste retrieval oversight to ensure that nuclear safety and other safety requirements are met.

All corrective actions were reviewed except for DOE-MS-2.8 which was reviewed for effectiveness in JON CHG-ENG 2.0.

Documents Reviewed:

- Type A Accident Investigation Report, The July 27, 2007 Tank 241-S-102 Waste Spill at the Hanford Tank Farms
- Corrective Action Plan for Type A Accident Investigation Report
- FY2008-CH2M-1-0003, CH2M HILL Hanford Group, Inc. Independent Assessment of Corrective Action Plan Implementation for Tank 241-S-102 Waste Spill Investigation and Analysis Reports Midpoint Assessment
- FY2008-CH2M-I-0007, Corrective Action Plan Implementation for Tank 241-S-102 Waste Spill End Point Assessment
- 7-TF-018, Office of River Protection Investigation of ORP Actions related to the Tank S-102 Waste Spill
- Human Performance Improvement Review of the DOE Response to Tank S-102 Tank Waste Spill
- Assessment of ORP TF Oversight, (Gibbs Report)
- Letter of Direction to CH2M Hill and AMTF

Activities/Operations Observed:

Observed FRs in plan of the day meetings with the tank farm contractor and sat in on FR daily phone in meeting.

Interviews:

- DOE-ORP Quality Assurance
- Training Consultant to DOE-ORP
- DOE-ORP Tank Farms Facility Representative
- WRPS Quality Assurance Manager
- WRPS Performance Assurance/Corrective Actions Manager
- Director, Tank Farm Operations Division, DOE-ORP
- 222S Facility Representative

Results:

A review of the integrated assessment plans of WRPS and ORP shows an increased emphasis on oversight in general and waste operations specifically. WRPS Quality Assurance Services has assigned Quality Assurance Engineers to different projects and all are qualified to the WRPS program. An increased emphasis on waste transfers as well as maintenance on safety significant equipment and material is being shown. A review of the WRPS nonconformance reports (NCR) log and surveillance log shows an added emphasis in these areas.

Due to contractor changes and associated FR oversight activities, only one FR has been able to participate in offsite assessments and verifications. The requirement remains for each FR to participate in an offsite assessment and verification activities. The FR that has participated in assessments, readiness reviews, and ISM verifications stated that he feels this has been a positive learning experience and feel it has improved their overall skill set in performing oversight activities. Those thoughts are echoed by the FR Supervisor. It is suggested that reviewing participation in these activities be accomplished during annual program self assessments to assure all FRs are given the opportunity to meet these requirements.

A review of the Operational Awareness data base shows a significant increase in FR presence on the back shifts, and mid-shifts through unannounced oversight activities. While no significant findings were identified during the 45 unannounced visits, discussions with tank farm operations personnel showed that they were aware that FRs could show up anytime during operational activities. It is difficult to assess whether this practice has added to the operational effectiveness of the tank farm contractor but it has given new awareness and visibility to the FR program at the tank farms.

A review of the ORP integrated assessment plan and their internal schedule of surveillances by both engineering and QA organizations shows an increase in frequency of assessments and also shows improved contractor oversight of engineering, safety, health, and quality areas. There are also a number of oversight activities that are being performed that are not on the integrated assessment schedule which tends to show independent assessments such as audits. While this may be appropriate there may also be some benefits realized from placing all assessments on this schedule to highlight those areas of interest from ORP. Operational awareness oversight activities could still be accomplished as the needs arise and new priorities emerge.

A review of self ORP assessments performed in FY 2008 Strengthen the ORP internal assessment program to include a minimum of two internal assessments per year performed by ORP Environmental Safety and Quality staff. Self assessments A-08-ESQ-INTERNAL-002: *Self-Assessment of ORP Oversight Program,* A-08-ESQ-INTERNAL-001: *Office of River Protection, Federal Sub-Project Director,* A-08-AMTF-INTERNAL-009: *Facility Representative Program Self Assessment* and S-08-ESQ-INTERNAL-005: *Testing and Storage of HEPA Filters* were reviewed. The assessments were thorough and identified areas for compliance as well as for improvement activities and show an effective self assessment process.

ORP Quality Assurance has added two federal employees and two contractor staff to assist with program and oversight activities, operations has added four FRs (two are currently in the

certification process), and engineering has hired 5 engineers (29 total general engineering positions have been filled). One area that is of concern is that there is no occupational safety specialist listed on the organization chart with one position vacant.

Based on interviews and review of the ORP oversight schedule, the main source of ORP federal oversight at the tank farms seems to be the responsibility of the Facility Representatives. There is little routine presence from the SME staff (Quality Assurance, Industrial Hygiene, Radiation Control, and Safety). This places additional workload on the FR staff. ORP should consider increasing tank farm field presence of SMEs to strengthen field oversight, and to improve support to the FRs. This would result in more frequent interface with tank farm facility representatives and contractor personnel, and would strengthen the overall ORP oversight program.

All scheduled surveillance activities from QA do not appear on the integrated assessment schedule which tends to show only independent assessments such as audits. While this may be appropriate there may also be some benefits realized from placing all assessments on the integrated schedule to highlight those areas of interest from ORP.

A review of the existing contractor process hazard analyses and associated design features for retrieval systems to ensure nuclear safety and other safety requirements are met and evaluation of effectiveness is documented in JON CHG-ENG 2.0.

The assessment of the contractor actions to improve emergency preparedness and abnormal event response for retrieval activities were thorough and included oversight performed during the period March-June 2008 including one unannounced exercise on March 12, 2008, and the scheduled third quarter exercise on June 19, 2008. The assessment verified contractor actions were sufficient to close corrective actions associated with the S-102 emergency response activities.

Conclusions:

Overall, there has been marked improvement in oversight activities in response to the S-102 event. ORP has staffed up to meet oversight demands. The new tank operations contractor, WRPS, has placed increased emphasis on management and support staff (QA, Safety, Engineering, and Nuclear Safety and Management) oversight of retrieval, transfers, general operations, and maintenance activities.

Rating:

Effective

Recommendation for Completion:

None

Suggestions for Continued Improvement:

S-MS.2-1
ORP should increase tank farm field presence of SMEs to strengthen field oversight, and to improve support to the tank farm FRs.

S-MS.2-1
ORP should consider including all QA oversight activities (surveillances) on the integrated assessment schedule (those conducted beyond the established schedule are not normally added to the schedule once completed).

Reviewer:

Greg Hayward, DOE-ID, Nuclear Safety and Performance Division

Corrective Action Evaluation Form
EM-60 4.0

JON/Finding:
EM-60 4.0, The USQ process for the S-102 pump design change did not identify that the redesigned dilution water system and sparge system were "physically connected" to the waste transfer system without being properly isolated as required by the Technical Safety Requirements. Thus, installation of the S-102 pump design change without providing proper isolation of the dilution water and sparge systems from the waste transfer system constituted a violation of the Technical Safety Requirements. Questions about the understanding of "physically connected" to a waste transfer system had arisen earlier during design of water supply lines on other waste pumping systems with centrifugal pumps; these questions had not resulted in any clarification or proposed change to the Technical Safety Requirements.

Corrective Actions Reviewed:

CATPR-01:
Update definition of physically connected in DSA and TSR. In addition to addressing the specific issue with the definition identified in this report, this amendment will integrate changes required to address other leak paths that may not be covered in the current definition of physically connected, and any changes to waste transfer leak controls identified in corrective action ENG-4 of the U.S. Department of Energy Type A Accident Investigation Report for the 241-S-102 Waste Spill.

CATPR-03:
Provide training to Engineers, Operations Engineers, and Shift Managers.

Documents Reviewed:

- Letter Olinger to Fulton, 07-TF-029, *EM-60 Review Report: Hanford Tank S-102 Waste Spill Event, August 2007*
- CH2M-PER-2007-1370.5
- CH2M-PER-2007-1370.7
- Power Point Presentation, Training for Engineers and Operating Engineers, *The Importance of Literal Interpretations of Technical Safety Requirements*
- Letter Fulton to Olinger, CH2M-0800183 R3, Request for Approval of Safety Basis Amendment to Revise Applicability of Waste Transfer Controls, dated July 23, 2008
- TSR Lessons Learned Training for Engineers and OEs, Training Activity Number T07038, October 2007 Revision 00 (includes training roster)

Activities/Operations Observed:

None

Interviews:

- WRPS, Manager Nuclear Safety
- WRPS, Nuclear Safety and Licensing Engineer (3)
- WRPS Manager, Central Design Authority and Standards
- WRPS Engineering Program Specialist, Central Design Authority and Standards

A document review of the corrective actions and evidence files indicates adequate completion of the corrective action. Follow-up interviews were conducted to assess the effectiveness of the corrective actions. The results are that the corrective actions for CH2M-PER-2007-1370.5 and 1370.7 have been effective in addressing the finding.

Conclusions:

Interpretation of a TSR control and definition of "physically connected" was implicated in the design errors that allowed the S-102 leak to occur. Review of the revised safety basis documents indicates clarifications to the "physically connected" definition and the TSR controls have been completed. The power point presentation and lessons learned training provided to retrain contractor personnel on the revisions and the reason for the TSR violation was clear and concise. These corrective actions are judged to be effective.

Rating:

Effective

Recommendation for Completion:

None

Suggestions for Continued Improvement:

None

Reviewer:

Jacquelyn Carrozza, DOE-ID, Nuclear Safety and Performance

Corrective Action Evaluation Form
EM-60 6.0

JON/Finding: EM-60 (6)

Corrective Actions Reviewed:

EM-60 (6.1)
Issue a Just in Time Lessons Learned (JIT-LL) to all managers on the less than adequate extent of condition review performed for PER-2005-3379.

EM-60 (6.2)
Brief the ESRB on the lessons learned from the less than adequate extent of condition review for PER-2005-3379.

EM-60 (6.3)
Brief Corrective Action Management Operations Specialists on expectations for adequate extent of condition reviews.

EM-60 (6.4)
Conduct monthly Management Observation Program (MOP) assessment evaluating the quality of resolutions for PERs with Resolution, including the quality of extent of condition reviews, causal analysis and corrective action plans.

Documents Reviewed:

- Just in Time Lessons Learned 07-040, Extent of Conditions Reviews
- Executive Safety Review Board Meeting Minutes 2007-14 from August 30, 2007
- Apparent Cause Analysis Course Completion Roster from October 12, 2007
- Management Observation Checklist for *Quality of PER Extent of Condition and Apparent Cause Analysis*, dated October 31, 2007
- Management Observation Checklist for *Quality of PER Extent of Condition and Apparent Cause Analysis*, dated November 29, 2007
- Management Observation Checklist for *Quality of PER Extent of Condition and Apparent Cause Analysis*, dated December 27, 2007
- TFC-ESHQ-Q_C-C-01, *Problem Evaluation Request*, Rev E

Activities/Operations Observed:

None

Interviews:

- Operations Support Specialist
- Quality Assurance Engineer

Results:

The assessor verified the JIT-LL adequately identified the concern stated and provided reasonable lessons learned. He also verified, via meeting minutes, that the lessons learned were discussed with the ESRB in August 2007, and briefings were provided to Corrective Action Management Operations Specialists in October 2007.

Three Management Observation activities were conducted in consecutive months in 2007, to review the quality of PER extent of condition and apparent cause analysis. Each report identified improvement from the previous one. The final report, from December 2007, concluded, "This MOP indicates a significant improvement of the conduct and documentation of apparent cause analysis, although refresher briefings are required to bring the quality up to current expectations. Responsible managers are making a conscientious effort and the quality of the PERs with resolution will continue to be monitored."

A recent revision to TFC-ESHQ-Q_C-C-01 modified the PER process to integrate Performance Assurance. After the PER screening, Performance Assurance reviews the screen to validate the results. Further, upon completion of the corrective actions, Performance Assurance also validates satisfactory completion. Because the revision to TFC-ESHQ-Q_C-C-01 was issued March 24, 2009, effectiveness of the process change cannot be definitively measured, but the process has been in place informally for several months and quality improvements are being noted as a result.

Conclusions:

Corrective actions were completed as designated. TFC-ESHQ-Q_C-C-01 was recently revised to insert Performance Assurance into the process to assure process compliance and quality standards. This should drive continued improvement.

Rating:

Effective

Recommendation for Completion:

None

Suggestions for Continued Improvement:

None

Reviewer:

Kerry Schierman, DOE-RL, Facility Representative

Corrective Action Evaluation Form
EM-60 10.1

JON/FINDING:
EM-60 10.1 - As identified in the EM-60 Review Report, titled "Hanford Tank S-102 Waste Spill Event" item #EM-60-23 noted that, "According to contractor organization charts, the Closure Shift Operations Manager is not directly in the Chain of Command for the Closure Operations tank farm operators." This PER has been written to address this issue.

Corrective Actions Reviewed:

CA-1
Realign the CO organization such that persons performing waste retrieval transfer operations report to a single manager.

Documents Reviewed:

- PER-CH2M-PER-2007-1821
- Causal Analysis
- Final Report FY2008-CH2M-1-0003; CH2M HILL Hanford Group, Inc. Independent Assessment of Corrective Action Plan Implementation for Tank 241-S-102 Waste Spill Investigation and Analysis Reports Midpoint Assessment, February 11 - February 29, 2008.
- TO-220-113; Over-Ground Transfer from 241-C-110 to 241-AN-106 and Sluicing of Tank 241-C-110
- Standing Order CO-07-008, Original Revision; Chain of Command During Retrieval Operations
- Standing Order CO-07-008, Rev 8; C-110 Retrieval Operations
- Course # 35E043; Emergency Preparedness Post Drill Evaluation; Contaminated Worker C-Farm
- TFC-OPS-DRILL-004; Emergency Preparedness Post Drill Evaluation; Response to a Tank Waste Spill,
- Operational Readiness Checklist Single-Shell Tank 241-C-110 Waste Retrieval and Transfer to Double Shell tank 241-AN-106.
- Operational Awareness Database

Activities/Operations Observed:

- TFC-09-0439; Install new Drain Seal Assemblies in AZ-101/102A Pit
- WFO-WO-05-002807; Replace Chiller AZ-CW-R-1

Interviews:

- Operations Organization Manager
- Closure Operations Manager
- Closure Project Manager

- Operating Engineer
- Security and Emergency Services/Events Investigation personnel
- Mr. Jerry Long, CH2MHILL VP of Operations during the S-102 event
- Mr. Ted Jarecki, CH2MHILL Waste Feed Operations Shift Manager during the S-102 event

Results:

Analysis of the S-102 event determined that the Closure Operations organization structure reports up through three Operations Directors during a retrieval event. The analysis included an extent of condition, which was performed for other areas at the site. Waste feed operations reported through one position at the time of the event, and was an example of the benefits of a single contact roll-up position, which was conducive to clear concise communications and help to ensure overall good conduct of operations. Organizational changes were made to realign the closure organization to report to one person. An Operational Awareness Database entry validates these changes were made, which the assessors verified during the review. Other changes were made to help streamline the organization, such as consolidating both shift managers' offices into a single shift office at MO-268, which eventually included consolidation of work release into the same office.

The assessor reviewed Standing Order CO-07-008, Rev 8, which clarified the Chain of Command for the activity of performing retrieval operations and differentiates it from the management chain of the Retrieval Operations Organization as follows:

> "During Modified Sluicing, the Chain of Command is from the Retrieval Operations Engineer, to the Base Operations Senior Shift Manager. During any off-normal response, this same Chain of Command is to be followed. The Retrieval Operations Engineer will provide information and guidance, but the Base Operations Shift Manager will be the final authority of any path forward."

The Standing Order has been expanded in scope since originally issued. When originally issued in November of 2007, its title reflected its sole purpose, "Chain of Command During Retrieval Operations", which was limited to addressing these changes. At the time of this assessment, 8 revisions have been issued, and the scope of the Standing Order has been expanded to also include retrieval control requirements, including radiological monitoring information, Senior Supervisory Watch information, and the use of cameras during tank waste retrievals.

Revision 8 of the Standing Order also did not include any wording to indicate when or how it will be cancelled. The original Standing Order contained words to this effect -- "this Standing Order will remain in force until a formal organizational change is implemented and the new organizational structure and necessary procedure changes are reviewed by the Chief Operating Officer and determined to satisfy the issue identified in CH2M-PER-2007-1821". Discussions with the interviewees indicate that the current Standing Order will remain in effect through the C-110 retrieval period, after which it will be cancelled. During the next retrieval project, the Standing Order will either be reinstituted per a prerequisite in the retrieval procedure, or the requirements and direction from the Standing Order will be incorporated directly into the retrieval procedure. Using a standing order format is beneficial in that it is easily changed, which provides flexibility. This plan was not in writing, but the contractor has committed to

performing a level 3 Readiness Assessment prior to the next retrieval operation, scheduled at C-104. The level 3 RA will include an Operational Readiness Checklist, which is the correct vehicle for ensuring the Chain of Command requirements are clearly outlined either in a Standing Order or the retrieval procedure. A check of the Operational Readiness Checklist for the C-110 project showed that the roles and responsibilities were discussed in separate line items, one of which reads,

> "**Roles, responsibilities and reporting relationships** have been established for safe accomplishment of work related to the project/activity (via administrative procedures, organization charts, position descriptions, training programs, and internal memoranda)

Interviews with personnel showed a strong knowledge of the Chain of Command requirements during retrieval. The Closure Operating Engineer indicated that he was provided training on the proper Chain of Command during retrieval.

The assessors also interviewed emergency drill personnel, and reviewed drill reports, which indicated that the Chain of Command changes were also tested during abnormal event drills. The drill reports reviewed showed that the changes made to consolidate shift managers offices, and the training and method of employing the new organizational requirements was effective.

Conclusions:

The Standing Order which incorporated the requirements for the Chain of Command is an effective method of codifying the requirements. The requirements have been employed via training, and drills have verified the effectiveness of the changes.

Rating:

Effective

Recommendation for Completion:

None

Suggestions for Continued Improvement:

S-EM-60 10.1-1
Standing Order 07-008 should be revised to include a statement directing the length of time the Standing Order will remain in effect, and how the requirements of the order will be captured for future projects.

Reviewer:

Ron Ciola, DOE-ORP, Facility Representative

Corrective Action Evaluation Form
EM-60 11.0

JON/Finding:
EM-60 11, (Pages 7-8 of Enclosure to DOE-ORP Letter 07-TF-029, *EM-60 Review Report: Hanford Tank S-102 Waste Spill Event, August 2007*)

When Waste Transfer operations were commenced during the dayshift prior to the spill, the S-102 pump was started with the discharge valve closed because the specific step in the operating procedure to ensure the discharge valve was open was not performed. As a result the pump tripped. Waste transfer operations were recommenced about 30 minutes after the mispositioned valve was discovered, without performing an immediate critique of the event on shift.

The operating procedure states that high discharge pressure may result in pump damage. The pump is a positive displacement pump, which is capable of developing very high discharge pressure when operated with the discharge valve shut. There was no detailed assessment of the potential pump or waste transfer system damage performed prior to restarting the pump and commencing waste transfer.

Corrective Actions Reviewed:

CH2M-PER-2007-1299.1: Engineering perform and document a review of this event, as related to potential piping stress between the S-102 pump and the V-106 valve, including the V-106 valve to determine if any equipment damage resulted.

Documents Reviewed:

- TF-07-025, *Technical Evaluation for the S-102 Riser 7 Seepex Retrieval Pump*

Activities/Operations Observed:

None

Interviews:

- Acting Manager, West System Engineering, Washington River Protection Solutions

Results:

A document review of the corrective actions and evidence files indicates adequate completion of the corrective action. Follow-up interviews were conducted to assess the effectiveness of the corrective actions. The results are that the corrective actions for CH2M-PER-2007-1299.1 have been effective in addressing the finding.

Conclusions:

The EM-60 Review Report discussion concerning procedure execution issues was addressed separately via CH2M-PER-2007-1737 as part of the response to JON-ENG-1 of the DOE Type A Investigation. The engineering analysis of the overpressure event showed that the pump, valve V-106, and all discharge piping and hose components were designed and tested for pressures well in excess of the pressure actually developed during the event. There was no damage to them. After the event, DOE decided to abandon the Seepex pump and pursue waste retrieval in Tank S-102 using different technology. Hence the piping and electrical systems for the Seepex pump were removed and there will be no further use of the piping or valve manifold. The corrective actions are considered effective in resolving the EM-60 trip report issue.

Rating:

Effective

Recommendation for Completion:

None

Suggestions for Continued Improvement:

None

Reviewer:

Earl Hughes, DOE-HQ, Office of Health, Safety and Security

Corrective Action Evaluation Form
RCA JON-5

JON/Finding:
RCA JON-5,
RC-01 – Engineering Design Less Than Adequate (LTA)
The S-102 WRS design process was deficient. Specifically, LTA hazards evaluation that did not address the potential waste transfer misroute accident scenario in the DSA. Additionally, the design was not re-evaluated following the radiological contamination of support systems in C Farm in 2005.

Several changes to processes and hardware were made starting in late 2002 that culminated in the installation and operation in S-102 of a WRS that was not designed to prevent or contain a waste leak from a raw water supply hose. Other changes, such as a revision to CH2M HILL's Water Quality Standard in 2004, changes in S-102 retrieval system configurations, and modifications to the Seepex pump were not adequately evaluated.

RC-02 – Management of Change LTA
The change in reverse pump motor speed from 15 to 45 Hz which increased suction cavity pressure by a factor of nine, the strainer plate configuration which reduced the available inlet/outlet surface area by greater than 50%, and relocation of the dilution line output port in Seepex #2 were not adequately analyzed. Although efforts were made to analyze the changes made between to two pumps, the process used was informal and the results were not reviewed or approved by S-Farm managers.

When Seepex #1 was in operation, a rotary viper was installed in Riser 2 approximately two feet from the pump suction in order clear the pump suction and to provide an area of waste slurry around the suction. When Seepex #2 was installed, the rotary viper was removed and a camera was installed in Riser 2. The lack of ability to maintain a cavity or pool around the pump suction was not adequately evaluated.

JON-5: Conduct Contractor Readiness Assessment for retrievals prior to resuming operations.

Corrective Actions Reviewed:

JON-5.1
Update the Startup Notification Report (SNR) to require Level 2 Readiness Assessments prior to commencing the first retrievals in S-Farm (S-102) and C-Farm (C-109) and a Level 3 Readiness Assessment for the C-104 retrieval. Obtain DOE ORP approval of the revised SNR.

JON-5.2
Conduct Level 2 Readiness Assessment for tank 241-S-102 retrieval. Withdraw justification: The level of required Readiness Assessment has been identified in the Startup Notification Report and will be updated based on project schedules.

JON-5.3
Conduct Level 2 Readiness Assessment for tank 241-C-109 retrieval.

JON-5.4
Conduct Level 3 Readiness Assessment for tank 241-C-104 retrieval. Withdraw justification: The level of required Readiness Assessment has been identified in the Startup Notification Report and will be updated based on project schedules.

Documents Reviewed:

- CH2MHILL Letter CH2M-0303291.16 Reissue, Quarterly Startup Notification Report (SNR), dated September 26, 2007
- DOE-ORP Letter 07-TOD-100, SNR Approval, dated September 27, 2007
- CH2MHILL Letter CH2M-0303291.17, Quarterly SNR, dated December 20, 2007
- CH2MHILL Letter CH2M-0303291.18, Amended SNR, dated February 6, 2008
- DOE-ORP Letter 08-TOD-018, SNR Approval, dated February 19, 2008
- CH2MHILL Letter CH2M-0303291.19, Quarterly SNR, dated March 20, 2008
- DOE-ORP Letter 08-TOD-034, SNR Approval, dated March 31, 2008
- CH2MHILL Letter CH2M-0303291.20, Quarterly SNR, dated June 25, 2008
- DOE-ORP Letter 08-TOD-063, SNR Approval, dated July 8, 2008
- CH2MHILL Letter CH2M-0303291.21, Quarterly SNR, dated August 15, 2008
- DOE-ORP Letter 08-TPD-067, SNR Receipt Acknowledgment, dated September 29, 2008
- WRPS Letter WRPS-0800239, Quarterly SNR, dated December 10, 2008
- DOE-ORP Letter 08-TPD-094, SNR Approval, dated December 22, 2008
- WRPS Letter WRPS-0900325, Clarification of Commitment for a Readiness Assessment to Start Retrieval From Single-Shell Tanks 241-C-110 and 241-C-104, dated March 16, 2009
- WRPS Letter WRPS-0900385, Quarterly SNR, dated March 18, 2009
- DOE-ORP Letter 09-TPD-024, SNR Approval, dated March 30, 2009
- *Contractor Readiness Assessment Report for the Single Shell Tank 241-C-109 Waste Retrieval Resumption and Deployment of FOLDTRACK Mobile Retrieval Tool*, Rev 1, dated May 8, 2008

Activities/Operations Observed:

None

Interviews:

- Construction and Commissioning Operational Readiness Lead
- Quality Assurance Engineer

Results:

The corrective actions designated utilized the startup process readiness reviews to verify engineering design and management of change processes were functioning adequately for subsequent retrieval design activities. Although that process has proven successful in identifying issues and returning them for correction prior to authorization for startup, using readiness reviews as a quality control mechanism was not the optimal long-term method to establish quality. Recognizing this, the Contractor also designated JON-2 to provide detailed guidance/criteria for the CH2M HILL oversight of subcontracted engineering design including input and output documents, and JON-6 to adopt a Management of Change process similar to that described in Occupational Safety and Health Administration (OSHA) standard 29 CFR 1910.119, *Process Safety Management of Highly Hazardous Chemicals*.

The initial SNR issued following the event met the conditions specified in JON-5.1. A Readiness Assessment was completed for tank 241-C-109, as specified (JON-5.3). However, subsequent SNR reports withdrew specific Readiness Assessment designations for 241-S-102 and 241-C-104 retrieval activities. Correspondingly, JON-5.2 and JON-5.4 were withdrawn, justified by a statement that readiness activities had been identified in the SNR and would be updated based upon project schedules, via that vehicle. 241-S-102 retrieval activity was removed from the SNR in September 2008, based upon no intention to initiate the activity in Fiscal Year 2009. 241-C-104 was removed from the SNR in March 2009, based upon approval of an Activity Description that designated an Operational Readiness Checklist as the appropriate level of readiness validation. DOE-ORP approved each of the SNR changes via letter.

Regardless, corrective actions designated for JON-2 and JON-6 were completed, establishing the more appropriate mechanisms to validate engineering design and manage change within those processes, restoring the readiness review process to verification activity. JON-2 corrective actions were validated elsewhere in this report. JON-6 corrective actions were validated via equivalent corrective actions for Type A ENG-2, also elsewhere within this report.

Conclusions:

The corrective actions taken to address RCA JON-5 were adequate to assure short-term success in establishing quality in engineering design and change management. Long-term success will be measured by the effectiveness of JON-2 and JON-6, which were not evaluated for JON-5, but were evaluated elsewhere within this report (see above discussion). This corrective action is being designated as effective as it proved an acceptable method for ensuring engineering design and management of change were acceptable in the specific short-term applications designated.

Rating:

Effective

Recommendation for Completion:

None

Suggestions for Continued Improvement:

None

Reviewer:

Kerry Schierman, DOE-RL, Facility Representative

Corrective Action Evaluation Form
RCA JON-8

JON/Finding:
RCA JON-8, CC-01 – Formality of Operations LTA - The potential for tank waste to migrate into tank-connected retrieval support systems in C-Farm was identified in 2005; however the documented extent of condition review for that issue was not reviewed by Operations. This was a missed opportunity to identify and correct the system configuration. This and other examples of informality and LTA implementation of Conduct of Operations (COO), such as not maintaining an S-Farm shift log, and imprecise communications, combined to create a culture that resulted in failure to recognize the initial indications of the spill.

JON-8 – Perform Human Performance Improvement (HPI) review of waste transfer operating procedures

Corrective Actions Reviewed:

JON-8.1.2 – Utilizing workers who perform transfers and at least two qualified HPI champions revise at least 3 transfer procedures to incorporate lessons learned from the S-102 leak event.

JON-8.1.3 – Incorporate the lessons learned from completion of action JON 8.1.2, into procedure TFC-OPS-OPER-C-13 (Technical Procedure Control and Use) to enhance implementation of HPI philosophy.

Documents Reviewed:

- TFC-OPS-OPER-STD-01 rev A-2, *Technical Procedure Format and Preparation Standard*;
- TFC-OPS-OPER-STD-01 rev A-4, *Technical Procedure Format and Preparation Standard*;
- A-6002-909 (REV 3), *Verification/Validation (V&V) Checklist*;
- A-6002-909 (REV 6), *Verification/Validation (V&V) Checklist*;
- TO-220-110, A-7, *Over Ground Transfer From 241-C-108 to 241-AN-106 and Sluicing of Tank 241-C-108*
- TO-220-112, B-O, *Over Ground Transfer From 241-C-109 to 241-AN-106 and Sluicing of Tank 241-C-109*
- TO-XXX-XXX, A-O (DST to DST Transfer Template), *SENDTANK TO RECEIVE TANK*
- TO-220-113, A-10, *Over-Ground Transfer from 241-C-110 to 241-AN-106 and Sluicing of Tank 241-C-110*;
- TFC-OPS-MAINT-C-01, rev N-9, *Tank Operations Contractor Work Control*;
- A-6004-102 (04/06), *Team Review Meeting Checklist*;
- TFC-WO-0x-xxxx, *Closure Operations Work Control Template*

Activities/Operations Observed:

None

Interviews:

- Retrieval and Closure Work Control Manager
- ESH&Q SST Manager

Results:

The evidence files and documentation for JON-8 corrective actions 8.1.2 and 8.1.3 indicated that all corrective actions have been adequately completed and closed out. The JON 8.1.2 file contained three waste transfer procedures that were reviewed and revised; however, it was unclear as to what specific S-102 lessons learned were actually incorporated. The current ESH&Q SST Manager led the review and explained that a meeting with S-102 operators and managers was held to discuss what changes were needed for subsequent transfer procedures. The intent of the meeting participants was to identify problems with the S-102 transfer procedure and to address them in changes to the three transfer procedures. The file also contained comments and improvements to the procedures identified during the review with the HPI checklist.

The JON 8.1.3 corrective action evidence file contained highlighted changes to the *Verification and Validation (V&V) Checklist* and changes to procedure TFC-OPS-OPER-STD-01, *Technical Procedure Format and Preparation Standard*. The corrective action identified that lessons learned from the completion of action JON 8.1.2 would be incorporated into procedure TFC-OPS-OPER-C-13, *Technical Procedure Control and Use*. Changes to this procedure were not required since changes to TFC-OPS-OPER-STD-01, *Technical Procedure Format and Preparation Standard* were more applicable. This determination appeared appropriate since procedure development is where HPI error prevention techniques should be incorporated. Changes made to TFC-OPS-OPER-STD-01 rev A-2, *Technical Procedure Format and Preparation Standard* included adding the concept of "critical task" and clarification of verb usage (e.g., "ensure"). These changes have been maintained in the latest revision.

The current C-110 retrieval procedure was reviewed and it contained appropriate identification of critical tasks, Warning statements and Caution statements. The procedure is generally well written.

In the current revision to Form A-6002-909 (REV 6), *Verification/Validation (V&V) Checklist* the Technical Authority section no longer contains checklist item, "Have critical tasks been identified?" This item was on revision 3 as a corrective action and there was no evidence or justification for its removal.

Procedure TFC-OPS-MAINT-C-01, rev N-9, *Tank Operations Contractor Work Control* was not part of the evidence file but was reviewed to assess if HPI error prevention techniques are considered for work instructions. Warning and Caution statements are addressed among other

things, but there is no guidance for critical tasks. However, the *Closure Operations Work Control Template* and *Team Review Meeting Checklist* provided evidence that work instructions address critical tasks.

Conclusions:

Although the assessor was unable to determine if specific, applicable lessons learned from the S-102 leak event were incorporated into the revised waste transfer procedures (no crosswalk was developed or maintained), the waste transfer procedures reviewed contained appropriate identification of critical tasks and are well written. Procedure TFC-OPS-OPER-STD-01, *Technical Procedure Format and Preparation Standard* contained adequate guidance for incorporating critical tasks and other error prevention techniques. The V&V checklist was generally adequate; however the critical task checklist item identified in JON-8.1.3 was not maintained for the Technical Authority. Finally, a template for critical tasks is part of the work instruction development process and is reviewed in team meetings; however, the guidance in TFC-OPS-MAINT-C-01, *Tank Operations Contractor Work Control* does not address critical task in the work instruction writer's guide.

Rating:

Effective

Recommendation for Completion:

None

Suggestions for Continued Improvement:

S-RCA-JON-8-1
Form A-6002-909, *Verification/Validation (V&V) Checklist* should be updated to require the Technical Authority to ensure critical tasks have been identified.

S-RCA-JON-8-2
Procedure TFC-OPS-MAINT-C-01, *Tank Operations Contractor Work Control* should contain critical task guidance.

Reviewer:

Joe Sondag, DOE-ORP, Facility Representative

Corrective Action Evaluation Form
RCA JON-9

JON/Finding: RCA JON-9

CC-02 – Radiological Controls Survey Techniques LTA
Open window beta radiation readings were not taken during initial indication of HRA, and a review of survey records indicate that this is a widespread problem.

Had beta radiation measurements been taken the leak may have been identified at about 0200 on July 27.

JON-9 – Conduct training for HPTs, RadCon FLMs, and Radiological Engineers on the expectations for the conduct and recording of radiological surveys and on the conduct of RadCon deficiencies.

Corrective Actions Reviewed:

JON 9.1 – Issue Lessons Learned regarding S-102 radiation monitoring deficiency pertaining to failure to perform both window open and window closed radiation measurements.

JON 9.2 – Brief Health Physic Technicians & First Line Managers on Just in Time/Lessons Learned 07-037 and procedural requirements to perform Window Open and Window Closed radiation measurements when performing radiation monitoring.

JON 9.3 – Revise RO-20 On the Job Training to include guidance from RO-3B On the Job Training regarding instrument operating technique to begin radiation measurements with the window open.

JON 9.4 – Brief Health Physics Technicians and Radiological Control First Line Managers on revised RO-20 On the Job Training.

JON 9.5 – Revise Oral Board/Performance Demonstration scenarios to require Health Physics Technicians to monitor both window open and window closed radiation levels.

JON 9.6 – Perform assessment within the Radiological Control Projects to verify radiation surveys include both window open and window closed readings including a review of 10% of radiological survey reports completed for the previous three months to verify window open and window closed readings were documented and Deep Dose Equivalent and Shallow Dose Equivalent readings were accurately calculated.

JON 9.7 – Incorporate process to evaluate and document radiation monitoring requirements (including evaluation of the need for Area Radiation Monitoring) into procedure TFC-ESHQ-RP_ADM-P-01, "Radiological Monitoring During Waste Transfers and Waste Pump Maintenance Activities".

JON 9.7.1 – Brief end users on revised TFC-ESHQ-RP_ADM-P-01, Radiological Monitoring During Waste Transfers and Waste Pump Maintenance Activities procedure and associated TSR leak detection and Radiological Control monitoring requirements.

JON 9.7.2 – Review all active waste transfer procedures and revise, as necessary, according to revised version of TFC-ESHQ-RP_ADM-P-01 "Radiological Monitoring During Waste Transfers and Waste Pump Maintenance Activities".

Documents Reviewed:

- Just in Time/Lessons Learned 07-037, (*Closed Window Radiation Readings May Be Only Half the Story*)
- HPT attendance rosters for S-102 Lessons Learned briefing
- RCT Site Generic OJT Program, OJT Instructor Guide and Student Guide for Course Number 022503, Task 022503 – *Operation of the Eberline RO-20 Survey Meter*
- Activity Tracking Information Sheet and the OJT Briefing Material for RO-20 On the Job Training
- HPT Course Completion Rosters for OJT Briefing Material for RO-20 On the Job Training
- CH2M Hill Interoffice Memorandum, 79A00-LML-08-018, *Scenario Review*
- CH2M Hill Interoffice Memorandum, 79A00-LML-08-015, *Radiological Control Oral Examination Board Personnel*
- CH2M Hill Management Assessment FY2008-SHQ-S-0343, *Verification of Window-Open and Window-Closed Radiation Readings*
- Lesson Plan for Course # 351038, *Radiological Monitoring for Waste Transfers*
- Training Course Materials for #351038 Rev. 0801.0, *Radiological Monitoring for Waste Transfers*
- Course completion roster for *Radiological Monitoring During Waste Transfers Course 351038*
- *241-C-110 Transfer Survey Worksheet*
- Training materials for course number 356431, *HPT Radiological Monitoring for Waste Transfers – Walkdown Checklist*
- Training Materials for course number 356429, *HPT Radiological Monitoring for Waste Transfers – Classroom*
- Internal Memorandum WRPS-0900119, dated January 20, 2009, *Completion of Training Requirements for Health Physic Technician Support of 241-C-110 Retrieval Operations*
- RPP-PLAN-35830, rev. 5, *Radiological Control Monitoring Plan for Tank 241-C-110 to Tank 241-AN-106 Waste Transfer*
- Task No. COO-VAR6, Rev.2, *Radiological Control Scheduled Radiation Survey Task Description*
- Radiological Survey Reports: COC 001465, COC 001467, COC 001476, COC 001477, COC 001479, COC 001480, COC 001481, COC 001487, COC 001488 and COC 001491
- TO-220-113, *Over-Ground Transfer from 241-C-110 to 241-AN-106 and Sluicing of Tank 241-C-110*
- TFC-ESHQ-RP_ADM-P-01, *Radiological Monitoring During Waste Transfers and Waste Pump Maintenance Activities*

Activities/Operations Observed:

- Radiation surveys performed by HPTs using the RO20 during 241-C-104 construction work and 241-C-110 Install/Remove Ops Cameras at Risers 3 & 6.
- Briefing and field walk down of the 241-C-110 to 241-AN-106 waste retrieval system for HPTs in training for C-110 retrieval operations (course number 356431, "HPT Radiological Monitoring for Waste Transfers – Walkdown Checklist.")

Interviews:

- Radiological Controls First Line Supervisors (3)
- Health Physics Technicians (7)

Results:

The evidence files and documentation for JON-9 corrective action 9.1 through 9.7 indicated that all corrective actions have been adequately completed and closed out. Corrective actions to address less than adequate survey techniques included a briefing to existing HPTs on the S-102 Lessons Learned and the HPT instructor and trainee guides for operating the RO-20 were updated. In addition, training was implemented for the Technical Safety Requirement monitoring requirements, radiological controls requirements and potential indications of waste confinement failure for HPT monitoring on the waste transfer system.

During C-104 construction work and the camera work in the C-110 risers, proper use of the RO-20 was observed by HPTs and they were knowledgeable of the importance of the beta window open measurement. Two qualified HPTs and their first line supervisor covered the Radiological Monitoring Plan during a field walk down of the C-110 waste transfer system with newly assigned HPTs. Survey locations, anticipated dose rates and the upset condition dose rates were discussed. The field walk down appeared to be an effective tool for the HPT trainees since indications of a waste leak were discussed in detail.

Radiological Survey Reports reviewed for C-110 retrieval indicated that beta window open dose rate surveys were conducted. However, four of the 10 RSRs contained transcription errors. For example, on RSR COC 001467, a beta correction factor of "0.6" was entered instead of "2" and on RSRs COC 001465, 001479 and 001491 neutron dose rate values were entered; however, neutron surveys were not performed. Survey data collected in the field is documented on the 241-C-110 Transfer Survey Worksheet, an uncontrolled document, and this information is transcribed to the RSR form.

Conclusions:

The corrective actions taken to address RCA JON-9 were adequate to assure that HPTs are trained on the proper survey techniques when using the RO-20 gamma radiation survey instrument. The HPT training and qualification materials were updated to reflect the need for a Beta Window Open measurement and for HPTs to discuss the importance for it. Additionally, the HPT Radiological Monitoring training for waste transfers and walk down checklist provided examples of what could be an indication of a leak. This corrective action is being designated as effective based on the rigor of the training provided for existing qualified HPTs and for new HPTs assigned to waste retrieval operations. However, the 241-C-110 Transfer Survey Worksheet should be reviewed or controlled to preclude errors.

Rating:

Effective

Recommendation for Completion:

None

Suggestions for Continued Improvement:

S-JON-9-1
The 241-C-110 Transfer Survey Worksheet should be a controlled document/form to ensure that transcription errors are prevented.

Reviewer:

Joe Sondag, DOE-ORP, Facility Representative

Corrective Action Evaluation Form
RCA JON-13

JON/Finding: RCA JON-13

CC-06 – Training LTA
Maintenance and RadCon personnel supporting S-102 retrievals were unfamiliar with the process. Had RadCon personnel supporting the project been made aware of the fact that 80 mrem/hr on contact with the riser extension was the maximum estimated radiation levels during normal operations, then the 200 mrem/hr indication at 10-12 feet should have prompted immediate reporting of the spill.

JON-13: Develop and conduct training for designated operations support personnel involved in the operation, maintenance, and monitoring of process equipment.

Corrective Actions Reviewed:

JON-13.1 – A training needs analysis for operations and support personnel involved in the operation, maintenance, and monitoring of waste transfer and retrieval process equipment, including but not limited to operating parameters and alarm response, expected radiological and toxicological indications during normal and upset conditions, system construction and operations is required. Revise training needs analysis process to ensure that operations and all affected support personnel are included in this process.

Documents Reviewed:

- TFC-BSM-TQ_ADD-C-01, *Training Analysis, Design and Development*, Rev E-1, E-2, and E-4;
- CH2M HILL Required Reading List for TFC-BSM-TQ_ADD-C-01, Rev E-1;
- RPP-PLAN-38530, *Radiological Monitoring Plan for Tank 2741-C-110 to Tank 241-AN-106 Waste Transfer*, Rev 5
- Operations and Support Personnel Qualification Cards

Activities/Operations Observed:

Work Orders:

TFC-09-1566	242A HVAC HMI Loss of Power Alarm Troubleshooting Package
WFO-07-3186	Electrical Repair in AN Farm
TFC-09-0439	Install new Drain Seal Assemblies in AZ-101/102A Pit
WFO-05-2807	Replace Chiller AZ-CW-R-1
CLO -07-0729	Remove Jumpers from C-104 pit
WFO-07-3186	241-AN Repair Lighting and Replace Disconnects
TFC-08-1285	C-110 Install/Remove Ops Cameras at Risers 3 & 6

Briefing and field walk down of the 241-C-110 to 241-AN-106 waste retrieval system for HPTs in training for C-110 retrieval operations (course number 356431, "HPT Radiological Monitoring for Waste Transfers – Walkdown Checklist.")

Interviews:

- Central Design Authority and Standards Engineer
- C Farm Retrieval and Closure Work Control Manager
- Construction Workers
- Field Work Supervisors
- Industrial Hygiene Manager
- Industrial Hygienists
- Maintenance Crafts Persons
- Radiological Control Technicians
- Senior Supervisory Watches
- Single Shell Tanks Radiological Controls Manager
- Training Manager
- Training Specialists
- Technical Development and Deployment Manager

Results:

The issue/action statements for the JON identified the need for (a) a training needs analysis for operations and support personnel; (b) a revision to the training needs and analysis process; and (c) develop and conduct training for support personnel. Of these three specified actions only a revised training needs analysis procedure was specified as a deliverable. Since the deliverable for the specified addressed only item (b), the closure evidence file contained only that information.

TFC-BSM-TQ_ADD-C-01 was initially revised (Rev E-1) to identify the need for training needs analyses and to ensure the analysis process included subject matter experts from support organizations. The assessor verified the document revision had been issued.

It was also noted, however, that the change put into TFC-BSM-TQ_ADD-C-01 was later removed in Rev E-4 of the document. The assessor discussed this condition with the Training Manager, who stated the Root Cause Analysis directed change had been removed as part of a recent overhaul of the training analysis, design and development process. The specific step was removed because he considered the action had now been incorporated into their process, and therefore maintaining the step as written was redundant. Subsequent review of training analyses indicated the procedure remained effective.

Despite the corrective actions for items (a) and (c), above, not being designated as deliverables and therefore not in the closure evidence file, the assessor validated completion of each action.

The assessor was provided a demonstration of the Vision database, used to document training needs analyses and resultant training requirements for Tank Farms technical personnel, and

specifically for support functions that were cited in the JON. The resultant qualification cards viewed appeared to cover areas identified in the JON. The custodian of the database indicated the analyses and cards were being enhanced on an ongoing basis.

Training of Industrial Hygiene personnel was verified by Type A HE-1, and Radiological Controls personnel training was verified by RCA JON 9.5 and Type A WC-3. The assessor also discussed changes made to training requirements as a result of the S-102 event with the Training Manager, the Radiological Controls Manager, and the Central Design Authority and Standards Engineer who had been involved in the Engineering organizations training needs assessment process. They each demonstrated knowledge of changes that had been considered appropriate for their organizations due to the S-102 event and how the changes had been incorporated into organizational training processes.

Multiple assessors also observed field activities to measure personnel competencies and knowledge through discussions/interviews.

When the Executive Safety Review Board (ESRB) agreed to close this item at their meeting of November 29, 2007, they identified that support staff needed training and had not been included. They assigned an action to specifically formalize the process for Engineering to review training packages and carried it as an open ESRB action. The corrective action was implemented by the original TFC-BSM-TQ_ADD-C-01 change discussed above. The ESRB agreed to close their item at their January 24, 2008, meeting.

Conclusions: Although the closure evidence file was not considered complete to address the identified issue (see Suggestion for Continued Improvement below), effectiveness of corrective actions was able to be assessed. Corrective actions taken to conduct training needs analyses, change training requirements, and upgrade the needs analysis process were considered effective. Personnel knowledge was also considered adequate.

Rating:

Effective

Recommendation for Completion:

None

Suggestions for Continued Improvement:

S-RCA JON-13.1-1
Actions that comprehensively address the issue(s) identified in the CH2MHill Root Cause Analysis Report JON 13 should be included in the closure evidence files.

Reviewer:

Lead, Kerry Schierman, DOE-RL, Facility Representative
Jack George, DOE-RL, Facility Representative Program Manager
Joe Sondag, DOE-ORP, Facility Representative
Ron Ciola, DOE-ORP, Facility Representative

Corrective Action Evaluation Form
ER & HE PERs

JON/Finding:
ER & HE PERs – Issues with Emergency Response and Health Effects identified during various Tank Farm Contractor Assessments.

Corrective Actions Reviewed:

7-1493
Event Response and Health Effects PERs, TF-AOP-006 and TF-AOP-011 procedures lack guidance in responding to an unknown High Radiation Area.

7-1494
Event Response and Health Effects PERs, Training is required for the ERO personnel and affected organizations on Lessons Learned and resultant procedure changes.

7-1495
Event Response and Health Effects PERs, As a result of the Emergency Management S-102 Event Response Review, Emergency Management is to review the Event response with Fluor Hanford (FH) Emergency Management for site applicability/Lessons Learned and incorporate any resultant changes into subsequent Emergency Management training.

7-1496
Event Response and Health Effects PERs, Timely response was delayed while necessary re-entry plans were developed and approved. Evaluate/develop pre-planned and approved re-entry, investigative and habitability surveys for and with both IH and HPT involvement.

7-1497
Event Response and Health Effects PERs, As a result of the Emergency Management S-102 Event Response Review, the current IH support for shift manning, IH Hazard Assessor support for event response and IH knowledge of the Incident Command system should be evaluated. Determine best practices and integration with HPT response for future events.

7-1498
Event Response and Health Effects PERs, When the Event Coordination Team (ECT) "page" was initiated at the Federal Building Emergency Operations Center (EOC), the page notification did not reach the CH2M HILL Technical Support personnel as expected. There is not a current CH2M HILL process to maintain the ECT response page list current for CH2M HILL contractor representative and technical representative personnel.

7-1500
Event Response and Health Effects PERs, As a result of the Emergency Management S-102 Event Response Review a significant delay was found in sending out the initial "pager" notification for an "abnormal event" per TFC-OPS-OPER-D-01, Event Notification matrix until additional resources were available in the WFO Shift Office. Given the new "pager" system implemented, this process should be simplified to aid the Shift Manager.

7-1501
Event Response and Health Effects PERs, As result of the Emergency Management S-102 Event Response Review, it was found that during the S-102 High Radiation Area event (HRA), personnel were brought in to provide access to the Single shell tank farm surveillance cameras in an effort to observe S-102 for indications of the source of the HRA. At the time, the WFO Shift Manager did not have access.

7-1503
Event Response and Health Effects PERs, As a result of the Emergency Management S-102 Event Response Review, the focus was primarily on TF-AOP-006 and TF-AOP-011 Abnormal Response procedures. The lessons learned of this event should be reviewed against all of the TF-AOP's for any required changes. In addition, the current AOP's and their approach should be compared against best practices by other facilities and industry.

7-1525
Event Response and Health Effects PERs, In the S-102 Health Effects Investigation, there was a need to quickly identify potentially affected individuals. The management survey conducted was not timely and was initially inaccurate which required substantial rework. This survey was conducted for an event that occurred on a normal day off. This would have been further complicated if performed for a normal work day.

7-1815
Event Response and Health Effects PERs, Additional Collection of Data: Toxicologists and Medical Experts recommend collection of additional environmental and field samples to aid in the future analysis of worker health effects. Increase of the level of industrial hygiene monitoring and surveillance for post-event dose reconstruction.

Documents Reviewed:

- TF-AOP-006, *Response to High Radiation, rev c-5*
- TFC-OPS-EP-D-04, *Emergency Management Program Assessment Plan Guidance*
- TFC-ENG-DESIGN-C-36, *Hazards Assessment Consequence Calculation Process*
- FY2008-CH2M-I-0007, *Corrective Action Plan Implementation for Tank 241-S-102 Waste Spill End Point Assessment*
- FY2008-CH2M-I-0003, *S-102 Midpoint Assessment*
- DOE Order 151.1C, *Comprehensive Emergency Management System*
- DOE G 151.1-2, *Technical Planning Basis*
- Training Activity TO7043 - *IH Role in Abnormal Events*
- Training Activity TA-07041 - *Job Hazard Analysis Process*
- Training Activity TA-08041- *EM - Identification of Exposed Personnel*
- Training Activity TO801 8 - *Case Manager Coordination w/AMH*
- Training Activity TO7044 - *Tank Farm Vapor Information Sheet*
- Training Activity TO8028 - *IH Sampling for Waste Transfer/Retrieval for Potential Abnormal Events*
- Training Activity - *Dose Reconstruction IH Sampling for Waste Transfer Abnormal Events*
- Training Course 3571 03 - *Cycle 3 Industrial Health Technician Continuing Training*

- TF-AOP-003, *Response to Elevated Airborne Radioactivity, Rev.* B- 7
- TF-AOP-0 11, *Response to Chemical and/or Radiological Events, Rev. C-1*
- TF-AOP-015, *Response to Reported Odors or Unexpected Changes to Vapor Conditions, Rev. B-18*
- TF-AOP-018, *Response to Electrical, Water, Air, or Pressurized Gas Cylinders High Energy Release, Rev.* B-2
- TFC-ESHQ-S-CMLI-C-0 1, *Injury and Illness Recordkeeping, Rev. C-2*
- TFC-ESHQ-S - CMLI-C-02, *Injury and Illness Events, Rev.* B-2
- TFC-ESHQ-S CMLI-CD-03, *Workers Compensation Program, Rev. C*
- TFC-OPS-OPER-CD-01, *Event Notification, Rev. A*
- TFC-ESHQ-S IH-C-46, *IH Reporting and Records Management, Rev. B-1*
- Standing Order CO-07-009, *Industrial Hygiene Dose Reconstruction Sampling for Waste Transfer and Retrievals*
- Standing Order WFO-07-006, *Industrial Hygiene Dose Reconstruction Sampling for Waste Transfer and Retrievals*
- *Shift Office On-Call List,* RPP-IP-0732, release 135

Activities/Operations Observed:

- April 7, 2009 AP Tank Farm High Efficiency Particulate (HEPA) Filter Failure Drill
- April 7, 2009 Radiological Waste Container Handling Accident Drill
- April 16, 2009 Emergency Preparedness C-110 Tabletop Drill

Interviews:

- IH Technician (2)
- Electrician (3)
- Nuclear Chemical Operator (2)
- Manager, IH Programs
- Manager, Training
- Manager, Security & Emergency Services/Events Investigation
- Manager, Shift Operations
- Manager, Senior Shift
- Coordinator, Emergency Preparedness
- DOE Facility Representative, ORP
- HAMTEC Safety Representative

Results:

The effectiveness review for ER & HE PERS included reviewing the eleven corrective actions (CA), select aspects of their closure documentation, how the CAs were implemented, and if the corrective actions will be effective in preventing recurrence of the deficiencies identified in these PERs.

TF-AOP-006 and TF-AOP-011 procedures were modified to provide more guidance in responding to an unknown High Radiation Area. All other TF-AOP's were reviewed and updated to reflect lessons learned of this event. The ERO personnel and affected organizations (in-house and Site-wide) were trained on Lessons Learned and the resulting procedure changes. There were significant issues pager notification and personnel call in processes for this event. There was an overall effort to improve IH and HPT response to tank waste spills. This included pre-planned and approved re-entry investigative and habitability surveys, IH support for shift manning, IH Hazard Assessor support for event response, and IH knowledge of the Incident Command system. Some potentially affected individuals were not quickly identified and there was need for additional environmental and field samples to aid in the future analysis of worker health effects. Both the updated and current procedures were reviewed. The procedure changes, training rosters, and class materials were reviewed. Also the results of the drills and personnel interviews verified the changes and training was effective.

Conclusions:

The document review and interviews have shown that the corrective actions tasks associated with the TF contractor, AdvanceMed Hanford (AMH) and the Fluor Hanford (FH) Emergency Preparedness organizations supporting this Finding were complete, effective and sustainable.

Rating:

Effective

Recommendation for Completion:

None

Suggestions for Continued Improvement:

None

Reviewer:

Jack George, DOE-RL, Facility Representative, Program Manager
Courtney Blanchard, DOE-ORP, Facility Representative

Corrective Action Evaluation Form
DOE ORP SA: ALL

JON/Finding: DOE ORP Self Assessment - All

Corrective Actions Reviewed:

DOE SA-1
Conduct an HPI investigation into the ORP response to the S-102 event.

DOE SA-2
Provide a detailed briefing to all Tank Farm FRs on expectations and requirements for contractor event evaluation and reporting, including: management's direction to designate senior staff as the acting TOD Director in the absence of the TOD Director, EM notification requirements and expectations for notification to ORP senior management, maintaining knowledge of work activities planned on backshift and weekends, ensure sufficient information is provided by the contractor during event notifications, and clarify expectations for event follow-up.

DOE SA-3
TOD Director will assign senior, experienced TOD staff as Acting Director of TOD in the absence of the TOD Director (once the HPI review is completed, a formal corrective action will be defined and implemented as determined necessary by the HPI review).

DOE SA-4
Develop corrective action plan for the HPI review once the review is completed.

DOE SA-5
Obtain contractor engineering resources to support the TED so that mission critical SSCs can be included in the review and oversight process.

DOE SA-6
Conduct a joint, DOE/contractor evaluation of the TFC's engineering organization, process, and procedures, including subcontractors, and include a review of the design/design review process for mission critical SSCs as well as safety-related SSCs.

DOE SA-7
In coordination with the TFC, develop a clear, concise definition of "physically connected" in the DSA for the tanks farms, and approve the contractor-submitted safety basis amendment.

DOE SA-8
Revise the FRIs to provide detailed guidance and direction to on-call FRs for evaluating event notifications, including: management's direction to designate senior staff as the acting TOD Director in the absence of the TOD Director, EM notification requirements and expectations for notification to ORP senior management, maintaining knowledge of work activities planned on backshift and weekends, ensure sufficient information is provided by the contractor during event notifications, abnormal event criteria, conservative decision making, and clarify expectations for event follow-up.

DOE SA-9
Revise the Tank Farm FR qualification cards to require an oral interview with the TOD Director on management expectations for the on-call FR, including FRI-specific requirements and guidance.

DOE SA-10
Develop an interim resource point of contact list to summarize (and make available to the person acting) contact information for event response resources and notification requirements.

DOE SA-11
Develop a desk instruction or other formal means to summarize (and make available to the person acting) contact information for event response resources and notification requirements, including management expectations for conservative decision-making, event action levels (or notification thresholds), and notifications to outside agencies (including DOE-HQ, Washington State Departments of Health and Ecology, etc.)

Documents Reviewed:

- 7-TF-018, Office of River Protection Investigation of ORP Actions related to the Tank S-102 Waste Spill (Pfaff Report)
- Human Performance Improvement Review of the DOE Response to Tank S-102 Tank Waste Spill
- U.S. Department of Energy (DOE), Office of River Protection (ORP) Corrective Action Plan (CAP) in Response to Self-Assessments of DOE Response to the S-102 Tank Waste Spill on July 27,2007
- Assessment of ORP TF Oversight, (Gibbs Report)
- HNF-SD-WM-TSR-006, Rev. 6-A, Definitions
- ORP M 151.1, Revision 0, DOE ORP Event Notification Procedure
- Weekly ORP Weekend Senior Management Availability List, 4/18/2009
- Engineering Design Program Review, September 2007
- FRI-006, Revision 6, ORP Facility Representative Instruction Facility Representative Responsibilities and Routine Activities
- ORP Facility Representative Functional Area Qualification Record and Facility Specific Qualification Standard and Record, Revision 6
- ORP FY2008 Assessment Schedule

Activities/Operations Observed:

None

Interviews:

- WRPS - Chief Engineer
- DOE-ORP - Tank Farm Operations, Director
- DOE-ORP - ESQ, Assistant Manager
- DOE-ORP, Facility Representatives (2)

Results:

The HPI investigation from SA-1 was reviewed and found to adequately assess organizational weaknesses at ORP that contributed to the event. A corrective action plan was developed per SA-4 and considered effectively executed.

Interviews with ORP Facility Representatives indicated that the contents of the detailed briefing regarding the expected actions for event notification as stated in SA-2 were clear and provided the necessary detail to respond to future events.

SA-3 established an expectation that the TOD director would delegate authority to only senior, experienced TOD staff as the acting director.

The Chief Engineer for WPRS was interviewed regarding contractor engineering staffing as stated in SA-5. At the time of the S-102 event, CH2MHILL had 113 of 126 positions filled. When questioned about the adequacy of current staffing, he stated that their most critical shortage had been the lack of any HVAC engineering staff due to a retirement. WPRS has hired a new HVAC engineer, and has also hired four "rotational engineers" who are hired as entry-level engineers that rotate through the various engineering groups in order to develop them for positions of higher responsibility. He stated that WRPS would also be hiring eight additional engineers as part of the Recovery Act surge. These are intended to be more experienced than the "rotational engineers," but will also rotate as they finish projects rather than according to a fixed time schedule.

The joint evaluation of the TFC engineering organization documented in Engineering Design Program Review, September 2007, called for in SA-6 was reviewed and determined to accurately assess the health of the organization. Meaningful recommendations were made and current conditions indicate that WRPS is continuing to pursue acquiring the needed staff to support operations.

SA-7 called for a revised definition of "physically connected" in the tank farm safety basis document. The TSR document was reviewed and found to contain adequate language to clarify the term.

FRI-006, Revision 6, ORP Facility Representative Instruction Facility Representative Responsibilities and Routine Activities was reviewed and found to contain adequate direction in regard to event response and notification as identified in SA-8. The FR qualification card revision was also reviewed and found to contain supporting oral interviews to reinforce that expectation as specified in SA-9.

Weekly Management Availability e-mails have been implemented which are distributed to key personnel and provide contact information should an event occur as stated in SA-10.

ORP M 151.1, Revision 0, DOE ORP Event Notification Procedure was written to provide the means to convey duties and responsibilities for DOE personnel for event response such that personnel acting on behalf of others are aware of the expectations as stated in SA-11.

Conclusions:

Actions taken in regard to the DOE ORP self-assessment have been effective.

Rating:

Effective

Recommendation for Completion:

None

Suggestions for Continued Improvement:

None

Reviewer:

Roger Claycomb, DOE-ID, Nuclear Safety and Performance Division

Corrective Action Evaluation Form
EM-62 OP.1 F-1

JON/Finding:
EM-62 OP.1 F-1, The Tank Farm Contractor Conduct of Operations Safety Management Program Owner does not assess implementation of all DOE Order 5480.19 Attachment 1 Chapters.

Corrective Actions Reviewed:

OP.1 F-1 CA.1
Conduct a Management Observation Program (MOP) assessment of the implementation of the assessment requirements outlined in TFC-PLN-32 and provide results to the SMP owners.

OP.1 F-1 CA.2
Conduct interviews with SMP owners to confirm that program health assessment frequency requirements of TFC-PLN-32 are effectively understood.

OP.1 F-1 CA.2(a)(1)
Complete a review of the Conduct of Operations Program to assess compliance with DOE Order 5480.19 and TFC-PLN-32.

OP.1 F-1 CA.2(a)(2)
Add a Management Assessment to the FY09 Assessment Schedule to perform a Conduct of Operations Management Assessment to include Chapters 2, 5, 13, 14, and 16 of DOE Order 5480.19 listed in the Conduct of Operations matrix.

OP.1 F-1 CA.2(b, c)
Perform a management observation (MOP) of the SMP assessment schedules and completion rates.

OP.1 F-1 CA.2(c. d)
Revise FTC-PLN-32 to require a periodic assessment of the SMP process, including owner knowledge and completion of required assessments.

OP.1 F-1 CA.2(d)
Provide training to Safety Management Program (SMP) owners on their roles and responsibilities as discussed in TFC-PLN-32.

Documents Reviewed:

- MOP-08-08-03, *Corrective Action (PER-2008-0989, E-STARS Task CH2M-PER-2008-0989.2)*
- Interoffice Memorandum 7J000-08-RLH-010, dated June 20, 2008, *Safety Management Program Assessments*

- FY2008-CH2M-I-0002, Independent Assessment of Waste Feed Operations: Waste Transfer Operations Management Systems, dated December 10, 2007 – January 31, 2008
- TFC-PLN-05, *Conduct of Operations Implementation Plan*, Rev C-5
- TFC-PLN-10, *Assessment Program Plan*, Rev E
- TFC-PLN-32, *Tank Operations Contractor Safety Management Programs*, Rev B-20
- TFC-PLN-100, *Tank Operations Contractor Requirements Basis Document*, Rev A
- TFC-ESHQ-AP-C-01, *Management Assessment*, Rev E-6
- August 2008, Conduct of Operations Safety Management Program presentation to the Executive Safety Review Board
- FY2009 WRPS Integrated Assessment Schedule, Rev 4, dated February 25, 2009
- FY2009 WRPS Integrated Assessment Schedule, Rev 6, dated April 14, 2009
- Safety Management Program briefing materials from December 9, 2008 and associated course completion rosters
- Conduct of Operations Management Assessment FY2008-OPS-M-0120

Activities/Operations Observed:

- Conduct of Operations Sensitivity Training provided by C Farm Retrieval and Closure Manager
- Conduct of Operations Council Meeting

Interviews:

- Base Operations, Operations Manager
- Industrial Hygiene Manager
- Procedures Manager
- Quality Assurance Engineer
- Shift Operations Manager
- Training Manager

Results:

A Management Observation Program (MOP) assessment of the implementation of the assessment requirements in TFC-PLN-32, including assessment schedules and completion rates, was conducted, and results reviewed with Safety Management Program (SMP) managers. A MOP assessment of SMP manager knowledge of type, purpose, and frequency of TFC-PLN-32 SMP assessments was also conducted. Additionally, training was provided to the SMP managers in December 2008, on their roles and responsibilities as defined in TFC-PLN-32. The assessor validated SMP manager knowledge through the interview process. Finally, a revision to TFC-PLN-32 to periodically assess SMP manager knowledge and completion of assessments required by the plan through a MOP activity was also verified to have been completed.

A Conduct of Operations assessment was conducted in August 2008, with the results being presented to the Executive Safety Review Board. Overall program health was graded as "good," eleven chapters were also evaluated as "good," five chapters as "marginal," one chapter

(Equipment and Piping Labeling) as "poor," and one chapter as "not applicable." Trends from a previous assessment were also provided.

Management assessments were added to the FY2009 WRPS Integrated Assessment Schedule for DOE 5480.19, Attachment I Chapters II and V for June 2009, and Chapters XIII, XIV, and XVI for August 2009. Discussions with the Shift Operations Manager indicated all of the previously identified chapters, including Chapter IX were currently being assessed. He further intends to assess all remaining chapters of Attachment I in May to support certification for Phase II of Integrated Safety Management. At that point, an evaluation will be made to redistribute future assessments to be consistent with both TFC-PLN-05 and TFC-PLN-32 periodicity requirements.

Conclusions:

The evidence files appeared complete and auditable. The corrective actions put in place appear to have been effective in correcting deficient conditions identified, and processes have been put in place to periodically review effectiveness on an ongoing basis. In addition, activities currently in progress to verify readiness for Integrated Safety Management Phase II declaration have accelerated some of the assessment activities. Because both programs (Conduct of Operations and Safety Management Programs) are assessed biennially, and in some cases triennially, sustained effectiveness must be evaluated over some time.

Rating:

Effective

Recommendation for Completion:

None

Suggestions for Continued Improvement:

None

Reviewer:

Kerry Schierman, DOE-RL, Facility Representative

Corrective Action Evaluation Form
EM-62 CA.1 F-2

JON/Finding:
ORP verification of contractor corrective actions for the S-102 CAP has not been adequately performed.

All corrective actions were reviewed

Documents Reviewed:

- Type A Accident Investigation Report, The July 27, 2007 Tank 241-S-102 Waste Spill at the Hanford Tank Farms
- Corrective Action Plan for Type A Accident Investigation Report
- FY2008-CH2M-1-0003, CH2M HILL Hanford Group, Inc. Independent Assessment of Corrective Action Plan Implementation for Tank 241-S-102 Waste Spill Investigation and Analysis Reports Midpoint Assessment
- FY2008-CH2M-I-0007, Corrective Action Plan Implementation for Tank 241-S-102 Waste Spill End Point Assessment
- Human Performance Improvement Review of the DOE Response to Tank S-102 Tank Waste Spill
- Assessment of ORP TF Oversight, (Gibbs Report)
- Letter of Direction to CH2M Hill and AMTF
- Integrated Assessment Program, ESQ-OA-IP-01 R1

Activities/Operations Observed:

None

Interviews:

- DOE- ORP Quality Assurance
- DOE-ORP Tank Farms Facility Representative
- WRPS Quality Assurance Manager Engineer (support services contractor)
- Director, Tank Farm Operations Division, DOE-ORP

Results:

The S-102 Corrective Action Plan (CAP) verification plan was revised based on recommendations from EM-62 as well as ORP internal comments. Additional expectations were incorporated for planning of verification and closure activities.

Corrective action # CA-2 stated, "Brief affected DOE personnel on the revised S-102 CAP Verification Plan to ensure requirements and expectations are clearly understood." Closure of this action was completed based on reviews by ORP and support staff. However, the attendance

roster or materials for these briefings cannot be located. Based on interviews and independent reviews of the roster and briefing materials all indications point to an acceptable closure.

S-102 verified closure packages were reviewed by ORP management and placed into the IDMS. This shows review of verification packages is complete and shows proper execution.

The S-102 effectiveness verification assessment (of which this form and subsequent report is a part) will close this particular action prior to resumption of retrieval operations at C-109.

Integrated Assessment Program, ESQ-OA-IP-01 R1 issued 1/21/2009 was revised to limit corrective action verification closure to federal staff (DOE support contractors may assist with verification, but federal staff must review and accept closure). 6.2.9 assigns closure verification responsibility to federal SMEs or the assessment team leader. This revision to the assessment instruction adequately addresses this issue.

Conclusions:

Review of the S-102 CAP and subsequent changes to that CAP and the associated documentation, shows comprehensive verification activities performed by ORP management and staff. These additional verification activities adequately address the issues raised by EM-62 in their review of ORP verification activities.

Rating:

Effective

Recommendation for Completion:

None

Suggestions for Continued Improvement:

None

Reviewer:

Greg Hayward, DOE-ID, Nuclear Safety and Performance Division

Corrective Action Evaluation Form
EM-62 OP.1 F-2

JON/Finding:

EM-62 OP.1 F-2, Shift Managers demonstrated less than adequate familiarity with Technical Safety Requirements (TSR) modes of operations and how to implement TSR Required Actions.

Corrective Actions Reviewed:

CA.1
Perform evaluation and changes to TSR-006, Section 1.6, to update or remove the SST MODES to address related issues identified in this PER.

CA.2
Complete updates of necessary implementing procedures to related to the NS&L changes to TSR-006, Section 1.6, in action #1 of this PER to support management expectations on effective documentation of MODE changes.

CA.3
Complete briefing to all OE/SM qualified personnel on issues in this PER as well as management expectations on demonstrating TSR compliance.

CA.4
Complete management observation to confirm continued effective understanding of management expectations from action #3 as well as effective knowledge related to actions #1 and #2

CA.5
Revise the ORP Integrated Assessment Schedule for the ORP Tank Farm Facility Representatives to evaluate contractor Nuclear Chemical Operator, Operation Engineer, and Shift Manager safety basis level of knowledge on a quarterly basis when conducting TSR Implementation surveillances.

(a.1)1 Complete Management Expectations Training on Demonstrating TSR Compliance (CH2M-PER-2008-0960 & CH2M-PER-2008-0992).

(a.1)2 Complete Documented Safety Analysis (DSA) and TSRs Overview Training Briefings for designated operations and engineering personnel.

(a.1,2) WRPS issued Management Control Plan for Tank Farms Operational Turnover (29633-PM-PLN-0001) on 9/11/08 to define roles and responsibilities at transition to ensure safe and effective operation of the Hanford Tank Farms under the Tank Operations Contract. Per the MCP, mentoring and feedback is provided (Base Operations and SST Retrieval/Closure) on management expectations through the use of the Hazard Review Board (HRB) and Senior Supervisory Watch (SSW). HRB and SSW programs have identified areas for improvement.

(c) Schedule performance-based assessments of the Shift Manager TSR knowledge and ability to use them.

(a,2)(c)Conduct a performance-based evaluation of the effectiveness of TSR knowledge and compliance elements of the Shift Manager initial qualification, re-qualification, and continuing training programs.

(b) Verify that all (100%) OE/SM qualified personnel have been briefed on issues in CH2M-PER-2008-0960, as well as management expectations on demonstrating TSR compliance.

Documents Reviewed:

- HNF-SD-WM-TSR-006; Tank Farm Technical Safety Requirements
- RPP-13033; Tank Farm Documented Safety Analysis
- CH2M-PER-2008-0992
- CH2M-PER-2008-0960
- CH2M-PER-2008-0992 Corrective Actions and Deliverables
- CH2M-PER-2008-0960 Corrective Actions and Deliverables
- Presentation Materials Documenting Safety Basis Amendment 051
- TFC-OPS-OPER-C-01; Technical Safety Requirement Compliance
- Operational Awareness Database Item 4853, Interview of Shift Manager, 11/26/08
- Course Number 350929; Self-Study Guide for TFC Technical Safety Requirements
- Shift Manager Operational Logbook
- Tank Farm Abnormal Operating Procedure 3; Response to Elevated Airborne Radioactivity
- Tank Farm Abnormal Operating Procedure 21; Response to Tank Farm Ventilation Upset

Activities/Operations Observed:

- Observed Shift Manager Perform Duties

Interviews:

- Operations Shift Manager
- Operations Organization Manager
- Shift Managers
- Training Specialists
- Tank Operations Division Director

Results:

The issue of retention of knowledge of Safety Basis requirements was addressed via initial training conducted after the S-102 event. The training's effectiveness was periodically checked by Facility Representatives in the Tank Operations Division with varying results.

The assessors reviewed Operational Awareness Database entries and interviewed individuals to determine the effectiveness of the safety basis training. Emergency Response Evaluation reports were reviewed, but showed that the emergencies scenarios were selected to follow the Abnormal Operating Procedures and Emergency Response Procedures vice the TSRs. For instance, the scenario that evaluated the response to an elevated flammable gas level in a waste tank provided that the level was at 18 percent LFL, below the 25 percent required to ender the Limiting Condition for Operation.

An interview with the Tank Operations Division Director gleaned that Facility Representatives were performing knowledge checks on the Shift Managers on a periodic basis. The assessor's review of Facility Representative interviews have shown few isolated weaknesses were detected during these interviews. The Facility Representative reviews covered various TSR subjects, including administrative locks and administrative controls. An excerpt from a typical Facility Representative entry is as follows:

> "The FR interviewed a SM regarding his knowledge of the Nuclear Safety Basis. We discussed various aspects of waste transfers. We discussed various safety basis requirements for waste transfers and where/how they apply. Specifically, we discussed leak detectors and their surveillance requirements, requirements and basis for material balances, what is a MBD, and what to do if it is exceeded. We also discussed requirement for pit covers, double valve isolation, back flow preventers, and DST ventilation including surveillance requirements. He was knowledgeable of all these topics. He was also knowledgeable of the difference between General Service, Safety Significant, and Safety Class, and knew that we have no Safety Class SSCs in tank farms. He was also knowledgeable of the current commercial grade dedication issue with MCS and its associated red arrow entry. I was pleased with this SM's knowledge of the Safety Basis. No deficiencies were identified. This surveillance satisfies this month's EM-62 surveillance requirement for evaluating a SM for Safety Basis knowledge."

The assessor identified that Tank Farm Contractor TSRs training had been developed and provided to Shift Mangers. Twenty-nine of the thirty-four individuals slated for the course have attended this training, which consisted of a four-hour training session followed by a written exercise/assignment to be completed at the conclusion of the training session. At the culmination of the training and completion of the assignment, each Shift Manager is to sit through an oral board with the Operations Shift Manager and Operations Organization Manager. Once the Shift Managers are trained and pass their boards, the plan is to include the Operating Engineers on the next round of training and examination. The assessor noted that there is no plan for continued training to promote retention of knowledge.

The assessor conducted interviews to determine retention of knowledge from the TSR training materials. The knowledge check indicated an adequate level of knowledge from the Operations Shift Manager and the Operations Organization Shift Manager. The Shift Manager interview discussed several TSR issues directly related to the S-102 event, such as, changes to HNF-SD-WM-TSR-006; *Tank Farm Technical Safety Requirements and* RPP-13033; *Tank Farm Documented Safety Analysis,* concepts of physical connection and disconnection, modes of operation, evaluation of ancillary equipment that could cause leaks during a waste transfer, miscellaneous equipment at tank farms prohibited from operation, accident scenarios, entering Abnormal Operating Procedures and several work control and hazard analysis. The Shift Manager displayed a weak understanding of where to locate information in the Documented Safety Analysis, and tended to rely on operational procedures to screen Tank Farm activities, some of which were clearly unauthorized by the TSRs. Overall the level of knowledge of the Shift Manager was adequate, and given the use of the TSRs, he was able to satisfactorily answer most questions. Of note, the individual had recently attended the Tank Farm Contractor Technical Safety Requirement training that was being administered to the Shift Manager crews.

Conclusions:

Training efforts since the S-102 event have been ongoing. The level of knowledge of the Shift Managers is adequate. Due to the technical nature of the material, and to promote retention, the training should be continued at a certain periodicity as determined by knowledge checks.

Rating:

Effective

Recommendation for Completion:

None

Suggestions for Continued Improvement:

S-EM-62 OP.1 F-2-1
The Tank Operations Contractor should incorporate continuing training on Technical Safety Requirements for Shift Managers; training should include the basis for each TSR, and information from the DSA including relevant accident scenarios and unmitigated consequences.

Reviewer:

Ron Ciola, DOE-ORP, Facility Representative

Corrective Action Evaluation Form
EM-62 OP.1 F-4

JON/Finding:
EM-62 OP.1 F-4, TFC-OPS-OPER-C-13, *Technical Procedure Control and Use*, allows for procedure writers to incorporate changes resulting from field validation without subsequent USQ evaluation.

Corrective Actions Reviewed:

CA.1
Revise procedure TFC-OPS-OPER-C-13 to delete paragraph 4.4.24, which allows for procedure changes when a procedure has already been processed during the construction or modification of a system that has not been field validated (and issued a LL Bulletin).

Documents Reviewed:

- Just In Time, RPP Lessons Learned No. 07-042, *Approval of USQ Evaluations Must Reflect Final Documentation*
- TFC-OPS-OPER-C-13, *Technical Procedure Control and Use*
- CH2M-PER-2008-0995 and Barrier Analysis
- FY2008-CH2M-1-0003, *CH2M HILL Hanford Group, Inc., Independent Assessment of Corrective Action Plan Implementation for Tank 241-S-102 Waste Spill Investigation and Analysis Reports – Midpoint Assessment*
- CH2M-PER-2008-0703
- Administrative Document Change Authorization for TFC-OPS-OPER-C-13/F8, *Technical Procedure Control and Use*
- *Engineering Required Reading (RR-07-041/2838)- Assigned to the USQ Evaluators*

Activities/Operations Observed:

None

Interviews:

WRPS Lessons Learned Coordinator

Results:

Problem Evaluation Request CH2M-PER-2008-0995 initiated a corrective action to remove Paragraph 4.4.26 [4.4.24 is a typo] from procedure TFC-OPS-OPER-C-13, *Technical Procedure Control and Use*, to address Finding OP.1 F-4. However, the corrective action to remove paragraph 4.4.26 was first initiated by CH2M-PER-2008-0703, due to CH2M Hill's FY2008-CH2M-1-0003 Independent Assessment finding MPA-04. The proposed procedure change was documented in the Administrative Document Change Authorization for TFC-OPS-OPER-C-13/F8, *Technical Procedure Control and Use* and CH2M-PER-2008-0703 (but not CH2M-PER-

2008-0995). Neither PER identified the other for the same corrective action. Nonetheless, the procedure was appropriately revised and contains adequate requirements for ensuring that an Unreviewed Safety Question evaluation is completed for procedure changes.

The Just In Time Lessons Learned, No. 07-042, *Approval of USQ Evaluations Must Reflect Final Documentation*, contained useful information, but it is questionable to take credit for it as a corrective action since it was issued prior to Finding OP.1 F-4. Engineering personnel reviewed the Lessons Learned as required reading.

Conclusions:

The evidence files did not provide a clear record for how procedure TFC-OPS-OPER-C-13 was revised. A review of the IDMS procedure history files was required to determine how the procedure was revised. The Lessons Learned provided useful information; but was not issued in response to the finding. Despite these issues, the corrective action for removing paragraph 4.4.26 was effective.

Rating:

Effective

Recommendation for Completion:

None

Suggestions for Continued Improvement:

None

Reviewer:

Joe Sondag, DOE-ORP Facility Representative

Corrective Action Evaluation Form
EM-62 OP.1 SO-1

JON/Finding:
EM-62 OP.1 SO-1, The Work Release Meeting is not effective at scheduling or communicating the status of work.

Corrective Actions Reviewed:

(a) 1
WRPS issued Management Control Plan for Tank Farms Operational Turnover (29633-PM-PLN-0001) on 9/11/08 to define roles and responsibilities at transition and addresses all operations issues identified during due diligence reviews.

(a) 2
TFC-OPS-MAINT-C-01, Tank Operations Contractor Work Control, Section 4.11.1, defines the process for developing a Daily Release Sheet/Status. The status of planned/on-going work is communicated regularly via the Base Operations conference call, operations turnover, and Plan of the Day meetings. Review of HRB documentation and SSW MOPs indicate this as an effective method of scheduling and communicating.

Documents Reviewed:

- Hanford Site River Protection (CH2M HILL Hanford Group, Inc.) EM-62 Assessment Report, March 2008
- PER 08-0341.7
- PER 08-0997
- PER 08 0341.7 Corrective Actions and Deliverables
- PER 08-0997 Corrective Actions and Deliverables
- Shift Manager Operational Logbook
- Tank Farm Abnormal Operating Procedure 3; Response to Elevated Airborne Radioactivity
- Tank Farm Abnormal Operating Procedure 21; Response to Tank Farm Ventilation Upset

Activities/Operations Observed:

- Contractor Plan of the Day Meetings
- Contractor Plan of the Day Meetings
- Contractor Morning Status Meetings
- Contractor Daily Release Sheet Meetings
- TFC-09-0439; Install new Drain Seal Assemblies in AZ-101/102A Pit
- WFO-WO-05-002807; Replace Chiller AZ-CW-R-1
- TFC-09-1566-242A HVAC; HMI Loss of Power Alarm Troubleshooting Package
- WFO-07-3186; 241-AN; Repair Lighting and Replace Disconnects

- TFC-09-1519; 242-A, Dynamic Test Raw Water Pressure Control Valves
- Table Top Drill of Retrieval Operations Emergency Procedures

Interviews:

- Operations Shift Manager
- Operations Organization Manager
- Shift Managers
- Training Specialists
- Tank Operations Division Director

Results:

As documented by the EM-62 review report (Hanford Site River Protection (CH2M HILL Hanford Group, Inc.) EM-62 Assessment Report, March 2008), the EM-62 assessment team members attended work release meetings on three days to evaluate the work release process and identify which activities to observe that day. On five occasions, EM-62 team members attempted to observe work that was discussed during the meeting only to find that the work was not going to be performed for a variety of reasons. It was not clear to the EM-62 assessment team members why work would be listed and discussed at the meeting if it was not going to be worked as scheduled. The EM-62 assessment team determined that this was a poor practice and brought into question the effectiveness of the tank farm contractor's work planning and status processes.

Since the EM-62's finding, the Tank Farms Operations Contractor has somewhat revised it's approach to work planning and work status. In addition to the Daily Release Sheet meetings and Plan of the Day meetings held at both Tank Farms Double Shell Tanks and Closure Operations areas, there is now a Morning Status Meeting held in each of these respective areas. The schedule of the work planning, release and status meetings is as follows: At 6:45 the Daily Release Sheet Meetings are held. These meetings Review the Daily Report and the Daily Release Sheet. The First Line Supervisors discuss the Daily Release Sheet work items, and resources are confirmed to be committed to the work. A time and place for a prejob brief is scheduled if not already on the release sheet. The Planning and Engineering organizations are also there to support the work discussions.

The second round of meetings each morning is held immediately after the Daily Release Sheet Meeting. The 7:15 morning status meetings allow the Facility Managers to provide status on their facility activities. This meeting usually lasts until 7:45 or 8 AM. Finally, there are Plan of the Day meetings held at 2:30 PM each day to communicate the status of work from the first line supervisors to the schedulers, who are preparing the next day's release sheet.

During the current assessment, the team members attended these daily meetings. Although good information was put out at the meetings, similar problems to those cited by EM-62 continue (in that work execution problems exist). That is, a large portion of work slated for completion during the morning's Daily Work Release meeting did not occur that day. Examples include work performed in the AZ farm to replace the drain plugs in pits. Although TFC-09-0439,

Install new Drain Seal Assemblies in AZ-101/102A Pit, work was briefed and started on time, incorrect plug sizes prevented the plugs from being installed. The Field Work Supervisor appropriately stopped the job since the procedure did not allow them to back out once the problem was detected.

An electrical job in the AN farm, WFO-07-3186, *241-AN, Repair Lighting and Replace Disconnects,* was also cancelled because worker qualifications did not support the work as equipment operator qualifications were not found on file.

The test of raw water control valves, TFC-09-1519, *242-A, Dynamic Test Raw Water Pressure Control Valves*, was cancelled because the work document needed a change. The job was expected to work within an hour (9 AM). It ended up working about 12 hours later.

The assessors also observed work where the job had to be stopped due to an inadequate Troubleshooting Plan. TFC-09-1566, *242A HVAC HMI Loss of Power Alarm Troubleshooting Package*, could not proceed past the first step. It appeared an adequate walk down had not been performed before the Troubleshooting Plan was prepared. As a result, the plan was not consistent with the equipment alignment in the field.

Note that the assessors also observed a job where the Troubleshooting Plan was workable, and was prepared in accordance with the requirements. It should be noted that the work replacing the AZ chiller unit, WFO-WO-05-002807; Replace Chiller AZ-CW-R-1 successfully proceeded within the bounds of the work control envelope, using first a Troubleshooting Plan and then a minor standing work document for Instrumentation Troubleshooting and Repair. This work was accomplished with minor delay.

After several failed attempts to observe work via the Daily Release Sheet meeting information, one assessment team member noted that the most successful way he was able to observe work in the field was to report to a shop area, where the workers would eventually lead them to a job being worked.

Conclusions:

Although the coordination of work has since been evaluated in the corrective actions for this finding, and status meetings have been incorporated into the daily routine -- the assessment team encountered similar problems as identified by the March, 2008 EM-62 report. EM-62 identified problems with work status which prevented work execution following the Daily Release Sheet Meeting. While one failed work item was in-line with EM-62's original observation, others problems the assessment team observed were associated with work execution and completion after a work crew entered the field, or due to improperly trained crew members. The work status was improved, but the execution remains lacking for a variety of reasons.

Rating:

Effective

Recommendation for Completion:

None

Suggestions for Continued Improvement:

S-EM-62 OP.1 SO-1-1
The TOC should reevaluate the process of planning, scheduling and releasing daily work items; the process should have checks in place to assure the packages are workable, resources are available, and the workers are trained.

Reviewer:

Lead, Ron Ciola, DOE-ORP, Facility Representative
Kerry Schierman, DOE-RL, Facility Representative
Joe Sondag, DOE-ORP, Facility Representative
Jack George, DOE-RL, Facility Representative Program Manager

washington river protection solutions
PO Box 850
Richland, WA 99352

June 10, 2009

WRPS-0901065 R1

Ms. S. L. Charboneau, Assistant Manager
Tank Farms Project
U.S. Department of Energy
Office of River Protection
Post Office Box 450
Richland, Washington 99352-0450

Dear Ms. Charboneau:

CONTRACT NO. DE-AC27-08RV14800 – WASHINGTON RIVER PROTECTION SOLUTIONS LLC RESPONSE TO THE U. S. DEPARTMENT OF ENERGY, OFFICE OF RIVER PROTECTION FINAL REPORT ON THE EFFECTIVENESS OF CORRECTIVE ACTIONS FOR THE TYPE A ACCIDENT INVESTIGATION OF THE HANFORD S-102 TANK WASTE SPILL

Reference: Letter, S. L. Charboneau, ORP, to J. M. Armstead, WRPS, "Contract No. DE-AC27-08RV14800 – U. S. Department of Energy, Office of River Protection (ORP) Final Report on the Effectiveness of Corrective Actions for the Type A Accident Investigation of the Hanford S-102 Tank Waste Spill," 09-TOD-030/0901065, dated May 15, 2009.

On May 13, 2009, the U. S. Department of Energy (DOE), Office of River Protection (ORP) transmitted the results of the final assessment report of the Effectiveness of Corrective Actions for the Type A Accident Investigation of the Hanford S-102 Tank Waste Spill (Reference).

The effectiveness assessment concluded that the corrective actions resulting from the Type A accident investigation were complete, and the assessment final report was approved by the ORP Manager on May 7, 2009. The assessment identified 26 opportunities for improvement. The ORP requested a formal response to address 14 of the 26 suggestions for continued improvement to include: 1) the plan (including specific actions planned) for implementing suggestions, 2) the dates when the specific actions will be completed and verified, and 3) the Problem Evaluation Request (PER) tracking number for each suggestion. As requested, the enclosed Corrective Action Plan addresses the identified 14 of the 26 suggestions for continued improvement.

The results of the review and corrective actions outlined in the enclosed CAP were discussed with Mr. R. J. Ciola of your staff.

Should you have any questions regarding the information provided, you may contact me at 372-9138, or your staff may contact Mr. R. E. Gregory on 373-5748.

Sincerely,

(Signature Attached)

William J. Johnson
President and Project Manager

BLM:POH

Enclosure: Corrective Action Plan - Assessment of the Effectiveness of Corrective Actions for the Type A Accident Investigation of the Hanford S-102 Tank Waste Spill (15 pages)

cc: ORP Correspondence Control
S. E Bechtol, ORP
R. J. Ciola, ORP
B. A. Harkins, ORP
S. C. Johnson, ORP
J. C. Poniatowski, ORP
H. N. Taylor, ORP

WRPS Correspondence Control
J. C. Allen-Floyd, WRPS
J. M. Armstead, WRPS
M. N. Brosee, WRPS
G. J. Johnson, WRPS
E. M. LaRock, WRPS
B. L. Mata, WRPS
N. J. Milliken, WRPS
S. M. Sax, WRPS
B. R. Thomas, WRPS

Electronically Approved by:

UserName: Johnson, William (h0094870)
Title: President and Project Manager
Date: Wednesday, 10 June 2009, 03:25 PM Pacific Daylight Time
Meaning: Sign as William J. Johnson

==========

CORRECTIVE ACTION PLAN

Assessment of the Effectiveness of Corrective Actions for the Type A Accident Investigation of the Hanford S-102 Tank Waste Spill

U. S. Department of Energy, Office of River Protection

Assessment Report

May 13, 2009

Prepared by:

Washington River Protection Solutions LLC
June 11, 2009

Table of Contents

1.0 Introduction 3
2.0 Corrective Action Methodology 4
3.0 Corrective Action Plan Structure 5
4.0 Review and Approval of WRPS Corrective Action Plan 5
5.0 Corrective Action Plan Reporting and Closure 5
6.0 Corrective Action Plan 5
6.1 S-HE-1-1 5
6.2 S-MS-1-3 6
6.3 S-WC-3-1 7
6.4 S-WC-3-3 8
6.5 S-WC-3-4 10
6.6 S-WC-4-1 10
6.7 S-WC-3-2, S-WC-4-2, and S-WC-4-3 11
6.8 S-WC-4-4 12
6.9 S-WC-4-7 13
6.10 S-EM-60 10.1-1 13
6.11 S-RCA-JON-8-1 14
6.12 S-EM-62 OP.1 F-2-1 15

1.0 Introduction

The U. S. Department of Energy (DOE) Office of Health, Safety and Security (HSS), conducted a Type A Accident Investigation (Type A) following the July 2007 Tank S-102 waste spill at the DOE Hanford Nuclear Reservation. The Accident Investigation Board identified sixteen Judgements of Need (JON) in the areas of engineering, work processes, emergency management, industrial hygiene, and management and oversight. A Corrective Action Plan (CAP) was developed, approved, and implemented.

Following implementation, in April 2009, DOE conducted an effectiveness review of the Type A corrective actions. The objective of the review was to evaluate the effectiveness of the corrective actions in addressing and correcting the underlying causes of the JONs and preventing recurrence. The effectiveness assessment concluded that the corrective actions resulting from the Type A accident investigation were effective and complete. The assessment identified 26 opportunities for improvement. The DOE/ORP requested a formal response to address 14 of the 26 suggestions for continued improvement to include; 1) the plan (including specific actions planned) for implementing suggestions, 2) the dates when the specific actions will be completed and verified, and 3) the Problem Evaluation Request (PER) tracking number for each suggestion. This CAP addresses the following Suggestions for Continued Improvement:

S-HE-1-1 WRPS should revise drill scenarios to include a chemical attribute that requires more in-depth Industrial Hygiene (IH) response which may include a worker(s) in contact with tank waste, chemical spill, vapor event, etc.

S-MS-1-3 WRPS should update the Fiscal Year (FY) 2009 Integrated Assessment Schedule such that assessments evaluating the continued efficacy of the lessons learned program are conducted.

S-WC-3-1 A consistent enhanced work planning/document concurrence approach should be implemented for technical changes to Abnormal Operating Procedures.

S-WC-3-2 The Tank Operations Contractor (TOC) should conduct periodic awareness/proficiency training on the "Immediate Recovery Work" process for those personnel involved in the process.

S-WC-3-3 Procedure non-compliance events identified since the issue of WRPS letter to DOE-ORP, "Washington River Protection Solutions LLC Response to Abnormal Events Surveillance S-09-ESQ-TANKFARM-003, "'Washington River Protection Solutions LLC Root and Common Cause Analysis Results,"' dated April 8, 2009, should be considered when implementing the corrective actions identified in the report.

S-WC-3-4 The TOC should improve the self-identification and reporting (i.e. per the PER process) of procedure non-compliances to facilitate causal determination, trending, and/or resolution.

S-WC-4-1	The TOC should determine if and when telephone approval is acceptable for the release of minor work, and proceduralize the requirements if it is deemed allowable.
S-WC-4-2	The TOC should determine the appropriate level of radiological controls for "Immediate Recovery Work" as discussed in TFC-OPS-MAINT-C-0l, *Tank Operations Contractor Work Control;* these controls must mesh with Section 4.10 of TFC-ESHQ-RP_RWP-C-04, *Radiological Work Permits* (i.e. consistent terminology-"immediate recovery" vs. 'emergency").
S-WC-4-3	The TOC should include a requirement to consider the need to develop industrial hygiene and safety controls in Section 4.3 of TFC-OPS-MAINT-C-0l, *Tank Operations Contractor Work Control,* when preparing for "Immediate Recovery Work."
S-WC-4-4	The TOC should include definitions for "troubleshooting" and "routine work" in the work control procedure, TFC-OPS-MAINT-C-0l, *Tank Operations Contractor Work Control.*
S-WC-4-7	WRPS should develop and conduct work control process training with shift managers and field work supervisors.
S-EM-60 10.1-1	Standing Order 07-008 should be revised to include a statement directing the length of time the Standing Order will remain in effect, and how the requirements of the order will be captured for future projects.
S-RCA-JON-8-1	Form A-6002-909, *Verification/ Validation (V& V) Checklist,* should be updated to require the Technical Authority to ensure critical tasks have been identified.
S-EM-62 OP.1 F-2-1	The TOC should incorporate continuing training on Technical Safety Requirements (TSRs) for Shift Managers; training should include the basis for each TSR, and information from the Documented Safety Analysis (DSA) including relevant accident scenarios and unmitigated consequences.

2.0 Corrective Action Methodology

A process based on Washington River Protection Solutions LLC (WRPS) procedure TFC-ESHQ-Q_C-C-01, Problem Evaluation Request, was used to develop this CAP. The Suggestions for Continued Improvement are documented in PERs in the WRPS Issues Management System. WRPS analysis of the Suggestions for Continued Improvement, Corrective Actions Taken, and Planned Corrective Actions will be documented and tracked in the associated PER.

3.0 Corrective Action Plan Structure

The CAP structure is as follows:

Suggestion for Continued Improvement Number: Number from Assessment.

Suggestion for Continued Improvement: Description from Assessment.

PER Tracking Number: WRPS PER identification number.

Responsible Manager: Assigned WRPS manager responsible for the analysis and corrective actions.

Evaluation: WRPS evaluation of the Suggestion for Continued Improvement.

Remedial Corrective Actions: The immediate actions taken.

Corrective Actions to be Taken: Planned Corrective Actions to implement the Suggestion for Continued Improvement.

4.0 Review and Approval of WRPS Corrective Action Plan

This CAP was developed by the assigned responsible manager and was approved by the Base Operations Manager.

5.0 Corrective Action Plan Reporting and Closure

Corrective Actions for the Suggestions for Continued Improvement will be tracked and monitored using the PER system.

To close an action, the responsible manager must provide objective evidence documenting completion of the actions. Closure documentation will be attached electronically to the associated PER.

6.0 Corrective Action Plan

6.1 S-HE-1-1

Suggestion for Continued Improvement: *WRPS should revise drill scenarios to include a chemical attribute that requires more in-depth Industrial Hygiene (IH) response which may include a worker(s) in contact with tank waste, chemical spill, vapor event, etc.*

PER Tracking Number: WRPS-PER-2009-0867

Responsible Manager: E. A. Tackett

Evaluation: WRPS has reviewed the Suggestion for Continued Improvement and agrees with the recommendation. Drill scenarios are developed based on results of the Emergency Planning Hazard Assessments that identify the hazards present in the facility. Scenarios are reviewed periodically for low consequence, high probability situations. Industrial Hygiene (IH) in-depth involvement will be reviewed on a routine basis and incorporated as required.

Remedial Corrective Actions: A chemical drill scenario was conducted on April 7, 2009 in support of the ORP/RL Emergency Preparedness (EP) Assessment and the S-102 Assessment in conjunction with the local DOE Office. The scenario involved a more in-depth IH response. WRPS will perform additional in-depth IH drill(s) within the calendar year.

Corrective Actions to be Taken:

Corrective Action	Deliverable	Action Owner	Due Date
Conduct in-depth IH specific drill within calendar year 2009.	Summary of drill scenario performed and verification of completion.	E. A. Tackett	1/1/2010

6.2 S-MS-1-3

Suggestion for Continued Improvement: *WRPS should update the Fiscal Year (FY) 2009 Integrated Assessment Schedule such that assessments evaluating the continued efficacy of the Lessons Learned program are conducted.*

PER Tracking Number: WRPS-PER-2009-0883

Responsible Manager: C. Maciuca

Evaluation: WRPS has reviewed the recommendation and agrees with the recommendation.

Remedial Corrective Actions: The WRPS Integrated Assessment Schedule was revised to include Specialty Assessment FY2009-ESHQ-S-0355, *WRPS Lessons Learned Program Effectiveness.*

Corrective Actions to be Taken:

Corrective Action	Deliverable	Action Owner	Due Date
Complete WRPS Specialty Assessment FY2009-ESHQ-S-0355, *WRPS Lessons Learned Program Effectiveness*	Completed Assessment	C. Maciuca	9/14/2009

6.3 S-WC-3-1

Suggestion for Continued Improvement: *A consistent enhanced work planning/document concurrence approach should be implemented for technical changes to Abnormal Operating Procedures.*

PER Tracking Number: WRPS-PER-2009-0870

Responsible Manager: T. Rahm

Evaluation: WRPS has evaluated the suggestion for improvement and agrees with the recommendations.

Remedial Corrective Actions: A revision to TFC-OPS-OPER-C-13, *Technical Procedure Control and Use*, has been drafted.

Corrective Actions to be Taken:

Corrective Action	Deliverable	Action Owner	Due Date
Revise TFC-OPS-OPER-C-13 to include the following: "Note: Changes to Abnormal Operating Procedures, other than inconsequential (as defined in TFC-ENG-SB-C-03) will be reviewed by the Procedure User, Shift Manager, Technical Authority, Security and Emergency Services/Events and Investigations, Safety, Radiological Control, and Environmental.	Revised Procedure	T. Rahm	7/5/2009

Corrective Action	Deliverable	Action Owner	Due Date
Revise TFC-OPS-OPER-C-13, Attachment A, "Review Matrix for Technical Procedures," to include Security and Emergency Services/Events and Investigations, Safety, Radiological Control, and Environmental as reviewers for changes (other than inconsequential) to AOPs.	Revised Procedure	T. Rahm	7/5/2009

6.4 S-WC-3-3

Suggestion for Continued Improvement: *Procedure non-compliance events identified since the issue of WRPS letter to DOE-ORP, Washington River Protection Solutions LLC Response to Abnormal Events Surveillance S-09-ESQ-TANKFARM-003, Washington River Protection Solutions LLC Root and Common Cause Analysis Results, dated April 8, 2009, should be considered when implementing the corrective actions identified in the report.*

PER Tracking Number: WRPS-PER-2009-0872

Responsible Manager: R. E. Gregory

Evaluation: WRPS evaluated the Suggestion for Continued Improvement and agrees with the recommendation. Subsequent to commencing the Root and Common Cause Analysis on WRPS Response to Abnormal Events, two procedural non-compliance events occurred (242-A Slurry Sampling and 242-A Lockout/Tagout Violation). Although these events were not incorporated into the Root and Common Cause Analysis, these events were considered during the development and implementation of Corrective Actions.

Remedial Corrective Actions: The following actions were completed to address procedure non-compliance events:

- A Conduct of Operations Council (COOC) was established on March 24, 2009. This council is the governing body for promoting continuous improvement in Conduct of Operations for the TOC. Goals of the COOC are to: 1) promote excellence and continuous improvement in Conduct of Operations (including Radiological Practices), 2) implement process changes that integrate Con Ops, human performance initiative (HPI), and Integrated Environment, Safety and Health Management System (ISMS), and 3) provide oversight and direction for company-wide Conduct of Operations and HPI related activities, guidelines,

priorities, monitoring, overall program effectiveness, communication, and lessons learned. (ref. WRPS-PER-2009-0385)

- On 4/24/09, the Base Operations Manager issued WRPS-0900641, Aggressive Management Observation Program Provides Results. The intent of the memo was to re-emphasize an aggressive Management Observation Program (MOP) to continually perform management oversight and encourage routine feedback. Focus areas identified to achieve disciplined operations include personal accountability, technical inquisitiveness, procedure compliance, and willingness to stop. (ref. WRPS-PER-2009-0385)

- A series of face-to-face briefings were performed within Base Operations and Single Shell Tank Retrieval and Closure Operations during April and May of 2009. Briefing topics included the timely identification of issues, questioning attitude, conservative decision making, procedure compliance, lessons learned, and formal communications. (ref. WRPS-PER-2009-0385)

- A Common Cause Analysis (CCA) was performed for similar events to the 242-A Slurry Sampling procedure non-compliance. The CCA was conducted utilizing event decomposition, historical review of events contained within the PER database, review of event investigation reports, historical performance metrics, and personnel interviews. The analysis identified the following primary common cause "Management Problem, Management Methods Less Than Adequate (LTA), Management Policy guidance/Expectations not well-defined, understood, or enforced." The analysis resulted in the generation of two new corrective actions to strengthen procedure compliance, command and control, and communications. (ref. WRPS-PER-2009-0471)

Corrective Actions to be Taken: No new corrective actions were generated as a result of this evaluation, however, the following planned corrective actions are in place to strengthen WRPS culture regarding strict procedure compliance:

- Update operator continuing training material to include Human Performance Initiative (HPI) training. ECD: 7/31/09 (ref. WRPS-PER-2009-0385)

- Develop a Conduct of Operations Improvement Plan to address weaknesses in Chapters 1, 2, and 4. The Conduct of Operation Improvement should include a means to reduce human error, increase management oversight and communications, and reinforcement of the questioning attitude. ECD: 7/31/09 (ref. WRPS-PER-2009-0471)

- Assemble a worker-level team to evaluate the active human errors (event "triggers") associated with the events described in CCA report for LTA Conduct of Operations at 242-A. Include an evaluation of "last-line-of-defense" tools/techniques used to prevent active human errors. Provide recommendations to the Conduct of Operations Council on tools, techniques, etc. that, if strengthened or implemented, will aid in the prevention of future similar events.

The team should include a cross-organizational representation of Bargaining Unit personnel, First Line Managers, and Operations Engineers. ECD: 7/20/09 (ref. WRPS-PER-2009-0471)

6.5 S-WC-3-4

Suggestion for Continued Improvement: *The TOC should improve the self-identification and reporting (i.e. per the PER process) of procedure non-compliances to facilitate causal determination, trending, and/or resolution.*

PER Tracking Number: WRPS-PER-2009-0873

Responsible Manager: C. Maciuca

Evaluation: WRPS has reviewed the recommendation and agrees with the areas of improvement identified.

Remedial Corrective Actions:

- The initiative to address the suggestion for continued improvement was completed by way of tailgate communications as part of ISMS verification activities. On May 18, 2009, a tailgate presentation was issued which included a knowledge test of the PER process with specific questions related to the document to be initiated (PER) for conditions that require resolution, trending, cause determination, or identification and tracking of corrective actions (including procedure non-compliances).

- Independent Assessment FY2009-WRPS-I-0005, *Base Operations Management Systems*, and FY2009-ESHQ-0355, *WRPS Lessons Learned Program Effectiveness,* have been added to the WRPS Integrated Assessment Schedule. These assessments will include an evaluation of the self-identification and reporting processes of procedure non-compliance related issues.

Corrective Actions to be Taken: No additional corrective actions necessary.

6.6 S-WC-4-1

Suggestion for Continued Improvement: *The TOC should determine if and when telephone approval is acceptable for the release of minor work, and proceduralize the requirements if it is deemed allowable.*

PER Tracking Number: WRPS-PER-2009-0857

Responsible Manager: J. Klos

Evaluation: WRPS evaluated the suggestion for continued improvement and agrees an evaluation is warranted. A team-approach evaluation of the process for telephone release of minor work activities will be performed. The resulting changes to the process will be proceduralized as warranted.

Remedial Corrective Actions: No remedial actions taken.

Corrective Actions to be Taken:

Corrective Action	Deliverable	Action Owner	Due Date
Utilizing a team-approach (soliciting input from end users), perform an in-depth evaluation to determine if telephone release of minor work is appropriate for certain situations.	Copy of evaluation	J. Klos	7/24/09
Implement changes, as necessary based on the evaluation, to TFC-OPS-MAINT-C-01, *Tank Operations Contractor Work Control.*	Revised procedure, as warranted.	J. Klos	7/24/09

6.7 S-WC-3-2, S-WC-4-2, and S-WC-4-3

It should be noted that an evaluation of the TFC-OPS-MAINT-C-01, *Tank Operations Contractor Work Control*, category "immediate recovery work" was performed to address the Suggestions for Continued Improvement items S-WC-3-2, S-WC-4-2, and S-WC-4-3. The improvement items are documented on individual PERs and vary by responsible manager, however, the collective evaluation and planned corrective action will adequately address the three improvement items.

Suggestion for Continued Improvement S-WC-3-2: *The Tank Operations Contractor (TOC) should conduct periodic awareness/proficiency training on the "Immediate Recovery Work" process for those personnel involved in the process.*

PER Tracking Number: WRPS-PER-2009-0871

Responsible Manager: T. Reynolds

Suggestion for Continued Improvement S-WC-4-2: *The TOC should determine the appropriate level of radiological controls for "Immediate Recovery Work" as discussed in TFC-OPS-MAINT-C-01, Tank Operations Contractor Work Control. These controls must mesh with Section 4.10 of TFC-ESHQ-RP-RPW-C-04, Radiological Work Permits, (i.e. consistent terminology – "immediate recovery" vs. "emergency."*

PER Tracking Number: WRPS-PER-2009-0875

Responsible Manager: J. Klos

Suggestion for Continued Improvement S-WC-4-3:

The TOC should include a requirement to consider the need to develop industrial hygiene and safety controls in Section 4.3 of TFC-OPS-MAINT-C-0l, Tank Operations Contractor Work Control, when preparing for "Immediate Recovery Work."

PER Tracking Number: WRPS-PER-2009-0875

Responsible Manager: J. Klos

Evaluation of S-WC-3-2, S-WC-4-2, and S-WC-4-3: WRPS reviewed the Suggestions for Continued Improvement and agrees with the recommendations. WRPS has the responsibility and authority to stabilize an event through Abnormal Operating Procedures (AOP) and Alarm Response Procedures (ARP) and other emergency response procedures. As such, during an event these procedures will be utilized to place the facility in a stable and safe condition. At which time, any recovery actions and/or corrective maintenance activities would be performed utilizing the work planning processes outlined in Section 4.0 of TFC-OPS-MAINT-C-01, *Tank Operations Contractor Work Control.* This process ensures the hazards associated with the work activity have been analyzed and mitigated. WRPS has reviewed this internally and with members of DOE/ORP staff. Therefore, the "immediate recovery" section of TFC-OPS-MAINT-C-01 is not deemed necessary. It is WRPS intent to remove this section from the work control procedure. Revisions to the processes/procedures are communicated in accordance with TFC-OPS-OPER-C-13, *Technical Procedure Control and Use* and/or TFC-BSM-AD-C-01, *Administrative Document Development and Maintenance.*

Remedial Corrective Actions: No remedial actions taken.

Corrective Actions to be Taken:

Corrective Action	Deliverable	Action Owner	Due Date
Revise TFC-OPS-MAINT-C-01 to remove reference to "immediate recovery work."	Revised procedure	J. Klos	7/24/09

6.8 S-WC-4-4

Suggestion for Continued Improvement: *The TOC should include definitions for "troubleshooting" and "routine work" in the work control procedure, TFC-OPS-MAINT-C-0l, Tank Operations Contractor Work Control.*

PER Tracking Number: WRPS-PER-2009-0877

Responsible Manager: J. Klos

Evaluation: WRPS has reviewed the Suggestion for Continuous Improvement and agrees. Definitions of "troubleshooting" and "routine work" should be included in TFC-OPS-MAINT-C-01, *Tank Operations Contractor Work Control.*

Remedial Corrective Actions: No remedial actions taken.

Corrective Actions to be Taken:

Corrective Action	Deliverable	Action Owner	Due Date
Revise TFC-OPS-MAINT-C-01 to define "troubleshooting" and "routine work."	Revised procedure	J. Klos	7/24/09

6.9 S-WC-4-7

Suggestion for Continued Improvement: *WRPS should develop and conduct work control process training with shift managers and field work supervisors.*

PER Tracking Number: WRPS-PER-2009-0880

Responsible Manager: L. Keith

Evaluation: WRPS has reviewed the Suggestion for Continued Improvement and agrees with the recommendation. Currently, there are several methods for delivering training on the work control process. Delivery methods for conducting training is determined as part of the training design and development process. On-the-job (OJT) is the highest level of training and is the delivery method previously chosen for Tank Farms work control training for Operations Engineers (which is the base qualification for a Shift Manager) and Field Work Supervisors. These elements are contained within qualification and requalification cards for these positions (ref. course numbers 350501, 350503, 354000, and 354002.)

Remedial Corrective Actions: No remedial actions taken.

Corrective Actions to be Taken: No additional corrective actions necessary.

6.10 S-EM-60 10.1-1

Suggestion for Continued Improvement: *Standing Order 07-008 should be revised to include a statement directing the length of time the Standing Order will remain in effect, and how the requirements of the order will be captured for future projects.*

PER Tracking Number: WRPS-PER-2009-0884

Responsible Manager: T. Reynolds

Evaluation: This Standing Order was canceled/closed on 7/23/08. Therefore, no other action is required associated with this Standing Order. Since that time, during C-110 Retrieval, a standing order was generated that defined the interface roles between the Single Shell Tank Retrieval and Closure organization and the Base Operations organization with regard to normal and abnormal conditions. This Standing Order was in effect during the retrieval of C-110 and has since been closed, now that the retrieval activities associated with C-110 are complete. The process of generating a Standing Order to document the interface between the organizations during retrieval activities will continue, as required with the closure of the Standing Order occurring once the retrieval activity is completed and agreed upon by DOE/ORP.

The Shift Managers review the existing Standing Orders on a quarterly basis per TFC-OPS-OPER-C-40, *Shift Instructions and Standing Orders*, for continued applicability.

Remedial Corrective Actions: Standing Order 07-008 was closed on 7/23/08.

Corrective Actions to be Taken: No additional corrective actions necessary.

6.11 S-RCA-JON-8-1

Suggestion for Continued Improvement: *Form A-6002-909, Verification/Validation (V&V) Checklist, should be updated to require the Technical Authority to ensure critical tasks have been identified.*

PER Tracking Number: WRPS-PER-2009-0885

Responsible Manager: T. Rahm

Evaluation: WRPS has evaluated the Suggestion for Improvement and agrees with the recommendation. The step which required the "technical authority" to ensure that critical tasks have been identified, was inadvertently removed from form A-6002-909 during a previous revision. The form was revised on 5/7/09 to address this recommendation.

Remedial Corrective Actions: Site Form A-6002-909 was revised on 5/7/09 to include Technical Authority, checkbox #18, "*Have critical tasks been identified?*"

Corrective Actions to be Taken: No additional corrective actions necessary.

6.12 S-EM-62 OP.1 F-2-1

Suggestion for Continued Improvement: *The TOC should incorporate continuing training on Technical Safety Requirements (TSRs) for Shift Managers; training should include the basis for each TSR, and information from the Documented Safety Analysis (DSA) including relevant accident scenarios and unmitigated consequences.*

PER Tracking Number: WRPS-PER-2009-0890

Responsible Manager: T. Reynolds

Evaluation: WRPS reviewed the suggestion for improvement and agrees with the recommendations. The Shift Managers have been trained in the past on the TSRs, however the training did not include the Basis. As part of the 2009, Change Notice 3 Amendment, the Shift Managers will be trained on the Basis. The first round of training will include two-thirds of the TSR controls. Training on the remaining one-third of the controls will be performed by the end of calendar year 2009. Scheduling and performance of the Safety Basis change training will be tracked in accordance with TFC-OPS-OPER-C-02, *Safety Basis Implementation Checklist Preparation, Review, and Approval.*

Remedial Corrective Actions: No remedial action taken.

Corrective Actions to be Taken: No new corrective actions were identified as a result of this review, however, the following planned corrective actions are in place to strengthen the TSR knowledge base within the TOC.

- Complete Documented Safety Analysis (DSA) and Technical Safety Requirements (TSR) Overview Training Briefings for designated operations and engineering personnel. ECD: 6/30/09 (ref. WRPS-PER-2008-0341)

- Conduct a performance-based evaluation of the effectiveness of TSR knowledge and compliance elements of the Shift Manager initial qualification, re-qualification, and continuing training programs. ECD: 9/30/09 (ref. WRPS-PER-2008-0341)

Save

Problem Evaluation Request (PER)

WRPS-PER-2009-0883
In Process/Work

PER No	Date of Discovery	Time of Discovery (24:00)	Project
WRPS-PER-2009-0883	04/24/2009	00:00	Performance Assurance

Location

All Tank Farms

How Was Problem Discovered

DOE

Description of Concern or Problem

DOE Final Report on the Effectiveness of Corrective Actions for the Type A Accident Investigation of the Hanford S-102 Tank Waste Spill dated April 2009 states:

S-MS.1-3
WRPS should update the FY2009 Integrated Assessment Schedule such that assessments evaluating the continued efficacy of the lessons learned program are conducted. During an interview with the DOE Assessor (Mr. Roger Claycomb) Tino Maciuca, WRPS Performance Assurance, provided objective evidence of implementation of the lessons learned program, including a sample of five assessment reports demonstrating how lessons learned are evaluated for effectiveness. Toni also explained that lessons learned program is integrated with our Performance Assurance program from the Lead Assessor Qualification Card to the performance of assessments (independent, management, specialty). At the end of the interview, Mr. Claycomb stated that this element is satisfactory; however, the draft report documents the above suggestion for improvement.

The independent review conducted by the contractor in MS-1.1 to determine the effectiveness of causal analyses and corrective actions taken in response to significant events since January 1, 2003 identified that weaknesses existed in the causal analyses, corrective actions were narrowly scoped, and that there was a heavy reliance on endpoint assessments to evaluate the effectiveness of corrective actions. The Occurrence Reporting database was queried for reports filed since contract transition to WRPS. Of the eight reports filed, four were significance category 4 occurrences, which did not require any type of causal analyses or corrective actions. None of the other four reports requiring causal analysis and corrective actions were submitted as final within 45 days of categorization. One report, categorized on 10/9/08, was still not submitted as final as of 4/21/09. In events where human performance errors were identified, none of the cause codes had couplets identified. In one case, human performance was the single cause code identified, yet there were many unanswered questions based on the inavailability of records listed in the event investigation report.

MS-1.2 tasked the contractor to develop and implement an assessment plan to periodically evaluate the continued efficacy of the lessons learned program and corrective actions taken in response to significant events. The 5-SigPER CAP Strategy, Effectiveness Evaluations of Significant Event Corrective Actions, TFC-PLN-10 Rev E, and both the FY2008 and FY2009 integrated assessment schedules were reviewed. While the schedule contained ORP assessment activities of the lessons learned program, no such evidence could be found for the contractor. One activity, FY2009-ESHQ-M-0123 - Performance Assurance SMP, was found that discussed lessons learned, but did not provide any evaluation of the effectiveness of the program. The FY2009 schedule did contain evidence to support that WRPS is conducting assessments of corrective action effectiveness in regard to significant events.

The ORP review specified in MS-1.3 of the contractor evaluation conducted for MS-1.1, DOE-ORP Review of RPP-RPT-35553, Causal Analysis and Corrective Action Evaluation Report was reviewed and found to adequately summarize the effectiveness of the contractor review. However, a review of events since contract transition indicates a weakness in getting final reports submitted into the ORPS database in a timely manner.

The ORP Manager direction identified in MS-1.4 and transmitted to the contractor in Contract No. DE-AC27-99RL14047 - C-109 Readiness Assessment Expectations was reviewed and found to clearly establish Type A corrective action completion as a prerequisite to the restart of single shell tank retrieval operations at either S-102 or C-Farm.

Conclusions:

Implementation of TFC-PLN-10 did not result in specific assessments of the effectiveness of the lessons learned program as stated in CHG MS-1.2, although WRPS does include lessons learned effectiveness in several other management assessments. The contractor may benefit from including a programmatic assessment that evaluates the overall effectiveness of their lessons learned program that draws from those other various assessments and arrives at a collective program effectiveness determination.

The review of events since contract transition indicates a weakness in getting final reports submitted into the ORPS database in a timely manner. Additionally, information required in update reports including facility manager evaluation could be improved. Coordination between the contractor and DOE-ORP for closure of final occurrence reports needs to be strengthened.

Requirement Not Satisfied	Source Document Number

Equipment Identification Number	**System Identification**
N/A	

Immediate actions Taken or Planned

Generated this PER for evaluation of the suggestions for continued improvement.

Recommended Corrective actions

WRPS should update the FY2009 Integrated Assessment Schedule such that assessments evaluating the continued efficacy of the lessons learned program are conducted.

Originator Contact

No

Originators Name	Originators ID	Originators Phone	Date Initiated
Rensink, Gail L	H0021008	(509) 372-0092	05/04/2009

SHIFT OPERATIONS REVIEW

Title

DOE Final Report on the Effectiveness of Corrective Actions for the Type A Accident - FY2009 Integrated Assessment Schedule

How Discovered	Agency
FACREP Surveillance	

Reportability	SSC Operability	Operability Review	Comp Measures Req
Non-Reportable	N/A	N/A	

Describe actions Taken or Recommended

No additional actions taken or recommended by BO SM.

SO Reviewer Name	SO Reviewer ID	SO Reviewer Phone	SO Review Date
Malhan, Rakesh	H0046812	(509) 373-2689	05/04/2009

SCREENING

PER Significance Level	
PIE/CIM	

Independent Assessment Review	Occurrence Report Number	Externally Identified	
No		Yes	

Assigned Responsible Manager	Facilities Rep / SSO	Safety Management Rep	
Maciuca, Tino		Mata, Beth L	

Program	Safety Management Program
• N/A	• Performance Assessment

PER Screening Comments

See recommended corrective actions
(Nancy Brown 05/05/09)

Causal Code

MGT/Comm/Train	Human Performance	GEMS	Equip/Eng/Other

Failed Barrier	ORPS Code	Functional Area	Work Process
	Not Applicable	Assessments	• Assessments • Corrective Action Management

ISMS	Consequence Code	
Provide feedback and continuous improvement	• ^N/A^ - No consequence code	

	applies		
PER Screening Chair	**PER Screening Chair ID**	**PER Screening Chair Phone**	**PER Screening Date**
Brown, Nancy L	H0088797	(509) 373-0992	05/05/2009

PAAA REVIEW

PAAA Screening	**PAAA Codes**	**Function Codes**	
PAAA, Non-NTS Reportable	• 10 CFR 830.122 (i) • 10 CFR 830.122 (j) (1)	• Corrective Action Program	
NTS Report Number	**NTS Report Date**		
Repetitive / Recurrent	**Programmatic**	**Intentional Violation / Misrepresentation**	
No	No	No	

PAAA Screening Comments

PAAA Reviewer Name	**PAAA Review Date**	
Anderson, Craig E	05/05/2009	
PAAA Approver Name	**PAAA Approve Date**	
Anderson, Craig E	05/06/2009	

SENIOR MANAGEMENT REVIEW/CONCURRENCE

TF Operations Morning Leadership Call

N/A

Instructions for Responsible Manager

Evaluate suggestion, enter comments and required actions on PIE/CIM tab of the PER. Disposition in accordance with TFC-ESHQ-Q_C-C-01, Problem Evaluation Request.

Senior Management	**Sr Mgmt ID**	**Sr Mgmt Phone**	**Sr Mgmt Review Date**
Brown, Nancy L	H0088797	(509) 373-0992	05/06/2009

CAUSE ANALYSIS

Description of Occurrence

Extent of Condition

Safety Significance

Generic Implications

Remedial Corrective Action

Causal Analysis, Apparent Cause and/or Root Cause Analysis

CORRECTIVE ACTIONS

Actionee	**Action Due Date**	**E-STARS Number**
Maciuca, Tino	09/14/2009	WRPS-PER-2009-0883.1

Action

Complete WRPS Specialty Assessment FY2009-ESHQ-S-0355, WRPS Lessons Learned Program Effectiveness.

Deliverable: Completed Assessment

Corrective Action Attachments

- CORR-2009-0104 ORP S-102 Effectiveness Final Report.pdf
- Link to PER

- WRPS 0901065 R1 Letter.doc.pdf
- WRPS Lessons Learned Program Effectiveness assessment scheduled.pdf
- WRPS-0901065 R1 Enclosure.pdf

PIE/CIM

Evaluation of PIE/CIM Initiative

Evaluation: WRPS has reviewed the recommendation and agrees with the recommendation.

Remedial Corrective Actions: The WRPS Integrated Assessment Schedule was revised to include Specialty Assessment FY2009-ESHQ-S-0355, WRPS Lessons Learned Program Effectiveness.

ATTACHMENTS

CORR-2009-0104 ORP S-102 Effectiveness Final Report.pdf

Link to PER

WRPS 0901065 R1 Letter.doc.pdf

WRPS Lessons Learned Program Effectiveness assessment scheduled.pdf

WRPS-0901065 R1 Enclosure.pdf

AUDIT HISTORY

Change Date	Auditor	Comments
05/06/2009 10:47	Brown, Nancy L	Responsible Manager Task Launched by Brown, Nancy L
06/02/2009 14:29	Glaman, Linda R	'SMP Owner' review was added to ensure evaulation against formal response. LBG
06/18/2009 07:28	Mata, Beth L	Change to Cause Analysis screen/Corrective Action plan.
06/18/2009 07:29	Mata, Beth L	Change to Cause Analysis screen/Corrective Action plan.
07/09/2009 10:19	Glaman, Linda R	Corrective actions Launched by Glaman, Linda R

-- End of Report --
07/09/2009 03:54 PM

Task# WRPS-PER-2009-0883

E-STARS[R] Report
Task Detail Report
07/09/2009 1638

TASK INFORMATION			
Task#	WRPS-PER-2009-0883		
Subject	PIE; DOE Final Report on the Effectiveness of Corrective Actions for the Type A Accident - FY2009 Integrated Assessment Schedule		
Parent Task#		**Status**	Open
Reference		**Due**	10/02/2009
Originator	^PER Coordinator	**Priority**	Medium
Originator Phone		**Category**	PER
Origination Date	05/04/2009 1435	**Generic1**	None
Remote Task#		**Generic2**	None
Deliverable	PER Review	**Generic3**	None
Class	None	**View Permissions**	Global
Instructions	*No Instructions*		

ROUTING LISTS

1	Corrective actions Routing Lis	Active
	To launch Corrective actions.	
	• ^PER CAs - Assign - Awaiting Response - Due Date - 09/24/2009 0000 *Instructions:*	
	• Mata, Beth L - Review - Awaiting Response - Due Date - 09/28/2009 0000 *Instructions:*	
2	Responsible Manager	Inactive
	Review completion against formal response to ORP.	
	• Maciuca, Tino - Assign - Completed - 06/05/2009 0927 *Instructions:*	
	• Mata, Beth L - Review - Concur with comments - 06/18/2009 0731 *Instructions:*	
3	Review Initial PER	Inactive
	Review New PER	
	• ^SO(Malhan, Rakesh) - Review - Concur - 05/04/2009 1658 *Instructions:*	
	• ^PER Screening(Brown, Nancy L) - Review - Concur - 05/05/2009 1416 *Instructions:*	
	• ^Mgr Review - Review - Cancelled - 05/06/2009 1047 *Instructions:*	

ATTACHMENTS

Attachments	1. CORR-2009-0104 ORP S-102 Effectiveness Final Report.pdf 2. Link to PER 3. WRPS 0901065 R1 Letter.doc.pdf 4. WRPS Lessons Learned Program Effectiveness assessment scheduled.pdf 5. WRPS-0901065 R1 Enclosure.pdf

COMMENTS

Task# WRPS-PER-2009-0883

Poster	^PER Coordinator (Glaman, Linda R) - 06/02/2009 1430		
	Review role added. LBG 6-2-09		
	review role was added to ensure evaulation against formal response. LBG		
Poster	Mata, Beth L - 06/18/2009 0731		
	Concur		
	Concur with closure. The PER was revised to include planned corrective action as outlined in the Corrective Action Plan and committed to ORP in WRPS-0901065 R1. ORP feedback was provided via the attached letter and enclosure.		
TASK DUE DATE HISTORY			
Modified	07/09/2009 1019 - ^PER Coordinator	**New Due Date**	10/02/2009 0000
Modified	07/09/2009 1019 - ^PER Coordinator	**New Due Date**	09/28/2009 0000
Modified	05/06/2009 1047 - ^PER Coordinator	**New Due Date**	07/03/2009 1630
Modified	05/06/2009 1047 - ^PER Coordinator	**New Due Date**	07/03/2009 1630
Modified	05/04/2009 1435 - ^PER Coordinator	**New Due Date**	05/06/2009 1630
SUB TASK HISTORY			
Subtask#	WRPS-PER-2009-0883.1		
Subject	WRPS-PER-2009-0883; PIE; Complete WRPS Specialty Assessment FY2009-ESHQ-S-0355, WRPS Lessons Learned Program Effectiveness. Deliverable: Completed		
Originator	^PER CAs		
	Routing List	Corrective Action	
	Assignee	Maciuca, Tino	**Response**

-- end of report --

INCOMING CORRESPONDENCE COVERSHEET

CORR-2009-0104

Author	Addressee	Correspondence No.
S. Charboneau/ORP	J. M. Armstead/WRPS	0901065 DOE-ORP: 09-TOD-030

Subject: CONTRACT NO. DE-AC27-08RV14800 – U.S. DEPARTMENT OF ENERGY, OFFICE OF RIVER PROTECTION (ORP) FINAL REPORT ON THE EFFECTIVENESS OF CORRECTIVE ACTIONS FOR THE TYPE A ACCIDENT INVESTIGATION OF THE HANFORD S-102 TANK WASTE SPILL

DISTRIBUTION

Washington River Protection Solutions
WRPS Correspondence Control
JC Allen-Floyd
JM Armstead
F Beranek
HS Berman
PB Brannan
MN Brosee ((Assingee))
RE Gregory
GN Hanson
DB Hardy
GJ Johnson
WJ Johnson
EM Larock
MA Lindholm
WE Ross
KJ Rueter
SM Sax
DL Shugars
DK Smith
BR Thomas

Priority:	**NORMAL**
Assignee:	M. N. Brosee
Received:	May 14, 2009
Due Date:	6/14/2009 – Respond in writing to the listed Suggestions for Continued Improvement as directed by ORP.

WRPS Correspondence Control
For Questions call: 376-0271
Outlook Address: ^WRPS Correspondence Control

U.S. Department of Energy
Office of River Protection
P.O. Box 450, MSIN H6-60
Richland, Washington 99352

MAY 13 2009

09-TOD-030

0901065

Mr. Mike Armstead, Contract Manager
Washington River Protection Solutions LLC
2440 Stevens Center Place
Richland, Washington 99354

Dear Mr. Armstead:

CONTRACT NO. DE-AC27-08RV14800 – U.S. DEPARTMENT OF ENERGY, OFFICE OF RIVER PROTECTION (ORP) FINAL REPORT ON THE EFFECTIVENESS OF CORRECTIVE ACTIONS FOR THE TYPE A ACCIDENT INVESTIGATION OF THE HANFORD S-102 TANK WASTE SPILL

Attached is the final report from the April assessment of the Effectiveness of Corrective Actions for the Type A Accident Investigation of the Hanford S-102 Tank Waste Spill. The effectiveness assessment concluded that the corrective actions resulting from the Type A accident investigation were complete. The effectiveness assessment final report was approved by the ORP Manager on May 7, 2009.

Please respond in writing to the following Suggestions for Continued Improvement within 30 days of receipt of this letter:

- S-HE-1-1
- S-MS.1-3
- S-WC-3-1
- S-WC-3-2
- S-WC-3-3
- S-WC-3-4
- S-WC-4-1
- S-WC-4-2
- S-WC-4-3
- S-WC-4-4
- S-WC-4-7
- S-EM-60 10.1-1
- S-RCA-JON-8-1
- S-EM-62 OP.1 F-2-1

The response should include:

- The plan (including specific actions planned) for implementing the suggestions;
- the dates when the specific actions will be completed and verified; and
- the Project Issues Evaluation Reporting System tracking number for each suggestion.

This letter is not considered to constitute a change to the contract. In the event the Contractor disagrees with this interpretation, it must immediately notify the Contracting Officer orally, and otherwise comply with the requirements of the Contract clause entitled 52.243-7, "Notification of Changes."

If you have any questions, please contact me, or your staff may contact Brian A. Harkins, Director, Tank Farm Operations Division, (509) 438-0483.

Sincerely,

Stacy Charboneau

Stacy Charboneau, Assistant Manager
for Tank Farms Project

TOD:BAH

Attachment

cc w/attach:
R. G. Quirk, DNFSB
W. M. Linzau, DNFSB
H. S. Berman, WRPS
P. B. Brannan, WRPS
M. N. Brosee, WRPS
R. E. Gregory, WRPS
G. N. Hanson, WRPS
D. B. Hardy, WRPS
E. M. Larock, WRPS
M. A. Lindholm, WRPS
W. E. Ross, WRPS
S. M. Sax, WRPS
D. L. Shugars, WRPS
D. K. Smith, WRPS
WRPS Correspondence

RECEIVED
MAY 14 2009
WRPS
CORRESPONDENCE CONTROL

Attachment
09-TOD-030

Final Report on the Effectiveness of Corrective Actions for the Type A Accident Investigation of the Hanford S-102 Tank Waste Spill – April 2009

Consisting of 125 pages, including coversheet

U. S. Department of Energy

Final Report on the Effectiveness of Corrective Actions for the Type A Accident Investigation of the Hanford S-102 Tank Waste Spill

April 2009

Submitted: 5/7/09

Assessment Team Leader Date

Approved: 5/7/09

Manager, Office of River Protection Date

TABLE OF CONTENTS

Signature Page 2
Table of Contents 3
Acronyms 5
Executive Summary 7
Background/Scope 7
Results 8
Conclusions 10
Rating 11
Recommendations 12
Suggestions for Continued Improvement 12
Appendix A—Corrective Action Evaluation Forms 15
Type A Accident Investigation JONs
ENG-1 16
ENG-2 18
ENG-3 22
ENG-4 24
EM-1 27
EM-2 30
EM-3 34
HE-1 37
HE-2 41
HE-3 45
WC-1 50
WC-2 53
WC-3 56
WC-4 62
MS-1 71
MS-2 75
EM-60 Trip Report
4.0 79
6.0 81
10.1 83
11.0 86
S-102 Corrective Action Plan CH2M HILL Root Cause Analysis
JON-5 88
JON-8 92
JON-9 95
JON-13 99

Table of Contents (continued)

Emergency Response and Health Effects PERs 102
DOE ORP Self-Assessment 106
EM-62 Assessment
OP.1 F.1 110
CA.1 F-2 113
OP.1 F-2 115
OP.1 F-4 119
OP.1 SO-1 121

ACRONYMS

ALARA	As Low As Reasonably Achievable
AMH	AdvancedMed Hanford
AOP	Abnormal Operating Procedures
ATS	Analytical Technical Services
CA	Corrective Action
CAP	Corrective Action Plan
CH2M HILL	CH2M HILL Hanford Group, Inc.
CHG	CH2M HILL Hanford Group, Inc
CONOPS	Conduct of Operations
DOE	United States Department of Energy
DOE-ID	DOE Idaho Operations Office
DSA	Documented Safety Analysis
EALs	Emergency Action Levels
ECN	Engineering Change Notices
ECT	Event Coordination Team
EDT	Engineering Document Transmittals
EOC	Emergency Operations Center
EOC	Extent of Conditions
EM	Emergency Management
EMS	Emergency Medical Services
ENG	Engineering Design
EPHA	emergency planning hazards assessment
ERAP	Hanford Emergency Readiness Assurance Plan
ESQ	Environmental Safety and Quality
ESRB	Executive Safety Review Board
FH	Fluor Hanford
FLM	First Line Manager
FRI	Facility Representative Instruction
FR	Facility Representative
HAMTC	Hanford Atomic Metal Trades Council
HEPA	High Efficiency Particulate Air
HPI	Human Performance Improvement
HPT	Health Physics Technician
HQ	Headquarters
HRA	High Radiation Area
HVAC	Heat Ventilation Air Conditioning
ICP	Incident Command Post
IDMS	Integrated Document Management System
IH	Industrial Hygiene/Hygienist
IHT	Industrial Hygiene/Hygienist Technician
ISM	Integrated Safety Management
JON	Judgment of Needs
LTA	Less Than Adequate

MBAA	Material Balance Discrepancy Data
MOC	Manager On Call
MOP	Management Observation Program
MPOC	Medical Provider On Call
MS	Management System
NCO	Nuclear Chemical Operator
OA	Operational Awareness
OE	Operation Engineer
OJT	On the Job Training
ORP	Department of Energy's Office of River Protection
OSHA	Occupational Safety and Health Administration
OMSP	On-site Medical Service Provider
PER	Problem Evaluation Request
PHA	Process Hazard Analysis
PrHA	Process Hazard Analysis
PIC	Person in Charge
PISA	Potentially Inadequate Safety Analysis
QA	Quality Assurance
RA	Readiness Assessment
RCA	Root Cause Analysis
RCT	Radiological Controls Technician
RLEP	Emergency Plan Implementing Procedure
RPP	River Protection Project
RSR	Radiological Survey Report
SM	Shift Manager
SME	Subject Matter Experts
SMP	Safety Management Program
SOE	Stationary Operating Engineer (Power Operator)
SOG	Standard Operating Guidelines
SSC	Systems Structures and Components
SST	Single Shell Tank
SSW	Senior Supervisory Watch
TED	Tank Farm Engineering Division
TFC	Tank Farm Contractor
TOC	Tank Farms Operations Contractor
TOD	Tank Farms Operations Division
TSR	Technical Safety Requirements
TVIS	Tank Vapor Information Sheet
USQ	Unreviewed Safety Question
WC	Work Control
WHA	Work Site Hazards Analysis
WRPS	Washington River Protection Solutions, LLC
WTCRB	Waste Transfer Confinement Review Board

EXECUTIVE SUMMARY

BACKGROUND/SCOPE

The U.S. Department of Energy Office of Health, Safety and Security (HSS), conducted a Type A Accident Investigation ("Type A") following the July 2007 Tank S-102 waste spill at the DOE Hanford Nuclear Reservation. The Accident Investigation Board identified sixteen (16) Judgments of Need (JON) in the areas of engineering, work processes, emergency management, industrial hygiene, and management and oversight. A comprehensive corrective action plan (CAP) was developed, approved, and implemented.

In accordance with the requirements of DOE O 470.2B, *Independent Oversight and Performance Assurance Program*, DOE O 414.1C, *Quality Assurance*, and the approved CAP, an effectiveness review of the Type A corrective actions was conducted during the period April 14-24, 2009. The objective of the review was to evaluate the effectiveness of the corrective actions in addressing and correcting the underlying causes of the identified JONs and preventing their recurrence.

The assessment team, comprised of 10 federal staff from the DOE Richland Operations Office, the Office of River Protection, and the Idaho Operations Office, along with two Hanford contractors, used the standard criteria, review, and approach document detailed in the approved assessment plan to evaluate effectiveness of corrective actions. The results of the effectiveness reviews for each JON/Finding reviewed are detailed in Attachment A.

There were a total of 207 corrective actions within the scope of this review. The review team completed a 100 percent effectiveness review of all 16 Type A corrective actions (95 corrective actions). A number of other assessments were conducted as a result of the S-102 event. The following assessment corrective actions were also included in the scope of this review (the first four reviews listed were included in the November 21, 2007 comprehensive Type A CAP):

- EM-60 Trip Report Response
- S-102 Corrective Action Plan CH2M HILL Root Cause Analysis (RCA)
- Listing of Issues Identified by the Event Response and Health Effects Reports
- DOE-ORP Corrective Action Plan for ORP Self-Assessments
- EM-62 Hanford Site River Protection Assessment Report (March 2008)

RESULTS

Corrective actions were completed according to the approved CAP: During this review, 100 percent of the 95 corrective actions from the Type A CAP were reviewed by the assessment team. In all, 167 of the 181 corrective actions from the Comprehensive Type A CAP were reviewed and all 167 of those reviewed were completed as committed to in the CAP. Additionally, 26 actions were reviewed as part of this assessment at the request of the ORP Manager, associated with the March 2008 EM-62 assessment report. Some corrective actions were not reviewed due to time constraints and as permitted by DOE O 414.1C, *Quality Assurance* (i.e. paragraph 2.d.(2)(c).1 of Attachment 4 to the Order states: "A 100 percent review of all corrective actions is not required to determine effectiveness"). Corrective actions not reviewed included two actions for the EM-60 Trip Report (EM-60 13.0—retrieval pump design suggestions and training), and 12 actions associated with the CH2M HILL RCA (JON-9—ALARA design reviews, and JON-12--process control plans) were not reviewed. The team did note that the TFC completed a formal end-point assessment that evaluated the effectiveness of these actions. During the review, the assessment team identified that some documentation for adequate closure was not readily available in the objective evidence files and had to be requested during the review.

Corrective actions were effective in preventing recurrence of the JON/Finding: For each JON, Finding and Issue related to the S-102 comprehensive CAP, the corrective actions were effective in preventing recurrence of the identified issues, except for one Type A JON, WC-3, which was evaluated as partially effective (recommendation for completion provided). Overall, however, the Type A Comprehensive CAP was effective in preventing recurrence of the identified issues.

Corrective actions implemented as a result of the S-102 Tank Waste Spill were institutionalized and remain in place after contract transition from the TFC to the TOC: In all cases, the review team determined that the corrective actions implemented as a result of the S-102 comprehensive CAP were institutionalized into procedures that remain in place at the time of this review. Therefore, the change in contractors at the Hanford site has had no adverse effect on the implementation of the S-102 corrective actions.

Listed below, is a summary of the effectiveness of the corrective actions for each JON/Finding. In some cases, although the corrective actions may have been effective, assessors identified opportunities for continued improvement; these are provided as "Suggestions for Continued Improvement"; these "suggestions" should be evaluated and action taken where deemed appropriate. Where the corrective actions were determined to be partially effective, a "Recommendation" is provided for additional action and is fairly self-explanatory; this "Recommendation" should be tracked through the contractor's corrective action management system.

Summary of Results Listed by Jon/Finding

Type A

ENG-1	Effective
ENG-2	Effective with 1 Suggestion for Continued Improvement
ENG-3	Effective
ENG-4	Effective with 1 Suggestion for Continued Improvement
EM-1	Effective
EM-2	Effective
EM-3	Effective
HE-1	Effective with 1 Suggestion for Continued Improvement
HE-2	Effective
HE-3	Effective
WC-1	Effective
WC-2	Effective
WC-3	Partially Effective with 1 Recommendation/4 Suggested Improvements
WC-4	Effective with 7 Suggestions for Continued Improvement
MS-1	Effective with 3 Suggestions for Continued Improvement
MS-2	Effective with 2 Suggestions for Continued Improvement

EM-60 Trip Report Response

Effective with 1 Suggestion for Continued Improvement (note: EM-60 9.0 was reviewed as part of Type A JON WC-4; two actions for EM-60 13.0 were not reviewed)

S-102 Corrective Action Plan CH2M HILL Root Cause Analysis

RCA-1	Covered in Type A ENG-2 Write-up
RCA-2	Covered in Type A ENG-2 Write-up
RCA-3	Covered in Type A ENG-2 Write-up
RCA-4	Covered in Type A ENG-2 Write-up
RCA-5	Effective
RCA-8	Effective with 3 Suggestions for Continued Improvement
RCA-9	Effective with 1 Suggestion for Continued Improvement
RCA-13	Effective with 1 Suggestion for Continued Improvement

Note: Actions for the following RCA JONs were detailed in the Type A CAP—RCA-6, -7, -10, and -11. Twelve (12) actions associated with the CH2M HILL RCA (JON-9—ALARA design reviews, and JON-12--process control plans) were not reviewed due to time constraints and as permitted by DOE O 414.1C, *Quality Assurance* (i.e. paragraph 2.d.(2)(c).1 of Attachment 4 to the Order states: "A 100 percent review of all corrective actions is not required to determine effectiveness."). The team did note that the TFC completed a formal end-point assessment that evaluated the effectiveness of these actions.

Listing of Issues Identified by the Event Response and Health Effects Reports

All	Effective

DOE-ORP Corrective Action Plan for ORP Self-Assessments

All	Effective

EM-62 Hanford Site River Protection Assessment Report (March 2008)

CA.1 F-2	Effective
OP.1 F-1	Effective
OP.1 F-2	Effective with 1 Suggestion for Continued Improvement
OP.1 F-4	Effective
OP.1 SO-1	Effective with 1 Suggestion for Continued Improvement

CONCLUSIONS

Based upon the review of objective evidence files, document reviews, interviews, and work observations, the team determined the corrective actions taken to address the Type A findings have been **effective** in correcting the causes identified in the CAP and in preventing recurrence of the identified deficiencies. The corrective actions for one Type A JON, WC-3, were determined to be partially effective in preventing recurrence of the JON. One recommendation for completion is provided for JON WC-3.

This assessment focused on the Type A Comprehensive CAP and the effectiveness of those actions in preventing recurrence. As such, the review conformed to the requirements of Attachment 4 of DOE O 414.1C, *Quality Assurance*, "Corrective Action Management Program." However, because this review was extensive, consisting of a large review team and including many different programmatic areas, the review team did not summarily discount deficiencies that were outside the scope of the review. During the course of the review (and as requested by the organizations being assessed), the review team did identify some deficiencies, some of which were beyond the scope of the review. When reviewing these deficiencies in their entirety, the team concluded that there were three specific areas where the TOC should apply focused management attention (It should be noted that the first area, Conduct of Operations/Culture was directly associated with Type A JON WC-3, which has been determined to be partially effective in corrective action effectiveness):

Conduct of Operations/Culture: Based on a review of DOE Facility Representative reports, Occurrence Reports, and Problem Evaluation Requests (PER), the TOC continues to experience breakdowns in conduct of operations, including instances of procedure compliance problems. The entire TOC workforce, including first line management and above, need to operate within the fundamental principle of following and adhering to procedures as written. In order to establish this mindset and culture, the entire workforce needs to be engaged and operating within this fundamental principle to ensure success and

establish defense in depth reinforcement from the bottom up and from the top down. During the review, however, the team observed adequate conduct of operations performance and no instances of procedure non-compliance. There were many work activities observed where the jobs were stopped for procedure or material problems; this was observed by the team to be a noteworthy practice.

Contractor Assurance System: Throughout the review, the review team identified many instances where contractor self-assessment and internal oversight processes should have found and corrected many of the problems identified during this review. Although the review team did not identify programmatic failures of the contractor assurance system, the nature and number of the deficiencies identified in this report clearly indicated weaknesses in contractor self-assessment and internal oversight processes. It is critical to the success of the TOC (and also DOE) to have a robust contractor assurance system to self-identify and correct problems, and to identify opportunities for continued improvement.

Work Planning, Control, and Execution: The review team identified a number of opportunities for improvement in the work control procedure. Additionally, the team noted several instances where work did not occur due to various reasons, including training problems, material problems, procedure problems, and poor planning. Although one manager reported that the weekly work completion rate was in excess of 90 percent, the review team observed work execution/completion rates closer to 33 percent. The review team did not determine the cause for the disparity in the work completion rates. However, it was apparent that the "greater than 90 percent completion rate" may not be representative of actual work completion rates in light of work performance observed by the team. TOC management needs to evaluate how this performance metric is calculated, ensure it reflects reality, and focus attention on the area of work planning, control, and execution in order to improve performance.

RATING

Overall, the team rated the contractor as **effective** in correcting the weaknesses identified in the Type A Comprehensive CAP, with one Recommendation for additional action and several suggestions for continued improvement. Although the team identified some areas that need improvement and focus (conduct of operations, contractor assurance, work control), the results in those areas did not have an adverse impact on the overall effectiveness rating of the Type A Comprehensive CAP effectiveness. As identified in this report, the team did determine one Type A JON, WC-3, corrective actions to be partially effective; however, the overall determination by the team was that the Type A Comprehensive CAP completed actions were effective at preventing recurrence of an event similar to the July 27, 2007 S-102 Tank Waste Spill.

RECOMMENDATIONS

There was one Recommendation identified for WRPS to improve performance in conduct of operations. The team recommends that the following "Recommendation for Completion" be entered into the WRPS issues management systems and be tracked to closure:

R-WC-3-1
WRPS should complete the corrective actions to improve Conduct of Operations and response to abnormal events identified by WRPS letter to DOE-ORP, "Washington River Protection Solutions LLC Response to Abnormal Events Surveillance S-09-ESQ-TANKFARM-003, 'Washington River Protection Solutions LLC Root and Common Cause Analysis Results,'" dated April 8, 2009, by the dates specified in the enclosure, and conduct an effectiveness review by the end of fiscal year 2009 (see Corrective Action Evaluation form starting on page 56 of this report for details).

SUGGESTIONS FOR CONTINUED IMPROVEMENT

In addition to the Recommendation, the team identified 26 opportunities for continuous improvement that are identified as "Suggestions for Continued Improvement"; these are also provided in the individual Corrective Action Evaluation Forms for each JON/Finding in this report. The ORP Manager will require a formal response from WRPS to address several of the suggestions provided below; this will be addressed in the ORP letter transmitting the report to the TOC.

S-JON ENG-2-1
The WTCRB charter should require a readily accessible, retrievable record of board meeting minutes.

S-JON ENG-4-1
ORP should provide the TOC a specified date for the implementation of Safety Basis Amendment-045.

S-HE-1-1
WRPS should revise drill scenarios to include a chemical attribute that requires more in-depth IH response which may include a worker(s) in contact with tank waste, chemical spill, vapor event, etc.

S-MS.1-1
WRPS should evaluate the occurrence reporting/causal analysis processes in order to improve compliance with the requirements of DOE M 231.1-2, and to improve the timely identification and completion of corrective actions for reportable occurrences.

S-MS.1-2
DOE-ORP and WRPS should collaboratively work to improve the timeliness of final occurrence report submittals.

S-MS.1-3
WRPS should update the FY2009 Integrated Assessment Schedule such that assessments evaluating the continued efficacy of the lessons learned program are conducted.

S-MS.2-1
ORP should increase tank farm field presence of SMEs to strengthen field oversight, and to improve support to the tank farm FRs.

S-MS.2-1
ORP should consider including all QA oversight activities (surveillances) on the integrated assessment schedule (those conducted beyond the established schedule are not normally added to the schedule once completed).

S-WC-3-1
A consistent enhanced work planning/document concurrence approach should be implemented for technical changes to Abnormal Operating Procedures.

S-WC-3-2
The TOC should conduct periodic awareness/proficiency training on the "Immediate Recovery Work" process for those personnel involved in the process.

S-WC-3-3
Procedure non-compliance events identified since the issue of WRPS letter to DOE-ORP, "Washington River Protection Solutions LLC Response to Abnormal Events Surveillance S-09-ESQ-TANKFARM-003, 'Washington River Protection Solutions LLC Root and Common Cause Analysis Results,'" dated April 8, 2009, should be considered when implementing the corrective actions identified in the report.

S-WC-3-4
The Tank Operations Contractor should improve the self-identification and reporting (i.e. per the PER process) of procedure non-compliances to facilitate causal determination, trending, and/or resolution.

S-WC-4-1
The TOC should determine if and when telephone approval is acceptable for the release of minor work, and proceduralize the requirements if it is deemed allowable.

S-WC-4-2
The TOC should determine the appropriate level of radiological controls for "Immediate Recovery Work" as discussed in TFC-OPS-MAINT-C-01, *Tank Operations Contractor Work Control*; these controls must mesh with Section 4.10 of TFC-ESHQ-RP_RWP-C-04, *Radiological Work Permits* (i.e. consistent terminology—"immediate recovery" vs "emergency").

S-WC-4-3
The TOC should include a requirement to consider the need to develop industrial hygiene and safety controls in Section 4.3 of TFC-OPS-MAINT-C-01, *Tank Operations Contractor Work Control*, when preparing for "Immediate Recovery Work."

S-WC-4-4
The TOC should include definitions for "troubleshooting" and "routine work" in the work control procedure, TFC-OPS-MAINT-C-01, *Tank Operations Contractor Work Control.*

S-WC-4-5
The TOC should revise Attachment B of TFC-OPS-MAINT-C-01, *Tank Operations Contractor Work Control*, to limit use of the word "ensure" when developing work documents; "ensure" is an ambiguous action word.

S-WC-4-6
The TOC should revise TFC-OPS-MAINT-C-01, *Tank Operations Contractor Work Control*, Section 4.4.1.3, Step 7, to remove ambiguity; the step currently directs the Field Work Supervisor/worker to "Follow applicable sections" of the procedure.

S-WC-4-7
WRPS should develop and conduct work control process training with shift managers and field work supervisors.

S-EM-60 10.1-1
Standing Order 07-008 should be revised to include a statement directing the length of time the Standing Order will remain in effect, and how the requirements of the order will be captured for future projects.

S-RCA-JON-8-1
Form A-6002-909, *Verification/Validation (V&V) Checklist* should be updated to require the Technical Authority to ensure critical tasks have been identified.

S-RCA-JON-8-2
Procedure TFC-OPS-MAINT-C-01, *Tank Operations Contractor Work Control* should contain critical task guidance.

S-JON-9-1
The 241-C-110 Transfer Survey Worksheet should be a controlled document/form to ensure that transcription errors are prevented.

S-RCA JON-13.1-1
Actions that comprehensively address the issue(s) identified in the CH2MHill Root Cause Analysis Report JON 13 should be included in the closure evidence files.

S-EM-62 OP.1 F-2-1
The Tank Operations Contractor should incorporate continuing training on Technical Safety Requirements for Shift Managers; training should include the basis for each TSR, and information from the DSA including relevant accident scenarios and unmitigated consequences.

S-EM-62 OP.1 SO-1-1
Reevaluate the processes of planning, scheduling and releasing daily work items.

APPENDIX A
Corrective Action Evaluation Forms

Corrective Action Evaluation Form
Type A JON ENG 1

JON/Finding:
Type A JON ENG-1, CH2M HILL needs to improve incorporation of the design features, testing, and operating limits/ specs into operating procedures associated with the S-102 tank and the Seepex pump to ensure its ability to move S-102 waste without becoming fouled.

Corrective Actions Reviewed:

CHG-ENG-1.1
Inactivate all retrieval and transfer Procedures.

CHG-ENG-1.2
Revise and implement (implement defined as procedure verification, validation, and training) the process for preparing waste retrieval and transfer operating procedures. The process will define requirements for how design features, operating limits and criteria, and retrieval process requirements are incorporated into operating procedures, including requirements for independent verification of valves in waste transfer routes and radiological monitoring requirements associated with implementing technical safety requirements (TSRs) for leak detection. The procedure will require a review of the acceptability of testing and operating experience on the retrieval pump(s) which will be used.

CHG-ENG-1.3
Revise and implement process for new retrieval equipment development to evaluate simulant testing

Documents Reviewed:

- TFC-OPS-OPER-C-49, *Development of Waste Retrieval and Transfer Operating Procedures*
- TFC-PLN-90 Rev 2, *Technology Development Management Plan*
- Training records for classes on TFC-OPS-OPER-C-49 and TFC-PLN-90
- Active and inactive procedures database, Washington River Protection Solutions Intranet
- TO-220-113, *Over-Ground Transfer from 241-C-110 to 241-AN-106 and Sluicing of Tank 241-C-110*
- Operations/Process Control Matrix and Verification and Validation Checklist for TO-220-113

Activities/Operations Observed:

None

Interviews:

- Acting Manager, West System Engineering, Washington River Protection Solutions
- Two Procedure Technical Writer/Editors, Base Operations, WRPS

A document review of the corrective actions and evidence files indicates adequate completion of the Judgment of Need corrective actions. Follow-up interviews were conducted to assess the effectiveness of the corrective actions. The results are that the corrective actions for JON ENG-1 have been effective in addressing the Judgment of Need.

Conclusions:

The JON as written specifically addressed the use of the SEEPEX pump for tank S-102. CH2M Hill's Corrective Actions expanded the scope of the JON to all tank retrieval and transfer procedures and all retrieval equipment. This was appropriate since the SEEPEX pump in Tank S-102 will not be used again, but the process improvement will be applied to any new technologies. Corrective Action ENG 1.1 to inactivate all retrieval and transfer procedures was confirmed complete by reviewing printouts from the on-line procedures database and noting that all retrieval and transfer procedures in effect as of the corrective action plan were marked inactivated and were not available for use. Corrective Action ENG 1.2 to revise and implement the process for procedure development was confirmed complete by reviewing the revised procedure TFC-OPS-OPER-C-49 and training records. Corrective Action ENG 1.3 to revise and implement the process for developing new retrieval equipment was confirmed complete by reviewing the revised Plan TFC-PLN-90 and training records.

The effectiveness of the corrective actions was evaluated by reviewing a tank waste transfer procedure that was issued using the revised procedure development process and interviewing several procedure writers and an engineering manager. Only one procedure has been issued under the revised development process, although several more are in various stages of development. Review of the procedure's process control matrix and interviews with the procedure writers indicate that the revised development process was fully implemented and institutionalized. The revised procedure involved using a new pump, and interviews with engineering staff and the procedure writers indicate that the equipment was tested with a simulant and under conditions expected in the tank, implementing the provisions of Corrective Action ENG 1.3.

Rating:

Effective

Recommendation for Completion:

None

Suggestions for Continued Improvement:

None

Reviewer:

Earl Hughes, DOE-HQ, Office of Health, Safety and Security

Corrective Action Evaluation Form
Type A JON ENG 2

JON/Finding: Type A JON ENG-2:
CH2M HILL needs to revise its design review processes, procedures and implementation to ensure approved designs are technically correct and satisfy the requirements of the DSA.

Corrective Actions Reviewed:

CHG-ENG-2.1:
Conduct an independent review of engineering design program issues and provide recommended corrective actions to strengthen the program and its implementation. Evaluate recommendations and implement corrective actions

CHG-ENG-2.2:
Develop process hazards analysis (PHA) procedures and processes to ensure identification of hazards and controls for both TSR level hazards, and higher frequency, lower consequence hazards that are of significance for emergency response and environmental compliance with emphasis on preventive controls over mitigative controls, including process to train and assign designated personnel as lead PHA team leaders.

CHG-ENG-2.3:
Revise design review procedures, using results of independent review as a guide. Clarify roles and responsibilities, and provide detailed guidance/criteria for review of in-house and subcontracted engineering design products. Define a graded approach for design review of engineering products, including requirements for intermediate design reviews and formal disposition of review comment resolutions.

CHG-ENG-2.4:
Establish and implement a process to perform a thorough extent of condition (EOC) review for systems connected to waste storage tanks to determine potential waste transfer paths and ensure that such systems incorporate applicable TSR controls. This process will be applied to each transfer prior to operation.

CHG-ENG-2.5:
Adopt and implement a management of change process similar to that described in Occupational Safety and Health Administration (OSHA) standard 29 CFR 1910.119, *Process Safety Management of Highly Hazardous Chemicals*.

DOE-MS-2.8:
Review the existing contractor process hazard analyses and associated design features for retrieval systems to ensure nuclear safety and other safety requirements are met. This action verifies implementation of effectiveness of action CHG-2.2.

Documents Reviewed:

- CH2M-PER-2007-1738
- E-STARs Report CH2M-PER-2007-1738
- E-STARS Report CH2M-PER-2007-1738.1
- E-STARS Report CH2M-PER-2007-1738.2
- E-STARS Report CH2M-PER-2007-1738.3
- E-STARS Report CH2M-PER-2007-1738.4
- E-STARS Report CH2M-PER-2007-1738.5
- Engineering Design Program Review, dated 10/9/2007
- S-102 Type A Accident Report: Supplementary Corrective Action Closure Package, E-Stars Task#: CH2M-PER-2007-1738.2
- TFC-ENG-DESIGN-P-17, Rev C-3, Design Verification
- RPP-RPT-37883, Rev 0, Design Review Report for the C-110 Waste retrieval System
- RPP-PLAN-40419, Rev 0, Design Verification Plan 241-C-111 Waste Retrieval System
- TFC-ENG-DESIGN-C-06, Rev G, Engineering Change Control
- TFC-CHARTER-37, Rev A, Waste Transfer Confinement Review Board
- TFC-ENG-FACSUP-C-26, Rev A, Waste Leak Path Evaluations
- RPP-RPT-38246, Rev 0 and A 241 C-110 Waste Retrieval System Process Hazard Analysis
- RPP-RPT-35922, Rev 0 and A 241 C-109 Waste Retrieval System Process Hazard Analysis
- TE-08-046, Technical Evaluation
- TE-08-047, Technical Evaluation
- TE-08-048, Technical Evaluation
- Operational Awareness Report, Report #3514

Activities/Operations Observed:

None

Interviews:

- WRPS Manager, Central Design Authority and Standards
- WRPS Engineering Program Specialist, Central Design Authority and Standards
- WRPS Nuclear Safety and Licensing Engineer (2)
- WRPS C-Farm Engineering Manager
- WRPS C-Farm Project Engineer
- WRPS Chairman, Waste Transfer Confinement Review Board
- WRPS Quality Assurance Engineer

Results:

A document review of the finding corrective actions and evidence files supporting completion of required actions indicate that all corrective actions have been adequately completed. Follow-up interviews were conducted to assess the effectiveness of the corrective actions to address the issues identified by JON ENG-2. The results are that the corrective actions for JON ENG-2 have been effective in addressing the Judgment of Need.

The design program independent review identified a need for independent and peer reviews, a reconstitution of the Design Authority position, and a management of change process for those design and process changes which are evaluated from a process safety perspective and do not require entry into the USQ process.

New process hazard analysis procedure TFC-ENG-DESIGN-C-35, "Process Hazard Analysis" and TFC-ENG-STD-28, "Process Hazard Analysis Standard" were developed to strengthen considerations of "impact of change on safety and health." Further enhancements to the PrHA process were developed that integrated the process hazard analysis process and the management of change process (ENG-2.5). DOE conducted a review of the PrHA process as part of the Type A CAP MS-2.8 in Operational Awareness Report #3514. The report stated that the PrHA process was adequate in evaluating processes for their impact on safety and health.

The development of the PrHA procedure and standard allows work process changes to be evaluated separately from (but not in lieu of) the safety basis development process. The process considers the complete spectrum of normal, abnormal, process upset, and accident conditions. The PrHA process requires project or individual Engineering Document Transmittals (EDTs) or Engineering Change Notices (ECNs) to be screened to determine whether a PrHA is required to assess the impact of the change. Screening also identifies the appropriate technique to evaluate the change. Review of training attendance rosters indicated that an adequate pool of personnel have been trained on the PrHA process. Review of waste retrieval system process hazard analyses indicate the PrHA process has been implemented and conforms to the expectations of the corrective actions. In addition, the PrHA reports reviewed were thorough and comprehensive. Effectiveness of ENG-2.2 is evident by the several PrHA sessions held that have afforded the opportunity for the identification of new accident scenarios, initiating causes and consideration of the appropriateness of existing controls.

At the time of the S-102 event, all engineering design was subcontracted to outside engineering firms. This is still the current practice. The Design Verification procedure was revised to clarify roles and responsibilities, provide detailed guidance for review of in-house and subcontracted engineering design products, define a graded approach for design review of engineering products, and require formal disposition of review comment resolutions. In addition, revisions were made to the Design Review Checklist to include an item for liquid waste handling systems and components and enhance considerations of credible non-standard conditions.

Prior to the S-102 event the design review team consisted of members of the integrated project team (project engineers, SMEs, nuclear safety engineers, operations personnel, etc.) and design reviews did not require formal documentation of comments, questions, or resolutions. The revised implemented design verification process requires an independent senior lead discipline engineer to participate on the design review team to provide independent and broad oversight of the review and requires formal comment resolution. The assessment team reviewed a design review report completed under the new process. It conformed to the expectations of the revised design verification procedure and appropriate engineering discipline leads were assigned to the review team. Comments documented on a completed Review Comment Record reviewed were logical and focused on compliance with requirements and requests for clarifications. One comment referenced the S-102 event indicating the consideration of past events and how they may apply to current designs and planned activities and is an indication of the effectiveness of ENG-2.1 and 2.3. All comments were formally resolved and recorded. Personnel interviewed

expressed confidence with the modifications made to the design process and that changes have not created a major impact on schedule.

Development of the Waste Leak Path Evaluations procedure provides the tools and methodology for engineers to perform technical evaluations of waste transfer retrieval system interfaces through which waste could be released. The Waste Transfer Confinement Review Board (WTCRB) was developed to provide the final check in the waste transfer process to verify design, routing, and interfaces. The WTCRB convenes prior to each waste transfer activity (approximately 10 transfer activities to date). All transfers since the S-102 event forward have undergone technical evaluation and review by the WTCR. A WTCRB quorum is one chairperson and one other member, both appointed by the Chief Engineer, but typical attendance at the WTCRB meetings includes SMEs and multiple engineering discipline personnel. Although the charter does requires WTCRB meeting minutes to be recorded, only the chairperson of the WTCRB personally maintains hand written meeting minutes for all previously held WTCRB meetings. As evidence of the effectiveness of ENG 2.4, early in the implementation of the WTCRB, several leak paths were identified that were not previously identified during design reviews or that were identified but inadequately dispositioned. These involved waste conveyance through electrical cables and the waste jet momentum leak scenario. The product of the waste transfer leak path process is a completed technical evaluation endorsed by the WTCRB.

Conclusion: The corrective actions as approved have been completed as described. Based on a review of documentation and discussions and interviews the reviewer has concluded that the completed corrective actions have been effective in addressing the JON ENG-2. This review also included an evaluation of the effectiveness of CH2M Hill Root Cause Analysis JONs 1, 2, 3, and 4.

Rating:

Effective

Recommendation for Completion:

None

Suggestions for Continued Improvement:

S-JON ENG-2-1
The WTCRB charter should require a readily accessible, retrievable record of board meeting minutes.

Reviewer:

Jacquelyn Carrozza, DOE-ID, Nuclear and Safety Performance

Corrective Action Evaluation Form
Type A JON ENG 3

JON/Finding:
Type A JON ENG-3, CH2M HILL needs to perform an engineering analysis of whether the S-102 pump can continue to be safely operated following the deformation that occurred when excessive shaft torquing was applied during maintenance.

Corrective Actions Reviewed:

CHG-ENG-3.1
Inactivate the retrieval S-102 pump.

CHG-ENG-3.2
Issue a lessons learned bulletin addressing the inadequate documentation and communication of the planned risk to be taken with the Seepex pump.

Documents Reviewed:

- CH2M Hill Problem Evaluation Request CH2M-PER-2007-1739 Rev 1
- CH2M Hill Engineering Change Notice 75287, *Inactivate the S-102 Retrieval Pump at Riser 7*
- CH2M Hill Engineering Change Notice 724596, *Removal of S-102's Retrieval Instrumentation and Electrical Power Systems*
- CH2M Hill Engineering Change Notice 724952, *S-102 Equipment Removal Closeout Inspection*
- Tank Farm Work Instruction CLO-WO-07-1340, *S-102 Remove Contaminated Equipment around R-7*
- Tank Farm Work Instruction CLO-WO-07-1545, *S-102 Dispose of Equipment outside the High Radiation Area*
- Tank Farm Work Instruction CLO-WO-07-1840, *S-102 Change Breather Filter to Radial Filter*
- CH2M Hill Lessons Learned Bulletin IB-07-040
- TFC-OPS-MAINT-C-01, REV N-9, *Tank Operations Contractor Work Control*
- TFC-ENG-FACSUP-C-02, REV B-10, *Operability/Technical Evaluations*
- 3-LDD-055, *Troubleshooting and Repair of Liquid Detector*
- Tank Farm Work Instruction TCF-09-1192, *Replace and test LD3 Relay on AW02D-WT-LDST-188*
- Tank Farm Work Instruction TFC-WO-09-1425, *Troubleshoot Low Insulation Resistance in AN Tank Farm*
- Tank Farm Work Instruction TFC-WO-09-1446, *241-AN VTP A-train Trouble Shoot Flow Sample System*

Activities/Operations Observed:

None

Interviews:

- Acting Manager, West System Engineering, Washington River Protection Solutions
- Manager, Base Operations Work Planning, Washington River Protection Solutions

Results:

A document review of the corrective actions and evidence files indicates adequate completion of the Judgment of Need corrective actions. Follow-up interviews were conducted to assess the effectiveness of the corrective actions. The results are that the corrective actions for JON ENG-3 have been effective in addressing the Judgment of Need.

Conclusions:

The action of the Judgment of Need (JON) as written was not carried out, but appropriate alternative actions were taken. The Original JON called for an engineering analysis to determine if the SEEPEX pump could be safely used following its overtorquing. Instead, DOE determined that the Tank S-102 retrieval work would be done with different equipment and techniques, so the pump was permanently inactivated. This obviated the need for an engineering analysis of the safety of its return to operations. During the initial analysis of the pump overtorquing, CH2M Hill realized that they should have better documented the engineering decisions they made when deciding to use torque beyond the manufacturer's recommendations. This led to the corrective action to issue a Lesson Learned Bulletin regarding the SEEPEX pump overtorquing decisions. The concepts of the Lesson Learned Bulletin are incorporated in procedures, and review of subsequent work packages and interviews with engineering and work planning staff indicate it is institutionalized.

Rating:

Effective

Recommendation for Completion:

None

Suggestions for Continued Improvement:

None

Reviewer:

Earl Hughes, DOE-HQ, Office of Health, Safety and Security

Corrective Action Evaluation Form
Type A JON ENG 4

JON/Finding:
Type A JON ENG-4, The safety basis needs to be changed by CH2M HILL/ORP to require that new primary pressure boundaries for S-102 be classified as Safety Significant. Existing S-102 installed systems, structures, and components need not be upgraded from their current classification, but should be treated nonetheless, to the maximum extent practical, as if they were Safety Significant

Corrective Actions Reviewed:

CHG-ENG-4.1
Conduct a control decision meeting, including CH2M HILL and ORP, to determine a revised control strategy for S-102 leaks (with potential application to other waste transfer leaks). The focus of the control strategy will be leak prevention in preference to leak mitigation. The control decision process will consider the safety designation of new and existing equipment as well as other controls that may be applied to prevent and/or mitigate waste leaks. The new control strategy will comply with existing DOE requirements, including DOE STD 3009 and 10 CFR 830. Based on the outcome of the control decision meeting, CH2M HILL will develop a safety basis amendment for submittal to ORP.

CHG-ENG-4.2
Review and approve submitted safety basis amendment as appropriate

Documents Reviewed:

- Tank Farms DSA, RPP-13033 REV 3
- Tank Farm DSA, RPP-13033 REV 2, ECN 725337 (Safety Significant waste transfer system)
- Tank Farm DSA, RPP-13033 REV 2, ECN 725645 (Waste Leak Evaluation Program)
- Tank Farms TSR, HNF-SD-WM-TSR-006, Rev 6
- Tank Farms TSR, HNF-SD-WM-TSR-006 REV 5, ECN 724337 (Safety Significant waste transfer system)
- Tank Farms TSR, HNF-SD-WM-TSR-006 REV 5, ECN 725645 (Waste Leak Evaluation Program)
- Letter S. J. Olinger to J. C. Fulton, 08-NSD-036, Approval of Safety Basis Amendment-045, For Safety-Significant Designation of Waste Transfer Primary Piping Systems Required by Corrective Action for JON ENG-4.1, dated July 18, 2008
- Klein, K. A., and R. J. Schepens, 2003, "Replacement of Previous Guidance Provided by RL and ORP," (letter 03-ABD-0047/0300642 to E. K. Thomson, Fluor Hanford, Inc., and E. S. Aromi, CH2M HILL Hanford Group, Inc., February 4), U.S. Department of Energy Richland Operations Office, and Office of River Protection, Richland, Washington.
- Interoffice Memo, CH2MHILL, 7G500-LJK-08-001, Control Decision Meetings Summary, January 9, 2008
- Letter J. C. Fulton to S. J. Olinger, CH2M-0800784, Submittal of the Safety Basis Changes for Safety Significant Designation of Waste Transfer Primary Piping Systems Required by the Corrective Action for JON ENG-4.1, March 30, 2008

- Letter J. C. Fulton to S. J. Olinger, CH2M-0800784 R1, Re-Submittal of the Safety Basis Changes for Safety Significant Designation of Waste Transfer Primary Piping Systems Required by the Corrective Action for JON ENG-4.1, July 9, 2008
- TFC-ENG-SB-C-06, Rev F-1, Safety Basis Development, December 21, 2005
- Letter from Klein and Schepens to Thomson and Aromi, 03-ABD-0047, Nuclear Safety Risk Ranking and Control Selection Guidelines, February 04, 2003
- RPP-RPT-32094, *Integrity Assessments for 241-C-108 Waste Retrieval Project.*
- RPP-RPT-34052, *Integrity Assessments for 241-C-109 Waste Retrieval Project.*
- PER CH2M-PER-2007-1740
- E-STARS Report CH2M-PER-2007-1740, CH2M-PER-2007-1740.1
- Causal Analysis for Type A Investigation Action ENG-4
- Letter W. Johnson to S. J. Olinger, WRPS-0900038, Request for Approval of Safety Basis Amendment to Add TSR AC 5.19, "Waste Leak Evaluation Program," dated Jan 22, 2009

Activities/Operations Observed:

None

Interviews:

- Nuclear Safety and Licensing Engineer (3)
- Manager, Nuclear Safety

Results:

A document review of the corrective actions and evidence files indicates adequate completion of the Judgment of Need corrective actions. Follow-up interviews were conducted to assess the effectiveness of the corrective actions.

The corrective actions focused on revising the control strategy for S-102 leaks, particularly waste transfer leaks. The control selection meetings focused on leak prevention vs leak mitigation. Although the hierarchy of control decision preference of preventative controls over mitigative was part of the Tank Farm Safety Basis control strategy prior to the S-102 event, the safety basis controls selected for waste transfer systems did not consistently select preventive and engineering controls in preference to mitigative and administrative controls when applied to new or upgraded equipment.

Safety significant designation of the primary confinement boundary for all tank farm waste transfer systems resulted from the control decision meetings. This included new systems which was the expectation of the JON and grandfather existing systems that conform to the requirements of *Washington Administrative Code* (WAC) 173-303-640, "Tank Systems." TSR level controls were developed to ensure the safety function of waste transfer primary piping systems.

The Tank Farms Safety Basis Amendment (SBA)-045 was approved by ORP nine months ago, on July 18, 2008, but neither the approval letter nor the Safety Evaluation Report (SER) provided implementation direction to the contractor. Although WRPS "expects" to implement the SBA by

September 30, 2009, ORP should provide the TOC a specified date for the implementation of Safety Basis Amendment-045. System integrity assessments and the Independent Qualified Registered Professional Engineer [IQRPE] certification for all systems authorized to transfer waste have been completed.

Additional improvements to the tank farm safety basis documents included updates to reflect current tank farm operations; removal of ambiguities; clarifications to definitions and the development of a TSR Programmatic Administrative Control (AC) for the Waste Leak Evaluation Program to identify and evaluate potential waste leaks or releases from tank farm facilities and operations (approved by ORP on April 20, 2009). The Waste Leak Evaluation Program was developed and implemented following the S-102 event and was submitted for approval as a TSR level programmatic administrative control January 2009. Key elements of the waste leak evaluation program requires the technical evaluations of potential motive forces and leak paths that could result in waste leaks from waste transfer systems and waste releases outside tanks from operations and equipment.

In October 2008, CH2M Hill commenced a Tank Farm DSA/TSR upgrade effort as part of a DSA improvement Plan. The update will implement DOE STD 3009 CN3 and DOE STD 1186 Specific Administrative Controls and involves the revision of the hazard analysis database, implementation of the methods and key elements of the waste leak evaluation program, and the evaluation of controls selection through conducting control decision meetings.

Conclusions:

The corrective actions as approved have been completed for JON ENG 4. The corrective actions have been effective in identifying and addressing weaknesses in the tank farm safety basis document and improving the control strategy. In addition, development and implementation of the Waste Leak Evaluation Program in conjunction with safety significant designation of the primary confinement boundary for all tank farm waste transfer systems and TSR level controls to ensure safety SSC performance are effective in reducing the probability of a leak in the waste transfer system.

Rating:

Effective

Recommendation for Completion:

None

Suggestions for Continued Improvement:

S-JON ENG-4-1
ORP should provide the TOC a specified date for the implementation of Safety Basis Amendment-045.

Reviewer:

Jacquelyn Carrozza, DOE-ID, Nuclear and Safety Performance

Corrective Action Evaluation Form
Type A Jon: EM-1

JON/Finding:
JON/ EM-1 - *Type A Accident Investigation Report* - CH2M HILL needs to analyze events of higher probability but lower consequence in the tank farms emergency planning hazards assessment, covering the full range of possible initiators and severity levels as required by DOE Order 151.1C, Comprehensive Emergency Management System, and it predecessors. Analysis needs to provide adequate documentation of assumptions.

Corrective Actions Reviewed:

CHG-EM-1.1
Type A Accident Investigation Report, Develop a documented process to evaluate the output of PHAs for higher probability, lower consequence hazards (see action CHG-ENG-2.2) in accordance with DOE Order 151.1C, *Comprehensive Emergency Management System*. The process will ensure that AOPs and emergency response procedures adequately address high probably, low consequence events.

CHG-EM-1.2
Type A Accident Investigation Report, Revise TFC-OPS-EP-D-04, Emergency Management Program Assessment Plan Guidance, to incorporate hazard assessment requirements of DOE G 151.1-2, *Technical Planning Basis*.

CHG-EM-1.3
Type A Accident Investigation Report, Issue a lessons learned on potentially inadequate emergency action levels when high probability, lower consequence events are not evaluated.

Documents Reviewed:

- TFC-OPS-EP-D-04, *Emergency Management Program Assessment Plan Guidance*
- TFC-ENG-DESIGN-C-36, *Hazards Assessment Consequence Calculation Process*
- FY2008-CH2M-I-0007, *Corrective Action Plan Implementation for Tank 241-S-102 Waste Spill End Point Assessment*
- FY2008-CH2M-I-0003, *S-102 Midpoint Assessment*
- DOE Order 151.1C, *Comprehensive Emergency Management System*
- DOE G 151.1-2, *Technical Planning Basis*

Activities/Operations Observed:

- April 7, 2009 AP Tank Farm High Efficiency Particulate (HEPA) Filter Failure Drill
- April 7, 2009 Radiological Waste Container Handling Accident Drill
- April 16, 2009 Emergency Preparedness C-110 Tabletop Drill

Interviews:

- IH Technician (2)
- Electrician (3)
- Nuclear Chemical Operator (2)
- Manager, IH Programs
- Manager, Training
- Manager, Security & Emergency Services/Events Investigation
- Manager, Shift Operations
- Manager, Senior Shift
- Coordinator, Emergency Preparedness

Results:

The effectiveness review for JON EM 1 included reviewing the three corrective actions (CA), select aspects of their closure documentation, how the CAs were implemented, and if the corrective actions will be effective in preventing recurrence of the deficiency identified in this JON.

CA-1.1 developed a process to evaluate the output of PHAs for higher probability, lower consequence hazards. This was accomplished by modifying TFC-ENG-DESIGN-C-36, *Hazards Assessment Consequence Calculation Process* to address these issues. This was completed in January 2008. The assessor reviewed the current version of the document (dated November 2008) and verified the changes remained in effect.

CA-1.2 revised TFC-OPS-EP-D-04, *Emergency Management Program Assessment Plan Guidance*, to incorporate hazard assessment requirements of DOE G 151.1-2, *Technical Planning Basis*. This was completed in December 2007. The assessor reviewed the current version of the document (dated January 2009) and verified the changes remained in effect.

CA- 1.3 required the contractor to issue a lessons learned on potentially inadequate emergency action levels when high probability, lower consequence events are not evaluated. This was accomplished in December 2007.

The assessor evaluated several drills involving an IH response and higher probability, lower consequence hazards. The drill provided evidence that the issues from JON EM -1 have been incorporated in the operations of the contractor.

Conclusions:

Closure actions for the S-102 event for Emergency Management have been closed. Closure documentation was found to be adequate, and changes have been effective in enhancing overall improvement in the EM program. The TF contractor has built into AOPs and other documentation the analysis of higher probability, lower consequence hazards and how to address these hazards in an emergency situation. Discussions with Senior Shift Managers and through

the observations of drills the assessors noted that the EM corrective actions have been effective in the areas of support organization response and overall EM program improvement.

Rating:

Effective

Recommendation for Completion:

None

Suggestions for Continued Improvement:

None

Reviewer:

Jack George, DOE-RL, Facility Representative, Program Manager
Courtney Blanchard, DOE-ORP, Facility Representative

Corrective Action Evaluation Form
Type A Jon: EM-2

JON/Finding:
JON/EM-2 - *Type A Accident Investigation Report* - CH2M HILL, Fluor Hanford, and AdvancedMed Hanford need to improve procedures used for responding to abnormal events at tank farm contractor facilities.

Corrective Actions Reviewed:

CHG-EM-2.1
Type A Accident Investigation Report, Issue lessons learned on the importance of complying with procedural direction to call 911 and verify compliance with requirements through completed drills.

FH-EM-2.2
Type A Accident Investigation Report, Conduct an EOC (Extent of Condition) review to determine if FH response procedures ensure: a.) the POC (Patrol Operations Center) is contacted via 911 at an appropriate time; b.) the necessary resources are requested and information is provided to the POD, and c.) the cause of a high radiation area be conservatively assumed to be a release, where appropriate, until determined otherwise.

FH-EM-2.3
Type A Accident Investigation Report, Revise and implement POC QRC (Quick Reaction Checklist) to ensure the crash phone announcement language is appropriate for the level of event.

FH-EM-2.4
Type A Accident Investigation Report, POC QRCs will be reviewed and modified (if required) to ensure adequacy for responding to abnormal events.

FH-EM-2.5
Type A Accident Investigation Report, Update and implement RLEP 2.4 to clarify and streamline notification steps.

AMH-EM-2.6
Type A Accident Investigation Report, Update and implement AMH-ADM-130C, Manager On Call, to ensure medical representation is sent to the site ECT upon notification of its activation.

DOE-EM-2.7
Type A Accident Investigation Report, Provide direction to Hanford Site contractors to review their procedures that direct 911 calls. Ensure calls are made at appropriate times and proper resources are requested.

Documents Reviewed:

- AMH-ADM-130C, revision 1, *Manager On Call,* September 26, 2007
- AMH-ADM-130C, revision 2, *Manager On Call Activation and Response Procedure,* March 27, 2009
- Email, Completion Documentation for AMH-EM-2.6, December 10, 2007
- Email, Please Read Before You Delete, I Acknowledge Reading FY09 AMH-ADM-130C of AMH
- No Notice Drill/Exercise Report, March 12, 2008
- Assessment and Exercise Logs for AMH
- AMH-QA-IA-09-028, Manager On Call Procedure Assessment Report
- AMH-QA-MA-08-056-03, AMH Emergency Preparedness Program Assessment Report
- *Fiscal Year (FY) 2008 Hanford Emergency Readiness Assurance Plan (ERAP) and Continuity Readiness Assurance Report*, dated December 1, 2008
- Hanford Emergency Operations Center, Emergency Plan Implementing Procedure (RLEP) 2.4, *Event Coordination Team*, revisions dated November 20, 2007 and January 22, 2009
- *Precautionary Take Cover Checklist 06-0600*, revisions dated October 10, 2007 and January 8, 2009

Activities/Operations Observed:

- March 10, 2008 Hanford Area Emergency Drill
- April 7, 2009 AP Tank Farm High Efficiency Particulate (HEPA) Filter Failure Drill
- April 7, 2009 Radiological Waste Container Handling Accident Drill

Interviews:

- Director, Emergency Preparedness, Fluor Hanford
- Director, Safeguards, Safeguards and Emergency Preparedness, CH2M HILL Plateau Remediation Project
- Manager, AMH Performance Assurance
- Manager, Contractor Support, Fluor Hanford Emergency Management
- Manager, Site Emergency Preparedness Program, Fluor Hanford Emergency Management
- Project Engineer, Security and Emergency Services Division, U.S. Department of Energy, Richland Operations Office

Results:

The document review and interviews of the corrective actions task associated with both AdvanceMed Hanford (AMH) and the Fluor Hanford (FH) Emergency Preparedness organizations supporting this JON were complete, effective, and sustainable.

Since the completion of the initial corrective action task, AMH has performed numerous assessments and has participated in three site exercises. The assessment and exercises have led to the identification of several continued improvement items. The most recent improvement has

integrated the Manager On Call (MOC) improvement with the Medical Provider On Call (MPOC) process to include not only exercise response but actual emergency event response. The AMH procedure change and corrective action management process are being utilized to complete the improvement to ensure that both the MOC and MPOC support the Event Coordination Team (ECT) and Emergency Operations Center (EOC) as required by the corrective action task.

Likewise, continuing field exercises coordinated by the FH Emergency Preparedness organization have demonstrated ongoing efficacy of corrective actions relating to take cover actions, response to abnormal events through implementation of Quick Reaction Checklists, and streamlining of notification communications. Corrective actions relevant to communication via the "crash phones" have been carried over to the Hanford Site Emergency Alerting System that is now in effect. Specifically, take cover actions continue to be implemented via the 'Precautionary Take Cover Checklist 06-0600'.

At the time of contractor transition in October 2008, almost all FH-managed hazardous facilities were transferred over to the CH2M HILL Plateau Remediation Corporation. Corrective actions for the associated emergency response procedures of these facilities remain intact for clear instructions to call 911, information necessary to report to the Patrol Operations Center, and identification of necessary services or actions to be requested from the Patrol Operations Center. There have been no additional hazardous facilities identified that would require implementation of the corrective actions.

DOE provided direction to Hanford contractors to review their procedures regarding 911 calls to ensure calls were made at the appropriate times and proper resources were requested. Each contractor provided its review results and copies of procedure changes where appropriate to ensure that 911 was called in appropriate circumstances, necessary resources were requested, and information was provided to the Patrol Operations Center. Effectiveness was observed by the assessor during observing the March 10, 2008 Hanford Area Emergency Drill, the April 7, 2009 AP Tank Farm High Efficiency Particulate (HEPA) Filter Failure Drill, and April 7, 2009 Radiological Waste Container Handling Accident Drill. In these drills the Building Emergency Director gave direction to the Incident Command Post (ICP) Communicator to make the appropriate 911 call. Effectiveness will continue to be determined in future quarterly exercises and drills.

Conclusions:

The AdvancedMed Hanford and Fluor Hanford Emergency Preparedness organizations have improved the procedures used for responding to abnormal events at tank farm contractor facilities. The relevant procedure changes remain intact, and met the requirements of this JON.

Rating:

Effective

Recommendation for Completion:

None

Suggestions for Continued Improvement:

None

Reviewers:

Jack George, DOE-RL, Facility Representative, Program Manager
Courtney Blanchard, DOE-ORP, Facility Representative
Mike Flasch, WRPS, Quality Assurance Engineer
Mike Silvia, WRPS

Corrective Action Evaluation Form
Type A Jon: EM-3

JON/Finding:
JON/ EM-3 - *Type A Accident Investigation Report* - CH2M HILL and Fluor Hanford need to correct weaknesses and inconsistencies in the implementation of take cover protective actions.

Corrective Actions Reviewed:

FH-EM-3.1
Type A Accident Investigation Report, Revise and implement applicable DOE-0223 (Site-wide emergency response procedures) to include steps to evaluate the need for continued protective actions, provide criteria and processes to relax protective actions if conditions warrant, and provide appropriate information to those who may contact the ICP for direction.

FH-EM-3.2
Type A Accident Investigation Report, Revise and implement associated emergency response organization training lesson plans.

FH-EM-3.3
Type A Accident Investigation Report, Identify and train emergency response organization members impacted by the procedure changes.

FH-EM-3.4
Type A Accident Investigation Report, Revise HGET to provide additional information to ensure the desired actions are taken during take cover conditions.

FH-EM-3.5
Type A Accident Investigation Report, Develop and distribute a just-in-time bulletin to communicate the lessons learned addressing take cover actions.

FH-EM-3.6
Type A Accident Investigation Report, Provide written instruction to Hanford Patrol and ECT/EOC regarding instructions to give employees during a take cover event.

FH-EM-3.7
Type A Accident Investigation Report, Revise and implement POC QRC to identify access control points for take cover areas.

FH-EM-3.8
Type A Accident Investigation Report, Perform an effectiveness review of JON EM-2 and EM-3 corrective actions.

FH-EM-3.9
Type A Accident Investigation Report, Conduct a drill, or series of drills, to verify effectiveness of Actions FH-EM-2.5, AMH-EM-2.6, FH-EM-3.1, FH-EM-3.6, FH-EM-3.7, and AMH-HE-2.12.

Documents Reviewed:

- *Fiscal Year (FY) 2008 Hanford Emergency Readiness Assurance Plan (ERAP) and Continuity Readiness Assurance Report*, dated December 1, 2008
- *Precautionary Take Cover Checklist 06-0600*, revisions dated October 10, 2007 and January 8, 2009
- Hanford Emergency Operations Center, Emergency Plan Implementing Procedure (RLEP) 1.1, *Recognizing and Classifying Emergencies*, revisions 17 dated January 14, 2008 and 19 dated June 5, 2008
- Hanford Emergency Operations Center, Emergency Plan Implementing Procedure (RLEP) 2.3.22, *Site Emergency Director*, revisions 15 dated January 14, 2008 and 17 dated January 7, 2009
- Hanford Emergency Operations Center, Emergency Plan Implementing Procedure (RLEP) 2.3.34, *Consequence Assessment Director*, revisions 11 dated January 14, 2008 and 12 dated February 28, 2008
- Hanford Emergency Operations Center, Emergency Plan Implementing Procedure (RLEP) 2.3.39, *UDAC Assessment Manager*, revisions 14 dated January 14, 2008 and 15 dated February 28, 2008
- Hanford Emergency Operations Center, Emergency Plan Implementing Procedure (RLEP) 3.11, *Exercise and Emergency Response Evaluations*, revision7
- *Precautionary Take Cover Checklist 06-0600*, revisions dated October 10, 2007 and January 8, 2009
- *Hanford Fiscal Year (FY) 2008 Second Quarter Limited Exercise Evaluation*, dated April 2008
- *Hanford 2008 Field Exercise Evaluation*, dated July 28, 2008

Activities/Operations Observed:

- March 10, 2008 Hanford Area Emergency Drill
- April 7, 2009 AP Tank Farm High Efficiency Particulate (HEPA) Filter Failure Drill
- April 7, 2009 Radiological Waste Container Handling Accident Drill

Interviews:

- Director, Emergency Preparedness, Fluor Hanford
- Manager, Contractor Support, Fluor Hanford Emergency Management
- Manager, Site Emergency Preparedness Program, Fluor Hanford Emergency Management
- Project Engineer, Security and Emergency Services Division, U.S. Department of Energy, Richland Operations Office
- Specialist, Emergency Preparedness (2)

Results:

The take cover corrective actions associated with the Fluor Hanford (FH) Emergency Preparedness organization supporting this JON were complete, effective and sustainable.

Corrective actions implemented in response to two take cover issues identified during the fiscal year (FY) 2008 second quarter limited exercise evaluation in April 2008 were completed in November 2008 (300 Area Emergency Alerting System siren activation) and April 2009 (PNNL personnel having received incorrect approval to eat and drink during a take cover scenario), respectively. Take cover coordination and direction were observed as effectively implemented due to an absence of issues identified during subsequent site and Tank Farm drill evaluations.

Training materials developed for presentation to Emergency Response Organization personnel were effective in identifying and communicating procedure changes developed to improve take cover coordination actions. All relevant Emergency Response Organization personnel have completed the training. In addition the Hanford General Employee Training (HGET) emergency preparedness module has been upgraded to emphasize the Hanford site take cover response expectations.

The Emergency Plan Implementing Procedures that were revised to support corrective action implementation were reviewed to ensure that the relevant procedure contents were not altered during subsequent revisions; confirmation was achieved that the necessary procedure contents remain intact.

Confirmation was achieved that the series of contractor transitions in October 2008 did not adversely impact the ability of the Fluor Hanford Emergency Preparedness organization to coordinate site emergency response activities, or the ability of the Hanford Patrol organization to support emergency response conditions. The present Hanford contractors are positioned to respond effectively to emergency response conditions.

Conclusions:

The Fluor Hanford Emergency Preparedness organization has improved the procedures and processes implemented in response to 'take cover' scenarios. The relevant procedure changes remain intact, and met the requirements of this JON.

Rating:

Effective

Recommendation for Completion:

None

Suggestions for Continued Improvement:

None

Reviewer:

Mike Flasch, WRPS, Quality Assurance Engineer
Jack George, DOE-RL, Facility Representative, Program Manager

Corrective Action Evaluation Form
Type A JON: HE-1

JON/Finding:
JON/ HE-1 - *Type A Accident Investigation Report* - CH2M HILL needs to integrate industrial hygiene into responding to abnormal events which may involve a chemical release. In addition, CH2M HILL needs to establish and implement industrial hygiene procedures, sampling and monitoring protocols, and training of industrial hygiene staff for responding to the range of abnormal events identified in Tank Farm Hazard Analysis Documents.

Corrective Actions Reviewed:

CHG-HE-1.1
Type A Accident Investigation Report, Prepare training for shift managers, workers, and their supervisors on industrial hygiene role in response to abnormal events and shift manager responsibilities in initiating effective event response.

CHG-HE-1.2
Type A Accident Investigation Report, Conduct training for shift managers, workers, and their supervisors on industrial hygiene role in response to abnormal events and shift manager responsibilities in initiating effective event response.

CHG-HE-1.3
Type A Accident Investigation Report, Update tank farms chemical hazard reference and information materials to assist the shift manager in making decisions regarding response to chemical incidents.

CHG-HE-1.4
Type A Accident Investigation Report, Implement tank farms chemical hazard reference and information materials per CHG-HE-1.3, in shift offices.

CHG-HE-1.5
Type A Accident Investigation Report, Conduct training for industrial hygienists and technicians on response to abnormal events per the AOPs.

CHG-HE-1.6
Type A Accident Investigation Report, Enhance and implement industrial hygiene monitoring for waste transfer during abnormal events.

CHG-HE-1.7
Type A Accident Investigation Report, Conduct training for industrial hygienists, industrial safety professionals, field work supervisors, procedure writers, work planners, and operations managers on expectations for use of job hazard analysis processes, including the worksite hazard analysis, as part of the development, maintenance, and use of technical procedures and work instructions.

Documents Reviewed:

- Training Activity TO7043 - *IH Role in Abnormal Events*
- Training Activity TA-07041 - *Job Hazard Analysis Process*
- Training Activity TA-08041- *EM - Identification of Exposed Personnel*
- Training Activity TO801 8 - *Case Manager Coordination w/AMH*
- Training Activity TO7044 - *Tank Farm Vapor Information Sheet*
- Training Activity TO8028 - *IH Sampling for Waste Transfer/Retrieval for Potential Abnormal Events*
- Training Activity - *Dose Reconstruction IH Sampling for Waste Transfer Abnormal Events*
- Training Course 357103 - *Cycle 3 Industrial Health Technician Continuing Training*
- TF-AOP-003, *Response to Elevated Airborne Radioactivity, Rev.* B- 7
- TF-AOP-0 11, *Response to Chemical and/or Radiological Events, Rev. C-1*
- TF-AOP-015, *Response to Reported Odors or Unexpected Changes to Vapor Conditions, Rev. B-18*
- TF-AOP-018, *Response to Electrical, Water, Air, or Pressurized Gas Cylinders High Energy Release, Rev.* B-2
- TFC-ESHQ-S-CMLI-C-0 1, *Injury and Illness Recordkeeping, Rev. C-2*
- TFC-ESHQ-S - CMLI-C-02, *Injury and Illness Events, Rev.* B-2
- TFC-ESHQ-S CMLI-CD-03, *Workers Compensation Program, Rev. C*
- TFC-OPS-OPER-CD-01, *Event Notification, Rev. A*
- TFC-ESHQ-S IH-C-46, *IH Reporting and Records Management, Rev. B-1*
- Standing Order CO-07-009, *Industrial Hygiene Dose Reconstruction Sampling for Waste Transfer and Retrievals*
- Standing Order WFO-07-006, *Industrial Hygiene Dose Reconstruction Sampling for Waste Transfer and Retrievals*
- *Shift Office On-Call List,* RPP-IP-0732, release 135

Activities/Operations Observed:

- April 7, 2009 AP Tank Farm High Efficiency Particulate (HEPA) Filter Failure Drill
- April 7, 2009 Radiological Waste Container Handling Accident Drill
- April 16, 2009 Emergency Preparedness C-110 Tabletop Drill

Interviews:

- Manager, IH Programs
- Manager, Training
- Manager, Security & Emergency Services/Events Investigation
- Manager, Shift Operations
- Manager, Senior Shift
- Coordinator, Emergency Preparedness

Results:

The effectiveness review for JON HE 1 included reviewing the seven corrective actions (CA), select aspects of their closure documentation, how the CAs were implemented, and if the corrective actions will be effective in preventing reoccurrence of the deficiency identified in this JON. The CAs 1.1, 1.2, 1.5, and 1.7 pertained to training deficiencies mostly in the area of Industrial Hygiene engagement during the S-102 response. Corrective Actions 1.3, 1.4, and 1.6 address enhancements needed for the shift manager's to integrate industrial hygiene into responding to abnormal events which may involve a chemical release.

The Tank Farm contractor used an activity tracking information sheet to systematically analyze the training requirements and to ensure the appropriate personnel were trained. The assessor identified that the personnel identified for this training captured the audience required by these CAs and an exam was administered to verify proficiency. The training covered industrial hygiene's role and what actions were to be taken by personnel, including the shift manager(s), in responding to abnormal events. The activity tracking information sheet No. T07043 was closed on 12/11/07 and training material was included in the evidence package for this corrective action. This training was required for Shift Managers, NCOs, IHTs, HPTs, PICs, OEs, SOE, Maintenance Craft for Waste Feed Operations, Closure Operations, and the Sampling Organization of Analytical Technical Services (ATS). In addition to this training, WRPS made a decision to train IH and IHT in ERO, which was completed. The deliverable for this action was completion of training for 90% of the target audience, which was verified completed.

Prior to the July 27, 2007 S-102 event, Senior Shift Managers referenced the tank vapor information sheet (TVIS) during a tank farm chemical incident. There were 18 different TVIS for all of the tank farms. These TVIS did not readily assist the shift managers in making decisions regarding response to chemical incidents as identified in this JON. To address the deficiency, a tank farm chemical vapor information summary was developed for the A, B, S, and T Complex and the C and U Tank Farms. The tank farm chemical vapor information summary included the chemicals of concern with their respective action limits, odor thresholds, and acute symptoms of over exposure for each area. This document also referenced the safety and health contacts and what actions to take if exposure to tank waste occurred. A briefing was held to discuss the information presented on the summary sheet. Those in attendance included Tank Farms managers, health physics technicians, industrial hygiene technicians, operators, maintenance, and field work personnel. A written knowledge check was given to all attendees. Attendance rosters were provided in the evidence package. Training for the IHs and IHTs was made part of the continuing training, as indicated in the Training Activity Sheet for course number 357103, Rev #1, which was included in the evidence package. The list of IHs and IHTs who attended the training was also included in the evidence package.

The assessor reviewed documentation at the shift office to ensure IHT engagement was integrated into Abnormal Operating Procedures (AOP) and discussed IHT involvement with IH Program, Shift Operations, and Senior Shift Managers. The Shift Manager recited the tank farms vapor information sheet content, knew exactly where they were located in his office, and appropriately explained when he used them. The IH Program, Training, and Shift Operations Managers independently explained that a significant deficiency in the S-102 event response was

not engaging IHTs, rather than IHTs performance. The IH Program Manager stated that WRPS management had made a decision to have ERO training assigned for IHs and IHTs. This ERO training was completed. The IH Program, Training, Shift Operations, and Senior Shift Managers stated that IH involvement in emergency and operational responses will initially parallel the radiological response. Reviewing the AOPs identified that IH involvement commenced with the radiological response.

The assessors observed the April 7, 2009 AP Tank Farm High Efficiency Particulate (HEPA) Filter Failure Drill and April 7, 2009 Radiological Waste Container Handling Accident Drill at the 222S Laboratory. During both drills the IH and radiological engagement occurred during the initial response to the event. The HEPA Filter Drill required IH to set-up and perform vapor samples where the Waste Container Handling Accident Drill required no IH sampling. However, the Chemical Hazards Assessor during the Waste Container Handling Accident Drill did address the potential chemical exposure hazard in a timely fashion. For this drill scenario no chemical hazard exposure existed. The assessor noted that for both accident scenarios a hazardous chemical aspect to the event would have increased and demonstrated proficiency in addressing a more significant IH event.

Conclusions:

Closure actions for the S-102 event for Industrial Safety and Hygiene have been completed. Closure documentation was found to be adequate, and changes have been affective in enhancing overall improvement in the IH program. The TF contractor has built into AOPs, and other documentation, the need to engage IH support during operational and emergency responses. The assessors noted that the Industrial Safety and Hygiene corrective actions have been effective in the areas of support for organization response and overall IH program improvement though discussions with management and the observations of drills.

Rating:

Effective

Recommendation for Completion:

None

Suggestions for Continued Improvement:

S-HE-1-1
WRPS should revise drill scenarios to include a chemical attribute that requires more in-depth IH response which may include a worker(s) in contact with tank waste, chemical spill, vapor event, etc.

Reviewer:

Courtney Blanchard, DOE-ORP, Facility Representative

Corrective Action Evaluation Form
Type A JON HE-2

JON/Finding:
JON/HE-2 - *Type A Accident Investigation Report* - The Hanford Fire Department, managed by Fluor Hanford, needs to improve its emergency medical technicians/paramedics performance in the areas of improved documentation of patient encounters and communications with AdvanceMed Hanford; more frequent reviews of records by physicians is one needed element in the efforts to enhance documentation of patient encounters.

Corrective Actions Reviewed:

HE-2
Type A Accident Investigation Report, Conduct an extent of condition (EOC) review.

FH-HE-2.1
Type A Accident Investigation Report, Work with AdvanceMed Hanford to create a form specific for after care instructions following a work place injury, exposure, or potential exposure that requires the employee to report to the contractor's OMSP.

FH-HE-2.2
Type A Accident Investigation Report, Revise Standard Operating Guideline 2.B.4, Revision 0, Ambulance Responses, to eliminate references to the patient contact information form.

FH-HE-2.3
Type A Accident Investigation Report, Revise Standard Operating Guideline 3.A.9, Revision 0, Response To Radiologically Posted Areas, to include the notification of the contractor's OMSP physician on call for chemical and radiological material exposures. The names of employees required to report to the OMSP will be provided to the OMSP for follow-up.

FH-HE-2.4
Type A Accident Investigation Report, Cancel Standard Operating Guideline 3.A.12, Revision 0, Patient Contact Information Form Use.

FH-HE-2.5
Type A Accident Investigation Report, Train personnel to the revised Standard Operating Guidelines 2.B.4 and 3.A.9, the new procedure developed in Action FH-HE-2.10, and the new after care instruction form developed in Action FH-HE-2.1.

FH-HE-2.6
Type A Accident Investigation Report, Invite the Benton County Medical Program Director to the Hanford Fire Department monthly emergency medical services meetings.

FH-HE-2.7
Type A Accident Investigation Report, Provide "Emergency Medical Response To Hazardous Materials" refresher training to paramedics.

FH-HE-2.8
Type A Accident Investigation Report, Provide "Hazardous Material Awareness and Operations" refresher training to paramedics and emergency medical technicians.

FH-HE-2.9
Type A Accident Investigation Report, Communicate expectations that the patient care report will be completed to provide adequate information using the subjective, objective, assessment, plan format so that this information can be provided to the contractor's OMSP.

FH-HE-2.10
Type A Accident Investigation Report, Develop and implement a new procedure that will ensure that the contractor's OMSP is informed when employees are involved in actual or potential chemical and radiological material exposures.

FH-HE-2.11
Type A Accident Investigation Report, Perform an effectiveness review of corrective actions.

AMH-HE-2.12
Type A Accident Investigation Report, Update and implement AMH-CS-385B, *On-Call Medical Response to Site Emergencies Policy* and AMH-CS-385C, *On-Call Medical Response to Site Emergencies* procedure to ensure the HFD/AMH notification process for potential chemical exposures is effective.

Documents Reviewed:

- Standard Operating Guideline 3.A.9, Revision 0, *Response To Radiologically Posted Areas*
- Standard Operating Guideline 3.A.12, Revision 0, *Patient Contact Information Form Use*
- AMH-CS-385B, *On-Call Medical Response to Site Emergencies Policy, May 29, 2008*
- AMH-CS-385C, *On-Call Medical Response to Site Emergencies, May 28, 2008*
- No Notice Drill/Exercise Report, March 12, 2008
- Email, Quarterly Meetings of AMH SOMD with HFD/FH
- Email, FOH Recommendations from April Visit – AMH's Compliance and Completion of Documentation AMH-HE-2.12 and 08-SES-002-02
- Email, AMH-CS-385C – On Call Medical response to Site Emergencies Policy.doc,
- AMH-CS-385C On Call Medical Response to Site Emergencies Procedure.doc
- EMS Community Meetings - List of Meetings involving SOMD, HFD and Tri-Cities Community Emergency Medical Coordinator
- Site Form BC-6004-463, *Hanford Fire Department – Workplace Injury/Exposure After-Care Instructions*, revision 1
- Hanford Fire Department Standard Operating Guideline 2.B.4, *Ambulance Responses*, revision 1 dated October 29, 2007 (not revised since revision 1)

- Hanford Fire Department Standard Operating Guideline 3.A.9, *Responses to Radiologically Posted Areas*, revision 0 and revision 1 dated October 29, 2007
- Hanford Fire Department Standard Operating Guideline 3.A.15, *Treatment and Documentation of Workplace Injuries/Exposures*, revision 0 dated October 29, 2007
- Minutes – Mid Columbia EMS & Trauma Council, February 2 and March 2, 2009
- *Fiscal Year (FY) 2008 Hanford Emergency Readiness Assurance Plan (ERAP) and Continuity Readiness Assurance Report*, dated December 1, 2008
- *Hanford Fiscal Year (FY) 2008 Second Quarter Limited Exercise Evaluation*, dated April 2008
- *Hanford 2008 Field Exercise Evaluation*, dated July 28, 2008

Activities/Operations Observed:

None

Interviews:

- Chief, Hanford Fire Department
- Training and Medical Services Officer, Hanford Fire Department
- Secretary, Hanford Fire Department
- Manager, AMH Performance Assurance
- Specialist, Emergency Preparedness (2)

Results:

The document review and interviews of the corrective actions task associated with both AdvancedMed Hanford (AMH) and the Fluor Hanford (FH) Fire Department organizations supporting this JON were complete, effective and sustainable.

The meetings are scheduled by the FH Fire Department administrative staff. AMH has participated in the meetings and since 2007, with seven meetings held. The requirement to attend these meetings is listed in the procedure.

Improved documentation of patient encounters and communications with AMH has been effectively implemented through specific documented expectations such as the following:

- After care activities following a work place injury, exposure or potential exposure that requires the employee to report to the contractor's On-site Medical Service Provider (OMSP))
- Ambulance response
- Notification of the contractor's OMSP physician for chemical and radiological material exposures

The FH Fire Department Standard Operating Guidelines (SOG) that were revised to support corrective action implementation were reviewed to ensure that the relevant Guideline contents were not altered during subsequent revisions; confirmation was achieved that the necessary SOG

contents remain intact. Where necessary, new forms generated to support corrective actions have been entered into the 'site forms' web page to provide configuration control.

Corrective actions that were implemented to train personnel to the SOG changes were verified to encompass all of the relevant personnel; also, the training materials provided in-depth information to ensure information transfer. Personnel who had not participated in the training activities prior to closure of the corrective action task were verified to have subsequently completed the training.

A corrective action to "Invite the Benton County Medical Program Director to the Hanford Fire Department Monthly Emergency Medical Services Meetings" was observed to be implemented effectively. Following formal invitation to participate in these meetings on October 22, 2007, review of several recent meeting minutes for the Mid-Columbia EMS & Trauma Council confirmed relevant participation.

Recent emergency preparedness exercises have not indentified any adverse performance issues by the emergency medical technicians/paramedics in event response.

Conclusions:

The Hanford Fire Department has improved its emergency medical technicians/paramedics performance in the areas of improved documentation of patient encounters and communications with AdvanceMed Hanford. The Hanford Fire Department updated their Standing Operating Guidelines, met with AMH and Benton County to resolve these issues. Then they trained their employees on the updated processes. Reviews of the Standing Operating Guidelines and interviews with Fire Department and AMH have verified that these actions are effective.

Rating:

Effective

Recommendations for Completion:

None

Suggestions for Continued Improvement:

None

Reviewers:

Mike Flasch, WRPS; Quality Assurance Engineer
Mike Silvia, WRPS;
Jack George, DOE-RL, Facility Representative, Program Manager

Corrective Action Evaluation Form
Type A JON HE-3

JON/Finding:
JON/HE-3 - *Type A Accident Investigation Report* - CH2M HILL, Fluor Hanford, and AdvanceMed Hanford need to improve medical monitoring, documentation, and accountability of individuals with health symptoms and/or complaints following an accident.

Corrective Actions Reviewed:

CHG-HE-3.1
Type A Accident Investigation Report, Train response personnel and appropriate operations and programs managers on the personnel identification process.

CHG-HE-3.2
Type A Accident Investigation Report, Revise and implement procedures as necessary to ensure appropriate case management of exposed personnel and coordination with AMH.

CHG-HE-3.3
Type A Accident Investigation Report, Provide medical surveillance for workers potentially affected by the S-102 spill through the case management process to ensure that follow-on testing and consultation is completed on schedule per recommendations of Health Effects Report RPP-RPT-34902.

FH-HE-3.4
Type A Accident Investigation Report, Revise HNF-PRO-077, Reporting, Investigating, and Managing Health, Safety, and Property/Vehicle Events, to clarify that employees involved in events with potential exposures are required to report to the contractor's Occupational Medical Service Provider (OMSP) for evaluation and follow-up, and that managers of the potentially affected employees require the employees to report to the OMSP.

FH-HE-3.5
Type A Accident Investigation Report, Issue a safety bulletin (contextually explaining the requirements and reasoning for reporting to OMSP and explaining the changes to HNF-PRO-077 and to the Hanford Fire Department's process for potential exposures) to disseminate the information to employees and managers.

FH-HE-3.6
Type A Accident Investigation Report, Perform an effectiveness review of corrective actions.

FH-HE-3.7
Type A Accident Investigation Report, Develop a Site-wide process to make contact with those potentially exposed to chemical or radiological hazards away from an event scene, and provide medical evaluation and follow-up as needed.

AMH-HE-3.8
Type A Accident Investigation Report, Update AMH-CSS-326C, *Patient Results Notification* procedure to ensure consistency in the notification process.

AMH-HE-3.9
Type A Accident Investigation Report, Review existing laboratory tests against suggested changes recommended in the Cohort Medical Monitoring Report and update documents as appropriate.

AMH-HE-3.10
Type A Accident Investigation Report, Update AMH-CS-140A, *Case Management Plan* and implementing documents to reflect necessary changes for the medical monitoring process.

AMH-HE-3.11
Type A Accident Investigation Report, Provide training of new/revised procedures to staff.

AMH-HE-3.12
Type A Accident Investigation Report, Develop and implement event exposure tracking database.

DOE-HE-3.13
Type A Accident Investigation Report, Provide direction to Hanford Site contractors to review/revise their procedures, ensuring that all employees involved in potential exposure events are required to report to the contractor's OMSP for evaluation.

DOE-HE-3.14
Type A Accident Investigation Report, Perform an independent assessment of the effectiveness of AMH's corrective actions. This review should also examine the level and effectiveness of RL oversight of AMH. The review will be performed either by RL staff independent of line management responsible for AMH, or an external reviewer such as the U. S. Public Health Service.

Documents Reviewed:

- Health Effects Report RPP-RPT-34902
- HNF-PRO-077, *Reporting, Investigating, and Managing Health, Safety, and Property/Vehicle Events*
- AMH-CSS-326C, rev 2, *Patient Results Notification Procedure,* June 17, 2008
- Email, Post-Exposure Lab Appt-CAP Validation
- Assessment and Exercise Logs for AMH
- AMH-QA-09-004 Re-Measure-Follow up to Exposure CAP, October 28, 2008
- Training Roster for new and revised procedures under the Type CAP AMH-HE-3.11
- Memo: Exposure Protocols, December 19, 2007
- *(EXP) Exposure and Unusual Event Service*, July 21, 2008
- *(EXREV) Exposure and Unusual Event – Review of Lab Results*, July 21, 2008
- *(EXP1/EXP2/EXP3) Exposure and Unusual Event Follow Up Monitoring*, July 21, 2008
- *(EXP1/EXP2/EXP3) Exposure and Unusual Event Follow Up Monitoring*, April 15, 2009
- AMH-CS-140A, Rev 4, *Case Management Plan,* December 12, 2007
- AMH-CS-143C, rev 1, *Exposure Procedure*, December 20, 2007

- AMH-CS-143C, rev 1, *Exposure Procedure*, October 29, 2008
- *(CARPV) Previous Carcinogen Exposure Program*, June 2, 2008
- *Case Management End of Day Tracking* Desk Instruction, December 31, 2008
- *Daily Updates to Case Management File* Desk Instruction, March 16, 2009
- *Generate New Case Management Patient File* Desk Instruction, March 18, 2009
- *Work Suitability Evaluation (WSE)* Desk Instruction, October 7, 2008
- *Exposure Patient Tracking* Desk Instruction, February 3, 2009
- Staff Meeting Agenda, Procedure Training for Type A CAP
- *Tracking Group Exposure (TGE) Systems Design Description*, Revision 1.1, December 11, 2007
- NRSCM022 – Exposure Results Pending Report (7 days or greater), April 9, 2009
- TFC-ESHQ-S_CMLI-C-02, *Illness and Injury Event*
- TRF-ERP-013, *Emergency Response Procedure 013 Tank Farm Worker Emergency Response*
- TFC-ESHQ-S_CMLI-C-0, *Injury and Illness Recordkeeping*

Activities/Operations Observed:

- April 7, 2009 AP Tank Farm High Efficiency Particulate (HEPA) Filter Failure Drill
- April 7, 2009 Radiological Waste Container Handling Accident Drill
- April 16, 2009 Emergency Preparedness C-110 Tabletop Drill

Interviews:

- IH Technician (2)
- Electrician (3)
- Nuclear Chemical Operator (2)
- Manager, IH Programs
- Manager, Training
- Manager, Security & Emergency Services/Events Investigation
- Manager, Shift Operations
- Manager, Senior Shift
- Coordinator, Emergency Preparedness
- Manager, AMH Performance Assurance
- Team Lead, AMH Special Projects
- Manager, AMH Case Management
- DOE Facility Representative, ORP
- HAMTC Safety Representative
- Director, Emergency Preparedness, Fluor Hanford
- Manager, Contractor Support, Fluor Hanford Emergency Management
- Manager, Site Emergency Preparedness Program, Fluor Hanford Emergency Management
- Project Engineer, Security and Emergency Services Division, U.S. Department of Energy, Richland Operations Office
- Specialist, Emergency Preparedness (2)

Results:

The document review and interviews of the corrective actions tasks associated with AdvancedMed Hanford supporting this JON were complete, effective and sustainable. AMH has conducted an assessment regarding exposure notifications. A second assessment is scheduled for August 2009. The results show consistency for mailings to be at 86% and follow ups at 55%. Expectations are that improvements will generate increased percentages. The exposure process protocols have been updated for improved notifications. Case management policy and procedure have been updated and are being maintained. The training on the seven new/modified procedures was completed and documented. The training was part of a staff meeting while the performance demonstrations included assessments and participation and verification as part of three site exercises. The process for communicating the most recent changes relies on required reading email notifications and voting button replies.

DOE provided direction to Hanford contractors to review and revise as necessary procedures ensuring that all employees involved in potential exposure events were required to report to the contractor's occupational medical services provider for evaluation as soon as possible, but no later than their next return to work. DOE then validated that all Hanford contractors put this provision in their procedures and that the procedures flowed down to subcontractors. DOE reviewed Bechtel National Inc., Advanced Technologies and Laboratories, CH2M Hill, Fluor Hanford, Washington Closure Hanford, Washington River Protection Solution, and AdvanceMed Hanford as well as a sampling, of subcontracts from each of the RL/ORP contractors for compliance with this requirement. The assessor reviewed Washington River Protection Solution, Procedure TFC-ESHQ-S_CMLI-C-02, Illness and Injury Event, Section 3.2.1.2 that required employee to report to an Onsite Medical Provider (OSMP) Health Care Center for evaluation as soon as possible but no later than the next scheduled shift under the following circumstances:

- When the employee has been instructed to do so by the Hanford Fire Department
- When instructed to do so by management
- When the employee has incurred an occupational injury not meeting self-treat criteria
- When the employee has incurred a chemical exposure
- When the employee has incurred a potential chemical exposure.

There were no issues identified and all of the procedures clearly required any employee involved in a potential exposure event to report to the contractors' OMSP for evaluation. The Federal Occupational Help Services, a division of the Department of Human and Health Services, performed an assessment to validate the effectiveness of AMH's corrective actions. The organization was scheduled to continue assessments of AMH biannually. The assessments have found AMH's corrective actions to be completed and effective.

The procedures that were revised to support corrective action implementation were reviewed to ensure that the relevant procedure contents were not altered during subsequent revisions. Confirmation was achieved that the necessary contents remain intact.

An extensive effectiveness review of corrective actions for this JON performed in March/April 2008 concluded that implementation of the corrective actions were effective in reducing the probability of recurrence and the corrective actions directly addressed the S-102 event root causes that were identified in the JON causal analysis.

Conclusions:

Procedures and processes to provide medical monitoring, documentation, and accountability of individuals with health symptoms and/or complaints following an accident have been implemented effectively. The document review and interviews have shown that the corrective actions task associated with both AdvancedMed Hanford (AMH) and the Fluor Hanford (FH) Emergency Preparedness organizations supporting this JON were complete, effective, and sustainable.

Rating:

Effective

Recommendation for Completion:

None

Suggestions for Continued Improvement:

None

Reviewers:

- Jack George, DOE-RL, Facility Representative, Program Manager
- Courtney Blanchard, DOE-ORP, Facility Representative
- Mike Flasch, WRPS, Quality Assurance Engineer
- Mike Silvia, WRPS

Corrective Action Evaluation Form
Type A WC-1

JON/Finding:
Type A WC-1,CH2M HILL management needs to define and implement an effective method for identifying Tank Farm small quantity waste leaks.

Corrective Actions Reviewed:

CHG-WC-1.1
Develop requirements, assess technology and test selected system(s) to identify small quantity waste leaks.

CHG-WC-1.2
Install enhanced system(s) to identify small quantity waste leaks.

CHG-WC-1.3
Publish an illumination/lighting standard that implements the HAZWOPER lighting requirements.

CHG-WC-1.4
Implement illumination/lighting standard developed in CHG-WC-1.3.

Documents Reviewed:

- RPP-36115, *Remote Area Radiation Monitoring Alternatives Analysis*, Rev 0
- RPP-36117, *Remote Area Radiation Monitoring Functional Design Requirements*, Rev 0
- RPP-SPEC-36575, *Waste Retrieval Remote Monitoring Camera (WRRMCAM) System Requirement Specification*, Rev 0
- RPP-36590, *Waste Retrieval Remote Monitoring Camera System – Alternatives Analysis*, Rev 0
- RPP-PLAN-36598, *Waste Retrieval Remote Monitoring Camera System – Test Plan*, Rev 0
- RPP-RPT-37586, *Remote Area Radiation Monitoring (RARM) Preliminary System Functional Test Report*, Rev 0
- RPP-SPEC-25400, *Procurement Specification for Remote Area Radiation Monitoring (RARM) System*, Rev 3
- RPP-RPT-36766, *Waste Retrieval Remote Monitoring Camera System Test Report*, Rev 0
- Lockheed Martin *Test Plan and Test Evaluation Report WRRMCAM Factory Acceptance Test – Unit #1*
- RARM-PTSD-001, *Project Turnover Scoping Document for Remote Area Radiation Monitoring (RARM) Equipment*, Rev 0
- WRRMCAM-PTSD-001, *Project Turnover Scoping Document for Waste Retrieval Monitoring Camera (WRRMCAM) System*, Rev 0
- WRRMCAM-PTD-001, *Project Turnover Document for Waste Retrieval Monitoring Camera (WRRMCAM) System*, Rev 0

- RARM-PTD-001, *Project Turnover Document for Remote Area Radiation Monitoring (RARM) Equipment*, Rev 0
- TFC-ESHQ-IH-STD-13, *Illumination*, Rev A-1
- TFC-PLN-34, *Industrial Hygiene Exposure Assessment Strategy*, Rev D-3
- Attendance Roster for TFC-PLN-34 Lighting Update Industrial Hygiene training
- *Worksite Hazard Analysis* form
- CH2M HILL Illumination Standard Powerpoint Presentation and Learning Verification
- TFC Activity Completion Rosters and ITEM Reports for TO8017, Illumination and Lighting Standard training
- Interoffice Memorandum 73D20-BJK-08-082, August 15, 2008, *2008 Lighting Surveys in 241-AN and 241-C Tank Farms*
- Interoffice Memorandum 73D20-MTH-08-066, April 7, 2008, *Lighting Survey at 241-C-109 Retrieval Operations Locations*
- *Contractor Readiness Assessment Report for the Single-Shell Tank 241-C-110 Waste Retrieval and Transfer to Double-Shell Tank 241-AN-106*, dated September 17, 2008

Activities/Operations Observed:

- Walkdown of 241-C Tank Farm RARMs and WRRMCAMs
- TFC-WO-08-1285C-110 Install/Remove Ops Cameras at Risers 3 & 6

Interviews:

- Industrial Hygiene Manager
- Safety and Health Engineer/Analyst
- Industrial Hygienists (2)
- American Electric C Farm Construction Workers
- Radiological Control Technicians
- 241-C-110 Readiness Assessment Team Members
- 222-S Facility Manager

Results:

Objective evidence reviewed verified the project had established credible functions, characteristics and constraints for both radiation monitors and remote monitoring cameras, conducted analyses for three alternatives for each, and made selections based upon analyses results. The selected alternatives were procured and tested before ten radiation monitors and five cameras were installed in and between 241-C and 241-AN Farms to support 241-C-110 tank waste retrieval operations.

The RARMs and WRRMCAMs were installed for the initial 241-C-110 tank waste retrieval operation and were considered to have worked adequately, although use for their design function was not tested during the retrieval process because an actual leak was not encountered.
An illumination standard (TFC-ESHQ-IH-STD-13) was developed, remains implemented, and is identified in the Industrial Hygiene exposure assessment strategy (TFC-PLN-34). Personnel

training on the standard was documented and an illumination evaluation was added to the Worksite Hazard Analysis form.

Illumination surveys were conducted for 241-C-110 tank waste retrieval operations and verified by the contractor Readiness Assessment. The design and functionality of the RARMs and WRRMCAMs were also verified by the contractor Readiness Assessment.

Conclusions:

Remote radiation monitoring and camera systems were procured, tested and installed to identify small quantity leaks during retrieval operations. They were utilized for initial 241-C-110 tank waste operations. Their effectiveness was not challenged during retrieval operations because there were no leaks encountered, but testing activities suggest they will be effective. An illumination standard was created, and the need to evaluate lighting conditions was instituted into the Worksite Hazard Analysis process. Further, readiness assessment criteria for retrieval validated both the leak identification equipment operability and illumination conditions.

Rating:

Effective

Recommendation for Completion:

None

Suggestions for Continued Improvement:

None

Reviewer:

Lead, Kerry Schierman, DOE-RL, Facility Representative
Joe Sondag, DOE-ORP, Facility Representative

Corrective Action Evaluation Form
Type A WC-2

JON/Finding:
Type A WC-2, CH2M HILL management needs to clarify technical safety requirements with regard to radiological measurements as indicators of waste transfer leaks.

Corrective Actions Reviewed:

CHG-WC-2.1
Establish industrial hygiene and radiological control approval designators for active transfer procedures.

CHG-WC-2.2
Revise and implement procedure TFC-ESHG-RP_ADM-P-01, *Radiological Monitoring During Waste Transfers and Waste Pump Maintenance Activities*, to clarify monitoring requirements associated with implementing TSR requirements for leak detection. Revised procedure will include guidance for developing comprehensive monitoring requirements for TSR level leak detection monitoring, and radiological control monitoring, that flow down into waste transfer monitoring technical work documents, as implemented by Action CHG-ENG-1.2.

Documents Reviewed:

- 2-2007-1746.1 Closure Package for CH2M-PER-2007-1746.1 (contained active/inactive waste transfer procedure coverage pages with radiological control and industrial hygiene approval designators)
- TFC-ESHQ-RP_ADM-P-01, REV C, C-1, C-2 and C-3, *Radiological Monitoring During Waste Transfers and Waste Pump Maintenance Activities*
- RPP-PLAN-35830, rev. 5, *Radiological Control Monitoring Plan for Tank 241-C-110 to Tank 241-AN-106 Waste Transfer*
- TO-220-113, *Over-Ground Transfer from 241-C-110 to 241-AN-106 and Sluicing of Tank 241-C-110*
- Lesson Plan for Course # 351038, *Radiological Monitoring for Waste Transfers*
- Training Course Materials for #351038 Rev. 0801.0, *Radiological Monitoring for Waste Transfers*
- Training materials for course number 356431, *HPT Radiological Monitoring for Waste Transfers – Walkdown Checklist*
- Training Materials for course number 356429, *HPT Radiological Monitoring for Waste Transfers – Classroom*
- Course completion roster for *Radiological Monitoring During Waste Transfers Course 351038*
- HNF-SD-WM-TSR-006, Rev. 6-A, *Tank Farms Technical Safety Requirements*; HNF-IP-1266, *Tank Farms Operations Administrative Controls*, section 5.11 Transfer Controls

- Task No. COO-VAR6, Rev.2, *Radiological Control Scheduled Radiation Survey Task Description*
- Radiological Survey Reports: COC 001465, COC 001467, COC 001476, COC 001477, COC 001479, COC 001480, COC 001481, COC 001487, COC 001488 and COC 001491
- TO-220-113, *Over-Ground Transfer from 241-C-110 to 241-AN-106 and Sluicing of Tank 241-C-11*

Activities/Operations Observed:

- Briefing and field walk down of the 241-C-110 to 241-AN-106 waste retrieval system for HPTs in training for C-110 retrieval operations (course number 356431, "HPT Radiological Monitoring for Waste Transfers – Walkdown Checklist.")

Interviews:

- SST Retrieval and Closure Radiological Controls Manager
- Health Physicists (2)
- Radiological Controls First Line Supervisors (3)
- Health Physics Technicians (5)

Results:

The evidence files and documentation for corrective actions CHG-WC-2.1 and CHG-WC-2.2 indicated that all actions have been adequately completed and closed out. Active waste transfer procedures indentified on the WRPS Procedures and Training web page under the *Index of Operating Procedures* (TO-XXX-XXX) contained the Radiological Controls and Industrial Hygiene approval designators. Procedure TFC-ESHG-RP_ADM-P-01, *Radiological Monitoring During Waste Transfers and Waste Pump Maintenance Activities* was revised and included clear guidance for identifying monitoring requirements associated with implementing TSR requirements for leak detection and radiological control monitoring requirements.

Training course 351038, *Radiological Monitoring for Waste Transfers* was provided to Health Physicists and Radiological Engineers responsible for preparing radiological monitoring plans. The course content was adequate and current Health Physicists and Radiological Engineers have received this training. The Health Physicists interviewed understood the requirements contained in TFC-ESHQ-RP_ADM-P-01, *Radiological Monitoring During Waste Transfers and Waste Pump Maintenance Activities.*

Technical Safety Requirements Administrative Control (AC) 5.7 "Safety Management Programs" and AC 5.11 "Waste Transfer Controls" were clearly identified in RPP-PLAN-35830, rev. 5, *Radiological Control Monitoring Plan for Tank 241-C-110 to Tank 241-AN-106 Waste Transfer.* These ACs are implemented through Radiological Control Scheduled Survey Tasks during waste transfer operations and the results are recorded on Data Sheet 2 of procedure TO-220-113, *Over-Ground Transfer from 241-C-110 to 241-AN-106 and Sluicing of Tank 241-C-110.* The Health Physicists interviewed understood the ACs, how they were implemented and where potential leak paths or misroutes could occur in the system.

Two qualified HPTs and their first line supervisor discussed the requirements of RPP-PLAN-35830, rev. 5, *Radiological Control Monitoring Plan for Tank 241-C-110 to Tank 241-AN-106 Waste Transfer* during a field walk down of the C-110 waste transfer system with newly assigned HPTs. Survey locations, anticipated dose rates and the upset condition dose rates were discussed as well as documentation requirements for compliance with AC 5.7 and AC 5.11.

Conclusions:

Industrial hygiene and radiological control approval designators for active transfer procedures have been established and procedure TFC-ESHG-RP_ADM-P-01, *Radiological Monitoring During Waste Transfers and Waste Pump Maintenance Activities* is effectively implemented. The training provided to Health Physicists and Radiological Engineers was adequate to ensure that the TSR controls for leak detection monitoring and other radiological control monitoring requirements are implemented in radiological monitoring plans for waste transfers. Technical Safety Requirements AC 5.7 and AC 5.11 controls were identified in RPP-PLAN-35830, rev. 5, *Radiological Control Monitoring Plan for Tank 241-C-110 to Tank 241-AN-106 Waste Transfer* and the Health Physicists and HPTs are knowledgeable of the monitoring requirements.

Rating:

Effective

Recommendation for Completion:

None

Suggestions for Continued Improvement:

None

Reviewer:

Joe Sondag, DOE-ORP, Facility Representative

Corrective Action Evaluation Form
Type A WC-3

JON/Finding:
Type A WC-3, CH2M HILL management needs to address radiological conduct of operations deficiencies that were evident during the S-102 response to abnormal operating conditions.

Corrective Actions Reviewed:

CHG-WC-3.1
Combine Abnormal Operating Procedures (AOP) with similar initial actions including TF-AOP-006 and -011, utilizing an Enhanced Work Planning approach, including representatives from operations, as well as Industrial Hygiene, Radiological Control, and Emergency Preparedness.

CHG-WC-3.2
Review all Abnormal Operating Procedures utilizing an Enhanced Work Planning approach including representatives from operations as well as industrial hygiene, radiological control, and emergency preparedness. Implement revisions with focus on effective flow between Alarm Response Procedures, AOPs and Emergency Response Procedures.

CHG-WC-3.3
Implement a process for safe AOP response such that planning time is minimized for event response and stabilization.

CHG-WC-3.4
Complete review of abnormal operating procedure changes utilizing table top drill format with all tank farm shifts.

Documents Reviewed:

- Course Completion Rosters and ITEM records for Abnormal Operating Procedure table top drills
- Closure Operations Standing Order CO-07-007, *Industrial Hygiene Sampling When Implementing TF-AOP-006, TF-AOP-011, and TF-AOP-015*
- Waste Feed Operations Standing Order WFO-07-005, *Industrial Hygiene Sampling When Implementing TF-AOP-006, TF-AOP-011, and TF-AOP-015*
- TF-AOP-003, *Response to Elevated Airborne Radioactivity*, Rev B-8
- TF-AOP-004, *Response to Seismic Event*, Rev C-2
- TF-AOP-005, *Response to Unexpected Tank Temperature, Level or Flammable Gas Increase*, Rev B-7 and C-0
- TF-AOP-006, *Response to High Radiation*, Rev C-4 and C-5
- TF-AOP-011, *Response to Radiological/Hazardous Material Leaks, Spills and/or Personnel Contamination*, Rev B-8, B-9, B-10, and C-2
- TF-AOP-015, *Response to Reported Odors or Unexpected Changes to Vapor Conditions*, Rev B-14 and C-0
- TF-AOP-018, *Response to Electrical, Water, Air or Pressurized Gas Cylinders High Energy Releases*, Rev B-1 and C-0

- TF-AOP-020, *Response for Placing Personnel and Equipment in a Safe Condition*, Rev C-0
- TF-AOP-021, *Response to Tank Farm Ventilation Upset*, Rev A-1
- TFC-OPS-MAINT-CO-1, *Tank Farm Contractor Work Control*, Rev N-3 and N-9
- TFC-OPS-OPER-STD-01, *Technical Procedure Format and Preparation Standard*, Rev A-4
- TFC-OPS-OPER-C-13, *Technical Procedure Control and Use*, Rev F-13
- Immediate Recovery Work Briefing, Feb 20-27, 2008, and Course Completion Rosters
- 41 Problem Evaluation Reports (PER) and resolutions from a search of "AOP" for 2008 and 2009
- DOE-ORP Letter, 09-ESQ-082, "Washington River Protection Solutions LLC (WRPS) Response to Abnormal Events Surveillance S-09-ESQ-TANKFARM-003," dated March 11, 2009
- WRPS Letter, WRPS-0900518 R2, "Washington River Protection Solutions LLC Response to Abnormal Events Surveillance S-09-ESQ-TANKFARM-003, 'Washington River Protection Solutions LLC Root and Common Cause Analysis Results'"

Activities/Operations Observed:

- Table-top Drill – Tank Waste Leak in C Farm

Interviews:

- Base Operations ESH&Q Manager
- Base Operations, Operations Manager
- DOE-ORP Facility Representatives
- DOE-OPR Tank Operations Division Director
- ESH&Q Manager
- ESH&Q Deputy Manager
- Emergency Preparedness Specialists
- Industrial Hygiene Manager
- Procedures Manager
- Procedures Records Management Specialist
- Quality Assurance Engineer
- Radiological Controls Supervisor
- Shift Operations Manager
- Technical Writer/Editor (3)

Results:

Objective evidence files indicated all Abnormal Operating Procedures (AOP) were reviewed and changes were made to TF-AOPs 005, 011, 015 and 018. TF-AOP-006 was initially changed, but ultimately its actions were incorporated into TF-AOP-011 and then TF-AOP-006 was cancelled. The assessor reviewed the changes, verifying content of the changes addressed shortcomings identified in the S-102 event. An enhanced work planning approach for the change process was verified by review of concurrence organizations identified on the changes and discussions with personnel. Other AOPs (003 and 004) that were not changed, but addressed similar types of events, were also reviewed by the assessor and determined to contain adequate flow between response procedures. Records of AOP validations via table-top drill activities were evident.

Revisions to AOPs were still in progress. TF-AOP-003 had a periodic review change pending, and was currently more than two months past due (February 6, 2009) for the change. A justification for continued use was approved on February 13, 2009. Also, the corrective action specified for PER 2008-1788 of September 10, 2008, stated AOPs are currently being reviewed against changes recently completed on Alarm Response Procedures, to identify and corrective any inconsistencies between the two. Completion of the action is due on April 30, 2009.

The AOP change process itself was reviewed to verify an enhanced work process continued to be used for subsequent technical changes to AOPs and to ensure S-102 corrective actions remained identifiable in history files. A Suggestion for Continued Improvement in this area was identified (see below) for consistency in concurrence designations. Specifically, a consistent enhanced work planning/document concurrence approach should be implemented for technical changes to Abnormal Operating Procedures. The corrective actions (CHG-WC-3.1/3.2) designated for the S-102 event specified that Operations, Emergency Preparedness (TFC-OPS-OPER-C-13, Attachment A designator "EP"), Industrial Hygiene (designator "S") and Radiological Control (designator "R"), as a minimum, should be included in the AOP change process. Review of the AOP technical changes made as a result of the S-102 event identified an inconsistent approach to designation and participation of enhanced work planning participants was implemented:

- TF-AOP-005, Rev B-7, contained only an "R" review designator, although the IH Program Manager and Emergency Management/Safeguards and Security Lead also signed the change for concurrence.
- Initial revisions (C-4 and C-5) to TF-AOP-006 before it was combined with TF-AOP-011 and cancelled, contained "E" (Rev C-4, only), "R," and "S," but in each case the Emergency Management/Safeguards and Security Lead also signed the changes for concurrence.
- TF-AOP-011, Rev B-11, contained only an "R" review designator, although the Emergency Management/Safeguards and Security Lead also signed the change for concurrence. The Safety Engineer signature was marked "N/A." Note: Revision C-0 was designated "E," "R," and "S," but was also signed by a delegate for the Emergency Preparedness Lead.
- Approval designators were not available for TF-AOP-015 (Rev B-14) and TF-AOP-018 (B-1) S-102 driven revisions, but in each case a Safety Engineer, Radiological Engineer and Emergency Management/Safeguards and Security Lead concurrence signature was evident.

The "Immediate Recovery Work" process was reviewed and discussed with personnel that would be involved in its implementation. As a result of the S-102 event, the TF-OPS-MAINT-C-01 "Emergency Recovery Work" process was renamed the "Immediate Recovery Work" process with the intent that it be used for events similar in nature to the S-102 event. Appropriately, the process has been infrequently used (personnel interviewed identified no known implementations). Perhaps because of this, personnel knowledge of the process and its application appeared limited, despite evidence of an awareness briefing having been provided to appropriate personnel in February 2008. Some personnel specified to be involved with the implementation process did not appear to be familiar with the process or their roles in it when questioned, and some demonstrated confusion as to who (by name) was being referred to as the actionee when the procedure specified the "Base Operations Manager" and/or the "ESH&Q Manager." Despite training on the process in 2008, it was evident that a number of personnel were either unfamiliar with the process or unclear on who was being designated to perform actions in the procedure (see Suggestion for Continued Improvement, below).

No entries into AOPs were observed by the review team. Therefore, effectiveness was reviewed via personnel interviews and reviews of recent PER information. The information reviewed identified issues with AOP entry and compliance:

- WRPS-PER-2009-0178 (January 27, 2009) identified an issue where TF-AOP-021 was not adequately followed;
- WRPS-PER-2009-0385 (March 11, 2009) identified a Concern and six Findings from a DOE-ORP surveillance in the area of response to abnormal events; and
- WRPS-PER-2009-0584 (April 7, 2009) identified a DOE-ORP FR Finding on failing to enter AOPs in a timely manner.

On April 14, 2009, the actions of TF-AOP-021 were not completed in their entirety when a radio announcement of the event was not made. No PER entry was made on the specifics of the non-compliance, but a PER (WRPS-PER-2009-0662) was entered identifying that TMACS was initially unaware of the shutdown.

In addition, several other procedure compliance issues have been identified in 2009:

- WRPS-PER-2009-0269 identified an instance where a step requiring engineering approval was missed in a work instruction;
- WRPS-PER-2009-0439 identified an issue where a continuous use procedure was not present when conducting the actions of the procedure; and
- WRPS-PER-2009-0471 identified where a DOE-ORP FR twice observed a procedure not being adequately followed.

The assessor noted that more than half of the recent AOP and other procedure non-compliance issues entered into the PER database were identified by oversight personnel external to the contractor's organization. TFC-ESHQ-Q_C-C-01, *Problem Evaluation Request*, Rev E, states, "A PER shall be initiated for conditions that require resolution, trending, cause determination, or identification and tracking of corrective actions." Since the assessors identified Senior Supervisory Watches and other supervisors and managers in the field during work activities, the assessors must assume that either these contractor oversight personnel are not recognizing procedure compliance issues that are occurring, or don't recognize the value of documenting such observations for causal determination, trending, and/or resolution. This issue was most prevalent in the case of WRPS-PER-2009-0662, discussed above, where a missed AOP step was identified by a DNFSB Site Representative. Rather than the contractor entering the item as a procedure non-compliance in PERs, the issue was entered by a TMACS Operator as an observation that TMACS was not being kept informed of alarms. As such, the significance level was designated as "PIE/CIM" ("a suggestion or industry report identifying process improvements, program enhancement, continued quality improvements, or recommendations, or used for evaluation of external lessons learned" – TFC-ESHQ-Q_C-C-01, Table 2) rather than more appropriately, a "PER with Resolution" ("An adverse condition which includes problems, such as failure to comply with the documented safety analysis, technical specifications, DOE orders, regulations, contract requirements, or administrative controls, procedures, instructions, noncompliances that adversely affect tank farm facility system hardware/software operability, reliability, or performance" - TFC-ESHQ-Q_C-C-01, Table 2). The assessor suggests the Tank Operations Contractor should ensure personnel are able to recognize procedure non-compliances and document their identification for causal determination, trending, and/or resolution.

Operations management acknowledged awareness of weaknesses in procedure compliance in general and AOPs specifically. A root and common cause analysis (WRPS Response to Abnormal Events Surveillance S-09-ESQ-TANKFARM-003) for the issues identified in WRPS-PER-2009-0385 above, and DOE-ORP Letter 09-ESQ-082, dated March 11, 2009, established three judgments of need in this area:

- Reestablish a culture committed to procedural compliance, conservative decision making, and questioning attitude;
- Perform procedure reviews for consistency and perform field observations to ensure procedure compliance and effective communications; and
- Strengthen training and qualification requirements relied upon to implement expectations.

The assessor suggests that procedure non-compliance events that have been identified since the root cause analysis has been performed should also be considered when implementing the corrective actions identified in the report (as approved/accepted by DOE-ORP).

The assessor attended the project's "CONOPS Council" meeting. Development of a conduct of operations improvement plan was discussed. The chairman of the council stated the three areas of greatest concern were procedure compliance, communication, and command and control.

Conclusions: AOP revisions to address S-102 lessons learned have been completed and validated via the table-top drill process. Personnel continue to identify issues with AOP content, but management appears to address the issues via accepted processes, and was currently ensuring AOP consistency with Alarm Response Procedures. Consistency in the approach to selection of which organizations participate in AOP concurrence is suggested. Improvement in personnel awareness and knowledge of the "Immediate Recovery Work" process also appears warranted. Finally, procedure compliance in general, and AOP compliance in particular, remain a challenge for the organization. A root cause analysis was recently completed in this area and a conduct of operations improvement plan is in development. Approval and implementation of each should improve performance in this area. Corrective actions of this JON have been completed. However, the corrective actions have not proven entirely effective in preventing recurrence of procedure compliance issues.

Rating:

Partially Effective

Recommendation for Completion:

R-WC-3-1

WRPS should complete the corrective actions to improve Conduct of Operations and response to abnormal events identified by WRPS letter to DOE-ORP, "Washington River Protection Solutions LLC Response to Abnormal Events Surveillance S-09-ESQ-TANKFARM-003, 'Washington River Protection Solutions LLC Root and Common Cause Analysis Results,'" dated April 8, 2009, by the dates specified in the enclosure, and conduct an effectiveness review by the end of fiscal year 2009.

Suggestions for Continued Improvement:

S-WC-3-1
A consistent enhanced work planning/document concurrence approach should be implemented for technical changes to Abnormal Operating Procedures.

S-WC-3-2
The TOC should conduct periodic awareness/proficiency training on the "Immediate Recovery Work" process for those personnel involved in the process.

S-WC-3-3
Procedure non-compliance events identified since the issue of WRPS letter to DOE-ORP, "Washington River Protection Solutions LLC Response to Abnormal Events Surveillance S-09-ESQ-TANKFARM-003, 'Washington River Protection Solutions LLC Root and Common Cause Analysis Results,'" dated April 8, 2009, should be considered when implementing the corrective actions identified in the report.

S-WC-3-4
The Tank Operations Contractor should improve the self-identification and reporting (i.e. per the PER process) of procedure non-compliances to facilitate causal determination, trending, and/or resolution.

Reviewer:

Lead, Kerry Schierman, DOE-RL, Facility Representative
Courtney Blanchard, DOE-ORP, Facility Representative
Joe Sondag, DOE-ORP, Facility Representative
Ron Ciola, DOE-ORP, Facility Representative

Corrective Action Evaluation Form
Type A: WC 4

JON/Finding:
Type A: WC 4, CH2M Hill workers, supervisors, and management need to improve the implementation of the Conduct of Operations Programs as required in the Safety Basis and Conduct of Operations Applicability Matrix, March 20, 2007.

Corrective Actions Reviewed:

CHG-WC-4.1
Conduct field level conduct of operations briefings with all field personnel in WFO, Closure, and ATS

CHG-WC-4.2
Perform a training needs analysis to identify and incorporate conduct of operations/formality of operations lessons learned and operating experiences

CHG-WC-4.3
Develop a training class based on the Training Needs Analysis.

CHG-WC-4.4
Deliver training class to target audience identified in training analysis.

CHG-WC-4.5
Develop and provide briefing to field work supervisors on discrepancies associated with worksite hazard analysis requirements not met per TFC-OPS-MAINT-C-01, Tank Farm Contractor Work Control, prior to the July 27, 2007 waste leak.

CHG-WC-4.6
Modify TFC-OPS-OPER-C-17, Operating Logbooks, to require that an intermittent logbook be maintained for retrieval operations.

CHG-WC-4.7
Revise work control procedure on performing minor maintenance work to clarify when this work control process can be utilized.

Documents Reviewed:

- Final Report FY2008-CH2M-1-0003; CH2M HILL Hanford Group, Inc. Independent Assessment of Corrective Action Plan Implementation for Tank 241-S-102 Waste Spill Investigation and Analysis Reports Midpoint Assessment, February 11 - February 29, 2008
- Safety Basis and Conduct of Operations Applicability Matrix, March 20, 2007
- TFC-OPS-MAINT-C-01; *Tank Farm Contractor Work Control*
- TFC-ESHQ-S_SAF-C-02, *Job Hazards Analysis*

- TFC-OPS-OPER-C-17, *Operating Logbooks*
- TFC-OPS-OPER-C-12, rev. A-7, *Observation and Evaluation of Field Work Supervisor Candidates*
- TFC-ESHQ-IH-STD- 13, rev. A, *Worksite Hazard Analysis*
- Presentations developed to support work control process change personnel briefing requirements
- Presentation provided to Senior Management on the difference between standard and complex work packages
- Various Completed Work Packages
- Various Minor Work Packages
- Base Operations Planning Template
- OA Database Entry 3310

Activities/Operations Observed:

- Base Ops Double Shell Tanks Plan of the Day Meeting
- Base Ops Single Shell Tank Plan of the Day Meeting
- Contractor Morning Status Meeting
- Contractor Daily Release Sheet Meeting
- TFC-09-0439; Install new Drain Seal Assemblies in AZ-101/102A Pit
- WFO-WO-05-002807; Replace Chiller AZ-CW-R-1
- TFC-09-1566-242A HVAC; HMI Loss of Power Alarm Troubleshooting Package
- CLO-07-0729; Remove Jumpers from C-104 pit
- WFO-07-3186; 241-AN Repair Lighting and Replace Disconnects
- TFC-09-1519; 242-A, Dynamic Test Raw Water Pressure Control Valves
- Table Top Drill of Retrieval Operations Emergency Procedures
- CONOPS Improvement Council
- CONOPS Sensitivity Training

Interviews:

- Shift Managers
- Field Work Supervisors
- DST Planning Manager
- SST Planning Manager
- 242-A Facility Manager
- Work Planning Manager Double Shell Tanks
- Work Planning Manager Single Shell Tanks

Results:

Conduct of Operations

The assessors reviewed work in the field as a primary method of determining compliance and knowledge of conduct of operations requirements. There were no deficiencies noted. The assessor focused on several areas, including shift routines and operating practices, training, and procedural compliance.

The assessor noted that Standing Order 07-008, *C-110 Retrieval Operations*, has been in effect since November 2008, and did not have a planned end date. The Standing Order also did not include any wording to indicate when or how it will be cancelled. An earlier version of the Standing Order contained words to this effect -- "this Standing Order will remain in force until a formal organizational change is implemented and the new organizational structure and necessary procedure changes are reviewed by the Chief Operating Officer and determined to satisfy the issue identified in CH2M-PER-2007-1821." Discussions with the interviewees indicated the current Standing Order will remain in effect through the C-110 retrieval period, after which it will be cancelled.

The assessors also attended a "CONOPs Council" meeting. The council was recently created, and meets on a monthly basis. It consists of both management and bargaining unit personnel, however, bargaining unit attendees were not among those at this meeting. TOC management took action to gain bargaining unit attendance at the next meeting. The council addressed multiple conduct of operations issues. During this meeting, they discussed oversight - particularly the management oversight. It was stated at the meeting that the process that directs management oversight requires twelve different forms that could be filled out to document oversight. The associated complexity has potentially impeded managers from going into the field in the past. One attendee created a single form on one sheet of paper, which should promote field time. A conduct of operations improvement plan is being developed by the Operations Shift Manager. According to the Operations Shift Manger, the plan focuses on recent areas of weakness, including procedure compliance, communications, and command and control. The assessor noted that the people in attendance at the CONOPs Council were energetic and proactive. There were many ideas brought to the table, including areas of improvement and potential new team members. Attendees included the Project Operations Manager and Radiological Controls Management.

Assessors attended CONOPs Sensitivity Training. This was not the result of a corrective action, but was conducted proactively by the C-Tank Retrieval and Closure Manager. The discussions centered on procedure compliance and avenues of communication during the retrieval processes. The Radcon Supervisor and Industrial Health Supervisor discussed events and lessons learned from the last retrieval operations and changes for the upcoming retrieval activity. The meeting appeared beneficial.

A review of the Tank Operations Division Operational Awareness database entries showed that conduct of operations briefings on procedural compliance were given to each shift of operators by the Shift Managers.

The overall performance of conduct of operations in the field was adequate. The ongoing efforts of the contractor to improve conduct of operations – the CONOPs Council, Sensitivity Training, CONOPs Improvement Plans – all show the desire of the Tank Operations Contractor to continually improve and increase their performance in this area.

The assessor discussed the intermittent retrieval logbook with the Operating Engineer. The logbook tracks the activities associated with the retrieval operations and is maintained by the

Operating Engineer. The logbook allows a clear, written record of retrieval operations separate from other operations at Tank Farms. The Operating Engineer considered the logbook an effective method of recording this information.

General Work Control

During the S-102 event, work was performed using a troubleshooting document, and the Field Work Supervisor invoked a General Hazard Analysis that did not cover the hazards for the work. It was also determined that the scope of work was not appropriate for electrical work activities. Further, the work was performed using a minor work order which was not released properly. Minor work orders require that the scope of the work be identified in the Work Record of the minor work package prior to release – this was also not completed.

The assessment team reviewed objective evidence presented on ESTARS/IDMS, including briefing packages, which described the problems outlined above, which occurred during the S-102 event, and the improvements made in the hazard analysis process since the event. The slides showed evidence of training on discrepancies vs. expectations and weaknesses. The deliverables also included training rosters by student and instructors, and lists of qualified Field Work Supervisors. The assessor also reviewed a DOE validation review conducted in April 2007, which determined that some training rosters were missing information, including instructor signatures and dates. OA database entry 3310 verifies that the training rosters were corrected after the DOE Facility Representative contacted the contractor with the discrepancy.

The assessment team found that some training packages went above and beyond the requirements for a briefing in that they contained evidence of a knowledge check (written exam) given to the students following the training, and evidence that the training was attended by Operating Engineers as well as the Field Work Supervisors.

TFC-OPS-MAINT-C-01, *Tank Operations Contractor Work Control*, procedure contains many uses of the word "ensure," and in some instances the use of the word is inappropriate as it is a vague, ambiguous action word. The Hanford Site River Protection (CH2M HILL Hanford Group, Inc.) EM-62 Assessment Report, March 2008, cites this deficiency, "WP.2-O-2 The action word 'ensure' was noted to be either misused or over used…" The final deficiency noted in the work control procedure was found in Step 7 of Section 4.4.1.3, minor work orders. It was vague in directing the Field Work Supervisor/worker to "Follow applicable sections" of the procedure.

Telephone Approval for Work Release

The assessment team interviewed the training coordinator for the Field Work Supervisors, Operating Engineers, and Shift Managers. An interview with training personnel and review of documentation concluded that procedure TFC-OPS-OPER-C-12, *Observation and Evaluation of Field Work Supervisor Candidates* – has requirements for evaluating FWS's in the areas of work instructions, hazards identification, work documentation, correcting or modifying work documentation, and Job Hazard Analysis. Interviews with Field Work Supervisors, Shift Managers and Operating Engineers concluded there is a strong general knowledge in these areas.

However, there were differing opinions on whether work release via telephone (telcon) approval was acceptable.

The discrepancy regarding whether telcon approval of work release also differed amongst the two work planning managers, one believed it was not acceptable, while one claimed it was acceptable. The assessors also reviewed minor work procedure TFC-WO-09-0008, which specifically allows telcon SM concurrence for work release in the verbiage of the document.

Some of the interviewees were of the opinion that telcon work release should not be allowed since the verbal information can be recorded differently and the message lost. The Shift Manger on watch and Ops Shift Manager thought that telcon work release was allowed. Note that the S-102 event involved a telcon concurrence for work release.

The assessor suggests a clarification of the telcon practice, whether and when it is allowable, and what signature requirements apply if it is. Currently, there is no direction on the practice of telcon work release in the TFC-OPS-MAINT-C-01; *Tank Operations Contractor Work Control Procedure,* although the assessors reviewed minor work orders that specifically call out telcon work release as an option.

Minor Work and Hazard Assessment

As a result of the S-102 corrective action process, TFC-OPS-MAINT-C-01; *Tank Operations Contractor Work Control Procedure,* was changed to better outline the differences between minor work and non-minor work. Minor work can be performed to standing work orders or minor work orders. A streamlined hazard evaluation is performed for minor work. If not deemed minor work, the activity falls within the "standard work process." The standard work package preparation and approval process requires more rigor than that of minor work.

The different levels of hazard analysis are outlined in TFC-ESHQ-S_SAF-C-02, *Job Hazards Analysis.* Some minor work such as routine work can be performed to a General Hazard Analysis while other minor work, such as non-routine minor work must utilize a Worksite Hazard Analysis. Standard work must be performed to a job hazard analysis checklist, and complex work requires the highest tier of hazard control -- a Safety Plan. The S-102 corrective action plan Type A finding CHG-WC-4.4 required training be conducted to delineate the differences between the hazard reviews for minor work and standard work. Deliverables show objective evidence of training materials and a roster of completion. Interview with the Operations Shift Manager concluded that the training has been incorporated into the qualification process for the Shift Supervisors, Shift Managers, and Operating Engineers.

The assessors reviewed TFC-OPS-MAINT-C-01, *Tank Operations Contractor Work Control Procedure*, and attended the Plan of the Day Meetings to better understand the effectiveness of work control. Work order release is discussed in Section 4.6 of procedure TFC-OPS-MAINT-C-01. It requires that the contractor "develop a daily schedule/release sheet that reflects the work to be performed." This process is coordinated by the Work Maintenance & Integration group. A Daily release sheet contains a list of work items released for work that day. It is derived from a master schedule that is updated as work packages are completed, authorized and prioritized.

Minor work is identified on the Daily Release Sheet as well as non-minor work. Minor Work determination is made by the Field Work Supervisor or the Radcon First Line Supervisor. All minor work is initiated at the Shift Manager's Office by entering the scope of the work into the work record for the package. The Shift Manager reviews the scope of work to determine if it is appropriate. Work Records for Minor Work have a list of standard questions that make it easier to review for work release. The questions guide the Shift Manager, for instance, "work hazard analysis used?", "liquid encountered?", "posted radiological area?". This has been found to be very effective. Finally, if the work is on the Daily Release sheet, the Shift Manager approves it for work. Of note, since S-102 all work is released through one shift office, located at the 200 East Area.

The assessors attended Plan of the Day meetings. The Daily Release Sheet from the current day and following day was reviewed by line item. The status of each job was discussed and complete jobs removed from the list. The Daily Release Sheet for the following day was then compiled.

The assessors interviewed members of the Work Planning and Integration group. The difference between minor work and non-minor work was discussed. The interviewees were consistent in their knowledge, which was detailed. The Scheduler was intimately aware of the process for compiling and approving of work on the Daily Release Sheet. Supervisory personnel in the Work Planning and Integration Group understood the details of the process of approving minor work and the differences between minor and non-minor work. Supervisory personnel also were very familiar with TFC-OPS-MAINT-C-01, *Tank Operations Contractor Work Control Procedure.*

During a pre-job briefing the assessor noted that a worker asked what hazards were present in the farm from other, adjacent jobs. The question was also extended to include adjacent farms, which shows an awareness of hazard analysis for collocated work. Tank Operations Division Facility Representatives recently identified an issue where collocated work presented hazards to an adjacent work crew. The issue resulted in a lessons learned issued to the workforce, and this question during the prejob brief demonstrated the effectiveness of this corrective action and in-depth level of hazard awareness by the workforce.

Troubleshooting

The East Ops Planning Manager, Operations Organization Manager, Operations Shift Manger, and Shift Manager were interviewed. When asked about work control changes since the S-102 event, most were able to point to several Troubleshooting Documents that have been worked recently. The assessor did verify one troubleshooting procedure was correctly implemented and controlled in the field. The planning manager cited AN Farm grounding work as another example of troubleshooting that has been done in accordance with the requirements.

The assessors observed a job where the job had to be stopped due to an inadequate Troubleshooting Plan. The HMI loss of power alarm package failed to be effective in the first step. The FWS commented that there should have been a walk down performed before the Troubleshooting Plan was prepared. The plan was not consistent with the equipment alignment in the field. The assessors also observed a job where the Troubleshooting Plan was workable,

and was prepared in accordance with the requirements. The work replacing the AZ chiller unit proceeded after a Troubleshooting Plan was prepared and worked. It should be noted that the Troubleshooting Plan work was followed by a successful foray into a minor standing work document for Instrumentation Troubleshooting and Repair. This work was accomplished with minor delay.

Of interest, medium risk work packages were required to go through Joint Review Group (JRG) review after S-102. Since then, this requirement has been relaxed to allow the work planning manager to decide if it required JRG review. Some medium risk work has been repetitively performed, and crews are familiar and experienced with them.

One issue the assessors noted is that TFC-OPS-MAINT-C-01, *Tank Operations Contractor Work Control Procedure*, does not define troubleshooting. Definitions for other terms such as routine maintenance are referenced to TFC-ENG-SB-C-03, *Unreviewed Safety Question Process*. Referencing the other procedure complicates the work control process.

Other Improvements since S-102

Since S-102, a Work Instruction Planning Template has been developed that contains standard wording to use for each job, as it applies to the specific work. For instance, if the job requires radcon stop points, this template has the standard wording for that activity. This is very effective at familiarizing the workforce with the requirements that apply to repetitive work practices, and makes the requirements easily recognizable by the Field Work Supervisor.

Immediate Recovery Work

One problem the assessors noted during the review is that Section 4.3 of TFC-OPS-MAINT-C-01, *Tank Farms Contractor Work Control Procedure*, is titled "Immediate Recovery Work." This procedure directs the reader to TFC-ESHQ-RP_RWP-C-04, *Radiological Work Permits*, for details on when this work can be done without a Radiological Work Permit (RWP). However, the RWP procedure cites this work as "Emergency" vice "Recovery" work. The procedures need to be better coordinated.

Also, Section 4.3 of TFC-OPS-MAINT-C-01, *Tank Farms Contractor Work Control*, does not address industrial hygiene controls for Immediate Recovery Work. These controls should be incorporated into the discussion alongside other relevant controls.

Conclusions:

Conduct of Operations:

The overall performance of conduct of operations in the field was adequate. The ongoing efforts of the contractor to improve conduct of operations – the CONOPs Council, Sensitivity Training, CONOPs Improvement Plan – all show the desire of the Tank Operations Contractor to continually improve and increase their performance in this area.

Work Controls:
Work controls are adequate, but work control procedures require review and modification in certain areas. The workforce knowledge of work controls also requires improvement. This review also evaluated the effectiveness of corrective actions for EM-60 Review Report Item 9.

Rating:

Effective

Recommendation for Completion:

None

Suggestions for Continued Improvement:

S-WC-4-1
The TOC should determine if and when telephone approval is acceptable for the release of minor work, and proceduralize the requirements if it is deemed allowable.

S-WC-4-2
The TOC should determine the appropriate level of radiological controls for "Immediate Recovery Work" as discussed in TFC-OPS-MAINT-C-01, *Tank Operations Contractor Work Control*; these controls must mesh with Section 4.10 of TFC-ESHQ-RP_RWP-C-04, *Radiological Work Permits* (i.e. consistent terminology—"immediate recovery" vs "emergency").

S-WC-4-3
The TOC should include a requirement to consider the need to develop industrial hygiene and safety controls in Section 4.3 of TFC-OPS-MAINT-C-01, *Tank Operations Contractor Work Control*, when preparing for "Immediate Recovery Work."

S-WC-4-4
The TOC should include definitions for "troubleshooting" and "routine work" in the work control procedure, TFC-OPS-MAINT-C-01, *Tank Operations Contractor Work Control.*

S-WC-4-5
The TOC should revise Attachment B of TFC-OPS-MAINT-C-01, *Tank Operations Contractor Work Control*, to limit use of the word "ensure" when developing work documents; "ensure" is an ambiguous action word.

S-WC-4-6
The TOC should revise TFC-OPS-MAINT-C-01, *Tank Operations Contractor Work Control*, Section 4.4.1.3, Step 7, to remove ambiguity; the step currently directs the Field Work Supervisor/worker to "Follow applicable sections" of the procedure.

S-WC-4-7
WRPS should develop and conduct work control process training with shift managers and field work supervisors.

Reviewer:

Lead, Ron Ciola, DOE-ORP, Facility Representative
Joe Sondag, DOE-RL, Facility Representative
Kerry Schierman, DOE-RL, Facility Representative

Corrective Action Evaluation Form

Type A JON MS-1

JON/Finding:

Type A JON MS-1 - ORP and CH2M HILL need to review and evaluate the adequacy and implementation of corrective action plans for past events and enforcement actions to the S Tank Farms, and ensure that effective lessons learned processes are performed.

Corrective Actions Reviewed:

All of the following Corrective Actions and associated Objective Evidence files were reviewed:

CHG-MS-1.1
Conduct an independent review to determine the effectiveness of causal analyses and corrective actions taken in response to significant events since January 1, 2003.

CHG-MS-1.2
Develop and implement an assessment plan to periodically evaluate the continued efficacy of the lessons learned program and corrective actions taken in response to significant events.

DOE-MS-1.3
Conduct an evaluation of the contractor's independent review of significant events since January 1, 2003, to ensure the review was properly scoped, at an appropriate depth, adequately captured identified issues, and corrective actions were adequate as a result of the review.

DOE-MS-1.4
The ORP Manager will establish requirements for completion of Type A corrective actions for inclusion in the readiness review plan of action prior to the restart of single shell tank retrieval operations at either S-102 or C-Farm.

Documents Reviewed:

- Type A Accident Investigation Report, The July 27, 2007 Tank 241-S-102 Waste Spill at the Hanford Tank Farms
- Corrective Action Plan for Type A Accident Investigation Report
- FY2008-CH2M-1-0003, CH2M HILL Hanford Group, Inc. Independent Assessment of Corrective Action Plan Implementation for Tank 241-S-102 Waste Spill Investigation and Analysis Reports Midpoint Assessment
- FY2008-CH2M-I-0007, Corrective Action Plan Implementation for Tank 241-S-102 Waste Spill End Point Assessment
- CH2M-PER-2007-1749, Problem Evaluation Request
- CH2M-PER-2007-1749; RES; Ensure effective lessons learned processes are performed
- CH2M-PER-2007-1749.2
- 5-SigPER CAP Strategy, Effectiveness Evaluations of Significant Event Corrective Actions
- TFC-PLN-10, Revision C-3
- TFC-PLN-10, Revision C-4
- TFC-PLN-10, Revision E

- FY2008 CH2MHILL Integrated Assessment Schedule, Rev 13
- FY2009 WRPS Integrated Assessment Schedule, Rev 6
- 7-MS-1, Change Analysis
- 3-RPP-RPT-35553 r1, Causal Analysis and Corrective Action Evaluation Report
- 7-TF-018, Office of River Protection Investigation of ORP Actions related to the Tank S-102 Waste Spill
- Human Performance Improvement Review of the DOE Response to Tank S-102 Tank Waste Spill
- Assessment of ORP TF Oversight, (Gibbs Report)
- Contract No. DE-AC27-99RL14047 - C-109 Readiness Assessment Expectations
- Contract No. DE-AC27-99RL14047 –Request Review and Approval of POA-C109-01, "Single-Shell Tank 241-C-109 Waste Retrieval Resumption and Deployment of Foldtrack® Mobile Retrieval Tool", Revision 0
- Contract No. DE-AC27-99RL14047 –Approval of POA-C109-01, "Single-Shell Tank 241-C-109 Waste Retrieval Resumption and Deployment of Foldtrack® Mobile Retrieval Tool", Revision 1
- Event Investigation Reports:
  - EIR-2008-021
  - EIR-2008-024
  - EIR-2008-025
  - EIR-2009-005
- Occurrence Reporting System Reports:
  - EM-RP--WRPS-TANKFARM-2008-0001
  - EM-RP--WRPS-TANKFARM-2008-0002
  - EM-RP--WRPS-TANKFARM-2008-0003
  - EM-RP--WRPS-TANKFARM-2009-0001
  - EM-RP--WRPS-TANKFARM-2009-0002
  - EM-RP--WRPS-TANKFARM-2009-0003
  - EM-RP--WRPS-TANKFARM-2009-0004
  - EM-RP--WRPS-TANKFARM-2009-0005

Activities/Operations Observed:

None

Interviews:

- WRPS - Base Operations, Operations Manager
- WRPS - Base Operations Engineering Manager, Acting
- WRPS - Operations Specialist/Occurrence Reporting Specialist
- WRPS - Performance Assurance/Corrective Action, Manager
- WRPS - Performance Assurance/Corrective Action, Quality Assurance Engineer
- DOE-ORP - Tank Farm Operations, Director
- DOE-ORP – ESQ, Assistant Manager
- DOE-ORP – Verification and Confirmation Division, Program Manager

Results:

The independent review conducted by the contractor in MS-1.1 to determine the effectiveness of causal analyses and corrective actions taken in response to significant events since January 1, 2003 identified that weaknesses existed in the causal analyses, corrective actions were narrowly scoped, and that there was a heavy reliance on endpoint assessments to evaluate the effectiveness of corrective actions. The Occurrence Reporting database was queried for reports filed since contract transition to WRPS. Of the eight reports filed, four were significance category 4 occurrences, which did not require any type of causal analyses or corrective actions. None of the other four reports requiring causal analysis and corrective actions were submitted as final within 45 days of categorization. One report, categorized on 10/9/08, was still not submitted as final as of 4/21/09. In events where human performance errors were identified, none of the cause codes had couplets identified. In one case, human performance was the single cause code identified, yet there were many unanswered questions based on the unavailability of records listed in the event investigation report. Delays in executing both the PISA and USQ process, in addition to completion of causal analyses appeared to be major contributors to the delays in submitting final occurrence reports.

MS-1.2 tasked the contractor to develop and implement an assessment plan to periodically evaluate the continued efficacy of the lessons learned program and corrective actions taken in response to significant events. The 5-SigPER CAP Strategy, Effectiveness Evaluations of Significant Event Corrective Actions, TFC-PLN-10 Rev E, and both the FY2008 and FY2009 integrated assessment schedules were reviewed. While the schedule contained ORP assessment activities of the lessons learned program, no such evidence could be found for the contractor. One activity, FY2009-ESHQ-M-0123 - Performance Assurance SMP, was found that discussed lessons learned, but did not provide any evaluation of the effectiveness of the program. The FY2009 schedule did contain evidence to support that WRPS is conducting assessments of corrective action effectiveness in regard to significant events.

The ORP review specified in MS-1.3 of the contractor evaluation conducted for MS-1.1, DOE-ORP Review of RPP-RPT-35553, Causal Analysis and Corrective Action Evaluation Report was reviewed and found to adequately summarize the effectiveness of the contractor review. However, a review of events since contract transition indicates a weakness in getting final reports submitted into the ORPS database in a timely manner.

The ORP Manager direction identified in MS-1.4 and transmitted to the contractor in Contract No. DE-AC27-99RL14047 - C-109 Readiness Assessment Expectations was reviewed and found to clearly establish Type A corrective action completion as a prerequisite to the restart of single shell tank retrieval operations at either S-102 or C-Farm.

Conclusions:

Implementation of TFC-PLN-10 did not result in specific assessments of the effectiveness of the lessons learned program as stated in CHG MS-1.2, although WRPS does include lessons learned effectiveness in several other management assessments. The contractor may benefit from including a programmatic assessment that evaluates the overall effectiveness of their lessons learned program that draws from those other various assessments and arrives at a collective program effectiveness determination.

The review of events since contract transition indicates a weakness in getting final reports submitted into the ORPS database in a timely manner. Delays in executing both the PISA and USQ process, in addition to completion of causal analyses appeared to be major contributors to the delays in submitting final occurrence reports. Additionally, information required in update reports including facility manager evaluation could be improved. Coordination between the contractor and DOE-ORP for closure of final occurrence reports needs to be strengthened.

Rating:

Effective

Recommendation for Completion:

None

Suggestions for Continued Improvement:

S-MS.1-1
WRPS should evaluate the occurrence reporting/causal analysis processes in order to improve compliance with the requirements of DOE M 231.1-2, and to improve the timely identification and completion of corrective actions for reportable occurrences.

S-MS.1-2
DOE-ORP and WRPS should collaboratively work to improve the timeliness of final occurrence report submittals.

S-MS.1-3
WRPS should update the FY2009 Integrated Assessment Schedule such that assessments evaluating the continued efficacy of the lessons learned program are conducted.

Reviewer:

Roger Claycomb, DOE-ID, Nuclear and Safety Performance Division

Corrective Action Evaluation Form
Type A JON MS-2

JON/Finding:
Type A MS-2, ORP and CH2M HILL need to improve S-102 waste retrieval oversight to ensure that nuclear safety and other safety requirements are met.

All corrective actions were reviewed except for DOE-MS-2.8 which was reviewed for effectiveness in JON CHG-ENG 2.0.

Documents Reviewed:

- Type A Accident Investigation Report, The July 27, 2007 Tank 241-S-102 Waste Spill at the Hanford Tank Farms
- Corrective Action Plan for Type A Accident Investigation Report
- FY2008-CH2M-1-0003, CH2M HILL Hanford Group, Inc. Independent Assessment of Corrective Action Plan Implementation for Tank 241-S-102 Waste Spill Investigation and Analysis Reports Midpoint Assessment
- FY2008-CH2M-I-0007, Corrective Action Plan Implementation for Tank 241-S-102 Waste Spill End Point Assessment
- 7-TF-018, Office of River Protection Investigation of ORP Actions related to the Tank S-102 Waste Spill
- Human Performance Improvement Review of the DOE Response to Tank S-102 Tank Waste Spill
- Assessment of ORP TF Oversight, (Gibbs Report)
- Letter of Direction to CH2M Hill and AMTF

Activities/Operations Observed:

Observed FRs in plan of the day meetings with the tank farm contractor and sat in on FR daily phone in meeting.

Interviews:

- DOE-ORP Quality Assurance
- Training Consultant to DOE-ORP
- DOE-ORP Tank Farms Facility Representative
- WRPS Quality Assurance Manager
- WRPS Performance Assurance/Corrective Actions Manager
- Director, Tank Farm Operations Division, DOE-ORP
- 222S Facility Representative

Results:

A review of the integrated assessment plans of WRPS and ORP shows an increased emphasis on oversight in general and waste operations specifically. WRPS Quality Assurance Services has assigned Quality Assurance Engineers to different projects and all are qualified to the WRPS program. An increased emphasis on waste transfers as well as maintenance on safety significant equipment and material is being shown. A review of the WRPS nonconformance reports (NCR) log and surveillance log shows an added emphasis in these areas.

Due to contractor changes and associated FR oversight activities, only one FR has been able to participate in offsite assessments and verifications. The requirement remains for each FR to participate in an offsite assessment and verification activities. The FR that has participated in assessments, readiness reviews, and ISM verifications stated that he feels this has been a positive learning experience and feel it has improved their overall skill set in performing oversight activities. Those thoughts are echoed by the FR Supervisor. It is suggested that reviewing participation in these activities be accomplished during annual program self assessments to assure all FRs are given the opportunity to meet these requirements.

A review of the Operational Awareness data base shows a significant increase in FR presence on the back shifts, and mid-shifts through unannounced oversight activities. While no significant findings were identified during the 45 unannounced visits, discussions with tank farm operations personnel showed that they were aware that FRs could show up anytime during operational activities. It is difficult to assess whether this practice has added to the operational effectiveness of the tank farm contractor but it has given new awareness and visibility to the FR program at the tank farms.

A review of the ORP integrated assessment plan and their internal schedule of surveillances by both engineering and QA organizations shows an increase in frequency of assessments and also shows improved contractor oversight of engineering, safety, health, and quality areas. There are also a number of oversight activities that are being performed that are not on the integrated assessment schedule which tends to show independent assessments such as audits. While this may be appropriate there may also be some benefits realized from placing all assessments on this schedule to highlight those areas of interest from ORP. Operational awareness oversight activities could still be accomplished as the needs arise and new priorities emerge.

A review of self ORP assessments performed in FY 2008 Strengthen the ORP internal assessment program to include a minimum of two internal assessments per year performed by ORP Environmental Safety and Quality staff. Self assessments A-08-ESQ-INTERNAL-002: *Self-Assessment of ORP Oversight Program,* A-08-ESQ-INTERNAL-001: *Office of River Protection, Federal Sub-Project Director,* A-08-AMTF-INTERNAL-009: *Facility Representative Program Self Assessment* and S-08-ESQ-INTERNAL-005: *Testing and Storage of HEPA Filters* were reviewed. The assessments were thorough and identified areas for compliance as well as for improvement activities and show an effective self assessment process.

ORP Quality Assurance has added two federal employees and two contractor staff to assist with program and oversight activities, operations has added four FRs (two are currently in the

certification process), and engineering has hired 5 engineers (29 total general engineering positions have been filled). One area that is of concern is that there is no occupational safety specialist listed on the organization chart with one position vacant.

Based on interviews and review of the ORP oversight schedule, the main source of ORP federal oversight at the tank farms seems to be the responsibility of the Facility Representatives. There is little routine presence from the SME staff (Quality Assurance, Industrial Hygiene, Radiation Control, and Safety). This places additional workload on the FR staff. ORP should consider increasing tank farm field presence of SMEs to strengthen field oversight, and to improve support to the FRs. This would result in more frequent interface with tank farm facility representatives and contractor personnel, and would strengthen the overall ORP oversight program.

All scheduled surveillance activities from QA do not appear on the integrated assessment schedule which tends to show only independent assessments such as audits. While this may be appropriate there may also be some benefits realized from placing all assessments on the integrated schedule to highlight those areas of interest from ORP.

A review of the existing contractor process hazard analyses and associated design features for retrieval systems to ensure nuclear safety and other safety requirements are met and evaluation of effectiveness is documented in JON CHG-ENG 2.0.

The assessment of the contractor actions to improve emergency preparedness and abnormal event response for retrieval activities were thorough and included oversight performed during the period March-June 2008 including one unannounced exercise on March 12, 2008, and the scheduled third quarter exercise on June 19, 2008. The assessment verified contractor actions were sufficient to close corrective actions associated with the S-102 emergency response activities.

Conclusions:

Overall, there has been marked improvement in oversight activities in response to the S-102 event. ORP has staffed up to meet oversight demands. The new tank operations contractor, WRPS, has placed increased emphasis on management and support staff (QA, Safety, Engineering, and Nuclear Safety and Management) oversight of retrieval, transfers, general operations, and maintenance activities.

Rating:

Effective

Recommendation for Completion:

None

Suggestions for Continued Improvement:

S-MS.2-1
ORP should increase tank farm field presence of SMEs to strengthen field oversight, and to improve support to the tank farm FRs.

S-MS.2-1
ORP should consider including all QA oversight activities (surveillances) on the integrated assessment schedule (those conducted beyond the established schedule are not normally added to the schedule once completed).

Reviewer:

Greg Hayward, DOE-ID, Nuclear Safety and Performance Division

Corrective Action Evaluation Form
EM-60 4.0

JON/Finding:
EM-60 4.0, The USQ process for the S-102 pump design change did not identify that the redesigned dilution water system and sparge system were "physically connected" to the waste transfer system without being properly isolated as required by the Technical Safety Requirements. Thus, installation of the S-102 pump design change without providing proper isolation of the dilution water and sparge systems from the waste transfer system constituted a violation of the Technical Safety Requirements. Questions about the understanding of "physically connected" to a waste transfer system had arisen earlier during design of water supply lines on other waste pumping systems with centrifugal pumps; these questions had not resulted in any clarification or proposed change to the Technical Safety Requirements.

Corrective Actions Reviewed:

CATPR-01:
Update definition of physically connected in DSA and TSR. In addition to addressing the specific issue with the definition identified in this report, this amendment will integrate changes required to address other leak paths that may not be covered in the current definition of physically connected, and any changes to waste transfer leak controls identified in corrective action ENG-4 of the U.S. Department of Energy Type A Accident Investigation Report for the 241-S-102 Waste Spill.

CATPR-03:
Provide training to Engineers, Operations Engineers, and Shift Managers.

Documents Reviewed:

- Letter Olinger to Fulton, 07-TF-029, *EM-60 Review Report: Hanford Tank S-102 Waste Spill Event, August 2007*
- CH2M-PER-2007-1370.5
- CH2M-PER-2007-1370.7
- Power Point Presentation, Training for Engineers and Operating Engineers, *The Importance of Literal Interpretations of Technical Safety Requirements*
- Letter Fulton to Olinger, CH2M-0800183 R3, Request for Approval of Safety Basis Amendment to Revise Applicability of Waste Transfer Controls, dated July 23, 2008
- TSR Lessons Learned Training for Engineers and OEs, Training Activity Number T07038, October 2007 Revision 00 (includes training roster)

Activities/Operations Observed:

None

Interviews:

- WRPS, Manager Nuclear Safety
- WRPS, Nuclear Safety and Licensing Engineer (3)
- WRPS Manager, Central Design Authority and Standards
- WRPS Engineering Program Specialist, Central Design Authority and Standards

A document review of the corrective actions and evidence files indicates adequate completion of the corrective action. Follow-up interviews were conducted to assess the effectiveness of the corrective actions. The results are that the corrective actions for CH2M-PER-2007-1370.5 and 1370.7 have been effective in addressing the finding.

Conclusions:

Interpretation of a TSR control and definition of "physically connected" was implicated in the design errors that allowed the S-102 leak to occur. Review of the revised safety basis documents indicates clarifications to the "physically connected" definition and the TSR controls have been completed. The power point presentation and lessons learned training provided to retrain contractor personnel on the revisions and the reason for the TSR violation was clear and concise. These corrective actions are judged to be effective.

Rating:

Effective

Recommendation for Completion:

None

Suggestions for Continued Improvement:

None

Reviewer:

Jacquelyn Carrozza, DOE-ID, Nuclear Safety and Performance

Corrective Action Evaluation Form
EM-60 6.0

JON/Finding: EM-60 (6)

Corrective Actions Reviewed:

EM-60 (6.1)
Issue a Just in Time Lessons Learned (JIT-LL) to all managers on the less than adequate extent of condition review performed for PER-2005-3379.

EM-60 (6.2)
Brief the ESRB on the lessons learned from the less than adequate extent of condition review for PER-2005-3379.

EM-60 (6.3)
Brief Corrective Action Management Operations Specialists on expectations for adequate extent of condition reviews.

EM-60 (6.4)
Conduct monthly Management Observation Program (MOP) assessment evaluating the quality of resolutions for PERs with Resolution, including the quality of extent of condition reviews, causal analysis and corrective action plans.

Documents Reviewed:

- Just in Time Lessons Learned 07-040, Extent of Conditions Reviews
- Executive Safety Review Board Meeting Minutes 2007-14 from August 30, 2007
- Apparent Cause Analysis Course Completion Roster from October 12, 2007
- Management Observation Checklist for *Quality of PER Extent of Condition and Apparent Cause Analysis*, dated October 31, 2007
- Management Observation Checklist for *Quality of PER Extent of Condition and Apparent Cause Analysis*, dated November 29, 2007
- Management Observation Checklist for *Quality of PER Extent of Condition and Apparent Cause Analysis*, dated December 27, 2007
- TFC-ESHQ-Q_C-C-01, *Problem Evaluation Request*, Rev E

Activities/Operations Observed:

None

Interviews:

- Operations Support Specialist
- Quality Assurance Engineer

Results:

The assessor verified the JIT-LL adequately identified the concern stated and provided reasonable lessons learned. He also verified, via meeting minutes, that the lessons learned were discussed with the ESRB in August 2007, and briefings were provided to Corrective Action Management Operations Specialists in October 2007.

Three Management Observation activities were conducted in consecutive months in 2007, to review the quality of PER extent of condition and apparent cause analysis. Each report identified improvement from the previous one. The final report, from December 2007, concluded, "This MOP indicates a significant improvement of the conduct and documentation of apparent cause analysis, although refresher briefings are required to bring the quality up to current expectations. Responsible managers are making a conscientious effort and the quality of the PERs with resolution will continue to be monitored."

A recent revision to TFC-ESHQ-Q_C-C-01 modified the PER process to integrate Performance Assurance. After the PER screening, Performance Assurance reviews the screen to validate the results. Further, upon completion of the corrective actions, Performance Assurance also validates satisfactory completion. Because the revision to TFC-ESHQ-Q_C-C-01 was issued March 24, 2009, effectiveness of the process change cannot be definitively measured, but the process has been in place informally for several months and quality improvements are being noted as a result.

Conclusions:

Corrective actions were completed as designated. TFC-ESHQ-Q_C-C-01 was recently revised to insert Performance Assurance into the process to assure process compliance and quality standards. This should drive continued improvement.

Rating:

Effective

Recommendation for Completion:

None

Suggestions for Continued Improvement:

None

Reviewer:

Kerry Schierman, DOE-RL, Facility Representative

Corrective Action Evaluation Form
EM-60 10.1

JON/FINDING:
EM-60 10.1 - As identified in the EM-60 Review Report, titled "Hanford Tank S-102 Waste Spill Event" item #EM-60-23 noted that, "According to contractor organization charts, the Closure Shift Operations Manager is not directly in the Chain of Command for the Closure Operations tank farm operators." This PER has been written to address this issue.

Corrective Actions Reviewed:

CA-1
Realign the CO organization such that persons performing waste retrieval transfer operations report to a single manager.

Documents Reviewed:

- PER-CH2M-PER-2007-1821
- Causal Analysis
- Final Report FY2008-CH2M-1-0003; CH2M HILL Hanford Group, Inc. Independent Assessment of Corrective Action Plan Implementation for Tank 241-S-102 Waste Spill Investigation and Analysis Reports Midpoint Assessment, February 11 - February 29, 2008.
- TO-220-113; Over-Ground Transfer from 241-C-110 to 241-AN-106 and Sluicing of Tank 241-C-110
- Standing Order CO-07-008, Original Revision; Chain of Command During Retrieval Operations
- Standing Order CO-07-008, Rev 8; C-110 Retrieval Operations
- Course # 35E043; Emergency Preparedness Post Drill Evaluation; Contaminated Worker C-Farm
- TFC-OPS-DRILL-004; Emergency Preparedness Post Drill Evaluation; Response to a Tank Waste Spill,
- Operational Readiness Checklist Single-Shell Tank 241-C-110 Waste Retrieval and Transfer to Double Shell tank 241-AN-106.
- Operational Awareness Database

Activities/Operations Observed:

- TFC-09-0439; Install new Drain Seal Assemblies in AZ-101/102A Pit
- WFO-WO-05-002807; Replace Chiller AZ-CW-R-1

Interviews:

- Operations Organization Manager
- Closure Operations Manager
- Closure Project Manager

- Operating Engineer
- Security and Emergency Services/Events Investigation personnel
- Mr. Jerry Long, CH2MHILL VP of Operations during the S-102 event
- Mr. Ted Jarecki, CH2MHILL Waste Feed Operations Shift Manager during the S-102 event

Results:

Analysis of the S-102 event determined that the Closure Operations organization structure reports up through three Operations Directors during a retrieval event. The analysis included an extent of condition, which was performed for other areas at the site. Waste feed operations reported through one position at the time of the event, and was an example of the benefits of a single contact roll-up position, which was conducive to clear concise communications and help to ensure overall good conduct of operations. Organizational changes were made to realign the closure organization to report to one person. An Operational Awareness Database entry validates these changes were made, which the assessors verified during the review. Other changes were made to help streamline the organization, such as consolidating both shift managers' offices into a single shift office at MO-268, which eventually included consolidation of work release into the same office.

The assessor reviewed Standing Order CO-07-008, Rev 8, which clarified the Chain of Command for the activity of performing retrieval operations and differentiates it from the management chain of the Retrieval Operations Organization as follows:

> "During Modified Sluicing, the Chain of Command is from the Retrieval Operations Engineer, to the Base Operations Senior Shift Manager. During any off-normal response, this same Chain of Command is to be followed. The Retrieval Operations Engineer will provide information and guidance, but the Base Operations Shift Manager will be the final authority of any path forward."

The Standing Order has been expanded in scope since originally issued. When originally issued in November of 2007, its title reflected its sole purpose, "Chain of Command During Retrieval Operations", which was limited to addressing these changes. At the time of this assessment, 8 revisions have been issued, and the scope of the Standing Order has been expanded to also include retrieval control requirements, including radiological monitoring information, Senior Supervisory Watch information, and the use of cameras during tank waste retrievals.

Revision 8 of the Standing Order also did not include any wording to indicate when or how it will be cancelled. The original Standing Order contained words to this effect -- "this Standing Order will remain in force until a formal organizational change is implemented and the new organizational structure and necessary procedure changes are reviewed by the Chief Operating Officer and determined to satisfy the issue identified in CH2M-PER-2007-1821". Discussions with the interviewees indicate that the current Standing Order will remain in effect through the C-110 retrieval period, after which it will be cancelled. During the next retrieval project, the Standing Order will either be reinstituted per a prerequisite in the retrieval procedure, or the requirements and direction from the Standing Order will be incorporated directly into the retrieval procedure. Using a standing order format is beneficial in that it is easily changed, which provides flexibility. This plan was not in writing, but the contractor has committed to

performing a level 3 Readiness Assessment prior to the next retrieval operation, scheduled at C-104. The level 3 RA will include an Operational Readiness Checklist, which is the correct vehicle for ensuring the Chain of Command requirements are clearly outlined either in a Standing Order or the retrieval procedure. A check of the Operational Readiness Checklist for the C-110 project showed that the roles and responsibilities were discussed in separate line items, one of which reads,

> "**Roles, responsibilities and reporting relationships** have been established for safe accomplishment of work related to the project/activity (via administrative procedures, organization charts, position descriptions, training programs, and internal memoranda)

Interviews with personnel showed a strong knowledge of the Chain of Command requirements during retrieval. The Closure Operating Engineer indicated that he was provided training on the proper Chain of Command during retrieval.

The assessors also interviewed emergency drill personnel, and reviewed drill reports, which indicated that the Chain of Command changes were also tested during abnormal event drills. The drill reports reviewed showed that the changes made to consolidate shift managers offices, and the training and method of employing the new organizational requirements was effective.

Conclusions:

The Standing Order which incorporated the requirements for the Chain of Command is an effective method of codifying the requirements. The requirements have been employed via training, and drills have verified the effectiveness of the changes.

Rating:

Effective

Recommendation for Completion:

None

Suggestions for Continued Improvement:

S-EM-60 10.1-1
Standing Order 07-008 should be revised to include a statement directing the length of time the Standing Order will remain in effect, and how the requirements of the order will be captured for future projects.

Reviewer:

Ron Ciola, DOE-ORP, Facility Representative

Corrective Action Evaluation Form
EM-60 11.0

JON/Finding:
EM-60 11, (Pages 7-8 of Enclosure to DOE-ORP Letter 07-TF-029, *EM-60 Review Report: Hanford Tank S-102 Waste Spill Event, August 2007*)

When Waste Transfer operations were commenced during the dayshift prior to the spill, the S-102 pump was started with the discharge valve closed because the specific step in the operating procedure to ensure the discharge valve was open was not performed. As a result the pump tripped. Waste transfer operations were recommenced about 30 minutes after the mispositioned valve was discovered, without performing an immediate critique of the event on shift.

The operating procedure states that high discharge pressure may result in pump damage. The pump is a positive displacement pump, which is capable of developing very high discharge pressure when operated with the discharge valve shut. There was no detailed assessment of the potential pump or waste transfer system damage performed prior to restarting the pump and commencing waste transfer.

Corrective Actions Reviewed:

CH2M-PER-2007-1299.1: Engineering perform and document a review of this event, as related to potential piping stress between the S-102 pump and the V-106 valve, including the V-106 valve to determine if any equipment damage resulted.

Documents Reviewed:

- TF-07-025, *Technical Evaluation for the S-102 Riser 7 Seepex Retrieval Pump*

Activities/Operations Observed:

None

Interviews:

- Acting Manager, West System Engineering, Washington River Protection Solutions

Results:

A document review of the corrective actions and evidence files indicates adequate completion of the corrective action. Follow-up interviews were conducted to assess the effectiveness of the corrective actions. The results are that the corrective actions for CH2M-PER-2007-1299.1 have been effective in addressing the finding.

Conclusions:

The EM-60 Review Report discussion concerning procedure execution issues was addressed separately via CH2M-PER-2007-1737 as part of the response to JON-ENG-1 of the DOE Type A Investigation. The engineering analysis of the overpressure event showed that the pump, valve V-106, and all discharge piping and hose components were designed and tested for pressures well in excess of the pressure actually developed during the event. There was no damage to them. After the event, DOE decided to abandon the Seepex pump and pursue waste retrieval in Tank S-102 using different technology. Hence the piping and electrical systems for the Seepex pump were removed and there will be no further use of the piping or valve manifold. The corrective actions are considered effective in resolving the EM-60 trip report issue.

Rating:

Effective

Recommendation for Completion:

None

Suggestions for Continued Improvement:

None

Reviewer:

Earl Hughes, DOE-HQ, Office of Health, Safety and Security

Corrective Action Evaluation Form
RCA JON-5

JON/Finding:
RCA JON-5,
RC-01 – Engineering Design Less Than Adequate (LTA)
The S-102 WRS design process was deficient. Specifically, LTA hazards evaluation that did not address the potential waste transfer misroute accident scenario in the DSA. Additionally, the design was not re-evaluated following the radiological contamination of support systems in C Farm in 2005.

Several changes to processes and hardware were made starting in late 2002 that culminated in the installation and operation in S-102 of a WRS that was not designed to prevent or contain a waste leak from a raw water supply hose. Other changes, such as a revision to CH2M HILL's Water Quality Standard in 2004, changes in S-102 retrieval system configurations, and modifications to the Seepex pump were not adequately evaluated.

RC-02 – Management of Change LTA
The change in reverse pump motor speed from 15 to 45 Hz which increased suction cavity pressure by a factor of nine, the strainer plate configuration which reduced the available inlet/outlet surface area by greater than 50%, and relocation of the dilution line output port in Seepex #2 were not adequately analyzed. Although efforts were made to analyze the changes made between to two pumps, the process used was informal and the results were not reviewed or approved by S-Farm managers.

When Seepex #1 was in operation, a rotary viper was installed in Riser 2 approximately two feet from the pump suction in order clear the pump suction and to provide an area of waste slurry around the suction. When Seepex #2 was installed, the rotary viper was removed and a camera was installed in Riser 2. The lack of ability to maintain a cavity or pool around the pump suction was not adequately evaluated.

JON-5: Conduct Contractor Readiness Assessment for retrievals prior to resuming operations.

Corrective Actions Reviewed:

JON-5.1
Update the Startup Notification Report (SNR) to require Level 2 Readiness Assessments prior to commencing the first retrievals in S-Farm (S-102) and C-Farm (C-109) and a Level 3 Readiness Assessment for the C-104 retrieval. Obtain DOE ORP approval of the revised SNR.

JON-5.2
Conduct Level 2 Readiness Assessment for tank 241-S-102 retrieval. Withdraw justification: The level of required Readiness Assessment has been identified in the Startup Notification Report and will be updated based on project schedules.

JON-5.3
Conduct Level 2 Readiness Assessment for tank 241-C-109 retrieval.

JON-5.4
Conduct Level 3 Readiness Assessment for tank 241-C-104 retrieval. Withdraw justification: The level of required Readiness Assessment has been identified in the Startup Notification Report and will be updated based on project schedules.

Documents Reviewed:

- CH2MHILL Letter CH2M-0303291.16 Reissue, Quarterly Startup Notification Report (SNR), dated September 26, 2007
- DOE-ORP Letter 07-TOD-100, SNR Approval, dated September 27, 2007
- CH2MHILL Letter CH2M-0303291.17, Quarterly SNR, dated December 20, 2007
- CH2MHILL Letter CH2M-0303291.18, Amended SNR, dated February 6, 2008
- DOE-ORP Letter 08-TOD-018, SNR Approval, dated February 19, 2008
- CH2MHILL Letter CH2M-0303291.19, Quarterly SNR, dated March 20, 2008
- DOE-ORP Letter 08-TOD-034, SNR Approval, dated March 31, 2008
- CH2MHILL Letter CH2M-0303291.20, Quarterly SNR, dated June 25, 2008
- DOE-ORP Letter 08-TOD-063, SNR Approval, dated July 8, 2008
- CH2MHILL Letter CH2M-0303291.21, Quarterly SNR, dated August 15, 2008
- DOE-ORP Letter 08-TPD-067, SNR Receipt Acknowledgment, dated September 29, 2008
- WRPS Letter WRPS-0800239, Quarterly SNR, dated December 10, 2008
- DOE-ORP Letter 08-TPD-094, SNR Approval, dated December 22, 2008
- WRPS Letter WRPS-0900325, Clarification of Commitment for a Readiness Assessment to Start Retrieval From Single-Shell Tanks 241-C-110 and 241-C-104, dated March 16, 2009
- WRPS Letter WRPS-0900385, Quarterly SNR, dated March 18, 2009
- DOE-ORP Letter 09-TPD-024, SNR Approval, dated March 30, 2009
- *Contractor Readiness Assessment Report for the Single Shell Tank 241-C-109 Waste Retrieval Resumption and Deployment of FOLDTRACK Mobile Retrieval Tool*, Rev 1, dated May 8, 2008

Activities/Operations Observed:

None

Interviews:

- Construction and Commissioning Operational Readiness Lead
- Quality Assurance Engineer

Results:

The corrective actions designated utilized the startup process readiness reviews to verify engineering design and management of change processes were functioning adequately for subsequent retrieval design activities. Although that process has proven successful in identifying issues and returning them for correction prior to authorization for startup, using readiness reviews as a quality control mechanism was not the optimal long-term method to establish quality. Recognizing this, the Contractor also designated JON-2 to provide detailed guidance/criteria for the CH2M HILL oversight of subcontracted engineering design including input and output documents, and JON-6 to adopt a Management of Change process similar to that described in Occupational Safety and Health Administration (OSHA) standard 29 CFR 1910.119, *Process Safety Management of Highly Hazardous Chemicals.*

The initial SNR issued following the event met the conditions specified in JON-5.1. A Readiness Assessment was completed for tank 241-C-109, as specified (JON-5.3). However, subsequent SNR reports withdrew specific Readiness Assessment designations for 241-S-102 and 241-C-104 retrieval activities. Correspondingly, JON-5.2 and JON-5.4 were withdrawn, justified by a statement that readiness activities had been identified in the SNR and would be updated based upon project schedules, via that vehicle. 241-S-102 retrieval activity was removed from the SNR in September 2008, based upon no intention to initiate the activity in Fiscal Year 2009. 241-C-104 was removed from the SNR in March 2009, based upon approval of an Activity Description that designated an Operational Readiness Checklist as the appropriate level of readiness validation. DOE-ORP approved each of the SNR changes via letter.

Regardless, corrective actions designated for JON-2 and JON-6 were completed, establishing the more appropriate mechanisms to validate engineering design and manage change within those processes, restoring the readiness review process to verification activity. JON-2 corrective actions were validated elsewhere in this report. JON-6 corrective actions were validated via equivalent corrective actions for Type A ENG-2, also elsewhere within this report.

Conclusions:

The corrective actions taken to address RCA JON-5 were adequate to assure short-term success in establishing quality in engineering design and change management. Long-term success will be measured by the effectiveness of JON-2 and JON-6, which were not evaluated for JON-5, but were evaluated elsewhere within this report (see above discussion). This corrective action is being designated as effective as it proved an acceptable method for ensuring engineering design and management of change were acceptable in the specific short-term applications designated.

Rating:

Effective

Recommendation for Completion:

None

Suggestions for Continued Improvement:

None

Reviewer:

Kerry Schierman, DOE-RL, Facility Representative

Corrective Action Evaluation Form
RCA JON-8

JON/Finding:
RCA JON-8, CC-01 – Formality of Operations LTA - The potential for tank waste to migrate into tank-connected retrieval support systems in C-Farm was identified in 2005; however the documented extent of condition review for that issue was not reviewed by Operations. This was a missed opportunity to identify and correct the system configuration. This and other examples of informality and LTA implementation of Conduct of Operations (COO), such as not maintaining an S-Farm shift log, and imprecise communications, combined to create a culture that resulted in failure to recognize the initial indications of the spill.

JON-8 – Perform Human Performance Improvement (HPI) review of waste transfer operating procedures

Corrective Actions Reviewed:

JON-8.1.2 – Utilizing workers who perform transfers and at least two qualified HPI champions revise at least 3 transfer procedures to incorporate lessons learned from the S-102 leak event.

JON-8.1.3 – Incorporate the lessons learned from completion of action JON 8.1.2, into procedure TFC-OPS-OPER-C-13 (Technical Procedure Control and Use) to enhance implementation of HPI philosophy.

Documents Reviewed:

- TFC-OPS-OPER-STD-01 rev A-2, *Technical Procedure Format and Preparation Standard*;
- TFC-OPS-OPER-STD-01 rev A-4, *Technical Procedure Format and Preparation Standard*;
- A-6002-909 (REV 3), *Verification/Validation (V&V) Checklist*;
- A-6002-909 (REV 6), *Verification/Validation (V&V) Checklist*;
- TO-220-110, A-7, *Over Ground Transfer From 241-C-108 to 241-AN-106 and Sluicing of Tank 241-C-108*
- TO-220-112, B-O, *Over Ground Transfer From 241-C-109 to 241-AN-106 and Sluicing of Tank 241-C-109*
- TO-XXX-XXX, A-O (DST to DST Transfer Template), *SENDTANK TO RECEIVE TANK*
- TO-220-113, A-10, *Over-Ground Transfer from 241-C-110 to 241-AN-106 and Sluicing of Tank 241-C-110*;
- TFC-OPS-MAINT-C-01, rev N-9, *Tank Operations Contractor Work Control*;
- A-6004-102 (04/06), *Team Review Meeting Checklist*;
- TFC-WO-0x-xxxx, *Closure Operations Work Control Template*

Activities/Operations Observed:

None

Interviews:

- Retrieval and Closure Work Control Manager
- ESH&Q SST Manager

Results:

The evidence files and documentation for JON-8 corrective actions 8.1.2 and 8.1.3 indicated that all corrective actions have been adequately completed and closed out. The JON 8.1.2 file contained three waste transfer procedures that were reviewed and revised; however, it was unclear as to what specific S-102 lessons learned were actually incorporated. The current ESH&Q SST Manager led the review and explained that a meeting with S-102 operators and managers was held to discuss what changes were needed for subsequent transfer procedures. The intent of the meeting participants was to identify problems with the S-102 transfer procedure and to address them in changes to the three transfer procedures. The file also contained comments and improvements to the procedures identified during the review with the HPI checklist.

The JON 8.1.3 corrective action evidence file contained highlighted changes to the *Verification and Validation (V&V) Checklist* and changes to procedure TFC-OPS-OPER-STD-01, *Technical Procedure Format and Preparation Standard*. The corrective action identified that lessons learned from the completion of action JON 8.1.2 would be incorporated into procedure TFC-OPS-OPER-C-13, *Technical Procedure Control and Use*. Changes to this procedure were not required since changes to TFC-OPS-OPER-STD-01, *Technical Procedure Format and Preparation Standard* were more applicable. This determination appeared appropriate since procedure development is where HPI error prevention techniques should be incorporated. Changes made to TFC-OPS-OPER-STD-01 rev A-2, *Technical Procedure Format and Preparation Standard* included adding the concept of "critical task" and clarification of verb usage (e.g., "ensure"). These changes have been maintained in the latest revision.

The current C-110 retrieval procedure was reviewed and it contained appropriate identification of critical tasks, Warning statements and Caution statements. The procedure is generally well written.

In the current revision to Form A-6002-909 (REV 6), *Verification/Validation (V&V) Checklist* the Technical Authority section no longer contains checklist item, "Have critical tasks been identified?" This item was on revision 3 as a corrective action and there was no evidence or justification for its removal.

Procedure TFC-OPS-MAINT-C-01, rev N-9, *Tank Operations Contractor Work Control* was not part of the evidence file but was reviewed to assess if HPI error prevention techniques are considered for work instructions. Warning and Caution statements are addressed among other

things, but there is no guidance for critical tasks. However, the *Closure Operations Work Control Template* and *Team Review Meeting Checklist* provided evidence that work instructions address critical tasks.

Conclusions:

Although the assessor was unable to determine if specific, applicable lessons learned from the S-102 leak event were incorporated into the revised waste transfer procedures (no crosswalk was developed or maintained), the waste transfer procedures reviewed contained appropriate identification of critical tasks and are well written. Procedure TFC-OPS-OPER-STD-01, *Technical Procedure Format and Preparation Standard* contained adequate guidance for incorporating critical tasks and other error prevention techniques. The V&V checklist was generally adequate; however the critical task checklist item identified in JON-8.1.3 was not maintained for the Technical Authority. Finally, a template for critical tasks is part of the work instruction development process and is reviewed in team meetings; however, the guidance in TFC-OPS-MAINT-C-01, *Tank Operations Contractor Work Control* does not address critical task in the work instruction writer's guide.

Rating:

Effective

Recommendation for Completion:

None

Suggestions for Continued Improvement:

S-RCA-JON-8-1
Form A-6002-909, *Verification/Validation (V&V) Checklist* should be updated to require the Technical Authority to ensure critical tasks have been identified.

S-RCA-JON-8-2
Procedure TFC-OPS-MAINT-C-01, *Tank Operations Contractor Work Control* should contain critical task guidance.

Reviewer:

Joe Sondag, DOE-ORP, Facility Representative

Corrective Action Evaluation Form
RCA JON-9

JON/Finding: RCA JON-9

CC-02 – Radiological Controls Survey Techniques LTA
Open window beta radiation readings were not taken during initial indication of HRA, and a review of survey records indicate that this is a widespread problem.

Had beta radiation measurements been taken the leak may have been identified at about 0200 on July 27.

JON-9 – Conduct training for HPTs, RadCon FLMs, and Radiological Engineers on the expectations for the conduct and recording of radiological surveys and on the conduct of RadCon deficiencies.

Corrective Actions Reviewed:

JON 9.1 – Issue Lessons Learned regarding S-102 radiation monitoring deficiency pertaining to failure to perform both window open and window closed radiation measurements.

JON 9.2 – Brief Health Physic Technicians & First Line Managers on Just in Time/Lessons Learned 07-037 and procedural requirements to perform Window Open and Window Closed radiation measurements when performing radiation monitoring.

JON 9.3 – Revise RO-20 On the Job Training to include guidance from RO-3B On the Job Training regarding instrument operating technique to begin radiation measurements with the window open.

JON 9.4 – Brief Health Physics Technicians and Radiological Control First Line Managers on revised RO-20 On the Job Training.

JON 9.5 – Revise Oral Board/Performance Demonstration scenarios to require Health Physics Technicians to monitor both window open and window closed radiation levels.

JON 9.6 – Perform assessment within the Radiological Control Projects to verify radiation surveys include both window open and window closed readings including a review of 10% of radiological survey reports completed for the previous three months to verify window open and window closed readings were documented and Deep Dose Equivalent and Shallow Dose Equivalent readings were accurately calculated.

JON 9.7 – Incorporate process to evaluate and document radiation monitoring requirements (including evaluation of the need for Area Radiation Monitoring) into procedure TFC-ESHQ-RP_ADM-P-01, "Radiological Monitoring During Waste Transfers and Waste Pump Maintenance Activities".

JON 9.7.1 – Brief end users on revised TFC-ESHQ-RP_ADM-P-01, Radiological Monitoring During Waste Transfers and Waste Pump Maintenance Activities procedure and associated TSR leak detection and Radiological Control monitoring requirements.

JON 9.7.2 – Review all active waste transfer procedures and revise, as necessary, according to revised version of TFC-ESHQ-RP_ADM-P-01 "Radiological Monitoring During Waste Transfers and Waste Pump Maintenance Activities".

Documents Reviewed:

- Just in Time/Lessons Learned 07-037, (*Closed Window Radiation Readings May Be Only Half the Story*)
- HPT attendance rosters for S-102 Lessons Learned briefing
- RCT Site Generic OJT Program, OJT Instructor Guide and Student Guide for Course Number 022503, Task 022503 – *Operation of the Eberline RO-20 Survey Meter*
- Activity Tracking Information Sheet and the OJT Briefing Material for RO-20 On the Job Training
- HPT Course Completion Rosters for OJT Briefing Material for RO-20 On the Job Training
- CH2M Hill Interoffice Memorandum, 79A00-LML-08-018, *Scenario Review*
- CH2M Hill Interoffice Memorandum, 79A00-LML-08-015, *Radiological Control Oral Examination Board Personnel*
- CH2M Hill Management Assessment FY2008-SHQ-S-0343, *Verification of Window-Open and Window-Closed Radiation Readings*
- Lesson Plan for Course # 351038, *Radiological Monitoring for Waste Transfers*
- Training Course Materials for #351038 Rev. 0801.0, *Radiological Monitoring for Waste Transfers*
- Course completion roster for *Radiological Monitoring During Waste Transfers Course 351038*
- *241-C-110 Transfer Survey Worksheet*
- Training materials for course number 356431, *HPT Radiological Monitoring for Waste Transfers – Walkdown Checklist*
- Training Materials for course number 356429, *HPT Radiological Monitoring for Waste Transfers – Classroom*
- Internal Memorandum WRPS-0900119, dated January 20, 2009, *Completion of Training Requirements for Health Physic Technician Support of 241-C-110 Retrieval Operations*
- RPP-PLAN-35830, rev. 5, *Radiological Control Monitoring Plan for Tank 241-C-110 to Tank 241-AN-106 Waste Transfer*
- Task No. COO-VAR6, Rev.2, *Radiological Control Scheduled Radiation Survey Task Description*
- Radiological Survey Reports: COC 001465, COC 001467, COC 001476, COC 001477, COC 001479, COC 001480, COC 001481, COC 001487, COC 001488 and COC 001491
- TO-220-113, *Over-Ground Transfer from 241-C-110 to 241-AN-106 and Sluicing of Tank 241-C-110*
- TFC-ESHQ-RP_ADM-P-01, *Radiological Monitoring During Waste Transfers and Waste Pump Maintenance Activities*

Activities/Operations Observed:

- Radiation surveys performed by HPTs using the RO20 during 241-C-104 construction work and 241-C-110 Install/Remove Ops Cameras at Risers 3 & 6.
- Briefing and field walk down of the 241-C-110 to 241-AN-106 waste retrieval system for HPTs in training for C-110 retrieval operations (course number 356431, "HPT Radiological Monitoring for Waste Transfers – Walkdown Checklist.")

Interviews:

- Radiological Controls First Line Supervisors (3)
- Health Physics Technicians (7)

Results:

The evidence files and documentation for JON-9 corrective action 9.1 through 9.7 indicated that all corrective actions have been adequately completed and closed out. Corrective actions to address less than adequate survey techniques included a briefing to existing HPTs on the S-102 Lessons Learned and the HPT instructor and trainee guides for operating the RO-20 were updated. In addition, training was implemented for the Technical Safety Requirement monitoring requirements, radiological controls requirements and potential indications of waste confinement failure for HPT monitoring on the waste transfer system.

During C-104 construction work and the camera work in the C-110 risers, proper use of the RO-20 was observed by HPTs and they were knowledgeable of the importance of the beta window open measurement. Two qualified HPTs and their first line supervisor covered the Radiological Monitoring Plan during a field walk down of the C-110 waste transfer system with newly assigned HPTs. Survey locations, anticipated dose rates and the upset condition dose rates were discussed. The field walk down appeared to be an effective tool for the HPT trainees since indications of a waste leak were discussed in detail.

Radiological Survey Reports reviewed for C-110 retrieval indicated that beta window open dose rate surveys were conducted. However, four of the 10 RSRs contained transcription errors. For example, on RSR COC 001467, a beta correction factor of "0.6" was entered instead of "2" and on RSRs COC 001465, 001479 and 001491 neutron dose rate values were entered; however, neutron surveys were not performed. Survey data collected in the field is documented on the 241-C-110 Transfer Survey Worksheet, an uncontrolled document, and this information is transcribed to the RSR form.

Conclusions:

The corrective actions taken to address RCA JON-9 were adequate to assure that HPTs are trained on the proper survey techniques when using the RO-20 gamma radiation survey instrument. The HPT training and qualification materials were updated to reflect the need for a Beta Window Open measurement and for HPTs to discuss the importance for it. Additionally, the HPT Radiological Monitoring training for waste transfers and walk down checklist provided examples of what could be an indication of a leak. This corrective action is being designated as effective based on the rigor of the training provided for existing qualified HPTs and for new HPTs assigned to waste retrieval operations. However, the 241-C-110 Transfer Survey Worksheet should be reviewed or controlled to preclude errors.

Rating:

Effective

Recommendation for Completion:

None

Suggestions for Continued Improvement:

S-JON-9-1
The 241-C-110 Transfer Survey Worksheet should be a controlled document/form to ensure that transcription errors are prevented.

Reviewer:

Joe Sondag, DOE-ORP, Facility Representative

Corrective Action Evaluation Form
RCA JON-13

JON/Finding: RCA JON-13

CC-06 – Training LTA
Maintenance and RadCon personnel supporting S-102 retrievals were unfamiliar with the process. Had RadCon personnel supporting the project been made aware of the fact that 80 mrem/hr on contact with the riser extension was the maximum estimated radiation levels during normal operations, then the 200 mrem/hr indication at 10-12 feet should have prompted immediate reporting of the spill.

JON-13: Develop and conduct training for designated operations support personnel involved in the operation, maintenance, and monitoring of process equipment.

Corrective Actions Reviewed:

JON-13.1 – A training needs analysis for operations and support personnel involved in the operation, maintenance, and monitoring of waste transfer and retrieval process equipment, including but not limited to operating parameters and alarm response, expected radiological and toxicological indications during normal and upset conditions, system construction and operations is required. Revise training needs analysis process to ensure that operations and all affected support personnel are included in this process.

Documents Reviewed:

- TFC-BSM-TQ_ADD-C-01, *Training Analysis, Design and Development*, Rev E-1, E-2, and E-4;
- CH2M HILL Required Reading List for TFC-BSM-TQ_ADD-C-01, Rev E-1;
- RPP-PLAN-38530, *Radiological Monitoring Plan for Tank 2741-C-110 to Tank 241-AN-106 Waste Transfer*, Rev 5
- Operations and Support Personnel Qualification Cards

Activities/Operations Observed:

Work Orders:

TFC-09-1566	242A HVAC HMI Loss of Power Alarm Troubleshooting Package
WFO-07-3186	Electrical Repair in AN Farm
TFC-09-0439	Install new Drain Seal Assemblies in AZ-101/102A Pit
WFO-05-2807	Replace Chiller AZ-CW-R-1
CLO -07-0729	Remove Jumpers from C-104 pit
WFO-07-3186	241-AN Repair Lighting and Replace Disconnects
TFC-08-1285	C-110 Install/Remove Ops Cameras at Risers 3 & 6

Briefing and field walk down of the 241-C-110 to 241-AN-106 waste retrieval system for HPTs in training for C-110 retrieval operations (course number 356431, "HPT Radiological Monitoring for Waste Transfers – Walkdown Checklist.")

Interviews:

- Central Design Authority and Standards Engineer
- C Farm Retrieval and Closure Work Control Manager
- Construction Workers
- Field Work Supervisors
- Industrial Hygiene Manager
- Industrial Hygienists
- Maintenance Crafts Persons
- Radiological Control Technicians
- Senior Supervisory Watches
- Single Shell Tanks Radiological Controls Manager
- Training Manager
- Training Specialists
- Technical Development and Deployment Manager

Results:

The issue/action statements for the JON identified the need for (a) a training needs analysis for operations and support personnel; (b) a revision to the training needs and analysis process; and (c) develop and conduct training for support personnel. Of these three specified actions only a revised training needs analysis procedure was specified as a deliverable. Since the deliverable for the specified addressed only item (b), the closure evidence file contained only that information.

TFC-BSM-TQ_ADD-C-01 was initially revised (Rev E-1) to identify the need for training needs analyses and to ensure the analysis process included subject matter experts from support organizations. The assessor verified the document revision had been issued.

It was also noted, however, that the change put into TFC-BSM-TQ_ADD-C-01 was later removed in Rev E-4 of the document. The assessor discussed this condition with the Training Manager, who stated the Root Cause Analysis directed change had been removed as part of a recent overhaul of the training analysis, design and development process. The specific step was removed because he considered the action had now been incorporated into their process, and therefore maintaining the step as written was redundant. Subsequent review of training analyses indicated the procedure remained effective.

Despite the corrective actions for items (a) and (c), above, not being designated as deliverables and therefore not in the closure evidence file, the assessor validated completion of each action.

The assessor was provided a demonstration of the Vision database, used to document training needs analyses and resultant training requirements for Tank Farms technical personnel, and

specifically for support functions that were cited in the JON. The resultant qualification cards viewed appeared to cover areas identified in the JON. The custodian of the database indicated the analyses and cards were being enhanced on an ongoing basis.

Training of Industrial Hygiene personnel was verified by Type A HE-1, and Radiological Controls personnel training was verified by RCA JON 9.5 and Type A WC-3. The assessor also discussed changes made to training requirements as a result of the S-102 event with the Training Manager, the Radiological Controls Manager, and the Central Design Authority and Standards Engineer who had been involved in the Engineering organizations training needs assessment process. They each demonstrated knowledge of changes that had been considered appropriate for their organizations due to the S-102 event and how the changes had been incorporated into organizational training processes.

Multiple assessors also observed field activities to measure personnel competencies and knowledge through discussions/interviews.

When the Executive Safety Review Board (ESRB) agreed to close this item at their meeting of November 29, 2007, they identified that support staff needed training and had not been included. They assigned an action to specifically formalize the process for Engineering to review training packages and carried it as an open ESRB action. The corrective action was implemented by the original TFC-BSM-TQ_ADD-C-01 change discussed above. The ESRB agreed to close their item at their January 24, 2008, meeting.

Conclusions: Although the closure evidence file was not considered complete to address the identified issue (see Suggestion for Continued Improvement below), effectiveness of corrective actions was able to be assessed. Corrective actions taken to conduct training needs analyses, change training requirements, and upgrade the needs analysis process were considered effective. Personnel knowledge was also considered adequate.

Rating:

Effective

Recommendation for Completion:

None

Suggestions for Continued Improvement:

S-RCA JON-13.1-1
Actions that comprehensively address the issue(s) identified in the CH2MHill Root Cause Analysis Report JON 13 should be included in the closure evidence files.

Reviewer:

Lead, Kerry Schierman, DOE-RL, Facility Representative
Jack George, DOE-RL, Facility Representative Program Manager
Joe Sondag, DOE-ORP, Facility Representative
Ron Ciola, DOE-ORP, Facility Representative

Corrective Action Evaluation Form
ER & HE PERs

JON/Finding:
ER & HE PERs – Issues with Emergency Response and Health Effects identified during various Tank Farm Contractor Assessments.

Corrective Actions Reviewed:

7-1493
Event Response and Health Effects PERs, TF-AOP-006 and TF-AOP-011 procedures lack guidance in responding to an unknown High Radiation Area.

7-1494
Event Response and Health Effects PERs, Training is required for the ERO personnel and affected organizations on Lessons Learned and resultant procedure changes.

7-1495
Event Response and Health Effects PERs, As a result of the Emergency Management S-102 Event Response Review, Emergency Management is to review the Event response with Fluor Hanford (FH) Emergency Management for site applicability/Lessons Learned and incorporate any resultant changes into subsequent Emergency Management training.

7-1496
Event Response and Health Effects PERs, Timely response was delayed while necessary re-entry plans were developed and approved. Evaluate/develop pre-planned and approved re-entry, investigative and habitability surveys for and with both IH and HPT involvement.

7-1497
Event Response and Health Effects PERs, As a result of the Emergency Management S-102 Event Response Review, the current IH support for shift manning, IH Hazard Assessor support for event response and IH knowledge of the Incident Command system should be evaluated. Determine best practices and integration with HPT response for future events.

7-1498
Event Response and Health Effects PERs, When the Event Coordination Team (ECT) "page" was initiated at the Federal Building Emergency Operations Center (EOC), the page notification did not reach the CH2M HILL Technical Support personnel as expected. There is not a current CH2M HILL process to maintain the ECT response page list current for CH2M HILL contractor representative and technical representative personnel.

7-1500
Event Response and Health Effects PERs, As a result of the Emergency Management S-102 Event Response Review a significant delay was found in sending out the initial "pager" notification for an "abnormal event" per TFC-OPS-OPER-D-01, Event Notification matrix until additional resources were available in the WFO Shift Office. Given the new "pager" system implemented, this process should be simplified to aid the Shift Manager.

7-1501
Event Response and Health Effects PERs, As result of the Emergency Management S-102 Event Response Review, it was found that during the S-102 High Radiation Area event (HRA), personnel were brought in to provide access to the Single shell tank farm surveillance cameras in an effort to observe S-102 for indications of the source of the HRA. At the time, the WFO Shift Manager did not have access.

7-1503
Event Response and Health Effects PERs, As a result of the Emergency Management S-102 Event Response Review, the focus was primarily on TF-AOP-006 and TF-AOP-011 Abnormal Response procedures. The lessons learned of this event should be reviewed against all of the TF-AOP's for any required changes. In addition, the current AOP's and their approach should be compared against best practices by other facilities and industry.

7-1525
Event Response and Health Effects PERs, In the S-102 Health Effects Investigation, there was a need to quickly identify potentially affected individuals. The management survey conducted was not timely and was initially inaccurate which required substantial rework. This survey was conducted for an event that occurred on a normal day off. This would have been further complicated if performed for a normal work day.

7-1815
Event Response and Health Effects PERs, Additional Collection of Data: Toxicologists and Medical Experts recommend collection of additional environmental and field samples to aid in the future analysis of worker health effects. Increase of the level of industrial hygiene monitoring and surveillance for post-event dose reconstruction.

Documents Reviewed:

- TF-AOP-006, *Response to High Radiation, rev c-5*
- TFC-OPS-EP-D-04, *Emergency Management Program Assessment Plan Guidance*
- TFC-ENG-DESIGN-C-36, *Hazards Assessment Consequence Calculation Process*
- FY2008-CH2M-I-0007, *Corrective Action Plan Implementation for Tank 241-S-102 Waste Spill End Point Assessment*
- FY2008-CH2M-I-0003, *S-102 Midpoint Assessment*
- DOE Order 151.1C, *Comprehensive Emergency Management System*
- DOE G 151.1-2, *Technical Planning Basis*
- Training Activity TO7043 - *IH Role in Abnormal Events*
- Training Activity TA-07041 - *Job Hazard Analysis Process*
- Training Activity TA-08041- *EM - Identification of Exposed Personnel*
- Training Activity TO801 8 - *Case Manager Coordination w/AMH*
- Training Activity TO7044 - *Tank Farm Vapor Information Sheet*
- Training Activity TO8028 - *IH Sampling for Waste Transfer/Retrieval for Potential Abnormal Events*
- Training Activity - *Dose Reconstruction IH Sampling for Waste Transfer Abnormal Events*
- Training Course 3571 03 - *Cycle 3 Industrial Health Technician Continuing Training*

- TF-AOP-003, *Response to Elevated Airborne Radioactivity, Rev.* B- 7
- TF-AOP-0 11, *Response to Chemical and/or Radiological Events, Rev. C-1*
- TF-AOP-015, *Response to Reported Odors or Unexpected Changes to Vapor Conditions, Rev. B-18*
- TF-AOP-018, *Response to Electrical, Water, Air, or Pressurized Gas Cylinders High Energy Release, Rev.* B-2
- TFC-ESHQ-S-CMLI-C-0 1, *Injury and Illness Recordkeeping, Rev. C-2*
- TFC-ESHQ-S - CMLI-C-02, *Injury and Illness Events, Rev.* B-2
- TFC-ESHQ-S CMLI-CD-03, *Workers Compensation Program, Rev. C*
- TFC-OPS-OPER-CD-01, *Event Notification, Rev. A*
- TFC-ESHQ-S IH-C-46, *IH Reporting and Records Management, Rev. B-1*
- Standing Order CO-07-009, *Industrial Hygiene Dose Reconstruction Sampling for Waste Transfer and Retrievals*
- Standing Order WFO-07-006, *Industrial Hygiene Dose Reconstruction Sampling for Waste Transfer and Retrievals*
- *Shift Office On-Call List,* RPP-IP-0732, release 135

Activities/Operations Observed:

- April 7, 2009 AP Tank Farm High Efficiency Particulate (HEPA) Filter Failure Drill
- April 7, 2009 Radiological Waste Container Handling Accident Drill
- April 16, 2009 Emergency Preparedness C-110 Tabletop Drill

Interviews:

- IH Technician (2)
- Electrician (3)
- Nuclear Chemical Operator (2)
- Manager, IH Programs
- Manager, Training
- Manager, Security & Emergency Services/Events Investigation
- Manager, Shift Operations
- Manager, Senior Shift
- Coordinator, Emergency Preparedness
- DOE Facility Representative, ORP
- HAMTEC Safety Representative

Results:

The effectiveness review for ER & HE PERS included reviewing the eleven corrective actions (CA), select aspects of their closure documentation, how the CAs were implemented, and if the corrective actions will be effective in preventing recurrence of the deficiencies identified in these PERs.

TF-AOP-006 and TF-AOP-011 procedures were modified to provide more guidance in responding to an unknown High Radiation Area. All other TF-AOP's were reviewed and updated to reflect lessons learned of this event. The ERO personnel and affected organizations (in-house and Site-wide) were trained on Lessons Learned and the resulting procedure changes. There were significant issues pager notification and personnel call in processes for this event. There was an overall effort to improve IH and HPT response to tank waste spills. This included pre-planned and approved re-entry investigative and habitability surveys, IH support for shift manning, IH Hazard Assessor support for event response, and IH knowledge of the Incident Command system. Some potentially affected individuals were not quickly identified and there was need for additional environmental and field samples to aid in the future analysis of worker health effects. Both the updated and current procedures were reviewed. The procedure changes, training rosters, and class materials were reviewed. Also the results of the drills and personnel interviews verified the changes and training was effective.

Conclusions:

The document review and interviews have shown that the corrective actions tasks associated with the TF contractor, AdvanceMed Hanford (AMH) and the Fluor Hanford (FH) Emergency Preparedness organizations supporting this Finding were complete, effective and sustainable.

Rating:

Effective

Recommendation for Completion:

None

Suggestions for Continued Improvement:

None

Reviewer:

Jack George, DOE-RL, Facility Representative, Program Manager
Courtney Blanchard, DOE-ORP, Facility Representative

Corrective Action Evaluation Form
DOE ORP SA: ALL

JON/Finding: DOE ORP Self Assessment - All

Corrective Actions Reviewed:

DOE SA-1
Conduct an HPI investigation into the ORP response to the S-102 event.

DOE SA-2
Provide a detailed briefing to all Tank Farm FRs on expectations and requirements for contractor event evaluation and reporting, including: management's direction to designate senior staff as the acting TOD Director in the absence of the TOD Director, EM notification requirements and expectations for notification to ORP senior management, maintaining knowledge of work activities planned on backshift and weekends, ensure sufficient information is provided by the contractor during event notifications, and clarify expectations for event follow-up.

DOE SA-3
TOD Director will assign senior, experienced TOD staff as Acting Director of TOD in the absence of the TOD Director (once the HPI review is completed, a formal corrective action will be defined and implemented as determined necessary by the HPI review).

DOE SA-4
Develop corrective action plan for the HPI review once the review is completed.

DOE SA-5
Obtain contractor engineering resources to support the TED so that mission critical SSCs can be included in the review and oversight process.

DOE SA-6
Conduct a joint, DOE/contractor evaluation of the TFC's engineering organization, process, and procedures, including subcontractors, and include a review of the design/design review process for mission critical SSCs as well as safety-related SSCs.

DOE SA-7
In coordination with the TFC, develop a clear, concise definition of "physically connected" in the DSA for the tanks farms, and approve the contractor-submitted safety basis amendment.

DOE SA-8
Revise the FRIs to provide detailed guidance and direction to on-call FRs for evaluating event notifications, including: management's direction to designate senior staff as the acting TOD Director in the absence of the TOD Director, EM notification requirements and expectations for notification to ORP senior management, maintaining knowledge of work activities planned on backshift and weekends, ensure sufficient information is provided by the contractor during event notifications, abnormal event criteria, conservative decision making, and clarify expectations for event follow-up.

DOE SA-9
Revise the Tank Farm FR qualification cards to require an oral interview with the TOD Director on management expectations for the on-call FR, including FRI-specific requirements and guidance.

DOE SA-10
Develop an interim resource point of contact list to summarize (and make available to the person acting) contact information for event response resources and notification requirements.

DOE SA-11
Develop a desk instruction or other formal means to summarize (and make available to the person acting) contact information for event response resources and notification requirements, including management expectations for conservative decision-making, event action levels (or notification thresholds), and notifications to outside agencies (including DOE-HQ, Washington State Departments of Health and Ecology, etc.)

Documents Reviewed:

- 7-TF-018, Office of River Protection Investigation of ORP Actions related to the Tank S-102 Waste Spill (Pfaff Report)
- Human Performance Improvement Review of the DOE Response to Tank S-102 Tank Waste Spill
- U.S. Department of Energy (DOE), Office of River Protection (ORP) Corrective Action Plan (CAP) in Response to Self-Assessments of DOE Response to the S-102 Tank Waste Spill on July 27,2007
- Assessment of ORP TF Oversight, (Gibbs Report)
- HNF-SD-WM-TSR-006, Rev. 6-A, Definitions
- ORP M 151.1, Revision 0, DOE ORP Event Notification Procedure
- Weekly ORP Weekend Senior Management Availability List, 4/18/2009
- Engineering Design Program Review, September 2007
- FRI-006, Revision 6, ORP Facility Representative Instruction Facility Representative Responsibilities and Routine Activities
- ORP Facility Representative Functional Area Qualification Record and Facility Specific Qualification Standard and Record, Revision 6
- ORP FY2008 Assessment Schedule

Activities/Operations Observed:

None

Interviews:

- WRPS - Chief Engineer
- DOE-ORP - Tank Farm Operations, Director
- DOE-ORP - ESQ, Assistant Manager
- DOE-ORP, Facility Representatives (2)

Results:

The HPI investigation from SA-1 was reviewed and found to adequately assess organizational weaknesses at ORP that contributed to the event. A corrective action plan was developed per SA-4 and considered effectively executed.

Interviews with ORP Facility Representatives indicated that the contents of the detailed briefing regarding the expected actions for event notification as stated in SA-2 were clear and provided the necessary detail to respond to future events.

SA-3 established an expectation that the TOD director would delegate authority to only senior, experienced TOD staff as the acting director.

The Chief Engineer for WPRS was interviewed regarding contractor engineering staffing as stated in SA-5. At the time of the S-102 event, CH2MHILL had 113 of 126 positions filled. When questioned about the adequacy of current staffing, he stated that their most critical shortage had been the lack of any HVAC engineering staff due to a retirement. WPRS has hired a new HVAC engineer, and has also hired four "rotational engineers" who are hired as entry-level engineers that rotate through the various engineering groups in order to develop them for positions of higher responsibility. He stated that WRPS would also be hiring eight additional engineers as part of the Recovery Act surge. These are intended to be more experienced than the "rotational engineers," but will also rotate as they finish projects rather than according to a fixed time schedule.

The joint evaluation of the TFC engineering organization documented in Engineering Design Program Review, September 2007, called for in SA-6 was reviewed and determined to accurately assess the health of the organization. Meaningful recommendations were made and current conditions indicate that WRPS is continuing to pursue acquiring the needed staff to support operations.

SA-7 called for a revised definition of "physically connected" in the tank farm safety basis document. The TSR document was reviewed and found to contain adequate language to clarify the term.

FRI-006, Revision 6, ORP Facility Representative Instruction Facility Representative Responsibilities and Routine Activities was reviewed and found to contain adequate direction in regard to event response and notification as identified in SA-8. The FR qualification card revision was also reviewed and found to contain supporting oral interviews to reinforce that expectation as specified in SA-9.

Weekly Management Availability e-mails have been implemented which are distributed to key personnel and provide contact information should an event occur as stated in SA-10.

ORP M 151.1, Revision 0, DOE ORP Event Notification Procedure was written to provide the means to convey duties and responsibilities for DOE personnel for event response such that personnel acting on behalf of others are aware of the expectations as stated in SA-11.

Conclusions:

Actions taken in regard to the DOE ORP self-assessment have been effective.

Rating:

Effective

Recommendation for Completion:

None

Suggestions for Continued Improvement:

None

Reviewer:

Roger Claycomb, DOE-ID, Nuclear Safety and Performance Division

Corrective Action Evaluation Form
EM-62 OP.1 F-1

JON/Finding:
EM-62 OP.1 F-1, The Tank Farm Contractor Conduct of Operations Safety Management Program Owner does not assess implementation of all DOE Order 5480.19 Attachment 1 Chapters.

Corrective Actions Reviewed:

OP.1 F-1 CA.1
Conduct a Management Observation Program (MOP) assessment of the implementation of the assessment requirements outlined in TFC-PLN-32 and provide results to the SMP owners.

OP.1 F-1 CA.2
Conduct interviews with SMP owners to confirm that program health assessment frequency requirements of TFC-PLN-32 are effectively understood.

OP.1 F-1 CA.2(a)(1)
Complete a review of the Conduct of Operations Program to assess compliance with DOE Order 5480.19 and TFC-PLN-32.

OP.1 F-1 CA.2(a)(2)
Add a Management Assessment to the FY09 Assessment Schedule to perform a Conduct of Operations Management Assessment to include Chapters 2, 5, 13, 14, and 16 of DOE Order 5480.19 listed in the Conduct of Operations matrix.

OP.1 F-1 CA.2(b, c)
Perform a management observation (MOP) of the SMP assessment schedules and completion rates.

OP.1 F-1 CA.2(c. d)
Revise FTC-PLN-32 to require a periodic assessment of the SMP process, including owner knowledge and completion of required assessments.

OP.1 F-1 CA.2(d)
Provide training to Safety Management Program (SMP) owners on their roles and responsibilities as discussed in TFC-PLN-32.

Documents Reviewed:

- MOP-08-08-03, *Corrective Action (PER-2008-0989, E-STARS Task CH2M-PER-2008-0989.2)*
- Interoffice Memorandum 7J000-08-RLH-010, dated June 20, 2008, *Safety Management Program Assessments*

- FY2008-CH2M-I-0002, Independent Assessment of Waste Feed Operations: Waste Transfer Operations Management Systems, dated December 10, 2007 – January 31, 2008
- TFC-PLN-05, *Conduct of Operations Implementation Plan*, Rev C-5
- TFC-PLN-10, *Assessment Program Plan*, Rev E
- TFC-PLN-32, *Tank Operations Contractor Safety Management Programs*, Rev B-20
- TFC-PLN-100, *Tank Operations Contractor Requirements Basis Document*, Rev A
- TFC-ESHQ-AP-C-01, *Management Assessment*, Rev E-6
- August 2008, Conduct of Operations Safety Management Program presentation to the Executive Safety Review Board
- FY2009 WRPS Integrated Assessment Schedule, Rev 4, dated February 25, 2009
- FY2009 WRPS Integrated Assessment Schedule, Rev 6, dated April 14, 2009
- Safety Management Program briefing materials from December 9, 2008 and associated course completion rosters
- Conduct of Operations Management Assessment FY2008-OPS-M-0120

Activities/Operations Observed:

- Conduct of Operations Sensitivity Training provided by C Farm Retrieval and Closure Manager
- Conduct of Operations Council Meeting

Interviews:

- Base Operations, Operations Manager
- Industrial Hygiene Manager
- Procedures Manager
- Quality Assurance Engineer
- Shift Operations Manager
- Training Manager

Results:

A Management Observation Program (MOP) assessment of the implementation of the assessment requirements in TFC-PLN-32, including assessment schedules and completion rates, was conducted, and results reviewed with Safety Management Program (SMP) managers. A MOP assessment of SMP manager knowledge of type, purpose, and frequency of TFC-PLN-32 SMP assessments was also conducted. Additionally, training was provided to the SMP managers in December 2008, on their roles and responsibilities as defined in TFC-PLN-32. The assessor validated SMP manager knowledge through the interview process. Finally, a revision to TFC-PLN-32 to periodically assess SMP manager knowledge and completion of assessments required by the plan through a MOP activity was also verified to have been completed.

A Conduct of Operations assessment was conducted in August 2008, with the results being presented to the Executive Safety Review Board. Overall program health was graded as "good," eleven chapters were also evaluated as "good," five chapters as "marginal," one chapter

(Equipment and Piping Labeling) as "poor," and one chapter as "not applicable." Trends from a previous assessment were also provided.

Management assessments were added to the FY2009 WRPS Integrated Assessment Schedule for DOE 5480.19, Attachment I Chapters II and V for June 2009, and Chapters XIII, XIV, and XVI for August 2009. Discussions with the Shift Operations Manager indicated all of the previously identified chapters, including Chapter IX were currently being assessed. He further intends to assess all remaining chapters of Attachment I in May to support certification for Phase II of Integrated Safety Management. At that point, an evaluation will be made to redistribute future assessments to be consistent with both TFC-PLN-05 and TFC-PLN-32 periodicity requirements.

Conclusions:

The evidence files appeared complete and auditable. The corrective actions put in place appear to have been effective in correcting deficient conditions identified, and processes have been put in place to periodically review effectiveness on an ongoing basis. In addition, activities currently in progress to verify readiness for Integrated Safety Management Phase II declaration have accelerated some of the assessment activities. Because both programs (Conduct of Operations and Safety Management Programs) are assessed biennially, and in some cases triennially, sustained effectiveness must be evaluated over some time.

Rating:

Effective

Recommendation for Completion:

None

Suggestions for Continued Improvement:

None

Reviewer:

Kerry Schierman, DOE-RL, Facility Representative

Corrective Action Evaluation Form
EM-62 CA.1 F-2

JON/Finding:
ORP verification of contractor corrective actions for the S-102 CAP has not been adequately performed.

All corrective actions were reviewed

Documents Reviewed:

- Type A Accident Investigation Report, The July 27, 2007 Tank 241-S-102 Waste Spill at the Hanford Tank Farms
- Corrective Action Plan for Type A Accident Investigation Report
- FY2008-CH2M-1-0003, CH2M HILL Hanford Group, Inc. Independent Assessment of Corrective Action Plan Implementation for Tank 241-S-102 Waste Spill Investigation and Analysis Reports Midpoint Assessment
- FY2008-CH2M-I-0007, Corrective Action Plan Implementation for Tank 241-S-102 Waste Spill End Point Assessment
- Human Performance Improvement Review of the DOE Response to Tank S-102 Tank Waste Spill
- Assessment of ORP TF Oversight, (Gibbs Report)
- Letter of Direction to CH2M Hill and AMTF
- Integrated Assessment Program, ESQ-OA-IP-01 R1

Activities/Operations Observed:

None

Interviews:

- DOE- ORP Quality Assurance
- DOE-ORP Tank Farms Facility Representative
- WRPS Quality Assurance Manager Engineer (support services contractor)
- Director, Tank Farm Operations Division, DOE-ORP

Results:

The S-102 Corrective Action Plan (CAP) verification plan was revised based on recommendations from EM-62 as well as ORP internal comments. Additional expectations were incorporated for planning of verification and closure activities.

Corrective action # CA-2 stated, "Brief affected DOE personnel on the revised S-102 CAP Verification Plan to ensure requirements and expectations are clearly understood." Closure of this action was completed based on reviews by ORP and support staff. However, the attendance

roster or materials for these briefings cannot be located. Based on interviews and independent reviews of the roster and briefing materials all indications point to an acceptable closure.

S-102 verified closure packages were reviewed by ORP management and placed into the IDMS. This shows review of verification packages is complete and shows proper execution.

The S-102 effectiveness verification assessment (of which this form and subsequent report is a part) will close this particular action prior to resumption of retrieval operations at C-109.

Integrated Assessment Program, ESQ-OA-IP-01 R1 issued 1/21/2009 was revised to limit corrective action verification closure to federal staff (DOE support contractors may assist with verification, but federal staff must review and accept closure). 6.2.9 assigns closure verification responsibility to federal SMEs or the assessment team leader. This revision to the assessment instruction adequately addresses this issue.

Conclusions:

Review of the S-102 CAP and subsequent changes to that CAP and the associated documentation, shows comprehensive verification activities performed by ORP management and staff. These additional verification activities adequately address the issues raised by EM-62 in their review of ORP verification activities.

Rating:

Effective

Recommendation for Completion:

None

Suggestions for Continued Improvement:

None

Reviewer:

Greg Hayward, DOE-ID, Nuclear Safety and Performance Division

Corrective Action Evaluation Form
EM-62 OP.1 F-2

JON/Finding:

EM-62 OP.1 F-2, Shift Managers demonstrated less than adequate familiarity with Technical Safety Requirements (TSR) modes of operations and how to implement TSR Required Actions.

Corrective Actions Reviewed:

CA.1
Perform evaluation and changes to TSR-006, Section 1.6, to update or remove the SST MODES to address related issues identified in this PER.

CA.2
Complete updates of necessary implementing procedures to related to the NS&L changes to TSR-006, Section 1.6, in action #1 of this PER to support management expectations on effective documentation of MODE changes.

CA.3
Complete briefing to all OE/SM qualified personnel on issues in this PER as well as management expectations on demonstrating TSR compliance.

CA.4
Complete management observation to confirm continued effective understanding of management expectations from action #3 as well as effective knowledge related to actions #1 and #2

CA.5
Revise the ORP Integrated Assessment Schedule for the ORP Tank Farm Facility Representatives to evaluate contractor Nuclear Chemical Operator, Operation Engineer, and Shift Manager safety basis level of knowledge on a quarterly basis when conducting TSR Implementation surveillances.

(a.1)1 Complete Management Expectations Training on Demonstrating TSR Compliance (CH2M-PER-2008-0960 & CH2M-PER-2008-0992).

(a.1)2 Complete Documented Safety Analysis (DSA) and TSRs Overview Training Briefings for designated operations and engineering personnel.

(a.1,2) WRPS issued Management Control Plan for Tank Farms Operational Turnover (29633-PM-PLN-0001) on 9/11/08 to define roles and responsibilities at transition to ensure safe and effective operation of the Hanford Tank Farms under the Tank Operations Contract. Per the MCP, mentoring and feedback is provided (Base Operations and SST Retrieval/Closure) on management expectations through the use of the Hazard Review Board (HRB) and Senior Supervisory Watch (SSW). HRB and SSW programs have identified areas for improvement.

(c) Schedule performance-based assessments of the Shift Manager TSR knowledge and ability to use them.

(a,2)(c)Conduct a performance-based evaluation of the effectiveness of TSR knowledge and compliance elements of the Shift Manager initial qualification, re-qualification, and continuing training programs.

(b) Verify that all (100%) OE/SM qualified personnel have been briefed on issues in CH2M-PER-2008-0960, as well as management expectations on demonstrating TSR compliance.

Documents Reviewed:

- HNF-SD-WM-TSR-006; Tank Farm Technical Safety Requirements
- RPP-13033; Tank Farm Documented Safety Analysis
- CH2M-PER-2008-0992
- CH2M-PER-2008-0960
- CH2M-PER-2008-0992 Corrective Actions and Deliverables
- CH2M-PER-2008-0960 Corrective Actions and Deliverables
- Presentation Materials Documenting Safety Basis Amendment 051
- TFC-OPS-OPER-C-01; Technical Safety Requirement Compliance
- Operational Awareness Database Item 4853, Interview of Shift Manager, 11/26/08
- Course Number 350929; Self-Study Guide for TFC Technical Safety Requirements
- Shift Manager Operational Logbook
- Tank Farm Abnormal Operating Procedure 3; Response to Elevated Airborne Radioactivity
- Tank Farm Abnormal Operating Procedure 21; Response to Tank Farm Ventilation Upset

Activities/Operations Observed:

- Observed Shift Manager Perform Duties

Interviews:

- Operations Shift Manager
- Operations Organization Manager
- Shift Managers
- Training Specialists
- Tank Operations Division Director

Results:

The issue of retention of knowledge of Safety Basis requirements was addressed via initial training conducted after the S-102 event. The training's effectiveness was periodically checked by Facility Representatives in the Tank Operations Division with varying results.

The assessors reviewed Operational Awareness Database entries and interviewed individuals to determine the effectiveness of the safety basis training. Emergency Response Evaluation reports were reviewed, but showed that the emergencies scenarios were selected to follow the Abnormal Operating Procedures and Emergency Response Procedures vice the TSRs. For instance, the scenario that evaluated the response to an elevated flammable gas level in a waste tank provided that the level was at 18 percent LFL, below the 25 percent required to ender the Limiting Condition for Operation.

An interview with the Tank Operations Division Director gleaned that Facility Representatives were performing knowledge checks on the Shift Managers on a periodic basis. The assessor's review of Facility Representative interviews have shown few isolated weaknesses were detected during these interviews. The Facility Representative reviews covered various TSR subjects, including administrative locks and administrative controls. An excerpt from a typical Facility Representative entry is as follows:

> "The FR interviewed a SM regarding his knowledge of the Nuclear Safety Basis. We discussed various aspects of waste transfers. We discussed various safety basis requirements for waste transfers and where/how they apply. Specifically, we discussed leak detectors and their surveillance requirements, requirements and basis for material balances, what is a MBD, and what to do if it is exceeded. We also discussed requirement for pit covers, double valve isolation, back flow preventers, and DST ventilation including surveillance requirements. He was knowledgeable of all these topics. He was also knowledgeable of the difference between General Service, Safety Significant, and Safety Class, and knew that we have no Safety Class SSCs in tank farms. He was also knowledgeable of the current commercial grade dedication issue with MCS and its associated red arrow entry. I was pleased with this SM's knowledge of the Safety Basis. No deficiencies were identified. This surveillance satisfies this month's EM-62 surveillance requirement for evaluating a SM for Safety Basis knowledge."

The assessor identified that Tank Farm Contractor TSRs training had been developed and provided to Shift Mangers. Twenty-nine of the thirty-four individuals slated for the course have attended this training, which consisted of a four-hour training session followed by a written exercise/assignment to be completed at the conclusion of the training session. At the culmination of the training and completion of the assignment, each Shift Manager is to sit through an oral board with the Operations Shift Manager and Operations Organization Manager. Once the Shift Managers are trained and pass their boards, the plan is to include the Operating Engineers on the next round of training and examination. The assessor noted that there is no plan for continued training to promote retention of knowledge.

The assessor conducted interviews to determine retention of knowledge from the TSR training materials. The knowledge check indicated an adequate level of knowledge from the Operations Shift Manager and the Operations Organization Shift Manager. The Shift Manager interview discussed several TSR issues directly related to the S-102 event, such as, changes to HNF-SD-WM-TSR-006; *Tank Farm Technical Safety Requirements and* RPP-13033; *Tank Farm Documented Safety Analysis,* concepts of physical connection and disconnection, modes of operation, evaluation of ancillary equipment that could cause leaks during a waste transfer, miscellaneous equipment at tank farms prohibited from operation, accident scenarios, entering Abnormal Operating Procedures and several work control and hazard analysis. The Shift Manager displayed a weak understanding of where to locate information in the Documented Safety Analysis, and tended to rely on operational procedures to screen Tank Farm activities, some of which were clearly unauthorized by the TSRs. Overall the level of knowledge of the Shift Manager was adequate, and given the use of the TSRs, he was able to satisfactorily answer most questions. Of note, the individual had recently attended the Tank Farm Contractor Technical Safety Requirement training that was being administered to the Shift Manager crews.

Conclusions:

Training efforts since the S-102 event have been ongoing. The level of knowledge of the Shift Managers is adequate. Due to the technical nature of the material, and to promote retention, the training should be continued at a certain periodicity as determined by knowledge checks.

Rating:

Effective

Recommendation for Completion:

None

Suggestions for Continued Improvement:

S-EM-62 OP.1 F-2-1
The Tank Operations Contractor should incorporate continuing training on Technical Safety Requirements for Shift Managers; training should include the basis for each TSR, and information from the DSA including relevant accident scenarios and unmitigated consequences.

Reviewer:

Ron Ciola, DOE-ORP, Facility Representative

Corrective Action Evaluation Form
EM-62 OP.1 F-4

JON/Finding:
EM-62 OP.1 F-4, TFC-OPS-OPER-C-13, *Technical Procedure Control and Use*, allows for procedure writers to incorporate changes resulting from field validation without subsequent USQ evaluation.

Corrective Actions Reviewed:

CA.1
Revise procedure TFC-OPS-OPER-C-13 to delete paragraph 4.4.24, which allows for procedure changes when a procedure has already been processed during the construction or modification of a system that has not been field validated (and issued a LL Bulletin).

Documents Reviewed:

- Just In Time, RPP Lessons Learned No. 07-042, *Approval of USQ Evaluations Must Reflect Final Documentation*
- TFC-OPS-OPER-C-13, *Technical Procedure Control and Use*
- CH2M-PER-2008-0995 and Barrier Analysis
- FY2008-CH2M-1-0003, *CH2M HILL Hanford Group, Inc., Independent Assessment of Corrective Action Plan Implementation for Tank 241-S-102 Waste Spill Investigation and Analysis Reports – Midpoint Assessment*
- CH2M-PER-2008-0703
- Administrative Document Change Authorization for TFC-OPS-OPER-C-13/F8, *Technical Procedure Control and Use*
- *Engineering Required Reading (RR-07-041/2838)- Assigned to the USQ Evaluators*

Activities/Operations Observed:

None

Interviews:

WRPS Lessons Learned Coordinator

Results:

Problem Evaluation Request CH2M-PER-2008-0995 initiated a corrective action to remove Paragraph 4.4.26 [4.4.24 is a typo] from procedure TFC-OPS-OPER-C-13, *Technical Procedure Control and Use*, to address Finding OP.1 F-4. However, the corrective action to remove paragraph 4.4.26 was first initiated by CH2M-PER-2008-0703, due to CH2M Hill's FY2008-CH2M-1-0003 Independent Assessment finding MPA-04. The proposed procedure change was documented in the Administrative Document Change Authorization for TFC-OPS-OPER-C-13/F8, *Technical Procedure Control and Use* and CH2M-PER-2008-0703 (but not CH2M-PER-

2008-0995). Neither PER identified the other for the same corrective action. Nonetheless, the procedure was appropriately revised and contains adequate requirements for ensuring that an Unreviewed Safety Question evaluation is completed for procedure changes.

The Just In Time Lessons Learned, No. 07-042, *Approval of USQ Evaluations Must Reflect Final Documentation*, contained useful information, but it is questionable to take credit for it as a corrective action since it was issued prior to Finding OP.1 F-4. Engineering personnel reviewed the Lessons Learned as required reading.

Conclusions:

The evidence files did not provide a clear record for how procedure TFC-OPS-OPER-C-13 was revised. A review of the IDMS procedure history files was required to determine how the procedure was revised. The Lessons Learned provided useful information; but was not issued in response to the finding. Despite these issues, the corrective action for removing paragraph 4.4.26 was effective.

Rating:

Effective

Recommendation for Completion:

None

Suggestions for Continued Improvement:

None

Reviewer:

Joe Sondag, DOE-ORP Facility Representative

Corrective Action Evaluation Form
EM-62 OP.1 SO-1

JON/Finding:
EM-62 OP.1 SO-1, The Work Release Meeting is not effective at scheduling or communicating the status of work.

Corrective Actions Reviewed:

(a) 1
WRPS issued Management Control Plan for Tank Farms Operational Turnover (29633-PM-PLN-0001) on 9/11/08 to define roles and responsibilities at transition and addresses all operations issues identified during due diligence reviews.

(a) 2
TFC-OPS-MAINT-C-01, Tank Operations Contractor Work Control, Section 4.11.1, defines the process for developing a Daily Release Sheet/Status. The status of planned/on-going work is communicated regularly via the Base Operations conference call, operations turnover, and Plan of the Day meetings. Review of HRB documentation and SSW MOPs indicate this as an effective method of scheduling and communicating.

Documents Reviewed:

- Hanford Site River Protection (CH2M HILL Hanford Group, Inc.) EM-62 Assessment Report, March 2008
- PER 08-0341.7
- PER 08-0997
- PER 08 0341.7 Corrective Actions and Deliverables
- PER 08-0997 Corrective Actions and Deliverables
- Shift Manager Operational Logbook
- Tank Farm Abnormal Operating Procedure 3; Response to Elevated Airborne Radioactivity
- Tank Farm Abnormal Operating Procedure 21; Response to Tank Farm Ventilation Upset

Activities/Operations Observed:

- Contractor Plan of the Day Meetings
- Contractor Plan of the Day Meetings
- Contractor Morning Status Meetings
- Contractor Daily Release Sheet Meetings
- TFC-09-0439; Install new Drain Seal Assemblies in AZ-101/102A Pit
- WFO-WO-05-002807; Replace Chiller AZ-CW-R-1
- TFC-09-1566-242A HVAC; HMI Loss of Power Alarm Troubleshooting Package
- WFO-07-3186; 241-AN; Repair Lighting and Replace Disconnects

- TFC-09-1519; 242-A, Dynamic Test Raw Water Pressure Control Valves
- Table Top Drill of Retrieval Operations Emergency Procedures

Interviews:

- Operations Shift Manager
- Operations Organization Manager
- Shift Managers
- Training Specialists
- Tank Operations Division Director

Results:

As documented by the EM-62 review report (Hanford Site River Protection (CH2M HILL Hanford Group, Inc.) EM-62 Assessment Report, March 2008), the EM-62 assessment team members attended work release meetings on three days to evaluate the work release process and identify which activities to observe that day. On five occasions, EM-62 team members attempted to observe work that was discussed during the meeting only to find that the work was not going to be performed for a variety of reasons. It was not clear to the EM-62 assessment team members why work would be listed and discussed at the meeting if it was not going to be worked as scheduled. The EM-62 assessment team determined that this was a poor practice and brought into question the effectiveness of the tank farm contractor's work planning and status processes.

Since the EM-62's finding, the Tank Farms Operations Contractor has somewhat revised it's approach to work planning and work status. In addition to the Daily Release Sheet meetings and Plan of the Day meetings held at both Tank Farms Double Shell Tanks and Closure Operations areas, there is now a Morning Status Meeting held in each of these respective areas. The schedule of the work planning, release and status meetings is as follows: At 6:45 the Daily Release Sheet Meetings are held. These meetings Review the Daily Report and the Daily Release Sheet. The First Line Supervisors discuss the Daily Release Sheet work items, and resources are confirmed to be committed to the work. A time and place for a prejob brief is scheduled if not already on the release sheet. The Planning and Engineering organizations are also there to support the work discussions.

The second round of meetings each morning is held immediately after the Daily Release Sheet Meeting. The 7:15 morning status meetings allow the Facility Managers to provide status on their facility activities. This meeting usually lasts until 7:45 or 8 AM. Finally, there are Plan of the Day meetings held at 2:30 PM each day to communicate the status of work from the first line supervisors to the schedulers, who are preparing the next day's release sheet.

During the current assessment, the team members attended these daily meetings. Although good information was put out at the meetings, similar problems to those cited by EM-62 continue (in that work execution problems exist). That is, a large portion of work slated for completion during the morning's Daily Work Release meeting did not occur that day. Examples include work performed in the AZ farm to replace the drain plugs in pits. Although TFC-09-0439,

Install new Drain Seal Assemblies in AZ-101/102A Pit, work was briefed and started on time, incorrect plug sizes prevented the plugs from being installed. The Field Work Supervisor appropriately stopped the job since the procedure did not allow them to back out once the problem was detected.

An electrical job in the AN farm, WFO-07-3186, *241-AN, Repair Lighting and Replace Disconnects,* was also cancelled because worker qualifications did not support the work as equipment operator qualifications were not found on file.

The test of raw water control valves, TFC-09-1519, *242-A, Dynamic Test Raw Water Pressure Control Valves*, was cancelled because the work document needed a change. The job was expected to work within an hour (9 AM). It ended up working about 12 hours later.

The assessors also observed work where the job had to be stopped due to an inadequate Troubleshooting Plan. TFC-09-1566, *242A HVAC HMI Loss of Power Alarm Troubleshooting Package*, could not proceed past the first step. It appeared an adequate walk down had not been performed before the Troubleshooting Plan was prepared. As a result, the plan was not consistent with the equipment alignment in the field.

Note that the assessors also observed a job where the Troubleshooting Plan was workable, and was prepared in accordance with the requirements. It should be noted that the work replacing the AZ chiller unit, WFO-WO-05-002807; Replace Chiller AZ-CW-R-1 successfully proceeded within the bounds of the work control envelope, using first a Troubleshooting Plan and then a minor standing work document for Instrumentation Troubleshooting and Repair. This work was accomplished with minor delay.

After several failed attempts to observe work via the Daily Release Sheet meeting information, one assessment team member noted that the most successful way he was able to observe work in the field was to report to a shop area, where the workers would eventually lead them to a job being worked.

Conclusions:

Although the coordination of work has since been evaluated in the corrective actions for this finding, and status meetings have been incorporated into the daily routine -- the assessment team encountered similar problems as identified by the March, 2008 EM-62 report. EM-62 identified problems with work status which prevented work execution following the Daily Release Sheet Meeting. While one failed work item was in-line with EM-62's original observation, others problems the assessment team observed were associated with work execution and completion after a work crew entered the field, or due to improperly trained crew members. The work status was improved, but the execution remains lacking for a variety of reasons.

Rating:

Effective

Recommendation for Completion:

None

Suggestions for Continued Improvement:

S-EM-62 OP.1 SO-1-1
The TOC should reevaluate the process of planning, scheduling and releasing daily work items; the process should have checks in place to assure the packages are workable, resources are available, and the workers are trained.

Reviewer:

Lead, Ron Ciola, DOE-ORP, Facility Representative
Kerry Schierman, DOE-RL, Facility Representative
Joe Sondag, DOE-ORP, Facility Representative
Jack George, DOE-RL, Facility Representative Program Manager

washington river protection solutions | PO Box 850
Richland, WA 99352

June 10, 2009

WRPS-0901065 R1

Ms. S. L. Charboneau, Assistant Manager
Tank Farms Project
U.S. Department of Energy
Office of River Protection
Post Office Box 450
Richland, Washington 99352-0450

Dear Ms. Charboneau:

CONTRACT NO. DE-AC27-08RV14800 – WASHINGTON RIVER PROTECTION SOLUTIONS LLC RESPONSE TO THE U. S. DEPARTMENT OF ENERGY, OFFICE OF RIVER PROTECTION FINAL REPORT ON THE EFFECTIVENESS OF CORRECTIVE ACTIONS FOR THE TYPE A ACCIDENT INVESTIGATION OF THE HANFORD S-102 TANK WASTE SPILL

Reference: Letter, S. L. Charboneau, ORP, to J. M. Armstead, WRPS, "Contract No. DE-AC27-08RV14800 – U. S. Department of Energy, Office of River Protection (ORP) Final Report on the Effectiveness of Corrective Actions for the Type A Accident Investigation of the Hanford S-102 Tank Waste Spill," 09-TOD-030/0901065, dated May 15, 2009.

On May 13, 2009, the U. S. Department of Energy (DOE), Office of River Protection (ORP) transmitted the results of the final assessment report of the Effectiveness of Corrective Actions for the Type A Accident Investigation of the Hanford S-102 Tank Waste Spill (Reference).

The effectiveness assessment concluded that the corrective actions resulting from the Type A accident investigation were complete, and the assessment final report was approved by the ORP Manager on May 7, 2009. The assessment identified 26 opportunities for improvement. The ORP requested a formal response to address 14 of the 26 suggestions for continued improvement to include: 1) the plan (including specific actions planned) for implementing suggestions, 2) the dates when the specific actions will be completed and verified, and 3) the Problem Evaluation Request (PER) tracking number for each suggestion. As requested, the enclosed Corrective Action Plan addresses the identified 14 of the 26 suggestions for continued improvement.

The results of the review and corrective actions outlined in the enclosed CAP were discussed with Mr. R. J. Ciola of your staff.

Should you have any questions regarding the information provided, you may contact me at 372-9138, or your staff may contact Mr. R. E. Gregory on 373-5748.

Sincerely,

(Signature Attached)

William J. Johnson
President and Project Manager

BLM:POH

Enclosure: Corrective Action Plan - Assessment of the Effectiveness of Corrective Actions for the Type A Accident Investigation of the Hanford S-102 Tank Waste Spill (15 pages)

cc: ORP Correspondence Control
S. E Bechtol, ORP
R. J. Ciola, ORP
B. A. Harkins, ORP
S. C. Johnson, ORP
J. C. Poniatowski, ORP
H. N. Taylor, ORP

WRPS Correspondence Control
J. C. Allen-Floyd, WRPS
J. M. Armstead, WRPS
M. N. Brosee, WRPS
G. J. Johnson, WRPS
E. M. LaRock, WRPS
B. L. Mata, WRPS
N. J. Milliken, WRPS
S. M. Sax, WRPS
B. R. Thomas, WRPS

Electronically Approved by:

UserName: Johnson, William (h0094870)
Title: President and Project Manager
Date: Wednesday, 10 June 2009, 03:25 PM Pacific Daylight Time
Meaning: Sign as William J. Johnson

==========

FY2009 - WRPS Integrated Assessment Schedule

Organization	ID No.	Due	Completed	Team Lead	Title	Changed during schedule Rev#:
				September 2009		
BASE OPS						
Scheduled	FY2009-OPS-S-0307	9/30/2009		Morales, T	Emergency Management Program	Rev 0
ESHQ						
Rescheduled	FY2009-WRPS-I-0005	9/30/2009		Maciuca, T	Base Ops Management Systems	Rev 3
Scheduled	FY2009-ESHQ-M-0134	9/30/2009		McDonald, J	ISMS Phase 2	Rev 0
Added	FY2009-ESHQ-S-0355	9/14/2009		Maciuca, T	WRPS Lessons Learned Program Effectiveness	Rev 8
Scheduled	FY2009-ESHQ-S-0321	9/30/2009		Tuckness, D	Beryllium	Rev 0
Scheduled	FY2009-ESHQ-S-0333	9/30/2009		Brown, B	835.704 Administrative Records (Source Control) 835.1201 Sealed Radioactive Source Control (Triennial)	Rev 0
Added	FY2009-ESHQ-S-0354	9/30/2009		TBD	Work Performance for HRB-Type Reviewed Work	Rev 8
ORP						
scheduled		9/4/2009		C Christenson	222-S Fire Detection Sys. Upgrade Surveillance	
scheduled		9/15/2009		T Hoertkorn	Emergency Mgnt. DOE-HQ Surv. (DOE O 151.C)	
scheduled		9/16/2009		B Harkins	Phase I & II ISM Verification	
scheduled		9/18/2009		C Kemp	Tank Waste Ret.Workplan field compliance surv.	
scheduled		9/30/2009		S Charboneau	Safety/Tech Staff/Maint. Training Surv.	
scheduled		9/30/2009		B Harkins	Routine Surveillances (September)	
scheduled		9/30/2009		D Kemp	CH2M HILL Closeout Office Invoice Reviews	
scheduled		9/30/2009		G Trenchard	Monthly Cost/Scope/Technical Perf/EVMS Rvw Surv.	
scheduled		9/30/2009		J Armstrong	Rad Con Assessment	
scheduled		9/30/2009		M Moreno/TBD	Industrial Hygiene Assessment	
scheduled		9/30/2009		D Kemp	Monthly WRPS Invoice Review	
Project Review Board Evaluation						
Added		9/30/2009		Rickenbach, Mark D	Construction Functional Assist Evaluation – 6/29 – 7/16	Rev 5

CORRECTIVE ACTION PLAN

Assessment of the Effectiveness of Corrective Actions for the Type A Accident Investigation of the Hanford S-102 Tank Waste Spill

U. S. Department of Energy, Office of River Protection

Assessment Report

May 13, 2009

Prepared by:

Washington River Protection Solutions LLC
June 11, 2009

Table of Contents

1.0 Introduction 3
2.0 Corrective Action Methodology 4
3.0 Corrective Action Plan Structure 5
4.0 Review and Approval of WRPS Corrective Action Plan 5
5.0 Corrective Action Plan Reporting and Closure 5
6.0 Corrective Action Plan 5
6.1 S-HE-1-1 5
6.2 S-MS-1-3 6
6.3 S-WC-3-1 7
6.4 S-WC-3-3 8
6.5 S-WC-3-4 10
6.6 S-WC-4-1 10
6.7 S-WC-3-2, S-WC-4-2, and S-WC-4-3 11
6.8 S-WC-4-4 12
6.9 S-WC-4-7 13
6.10 S-EM-60 10.1-1 13
6.11 S-RCA-JON-8-1 14
6.12 S-EM-62 OP.1 F-2-1 15

1.0 Introduction

The U. S. Department of Energy (DOE) Office of Health, Safety and Security (HSS), conducted a Type A Accident Investigation (Type A) following the July 2007 Tank S-102 waste spill at the DOE Hanford Nuclear Reservation. The Accident Investigation Board identified sixteen Judgements of Need (JON) in the areas of engineering, work processes, emergency management, industrial hygiene, and management and oversight. A Corrective Action Plan (CAP) was developed, approved, and implemented.

Following implementation, in April 2009, DOE conducted an effectiveness review of the Type A corrective actions. The objective of the review was to evaluate the effectiveness of the corrective actions in addressing and correcting the underlying causes of the JONs and preventing recurrence. The effectiveness assessment concluded that the corrective actions resulting from the Type A accident investigation were effective and complete. The assessment identified 26 opportunities for improvement. The DOE/ORP requested a formal response to address 14 of the 26 suggestions for continued improvement to include; 1) the plan (including specific actions planned) for implementing suggestions, 2) the dates when the specific actions will be completed and verified, and 3) the Problem Evaluation Request (PER) tracking number for each suggestion. This CAP addresses the following Suggestions for Continued Improvement:

S-HE-1-1 WRPS should revise drill scenarios to include a chemical attribute that requires more in-depth Industrial Hygiene (IH) response which may include a worker(s) in contact with tank waste, chemical spill, vapor event, etc.

S-MS-1-3 WRPS should update the Fiscal Year (FY) 2009 Integrated Assessment Schedule such that assessments evaluating the continued efficacy of the lessons learned program are conducted.

S-WC-3-1 A consistent enhanced work planning/document concurrence approach should be implemented for technical changes to Abnormal Operating Procedures.

S-WC-3-2 The Tank Operations Contractor (TOC) should conduct periodic awareness/proficiency training on the "Immediate Recovery Work" process for those personnel involved in the process.

S-WC-3-3 Procedure non-compliance events identified since the issue of WRPS letter to DOE-ORP, "Washington River Protection Solutions LLC Response to Abnormal Events Surveillance S-09-ESQ-TANKFARM-003, "'Washington River Protection Solutions LLC Root and Common Cause Analysis Results,"' dated April 8, 2009, should be considered when implementing the corrective actions identified in the report.

S-WC-3-4 The TOC should improve the self-identification and reporting (i.e. per the PER process) of procedure non-compliances to facilitate causal determination, trending, and/or resolution.

S-WC-4-1	The TOC should determine if and when telephone approval is acceptable for the release of minor work, and proceduralize the requirements if it is deemed allowable.
S-WC-4-2	The TOC should determine the appropriate level of radiological controls for "Immediate Recovery Work" as discussed in TFC-OPS-MAINT-C-0l, *Tank Operations Contractor Work Control;* these controls must mesh with Section 4.10 of TFC-ESHQ-RP_RWP-C-04, *Radiological Work Permits* (i.e. consistent terminology-"immediate recovery" vs. 'emergency").
S-WC-4-3	The TOC should include a requirement to consider the need to develop industrial hygiene and safety controls in Section 4.3 of TFC-OPS-MAINT-C-0l, *Tank Operations Contractor Work Control,* when preparing for "Immediate Recovery Work."
S-WC-4-4	The TOC should include definitions for "troubleshooting" and "routine work" in the work control procedure, TFC-OPS-MAINT-C-0l, *Tank Operations Contractor Work Control.*
S-WC-4-7	WRPS should develop and conduct work control process training with shift managers and field work supervisors.
S-EM-60 10.1-1	Standing Order 07-008 should be revised to include a statement directing the length of time the Standing Order will remain in effect, and how the requirements of the order will be captured for future projects.
S-RCA-JON-8-1	Form A-6002-909, *Verification/ Validation (V& V) Checklist,* should be updated to require the Technical Authority to ensure critical tasks have been identified.
S-EM-62 OP.1 F-2-1	The TOC should incorporate continuing training on Technical Safety Requirements (TSRs) for Shift Managers; training should include the basis for each TSR, and information from the Documented Safety Analysis (DSA) including relevant accident scenarios and unmitigated consequences.

2.0 Corrective Action Methodology

A process based on Washington River Protection Solutions LLC (WRPS) procedure TFC-ESHQ-Q_C-C-01, Problem Evaluation Request, was used to develop this CAP. The Suggestions for Continued Improvement are documented in PERs in the WRPS Issues Management System. WRPS analysis of the Suggestions for Continued Improvement, Corrective Actions Taken, and Planned Corrective Actions will be documented and tracked in the associated PER.

3.0 Corrective Action Plan Structure

The CAP structure is as follows:

Suggestion for Continued Improvement Number: Number from Assessment.

Suggestion for Continued Improvement: Description from Assessment.

PER Tracking Number: WRPS PER identification number.

Responsible Manager: Assigned WRPS manager responsible for the analysis and corrective actions.

Evaluation: WRPS evaluation of the Suggestion for Continued Improvement.

Remedial Corrective Actions: The immediate actions taken.

Corrective Actions to be Taken: Planned Corrective Actions to implement the Suggestion for Continued Improvement.

4.0 Review and Approval of WRPS Corrective Action Plan

This CAP was developed by the assigned responsible manager and was approved by the Base Operations Manager.

5.0 Corrective Action Plan Reporting and Closure

Corrective Actions for the Suggestions for Continued Improvement will be tracked and monitored using the PER system.

To close an action, the responsible manager must provide objective evidence documenting completion of the actions. Closure documentation will be attached electronically to the associated PER.

6.0 Corrective Action Plan

6.1 S-HE-1-1

Suggestion for Continued Improvement: *WRPS should revise drill scenarios to include a chemical attribute that requires more in-depth Industrial Hygiene (IH) response which may include a worker(s) in contact with tank waste, chemical spill, vapor event, etc.*

PER Tracking Number: WRPS-PER-2009-0867

Responsible Manager: E. A. Tackett

Evaluation: WRPS has reviewed the Suggestion for Continued Improvement and agrees with the recommendation. Drill scenarios are developed based on results of the Emergency Planning Hazard Assessments that identify the hazards present in the facility. Scenarios are reviewed periodically for low consequence, high probability situations. Industrial Hygiene (IH) in-depth involvement will be reviewed on a routine basis and incorporated as required.

Remedial Corrective Actions: A chemical drill scenario was conducted on April 7, 2009 in support of the ORP/RL Emergency Preparedness (EP) Assessment and the S-102 Assessment in conjunction with the local DOE Office. The scenario involved a more in-depth IH response. WRPS will perform additional in-depth IH drill(s) within the calendar year.

Corrective Actions to be Taken:

Corrective Action	Deliverable	Action Owner	Due Date
Conduct in-depth IH specific drill within calendar year 2009.	Summary of drill scenario performed and verification of completion.	E. A. Tackett	1/1/2010

6.2 S-MS-1-3

Suggestion for Continued Improvement: *WRPS should update the Fiscal Year (FY) 2009 Integrated Assessment Schedule such that assessments evaluating the continued efficacy of the Lessons Learned program are conducted.*

PER Tracking Number: WRPS-PER-2009-0883

Responsible Manager: C. Maciuca

Evaluation: WRPS has reviewed the recommendation and agrees with the recommendation.

Remedial Corrective Actions: The WRPS Integrated Assessment Schedule was revised to include Specialty Assessment FY2009-ESHQ-S-0355, *WRPS Lessons Learned Program Effectiveness.*

Corrective Actions to be Taken:

Corrective Action	Deliverable	Action Owner	Due Date
Complete WRPS Specialty Assessment FY2009-ESHQ-S-0355, *WRPS Lessons Learned Program Effectiveness*	Completed Assessment	C. Maciuca	9/14/2009

6.3 S-WC-3-1

Suggestion for Continued Improvement: *A consistent enhanced work planning/document concurrence approach should be implemented for technical changes to Abnormal Operating Procedures.*

PER Tracking Number: WRPS-PER-2009-0870

Responsible Manager: T. Rahm

Evaluation: WRPS has evaluated the suggestion for improvement and agrees with the recommendations.

Remedial Corrective Actions: A revision to TFC-OPS-OPER-C-13, *Technical Procedure Control and Use*, has been drafted.

Corrective Actions to be Taken:

Corrective Action	Deliverable	Action Owner	Due Date
Revise TFC-OPS-OPER-C-13 to include the following: "Note: Changes to Abnormal Operating Procedures, other than inconsequential (as defined in TFC-ENG-SB-C-03) will be reviewed by the Procedure User, Shift Manager, Technical Authority, Security and Emergency Services/Events and Investigations, Safety, Radiological Control, and Environmental.	Revised Procedure	T. Rahm	7/5/2009

Corrective Action	Deliverable	Action Owner	Due Date
Revise TFC-OPS-OPER-C-13, Attachment A, "Review Matrix for Technical Procedures," to include Security and Emergency Services/Events and Investigations, Safety, Radiological Control, and Environmental as reviewers for changes (other than inconsequential) to AOPs.	Revised Procedure	T. Rahm	7/5/2009

6.4 S-WC-3-3

Suggestion for Continued Improvement: *Procedure non-compliance events identified since the issue of WRPS letter to DOE-ORP, Washington River Protection Solutions LLC Response to Abnormal Events Surveillance S-09-ESQ-TANKFARM-003, Washington River Protection Solutions LLC Root and Common Cause Analysis Results, dated April 8, 2009, should be considered when implementing the corrective actions identified in the report.*

PER Tracking Number: WRPS-PER-2009-0872

Responsible Manager: R. E. Gregory

Evaluation: WRPS evaluated the Suggestion for Continued Improvement and agrees with the recommendation. Subsequent to commencing the Root and Common Cause Analysis on WRPS Response to Abnormal Events, two procedural non-compliance events occurred (242-A Slurry Sampling and 242-A Lockout/Tagout Violation). Although these events were not incorporated into the Root and Common Cause Analysis, these events were considered during the development and implementation of Corrective Actions.

Remedial Corrective Actions: The following actions were completed to address procedure non-compliance events:

- A Conduct of Operations Council (COOC) was established on March 24, 2009. This council is the governing body for promoting continuous improvement in Conduct of Operations for the TOC. Goals of the COOC are to: 1) promote excellence and continuous improvement in Conduct of Operations (including Radiological Practices), 2) implement process changes that integrate Con Ops, human performance initiative (HPI), and Integrated Environment, Safety and Health Management System (ISMS), and 3) provide oversight and direction for company-wide Conduct of Operations and HPI related activities, guidelines,

priorities, monitoring, overall program effectiveness, communication, and lessons learned. (ref. WRPS-PER-2009-0385)

- On 4/24/09, the Base Operations Manager issued WRPS-0900641, Aggressive Management Observation Program Provides Results. The intent of the memo was to re-emphasize an aggressive Management Observation Program (MOP) to continually perform management oversight and encourage routine feedback. Focus areas identified to achieve disciplined operations include personal accountability, technical inquisitiveness, procedure compliance, and willingness to stop. (ref. WRPS-PER-2009-0385)

- A series of face-to-face briefings were performed within Base Operations and Single Shell Tank Retrieval and Closure Operations during April and May of 2009. Briefing topics included the timely identification of issues, questioning attitude, conservative decision making, procedure compliance, lessons learned, and formal communications. (ref. WRPS-PER-2009-0385)

- A Common Cause Analysis (CCA) was performed for similar events to the 242-A Slurry Sampling procedure non-compliance. The CCA was conducted utilizing event decomposition, historical review of events contained within the PER database, review of event investigation reports, historical performance metrics, and personnel interviews. The analysis identified the following primary common cause "Management Problem, Management Methods Less Than Adequate (LTA), Management Policy guidance/Expectations not well-defined, understood, or enforced." The analysis resulted in the generation of two new corrective actions to strengthen procedure compliance, command and control, and communications. (ref. WRPS-PER-2009-0471)

Corrective Actions to be Taken: No new corrective actions were generated as a result of this evaluation, however, the following planned corrective actions are in place to strengthen WRPS culture regarding strict procedure compliance:

- Update operator continuing training material to include Human Performance Initiative (HPI) training. ECD: 7/31/09 (ref. WRPS-PER-2009-0385)

- Develop a Conduct of Operations Improvement Plan to address weaknesses in Chapters 1, 2, and 4. The Conduct of Operation Improvement should include a means to reduce human error, increase management oversight and communications, and reinforcement of the questioning attitude. ECD: 7/31/09 (ref. WRPS-PER-2009-0471)

- Assemble a worker-level team to evaluate the active human errors (event "triggers") associated with the events described in CCA report for LTA Conduct of Operations at 242-A. Include an evaluation of "last-line-of-defense" tools/techniques used to prevent active human errors. Provide recommendations to the Conduct of Operations Council on tools, techniques, etc. that, if strengthened or implemented, will aid in the prevention of future similar events.

The team should include a cross-organizational representation of Bargaining Unit personnel, First Line Managers, and Operations Engineers. ECD: 7/20/09 (ref. WRPS-PER-2009-0471)

6.5 S-WC-3-4

Suggestion for Continued Improvement: *The TOC should improve the self-identification and reporting (i.e. per the PER process) of procedure non-compliances to facilitate causal determination, trending, and/or resolution.*

PER Tracking Number: WRPS-PER-2009-0873

Responsible Manager: C. Maciuca

Evaluation: WRPS has reviewed the recommendation and agrees with the areas of improvement identified.

Remedial Corrective Actions:

- The initiative to address the suggestion for continued improvement was completed by way of tailgate communications as part of ISMS verification activities. On May 18, 2009, a tailgate presentation was issued which included a knowledge test of the PER process with specific questions related to the document to be initiated (PER) for conditions that require resolution, trending, cause determination, or identification and tracking of corrective actions (including procedure non-compliances).

- Independent Assessment FY2009-WRPS-I-0005, *Base Operations Management Systems*, and FY2009-ESHQ-0355, *WRPS Lessons Learned Program Effectiveness,* have been added to the WRPS Integrated Assessment Schedule. These assessments will include an evaluation of the self-identification and reporting processes of procedure non-compliance related issues.

Corrective Actions to be Taken: No additional corrective actions necessary.

6.6 S-WC-4-1

Suggestion for Continued Improvement: *The TOC should determine if and when telephone approval is acceptable for the release of minor work, and proceduralize the requirements if it is deemed allowable.*

PER Tracking Number: WRPS-PER-2009-0857

Responsible Manager: J. Klos

Evaluation: WRPS evaluated the suggestion for continued improvement and agrees an evaluation is warranted. A team-approach evaluation of the process for telephone release of minor work activities will be performed. The resulting changes to the process will be proceduralized as warranted.

Remedial Corrective Actions: No remedial actions taken.

Corrective Actions to be Taken:

Corrective Action	Deliverable	Action Owner	Due Date
Utilizing a team-approach (soliciting input from end users), perform an in-depth evaluation to determine if telephone release of minor work is appropriate for certain situations.	Copy of evaluation	J. Klos	7/24/09
Implement changes, as necessary based on the evaluation, to TFC-OPS-MAINT-C-01, *Tank Operations Contractor Work Control.*	Revised procedure, as warranted.	J. Klos	7/24/09

6.7 S-WC-3-2, S-WC-4-2, and S-WC-4-3

It should be noted that an evaluation of the TFC-OPS-MAINT-C-01, *Tank Operations Contractor Work Control*, category "immediate recovery work" was performed to address the Suggestions for Continued Improvement items S-WC-3-2, S-WC-4-2, and S-WC-4-3. The improvement items are documented on individual PERs and vary by responsible manager, however, the collective evaluation and planned corrective action will adequately address the three improvement items.

Suggestion for Continued Improvement S-WC-3-2: *The Tank Operations Contractor (TOC) should conduct periodic awareness/proficiency training on the "Immediate Recovery Work" process for those personnel involved in the process.*

PER Tracking Number: WRPS-PER-2009-0871

Responsible Manager: T. Reynolds

Suggestion for Continued Improvement S-WC-4-2: *The TOC should determine the appropriate level of radiological controls for "Immediate Recovery Work" as discussed in TFC-OPS-MAINT-C-01, Tank Operations Contractor Work Control. These controls must mesh with Section 4.10 of TFC-ESHQ-RP-RPW-C-04, Radiological Work Permits, (i.e. consistent terminology – "immediate recovery" vs. "emergency."*

PER Tracking Number: WRPS-PER-2009-0875

Responsible Manager: J. Klos

Suggestion for Continued Improvement S-WC-4-3:

The TOC should include a requirement to consider the need to develop industrial hygiene and safety controls in Section 4.3 of TFC-OPS-MAINT-C-0l, Tank Operations Contractor Work Control, when preparing for "Immediate Recovery Work."

PER Tracking Number: WRPS-PER-2009-0875

Responsible Manager: J. Klos

Evaluation of S-WC-3-2, S-WC-4-2, and S-WC-4-3: WRPS reviewed the Suggestions for Continued Improvement and agrees with the recommendations. WRPS has the responsibility and authority to stabilize an event through Abnormal Operating Procedures (AOP) and Alarm Response Procedures (ARP) and other emergency response procedures. As such, during an event these procedures will be utilized to place the facility in a stable and safe condition. At which time, any recovery actions and/or corrective maintenance activities would be performed utilizing the work planning processes outlined in Section 4.0 of TFC-OPS-MAINT-C-01, *Tank Operations Contractor Work Control.* This process ensures the hazards associated with the work activity have been analyzed and mitigated. WRPS has reviewed this internally and with members of DOE/ORP staff. Therefore, the "immediate recovery" section of TFC-OPS-MAINT-C-01 is not deemed necessary. It is WRPS intent to remove this section from the work control procedure. Revisions to the processes/procedures are communicated in accordance with TFC-OPS-OPER-C-13, *Technical Procedure Control and Use* and/or TFC-BSM-AD-C-01, *Administrative Document Development and Maintenance.*

Remedial Corrective Actions: No remedial actions taken.

Corrective Actions to be Taken:

Corrective Action	Deliverable	Action Owner	Due Date
Revise TFC-OPS-MAINT-C-01 to remove reference to "immediate recovery work."	Revised procedure	J. Klos	7/24/09

6.8 S-WC-4-4

Suggestion for Continued Improvement: *The TOC should include definitions for "troubleshooting" and "routine work" in the work control procedure, TFC-OPS-MAINT-C-0l, Tank Operations Contractor Work Control.*

PER Tracking Number: WRPS-PER-2009-0877

Responsible Manager: J. Klos

Evaluation: WRPS has reviewed the Suggestion for Continuous Improvement and agrees. Definitions of "troubleshooting" and "routine work" should be included in TFC-OPS-MAINT-C-01, *Tank Operations Contractor Work Control.*

Remedial Corrective Actions: No remedial actions taken.

Corrective Actions to be Taken:

Corrective Action	Deliverable	Action Owner	Due Date
Revise TFC-OPS-MAINT-C-01 to define "troubleshooting" and "routine work."	Revised procedure	J. Klos	7/24/09

6.9 S-WC-4-7

Suggestion for Continued Improvement: *WRPS should develop and conduct work control process training with shift managers and field work supervisors.*

PER Tracking Number: WRPS-PER-2009-0880

Responsible Manager: L. Keith

Evaluation: WRPS has reviewed the Suggestion for Continued Improvement and agrees with the recommendation. Currently, there are several methods for delivering training on the work control process. Delivery methods for conducting training is determined as part of the training design and development process. On-the-job (OJT) is the highest level of training and is the delivery method previously chosen for Tank Farms work control training for Operations Engineers (which is the base qualification for a Shift Manager) and Field Work Supervisors. These elements are contained within qualification and requalification cards for these positions (ref. course numbers 350501, 350503, 354000, and 354002.)

Remedial Corrective Actions: No remedial actions taken.

Corrective Actions to be Taken: No additional corrective actions necessary.

6.10 S-EM-60 10.1-1

Suggestion for Continued Improvement: *Standing Order 07-008 should be revised to include a statement directing the length of time the Standing Order will remain in effect, and how the requirements of the order will be captured for future projects.*

PER Tracking Number: WRPS-PER-2009-0884

Responsible Manager: T. Reynolds

Evaluation: This Standing Order was canceled/closed on 7/23/08. Therefore, no other action is required associated with this Standing Order. Since that time, during C-110 Retrieval, a standing order was generated that defined the interface roles between the Single Shell Tank Retrieval and Closure organization and the Base Operations organization with regard to normal and abnormal conditions. This Standing Order was in effect during the retrieval of C-110 and has since been closed, now that the retrieval activities associated with C-110 are complete. The process of generating a Standing Order to document the interface between the organizations during retrieval activities will continue, as required with the closure of the Standing Order occurring once the retrieval activity is completed and agreed upon by DOE/ORP.

The Shift Managers review the existing Standing Orders on a quarterly basis per TFC-OPS-OPER-C-40, *Shift Instructions and Standing Orders*, for continued applicability.

Remedial Corrective Actions: Standing Order 07-008 was closed on 7/23/08.

Corrective Actions to be Taken: No additional corrective actions necessary.

6.11 S-RCA-JON-8-1

Suggestion for Continued Improvement: *Form A-6002-909, Verification/Validation (V&V) Checklist, should be updated to require the Technical Authority to ensure critical tasks have been identified.*

PER Tracking Number: WRPS-PER-2009-0885

Responsible Manager: T. Rahm

Evaluation: WRPS has evaluated the Suggestion for Improvement and agrees with the recommendation. The step which required the "technical authority" to ensure that critical tasks have been identified, was inadvertently removed from form A-6002-909 during a previous revision. The form was revised on 5/7/09 to address this recommendation.

Remedial Corrective Actions: Site Form A-6002-909 was revised on 5/7/09 to include Technical Authority, checkbox #18, "*Have critical tasks been identified?*"

Corrective Actions to be Taken: No additional corrective actions necessary.

6.12 S-EM-62 OP.1 F-2-1

Suggestion for Continued Improvement: *The TOC should incorporate continuing training on Technical Safety Requirements (TSRs) for Shift Managers; training should include the basis for each TSR, and information from the Documented Safety Analysis (DSA) including relevant accident scenarios and unmitigated consequences.*

PER Tracking Number: WRPS-PER-2009-0890

Responsible Manager: T. Reynolds

Evaluation: WRPS reviewed the suggestion for improvement and agrees with the recommendations. The Shift Managers have been trained in the past on the TSRs, however the training did not include the Basis. As part of the 2009, Change Notice 3 Amendment, the Shift Managers will be trained on the Basis. The first round of training will include two-thirds of the TSR controls. Training on the remaining one-third of the controls will be performed by the end of calendar year 2009. Scheduling and performance of the Safety Basis change training will be tracked in accordance with TFC-OPS-OPER-C-02, *Safety Basis Implementation Checklist Preparation, Review, and Approval.*

Remedial Corrective Actions: No remedial action taken.

Corrective Actions to be Taken: No new corrective actions were identified as a result of this review, however, the following planned corrective actions are in place to strengthen the TSR knowledge base within the TOC.

- Complete Documented Safety Analysis (DSA) and Technical Safety Requirements (TSR) Overview Training Briefings for designated operations and engineering personnel. ECD: 6/30/09 (ref. WRPS-PER-2008-0341)

- Conduct a performance-based evaluation of the effectiveness of TSR knowledge and compliance elements of the Shift Manager initial qualification, re-qualification, and continuing training programs. ECD: 9/30/09 (ref. WRPS-PER-2008-0341)

Task# WRPS-PER-2009-0883.1

E-STARS[R] Report
Task Detail Report
07/09/2009 1557

TASK INFORMATION			
Task#	WRPS-PER-2009-0883.1		
Subject	WRPS-PER-2009-0883; PIE; Complete WRPS Specialty Assessment FY2009-ESHQ-S-0355, WRPS Lessons Learned Program Effectiveness. Deliverable: Completed		
Parent Task#	WRPS-PER-2009-0883	**Status**	Open
Reference	WRPS-PER-2009-0883	**Due**	09/20/2009
Originator	^PER CAs	**Priority**	Medium
Originator Phone		**Category**	PER
Origination Date	07/09/2009 1019	**Generic1**	None
Remote Task#		**Generic2**	None
Deliverable	PER Review	**Generic3**	None
Class	None	**View Permissions**	Global
Instructions	*No Instructions*		

ROUTING LISTS		
1	Corrective Action	Active
	Complete WRPS Specialty Assessment FY2009-ESHQ-S-0355, WRPS Lessons Learned Program Effectiveness. Deliverable: Completed Assessment RESPONSIBLE MANAGER: When this corrective action is complete, enter a closure statement in E-STARS and close the E-STARS subtask. Refer to the Problem Evaluation Request procedure TFC-ESHQ-Q-C-C-01, Section 4.4 for closure documentation requirements	
	• Maciuca, Tino - Assign - Awaiting Response - Due Date - 09/14/2009 0000 *Instructions:*	

ATTACHMENTS

Attachments

1. CORR-2009-0104 ORP S-102 Effectiveness Final Report.pdf
2. Link to PER
3. WRPS 0901065 R1 Letter.doc.pdf
4. WRPS Lessons Learned Program Effectiveness assessment scheduled.pdf
5. WRPS-0901065 R1 Enclosure.pdf

COMMENTS

No Comments

TASK DUE DATE HISTORY

Modified	07/09/2009 1019 - ^PER CAs	**New Due Date**	09/20/2009 0000
Modified	07/09/2009 1019 - ^PER CAs	**New Due Date**	09/28/2009 0000

SUB TASK HISTORY

No Subtasks

-- end of report --

Save

Problem Evaluation Request (PER)

WRPS-PER-2009-0895
In Process/Work

PER No	Date of Discovery	Time of Discovery (24:00)	Project
WRPS-PER-2009-0895	05/05/2009	11:00	Base Ops

Location

272AW

How Was Problem Discovered

MOP

Description of Concern or Problem

While performing MOP on TFC-BSM-CP_CPR-C-18 Material Receipt, Storage, Issuance, Return, and Excess Control identified the following deficiencies:

- Direct and purchase card spare part purchases result in extra handling costs and loss of quality level due to improper storage
- No review process to initiate the review of old work package material
- Return to inventory control lacking: review
- Control of Convenience Storage material lacking
- Failure to use controlled warehouse facilities
- Failure to properly record material
- Excess review process lacking
- Review to retain material statements are vague and result in retaining obsolescence material
- Material not properly entered into PassPort
- Lack of justification of what parts are used for
- Do not return unused material to Vendors in a timely manner, resulting in excess

-Requirement - TFC-BSM-CP_CPR-C-18 Step 4.2.4.2 If all material issued for a work package is not used, have the responsible engineer and quality assurance engineer/technician change the quantity listed on the Bill of Material to the actual quantity; return all unused material, including material issued for work packages, along with a copy of the corrected Bill of Material, to Materials.

-Actual - Personnel stated that if all material was not used they return the Qual. Level material to the Materials department, however they typically do not have the engineer change the B.O.M. In addition if the material is "Shop Stock" (Nuts, Bolts, Conduit Straps, etc.) they will place the material in Shop Stock Qual. Level 0.

Requirement Not Satisfied	Source Document Number

Equipment Identification Number	System Identification

Immediate actions Taken or Planned

None Required.

Recommended Corrective actions

Simplify the procedure and train personnel.

Originator Contact

No

Originators Name	Originators ID	Originators Phone	Date Initiated
Cook, Randy W (inactive)	H9554735	(509) 372-1450	05/05/2009

SHIFT OPERATIONS REVIEW

Title

MOP on 272-AW per TFC-BSM-CP_CPR-C-18 Material Receipt, Storage, Issuance, Return, and Excess Control

How Discovered	Agency
self-ID prior to event	

Reportability	SSC Operability	Operability Review	Comp Measures Req
Non-Reportable	N/A	N/A	

Describe actions Taken or Recommended

No additional actions taken or recommended by BOSSM.

SO Reviewer Name	SO Reviewer ID	SO Reviewer Phone	SO Review Date
Malhan, Rakesh	H0046812	(509) 373-2689	05/05/2009

SCREENING

PER Significance Level			
PER with Resolution			
Independent Assessment Review	**Occurrence Report Number**	**Externally Identified**	
Yes		No	
Assigned Responsible Manager	**Facilities Rep / SSO**	**Safety Management Rep**	
Kennedy, Katherine E			
Program		**Safety Management Program**	
• N/A		• ^N/A^	

PER Screening Comments

FURTHER EVALUATION: Contact PER originator, review PER, is this a procedure non-compliance? Make recommendations for PER Screening Team.
(Nancy Brown 05/06/09)

RE-SCREEN REQUEST (Further Evaluation): Robinson, John M - 05/11/2009 -- Cathy Spears contacted the PER Originator and he fully expected the PER to be sent to him for action. Part of the issue from the perspective of maintenance returning unused equipment/parts to the material coordinators. Nonetheless the PER Orginator has been working through this matter, expects the PER to be issued to him, and is ready to respond to the issues identified therein.

RE-SCREEN COMMENTS: Change from F/E to PER w/ Res with informal Apparent Cause Analysis. Re-assign from John Robinson to Randy Cook.
(Nancy Brown 05/12/09)

Causal Code

MGT/Comm/Train	**Human Performance**	**GEMS**	**Equip/Eng/Other**
Failed Barrier	**ORPS Code**	**Functional Area**	**Work Process**
	Not Applicable	Acquisitions/Procurement	• Assessments • Procurement Document Control
ISMS	**Consequence Code**		
Provide feedback and continuous improvement	• Procedure - Administrative - Procedure ambiguous, in error, could not be worked, was not used		
PER Screening Chair	**PER Screening Chair ID**	**PER Screening Chair Phone**	**PER Screening Date**
Brown, Nancy L	H0088797	(509) 373-0992	05/06/2009

PAAA REVIEW

PAAA Screening	PAAA Codes	Function Codes	
PAAA, Non-NTS Reportable	• 10 CFR 830.122 (d) (2) • 10 CFR 830.122 (e) (1) • 10 CFR 830.122 (e) (2)	• Equipment Damage/Degradation/Loss/Storage Issues • Records	
NTS Report Number	**NTS Report Date**		

Repetitive / Recurrent	Programmatic	Intentional Violation / Misrepresentation	
No	No	No	

PAAA Screening Comments

PAAA Reviewer Name	PAAA Review Date	
Anderson, Craig E	05/06/2009	
PAAA Approver Name	**PAAA Approve Date**	
Anderson, Craig E	05/07/2009	

SENIOR MANAGEMENT REVIEW/CONCURRENCE

TF Operations Morning Leadership Call

N/A

Instructions for Responsible Manager

Review the PER Screening Tab for requested data. Complete the task in E-STARS in accordance with TFC-ESHQ-Q_C-C-01, and TFC-ESHQ-Q_ADM-C-12 Apparent Cause Analysis & Corrective Action Planning. .

Senior Management	Sr Mgmt ID	Sr Mgmt Phone	Sr Mgmt Review Date
Brown, Nancy L	H0088797	(509) 373-0992	05/13/2009

CAUSE ANALYSIS

Description of Occurrence

Extent of Condition

Safety Significance

Generic Implications

Remedial Corrective Action

Causal Analysis, Apparent Cause and/or Root Cause Analysis

ATTACHMENTS

Link to PER

RE_ Transfer _ Extend WRPS-PER-2009-0895.msg

AUDIT HISTORY

Change Date	Auditor	Comments
05/07/2009 10:01	Brown, Nancy L	Responsible Manager Task Launched by Brown, Nancy L
05/11/2009 15:46	Brown, Nancy L	'PER Screening Comments' was changed.
05/12/2009 11:00	Brown, Nancy L	'PER Significance Level' was changed from Further Evaluation to PER with Resolution. 'Independent Assessment Review' was changed. 'Assigned Responsible Manager' was changed. 'PER Screening Comments' was changed. 'Selected Work Processes' have changed.
05/13/2009 10:28	Brown, Nancy L	'Instructions for Responsible Manager' was changed.
06/30/2009 07:48	Glaman, Linda R	'Assigned Responsible Manager' was transfered from R Tucker to K Kennedy per attached email request. LBG I talked to Katie Kennedy and she agreed to take this PER.

		PER w/RES WRPS-PER-2009-0895 Owner: Ron Tucker New Owner: Katie Kennedy New Due Date: 07/30/09 Reason: This PER is in Katie's area of expertise and she is better able to answer it. She will need additional time to look at it and solve the problem. Heather Judkins for R Tucker 6-25-09

-- End of Report --
07/09/2009 03:58 PM

Task# WRPS-PER-2009-0895

E-STARS[R] Report
Task Detail Report
07/09/2009 1558

TASK INFORMATION			
Task#	WRPS-PER-2009-0895		
Subject	RES; MOP on 272-AW per TFC-BSM-CP_CPR-C-18 Material Receipt, Storage, Issuance, Return, and Excess Control		
Parent Task#		**Status**	Open
Reference		**Due**	08/07/2009
Originator	^PER Coordinator	**Priority**	Medium
Originator Phone		**Category**	PER
Origination Date	05/05/2009 1229	**Generic1**	None
Remote Task#		**Generic2**	None
Deliverable	PER Review	**Generic3**	None
Class	None	**View Permissions**	Global
Instructions	*No Instructions*		

ROUTING LISTS

1	Responsible Manager	Active
	Review the PER Screening Tab and Senior Manager Review for requested data. Complete the task in E-STARS in accordance with TFC-ESHQ-Q_C-C-01, and TFC-ESHQ-Q_ADM-C-12 Apparent Cause Analysis & Corrective Action Planning.	
	• Robinson, John M - Assign - Completed with comments - 05/11/2009 1250 *Instructions:* ↳ *Routing List:* Route List - Inactive *Instructions:* • Spears, Cathy S - Assign - Cancelled - 05/11/2009 1246	
	• ^PER Screening(Brown, Nancy L) - Review - Concur - 05/12/2009 1417 *Instructions:*	
	• ^Mgr Review(Brown, Nancy L) - Review - Concur - 05/13/2009 0957 *Instructions:*	
	• Cook, Randy W - Assign - Reassigned - 06/05/2009 0954 *Instructions:*	
	• Tucker, Ron - Assign - Withdrawn - 06/30/2009 0749 *Instructions:*	
	• Kennedy, Katherine E - Assign - Awaiting Response - Due Date - 07/30/2009 1630 *Instructions:*	
	• ^Independent Assessment Review - Review - Awaiting Response - Due Date - 08/03/2009 1630 *Instructions:*	
2	Review Initial PER	Inactive
	Review New PER	
	• ^SO(Malhan, Rakesh) - Review - Concur - 05/05/2009 1511 *Instructions:*	
	• ^PER Screening(Brown, Nancy L) - Review - Concur - 05/06/2009 1527 *Instructions:*	

Task# WRPS-PER-2009-0895

	• ^Mgr Review - Review - Cancelled - 05/07/2009 1001 *Instructions:*
ATTACHMENTS	
Attachments	1. Link to PER 2. RE_ Transfer _ Extend WRPS-PER-2009-0895.msg
COMMENTS	
Poster	Robinson, John M - 05/11/2009 1250
	Completed
	Cathy Spears contacted the PER Originator and he fully expected the PER to be sent to him for action. Part of the issue from the perspective of maintenance returning unused equipment/parts to the material coordinators. Nonetheless the PER Orginator has been working through this matter, expects the PER to be issued to him, and is ready to respond to the issues identified therein.
Poster	^PER Coordinator (Glaman, Linda R) - 06/30/2009 0750
	transfer to K Kennedy and extend to 7-30-09 per attached email request. LBG 6-30-09
	I talked to Katie Kennedy and she agreed to take this PER. PER w/RES WRPS-PER-2009-0895 Owner: Ron Tucker New Owner: Katie Kennedy New Due Date: 07/30/09 Reason: This PER is in Katie's area of expertise and she is better able to answer it. She will need additional time to look at it and solve the problem. Heather Judkins for R Tucker 6-25-09 Approved, R Brown for T Maciuca 6-25-09

TASK DUE DATE HISTORY

Modified	06/30/2009 0748 - ^PER Coordinator (Glaman, Linda R)	**New Due Date**	08/07/2009 1630
Modified	05/13/2009 1029 - ^PER Coordinator (Brown, Nancy L)	**New Due Date**	06/29/2009 1630
Modified	05/07/2009 1001 - ^PER Coordinator	**New Due Date**	05/14/2009 1630
Modified	05/07/2009 1001 - ^PER Coordinator	**New Due Date**	05/14/2009 1630
Modified	05/05/2009 1229 - ^PER Coordinator	**New Due Date**	05/07/2009 1630

SUB TASK HISTORY

No Subtasks

-- end of report --

Message

From: Brown, Robert L
Sent: Thursday, June 25, 2009 3:34 PM
To: ^WRPS Corrective Action Group
Subject: RE: Transfer & Extend WRPS-PER-2009-0895

Please extend

From: ^WRPS Corrective Action Group
Sent: Thursday, June 25, 2009 3:09 PM
To: Brown, Robert L
Cc: ^WRPS Corrective Action Group; Judkins, Heather
Subject: FW: Transfer & Extend WRPS-PER-2009-0895
Importance: High

This PER is currently due 6-29-09. It has not had a previous extension. It is to be transferred to a new Responsible Manager. With the extension, the new RM will have 35 days to complete the resolution. As the PER started out as a FE, it will be 86 days old at resolution completion instead of the expected 78 days.

Thanks...As always, please call if you have questions

Linda RB Glaman

Operations Support Specialist/CAM

Turning 'round-n-'round downtown

539-2771

"The only stupid question is the one that remains unasked"

From: Judkins, Heather
Sent: Thursday, June 25, 2009 2:46 PM
To: ^WRPS Corrective Action Group
Subject: Transfer & Extend WRPS-PER-2009-0895

I talked to Katie Kennedy and she agreed to take this PER.

PER w/RES
WRPS-PER-2009-0895
Owner: Ron Tucker
New Owner: Katie Kennedy
New Due Date: 07/30/09
Reason: This PER is in Katie's area of expertise and she is better able to answer it. She will need additional time to look at it and solve the problem.

Heather Judkins

272-AW Base Operations
Work Management & Integration
Administrative Specialist
373-5450

Save

Problem Evaluation Request (PER)

WRPS-PER-2009-0896
In Process/Work

PER No	Date of Discovery	Time of Discovery (24:00)	Project
WRPS-PER-2009-0896	05/05/2009	15:29	Safety/IH-RC

Location

OTHER

How Was Problem Discovered

DOE-ORP

Description of Concern or Problem

The U. S. Department of Energy, Office of River Protection (ORP) conducted a Phase I assessment (A-09-ESQ-TANKFARM-001) of the programmatic elements of the Washington River Protection Solutions LLC Industrial Hygiene program during January and February 2009. The assessment was directed at four elements of interest including past assessments, program technical basis and procedures, staff qualifications, and program management. The assessment resulted in four Findings and one Observation including:

A-09-ESQ-TANKFARM-001-F01: Contrary to 29 CFR 1910.120(p)(5), "New Technology Program," 29 CFR 1910.120(o)(l),"New Technology Programs" and 1910.120(o)(2) WRPS has not established and implemented programmatic procedures which direct the evaluation and ii introduction of new technologies into the WRPS Environmental Safety Health & Quality group, which includes the IH program.

Requirement Not Satisfied	Source Document Number

Equipment Identification Number	System Identification

Immediate actions Taken or Planned

Initiated PER

Recommended Corrective actions

Assign to Rueben Mendoza. Develop CAP and transmit to ORP.

Originator Contact

e-mail

Originators Name	Originators ID	Originators Phone	Date Initiated
Mata, Beth L	H0056284	(509) 373-0422	05/05/2009

SHIFT OPERATIONS REVIEW

Title

ORP Assessment of Industrial Hygiene Program Finding 1

How Discovered	Agency
Externally Identified	DOE ORP

Reportability	SSC Operability	Operability Review	Comp Measures Req
Non-Reportable	N/A	N/A	

Describe actions Taken or Recommended

No additional actions taken or recommended by BO Shift Office.

SO Reviewer Name	SO Reviewer ID	SO Reviewer Phone	SO Review Date
Higham, Dale B	H0078950	(509) 373-2689	05/05/2009

SCREENING

PER Significance Level	
PER with Resolution	

Independent Assessment Review	Occurrence Report Number	Externally Identified	
Yes		Yes	

Assigned Responsible Manager	Facilities Rep / SSO	Safety Management Rep	
Mendoza, Ruben E		Tuckness, Dennis T	
Program		**Safety Management Program**	
• N/A		• Industrial Hygiene	
PER Screening Comments			
PER w/ Res with informal Apparent Cause Analysis (Nancy Brown 05/06/09)			
Causal Code			
A5B2C08	Communications LTA Written Communications Content LTA Incomplete/situation not covered		
MGT/Comm/Train	**Human Performance**	**GEMS**	**Equip/Eng/Other**
Failed Barrier	**ORPS Code**	**Functional Area**	**Work Process**
	Not Applicable	Engineering	• Assessments • IH Program • Requirements Management
ISMS	**Consequence Code**		
Perform work within the controls	• Procedure - Administrative - Procedure ambiguous, in error, could not be worked, was not used		
PER Screening Chair	**PER Screening Chair ID**	**PER Screening Chair Phone**	**PER Screening Date**
Brown, Nancy L	H0088797	(509) 373-0992	05/06/2009
PAAA REVIEW			
PAAA Screening	**PAAA Codes**	**Function Codes**	
PAAA, Non-NTS Reportable	• 10 CFR 851.23 (a)(3)	• Work Practices, Procedures, and Administrative Controls	
NTS Report Number	**NTS Report Date**		
Repetitive / Recurrent	**Programmatic**	**Intentional Violation / Misrepresentation**	
No	No	No	
PAAA Screening Comments			
29CFR1910.120(p)(5), 120(o), 120(o)(2)			
PAAA Reviewer Name	**PAAA Review Date**		
Anderson, Craig E	05/06/2009		
PAAA Approver Name	**PAAA Approve Date**		
Anderson, Craig E	05/07/2009		
SENIOR MANAGEMENT REVIEW/CONCURRENCE			
TF Operations Morning Leadership Call			
N/A			
Instructions for Responsible Manager			
Review the PER Screening Tab for requested data. Complete the task in E-STARS in accordance with TFC-ESHQ-Q_C-C-01, and TFC-ESHQ-Q_ADM-C-12 Apparent Cause Analysis & Corrective Action Planning.			
Senior Management	**Sr Mgmt ID**	**Sr Mgmt Phone**	**Sr Mgmt Review Date**
Brown, Nancy L	H0088797	(509) 373-0992	05/07/2009
CAUSE ANALYSIS			
Description of Occurrence			

Office of River Protection (ORP) conducted a Phase I assessment (A-09-ESQ-TANKFARM-001) of the programmatic elements of the Washington River Protection Solutions LLC Industrial Hygiene program during January and February 2009. The assessment resulted in four Findings and one Observation including:
A-09-ESQ-TANKFARM-001-F01: Contrary to 29 CFR 1910.120(p)(5), "New Technology Program," 29 CFR 1910.120(o)(l),"New Technology Programs" and 1910.120(o)(2) WRPS has not established and implemented programmatic procedures which direct the evaluation and ii introduction of new technologies into the WRPS Environmental Safety Health & Quality group, which includes the IH program.

Extent of Condition

The existing WRPS plans/procedures were reviewed with the Industrial Health organization to determine which ones should but do not adequately incorporate the referred to requirements of 29 CFR 1910 at this time. The WRPS procedures/plans that need to be modified to further incorporate the referred to sections of 29 CFR 1910 are identified in the attached corrective action plan. Additional CFR requirements were not reviewed for incorporation in WRPS requirements documents.

Safety Significance

The incomplete incorporation of the technology development sections of 29 CFR 1910 in WRPS plans/procedures does not impact human, environmental, or equipment safety. The existing WRPS procedures/plans already provide adequate human, environmental, and equipment safety. The Technology Development efforts are to provide potential future improvements to the equipment/systems in place

Generic Implications

Remedial Corrective Action

Write Corrective Action Plan to detail the procedure/plan changes to more formally describe the process for implementation of Technology Development in the Industrial Hygiene program.

Causal Analysis, Apparent Cause and/or Root Cause Analysis

Although technology development for the industrial hygiene program is currently being performed, the tie to the requirements of 29 CFR 1910.120 for new technology programs is not as clearly outlined in the WRPS plans/procedures as they should be. WRPS determined that revising the plans/procedures as noted in the corrective action plan would strengthen the program.

CORRECTIVE ACTIONS

Actionee	Action Due Date	E-STARS Number
Jones, Mark W	08/28/2009	

Action

Update TFC-PLN-55 "Industrial Hygiene Safety Management Program Plan" to describe the existing practice for complying with the standard, give direction on giving input to the Health and Safety organization on new technologies evaluated, and adding to the requirements section 29 CFR 1910.120(p)(5), "New Technology Program, " 29 CFR 1910.120(o)(1), "New Technology Programs" and 1910.120(o)(2).

Corrective Action Attachments

Actionee	Action Due Date	E-STARS Number
Gaydosh, William L	08/28/2009	

Action

Update TFC-PLN-91 "Industrial Safety Management Program Plan" to describe the existing practices related to industrial safety worker protection equipment (e.g., fall protection devices) for complying with the standard, give direction on giving input to the Health and Safety organization on new technologies evaluated, and adding to the requirements section 29 CFR 1910.120(p)(5), "New Technology Program, " 29 CFR 1910.120(o)(1), "New Technology Programs" and 1910.120(o)(2).

Corrective Action Attachments

Actionee	Action Due Date	E-STARS Number
Mendoza, Ruben E	08/28/2009	

Action

Update TFC-PLN-90 "Technology Development Management Plan" to clearly state the existing practice is in compliance with the new technology standard, give direction on giving input to the Health and Safety organization on new technologies evaluated, and adding to the requirements section 29 CFR 1910.120(p)(5), "New Technology Program, " 29 CFR 1910.120(o)(1), "New Technology Programs" and 1910.120(o)(2).

Corrective Action Attachments

Actionee	Action Due Date	E-STARS Number

Jones, Mark W	07/31/2009	
Action		
Develop and maintain a centralized list of new technologies evaluated. The list will include input from engineering, industrial safety and industrial hygiene.		
Corrective Action Attachments		
ATTACHMENTS		
0900723_09-ESQ-076_WRPS_-_[0904160568].pdf		
Link to PER		
WRPS 0901072 R1 Letter.doc[1].pdf		
WRPS-0901072_R1_Enclosure_Native.doc		
AUDIT HISTORY		
Change Date	**Auditor**	**Comments**
05/06/2009 08:03	Brown, Nancy L	'Recommended Corrective actions' was changed at the request of the PER originator.
05/07/2009 10:10	Brown, Nancy L	Responsible Manager Task Launched by Brown, Nancy L

-- End of Report --
07/09/2009 04:00 PM

Task# WRPS-PER-2009-0896

E-STARS[R] Report
Task Detail Report
07/09/2009 1600

TASK INFORMATION			
Task#	WRPS-PER-2009-0896		
Subject	RES; ORP Assessment of Industrial Hygiene Program Finding 1		
Parent Task#		**Status**	Open
Reference		**Due**	06/27/2009
Originator	^PER Coordinator	**Priority**	Medium
Originator Phone		**Category**	PER
Origination Date	05/05/2009 1533	**Generic1**	None
Remote Task#		**Generic2**	None
Deliverable	PER Review	**Generic3**	None
Class	None	**View Permissions**	Global
Instructions	*No Instructions*		

ROUTING LISTS

1	Responsible Manager	Active
	Review the PER Screening Tab for requested data. Complete the task in E-STARS in accordance with TFC-ESHQ-Q_C-C-01, and TFC-ESHQ-Q_ADM-C-12 Apparent Cause Analysis & Corrective Action Planning.	
	• Mendoza, Ruben E - Assign - Completed with comments - 06/17/2009 1424 *Instructions:*	
	• Mendoza, Ruben E - Assign - Completed with comments - 06/17/2009 1425 *Instructions:* Did you contact the originator about the PER? Document your contact in the response window.	
	• ^Independent Assessment Review(Brown, Robert L) - Review - Concur with comments - 06/17/2009 1626 *Instructions:* Independent Assessor Review	
	• Tuckness, Dennis T - Review - Concur with comments - 06/19/2009 0954 *Instructions:* Safety Management Representative Review	
2	Review Initial PER	Inactive
	Review New PER	
	• ^SO(Higham, Dale B) - Review - Concur - 05/05/2009 2223 *Instructions:*	
	• ^PER Screening(Brown, Nancy L) - Review - Concur - 05/06/2009 1534 *Instructions:*	
	• ^Mgr Review(Brown, Nancy L) - Review - Concur - 05/07/2009 1002 *Instructions:*	

ATTACHMENTS

Attachments	1. 0900723_09-ESQ-076_WRPS_-_[0904160568].pdf 2. Link to PER 3. WRPS 0901072 R1 Letter.doc[1].pdf 4. WRPS-0901072_R1_Enclosure_Native.doc

COMMENTS

Poster	Mendoza, Ruben E (Bowman, Tami A) - 06/17/2009 1424

Task# WRPS-PER-2009-0896

	Completed		
	Corrective actions ready for launch. Mendoza/Bowman 06/17/2009		
Poster	Mendoza, Ruben E (Bowman, Tami A) - 06/17/2009 1425		
	Completed		
	PER originator was involved in the writing of the corrective actions. Bowman 06/17/2009		
Poster	^Independent Assessment Review (Brown, Robert L) - 06/17/2009 1626		
	Concur		
	Concur		
Poster	Tuckness, Dennis T - 06/19/2009 0954		
	Concur		
	This action has been reviewed by the IH program and Worker S&H program		
TASK DUE DATE HISTORY			
Modified	05/07/2009 1010 - ^PER Coordinator	**New Due Date**	06/19/2009 1630
Modified	05/07/2009 1010 - ^PER Coordinator	**New Due Date**	06/27/2009 1630
Modified	05/05/2009 1533 - ^PER Coordinator	**New Due Date**	05/07/2009 1630
SUB TASK HISTORY			
No Subtasks			

-- end of report --

INCOMING CORRESPONDENCE COVERSHEET

CORR-2009-0083

Author	Addressee	Correspondence No.
J. C. Poniatowski/ORP	J. M. Armstead/WRPS	0900723 DOE-ORP: 09-ESQ-076

Subject: CONTRACT NO. DE-AC27-08RV14800 – RESULTS OF ASSESSMENT A-09-ESQ-TANKFARM-001, PHASE 1, "INDUSTRIAL HYGIENE TECHNICAL BASIS"

DISTRIBUTION

Washington River Protection Solutions
WRPS Correspondence Control
JC Allen-Floyd
JM Armstead
F Beranek ((Assignee))
HS Berman
MN Brosee
C Burrows
GJ Johnson
WJ Johnson
MW Jones
MA Lindholm
KJ Rueter
DJ Sansotta
SM Sax
BR Thomas
DT Tuckness

Priority:	**NORMAL**
Assignee:	F. Beranek
Received:	April 16, 2009
Due Date:	5/16/2009 – Respond to the assessment findings as directed by ORP.

WRPS Correspondence Control
For Questions call: 376-0271
Outlook Address: ^WRPS Correspondence Control

U.S. Department of Energy
Office of River Protection
P.O. Box 450, MSIN H6-60
Richland, Washington 99352

APR 15 2009

0900723

09-ESQ-076

Mr. Mike Armstead, Contract Manager
Washington River Protection Solutions LLC
2440 Stevens Center Place
Richland, Washington 99354

Dear Mr. Armstead:

CONTRACT NO. DE-AC27-08RV14800 – RESULTS OF ASSESSMENT A-09-ESQ-TANKFARM-001, PHASE I, "INDUSTRIAL HYGIENE TECHNICAL BASIS"

This letter transmits the results of the U.S. Department of Energy, Office of River Protection assessment of the Tank Operations Contractor "Industrial Hygiene Technical Basis." The assessment was completed on February 23, 2009.

The assessment resulted in four findings. The assessment team concluded that there are deficiencies in the programmatic assessment of new technologies to enhance worker safety and health, the selection and use of Direct Reading Instruments for air monitoring, the incorporation of the goal of applying the concept of "As Low As Reasonably Achievable" (ALARA) to chemical vapor exposures, and the selection process for personal protective equipment.

It should be noted that the Washington River Protection Solutions LLC is being requested to demonstrate how the ALARA concept shall be incorporated into the safety culture with respect to the monitoring and control of chemical vapors, as it is being applied to ionizing radiation hazards.

Within 30 days of receipt of this letter you shall respond to the assessment findings. The response shall include:

- The corrective actions that have been taken (i.e., compensatory measures) to control or remove any adverse impact from the non-compliant condition until sustainable corrective actions are implemented;

- The corrective actions that will be taken to identify the extent of condition, correct the causes, and prevent further findings (i.e., Corrective Action Plan); and

- The date when all corrective actions will be completed verified and compliance to the applicable requirements achieved (i.e., completion of an effectiveness review).

APR 1 5 2009

If you have any questions, please contact me, or your staff may contact William J. Taylor, Assistant Manager, Office of Environmental Safety and Quality, (509) 376-7851.

Sincerely,

Joseph C. Poniatowski
Contracting Officer

ESQ:RLU

Attachment

cc w/attach:
WRPS Correspondence

RECEIVED
APR 1 6 2009
WRPS
CORRESPONDENCE CONTROL

Attachment
09-ESQ-076
A-09-ESQ-TANKFARM-001

United States Department of Energy
Office of River Protection
Tank Operations Contractor
Industrial Hygiene Technical Basis Assessment

Final Report
A-09-ESQ-TANKFARM-001
March 10, 2009

Richard L. Urie
Team Leader

EXECUTIVE SUMMARY

The U.S. Department of Energy, Office of River Protection (ORP) conducted a Phase I assessment of the programmatic elements of the Washington River Protection Solutions LLC (WRPS) Industrial Hygiene (IH) program from January 16, 2009, through February 20, 2009. The assessment was directed at four elements of interest: past assessments, program technical basis and procedures; staff qualifications; and program management.

Conclusions

There are many very strong elements to the IH technical basis, including a well qualified staff; an extensive sampling and Personal Protective Equipment (PPE) inventory; proper utilization of accredited laboratories; and a solid funding base. The programmatic element for control, conveyance, and management of sampling data appears to be exceptional. WRPS has established over 80 documents related to IH information and directives. However, there is a missing tier of direction, which normally serves as the bridge between the general instructive programs and implementation. Specifically, there is an absence of written methodologies that normally provide the basis for the selection of PPE and some Direct Reading Instruments, which is a fundamental programmatic necessity. There is also a lack of strategic sample planning and data management, which is reportedly being addressed through the support of an expert IH consultative panel. In addition, there is an absence of a dedicated program for the review or development of new technologies for the purpose of enhancing worker health and safety, as required under 10 Code of Federal Regulations (CFR) 851, "Worker Safety and Health Plan."

An overriding observation of the WRPS technical basis is the prevalence of references made to IH professional judgment. ORP acknowledges and encourages the application of professional judgment, with respect to interpretation of directives and real time response to changes in operational needs or off normal events. However, there is an absence of the basis for decision making that has been critically reviewed, documented, and unilaterally applied to the WRPS operations. In addition, there is a lack of documentation of individualized IH decisions, which results in a lack of on-going and post event accountability. Lastly, the WRPS IH goals and objectives neither stipulate, nor discuss the requirement to reduce chemical exposures to As Low As Reasonably Achievable (ALARA), below the Occupational Exposure Limits (OEL). The absence of this goal is reflected in a prevailing attitude through IH and Industrial Hygiene Technician Staff, that chemical vapor exposures are adequately characterized and controlled with respect to conventional standards. ORP shall closely examine the WRPS health and safety culture in the second phase of the assessment to ascertain the degree in which this is problematic in regards to the impacts to the management of off normal events, continued efforts for improvement, and the incorporation of health and performance based goals.

FINDINGS

A-09-ESQ-TANKFARM-001-F01: Contrary to 29 CFR 1910.120(p)(5), "New Technology Program," 29 CFR 1910.120(o)(1),"New Technology Programs" and 1910.120(o)(2) WRPS has not established and implemented programmatic procedures which direct the evaluation and

introduction of new technologies into the WRPS Environmental Safety Health & Quality group, which includes the IH program.

A-09-ESQ-TANKFARM-001-F02: Contrary to 29 CFR 1910.132(d), 1910.132(d)(1), 1910.132(d)(1)(i), 1910.132(d)(1)(ii), 1910.132(d)(2), 1910.134(c) (1), 1910.134(c)(1)(i), and 1910.120(p)(8), WRPS has not established a written, fully comprehensive decision logic for the selection and use of PPE.

A-09-ESQ-TANKFARM-001-F03: Contrary to 10 CFR 851.21, "Hazard Identification and Assessment" there is a lack of specified criteria in the selection of direct reading air monitoring instrumentation and interpretation of results.

A-09-ESQ-TANKFARM-001-F04: Contrary to 10 CFR 851.21 and 851.23, there is an absence of written direction to incorporate the mandated goal of reducing worker exposure to carcinogens and all other chemicals to levels ALARA, below the Chemicals of Potential Concern (COPC) OEL.

OBSERVATION

A-09-ESQ-TANKFARM-001-O01: There is a lack of clear, consolidated information. The WRPS IH technical basis is overly complicated and confusing to both workers and outside viewers. There exists an uncharacteristically high element of deference to professional judgment.

Acronyms

ABIH	American Board of Industrial Hygiene
ACGIH	American Conference of Governmental Industrial Hygienists
AIHA	American Industrial Hygiene Association
ALARA	As Low As Reasonably Achievable
ANSI	American National Standards Institute
CFR	Code of Federal Regulations
CH2M HILL	CH2M HILL Hanford Group, Inc.
COC	Chain of Custody
COPC	Chemicals of Potential Concern
CPC	Chemical Protective Clothing
DOE	U.S. Department of Energy
DRI	Direct Reading Instrument
ESH&Q	Environmental Safety Health and Quality
HCC	Hanford Concerns Council
IH	Industrial Hygiene
IHT	Industrial Hygiene Technician
NIOSH	National Institute for Occupational Safety and Health
OEL	Occupational Exposure Limits
ORP	Office of River Protection
OSHA	Occupational Safety and Health Administration
PAPR	Powered Air Purifying Respirator
PEL	Permissible Exposure Level
PPE	Personal Protective Equipment
SST	Single Shelled Tank
STEL	Short Term Exposure Limit
TFC	Tank Farm Contractor
TFIH	Tank Farm Industrial hygienist
TLV	Threshold Limit Value
VOC	Volatile Organic Compound
WRPS	Washington River Protection Solutions LLC

Table of Contents

1.0 SURVEILLANCE SCOPE 1

2.0 SURVEILLANCE METHODOLOGY 1

3.0 DISCUSSION 1

4.0 CONCLUSIONS 13

5.0 FINDINGS AND OBSERVATIONS 15

6.0 REFERENCES (From DOE Standard IH Practices, DOE-STD-6005-2001 April 2001) 20

APPENDIX A. Principal Document Review and Comments
APPENDIX B. Industrial Hygiene Technical Basis Assessment of WRPS (PLAN), A-09-ESQ-TANKFARM-001
APPENDIX C. Integrated Safety Management System Evaluation Form
APPENDIX D. Assessment Team Biographies

1.0 SURVEILLANCE SCOPE

The scope of this 2009 Phase I assessment of the Washington River Protection Solutions LLC (WRPS) Industrial Hygiene (IH) program, is limited to the foundation of the program, involving an assessment of plans, procedures, risk assessment documents, staff qualifications, and documented management tools. Within this scope, the U.S. Department of Energy (DOE), Office of River Protection (ORP) team addresses the primary question: "Is WRPS properly planning, and effectively managing an industrial hygiene, occupational exposure assessment, and hazards management program that meets the intent of 10 CFR 851?"

2.0 SURVEILLANCE METHODOLOGY

The methodology of the assessment consisted of four discrete efforts, followed by Generator Assistance Program analysis based on the results of the assessment per the DOE 440.1-8, "Implementation Guide for use with 10 Code of Federal Regulations (CFR) 851." The four elements of the assessment were:

- A review of past assessments conducted by DOE, the Hanford Concerns Council (HCC) – expert panel, the CH2M HILL Hanford Group, Inc. (CH2M HILL) IH Program Health/Analysis presentation to the Executive Safety Review Board (September 25, 2008), WRPS "Industrial Hygiene Safety Management Program Plan-Management Assessment" - 0900116, the WRPS Fact Finding for 702AZ Condensate Drained from Ventilation Duct on December 17, 2008, Report NO. 2008-025; and the National Institute for Occupational Safety and Health (NIOSH), "Health Hazard Evaluation Report 2004-0145-2941;"

- A review and assessment of all available WRPS IH related documents which are generated or owned by the WRPS Environmental Safety, Health, and Quality (ESH&Q) division, plus select and pertinent tertiary documents that are referenced with the IH program documents;

- An evaluation of the IH personnel qualifications by way of a review of staff qualifications cards and through small group interviews of as many staff members as feasible; and

- A series of meetings with the WRPS IH manager and associated review of WRPS IH management records, data bases, and reports that reflect the current level of effort associated with IH treads analysis, program metrics, program planning, budgeting, staffing, self-assessments, and associated corrective actions.

3.0 DISCUSSION

Due to the relatively broad spectrum of the "Industrial Hygiene Technical Basis Assessment Phase I" scope of work; this section is simplified by being organized by the four basic elements, as follows: Review of Past IH Assessments; Document Review; Staff Qualifications; and Program Management. Each of these subsections refers to attachments, which provide specific methods and results or data points. Appendix A is a checklist generated from the performance evaluation criteria, as they pertain to the four primary assessment elements.

3.1 Past Tank Farm IH Assessments

A number of assessments, including two major third-party assessments have been performed on the chemical exposure elements of the Tank Farm IH program, over the last seven years. The two major assessments reviewed include the NIOSH "Health Hazard Evaluation Report 2004-0145-2941," released in July 2004 and the HCC commissioned report by an expert panel, entitled "The Industrial Hygiene Chemical Vapor Technical Basis," dated June 2008. These documents were reviewed to ascertain the historical concerns of the past contractor's program. One management assessment of the IH program was conducted by WRPS, since accepting operations on October 1, 2008, and in addition, ORP surveillance of WRPS response to an abnormal event, included some IH elements.

Under the current WRPS management assessment process, internal staff, including subcontractor personnel, perform an evaluation of the WRPS IH program, submit the results to the IH Program Manager and enter results into the Problem Evaluation Request system for tracking corrective actions. The results of the management assessment (WRPS-0900116, "Industrial Hygiene Safety Management Program Plan-Management Assessment," dated January 19, 2009) indicated four areas in need of improvement, improve an element of heat stress monitoring in a particular survey, maintaining procedures not used on a regular basis, issues on Right-to-Know Stations, and hierarchy of controls required by 10 CFR 851. The WRPS management assessment appears to be comprehensive in nature and some of the observations noted by WRPS are consistent with the ORP Assessment Team's observations, including the issue of some procedures not being updated since the implementation of 10 CFR 851 and deficiencies in the Personal Protective Equipment (PPE) selection process.

There are no WRPS assessments of IH practices during off normal events, other than a fact finding report at this time. The "ORP Management Concern S-09-ESQ-TANKFARM-003 WRPS Response to Abnormal Events" report was in draft form at the time of this assessment. However, it is of value to this assessment, as it provides direction in the review of IH procedures, relative to the chemical exposure risk assessment process, the documented process for selection and use of PPE, post event communications with the Hanford medical provider, selection and use of air monitoring instruments, and identification of exposure source materials.

The tank farm contractor transition briefing entitled "Industrial Hygiene Program Health/Analysis" dated September 25, 2008, provided only minimal amount of performance metrics of the IH program. Having an adequate set of metrics is needed since the overall goal of an IH program is the prevention of occupational disease, illnesses, and disorders that impact the health of workers; interfere with operational stability; and negatively impact the comfort and morale of personnel. As such, metrics that allow for the measurement and tracking of adverse impacts are necessary for the correction of causative factors in meeting this goal. Compliance with standards such as Threshold Limit Values (TLV) is a mandatory, secondary objective that assists in meeting this goal. Effort should be provided in developing leading indicators as much as possible.

3.2 Document Review

3.2.1 General

The Assessment Team reviewed over 80 WRPS IH related procedures, fact sheets, supporting documents, or sets of documents in the course of the assessment. They were comprised of top tier health and safety and IH management plans, staff qualifications plans and requirements, technical directives, quality assurance directives, operational procedures, performance tracking documents, an exposure monitoring data base, and WRPS web page based hazard communication resources. Appendix A of this assessment contains a list of those documents and observations associated with each document, as warranted.

The collective set of programmatic documents address a cadre of preventative medicine elements including hearing conservation, ergonomics, heat and cold stress, illumination, blood borne pathogens and others addressed in Appendix A. Of these elements, the thrust of the program is dedicated to the evaluation and control of chemical exposures. The chemical monitoring and control aspects of the written programs contain some excellent, advanced level efforts that have been developed as part of the technical basis for the understanding and control of chemical exposure associated with the waste constituents. Documents pertaining to the characterization of tank headspace vapors, personnel exposure sampling results, occupational exposure limits and liquid chemical constituents form the technical basis which serves as baseline risk assessments for the decision logic that follows in procedural documents. In addition, there are documents which provide very specific directions on IH monitoring, procedural processes, PPE, and administrative controls. Many of these documents at the secondary and tertiary levels are highly instructive and self-explanatory.

However, there are four general observations germane to a number of IH related procedures, one of which was also self-identified by WRPS. They are:

- The first is a lack of written core decision logic, which results in excessive deference to an IH professional judgment approach;

- Secondly, the collective state of the programmatic elements are very voluminous, somewhat contradictory (see "Example of Concern" on next page) and difficult to interpret at the implementation level. Both manifestations of the program may be cause for confusion and have a negative impact on the functionality and credibility of the program as a whole, particularly from interested parties not involved in the day-to-day IH operations.

- In addition, a sub-set of programmatic IH procedures pre-dated 2005 should have been revised to include as required by 10 CFR 851.23(a)(9) American Conference of Governmental Industrial Hygienists (ACGIH), "Threshold Limit Values for Chemical Substances and Physical Agents and Biological Exposure Indices," 2005 referenced

TLVs when they are lower (more protective) than permissible exposure limits found in 29 CFR 1910. For example, TFC-ESHQ-IH-STD-06, "Hearing Conservation Program," Revision A, dated October 28, 2004, was not revised to include the 2005 TLV, it should be noted the actual TLV in this case was not revised in 2005 it remains, 85 decibels, A-weighting scale [dBA] 8-hr Time Weighted Average;

- Communications between WRPS and AdvanceMed Hanford regarding medical surveillance, is not well defined. Medical surveillance stipulated for either pre-placement or annual exams typically do not provide the medical surveillance requirements to be met by the occupational medical contractor or in the absence of this information feedback – verification that the requirements were met before placement or continued placement. For example, 29 CFR 1910.1001(I), "Medical Surveillance" requires a specific pre-placement examination before an employee can be designated as an asbestos worker but TFC-ESHQ-IH-STD-04, "Asbestos Control – Facility Management/General Industry" does not document how these pre-placement requirements are transmitted to the occupational medical office or verified to have been met before placement;

- Lastly, the programmatic goals fail to address the requirement for monitoring and controlling chemical exposures to As Low As Reasonably Achievable (ALARA), below the Occupational Exposure Limits (OEL). The existing written goal of maintaining exposures below 50% of the OELs is not consistent with the requirements stipulated in DOE Orders, nor with the ACGIH, 2005 TLV booklet, incorporated into 10 CFR 851. The application of an ALARA goal is not only mandated, but is of particular significance to the health and safety of workers who deal with a vast mixture of chemicals, of unknown cumulative toxicological effects. In addition, there is no written consideration of the margin of sampling error associated with the existing sample collection and analysis utilized, nor for the use of Direct Reading Instruments (DRI) to monitor for short term exposure limits.

  Example of Concern:

  TFC-ESHQ-S-IS-C-02-RevB-12 (February 2008) states: "Some of the chemicals in tank waste and condensate can damage the skin, irritate the skin, or be absorbed through the skin"

  RPP-34147, Revision 0 (June 2007) states as the last statement of the conclusions: "Therefore, dermal exposure hazards from tank waste is extremely low and requires no additional Controls"

  Fact Sheet EH-0607 (October 2007) "Dermal Protection from Tank Waste, Condensate and Tank Vapors" refers to RPP-34147 for direction, suggesting (but unclear) that neither silver shield® Chemical Protective Clothing (CPC) or any other designated CPC is warranted for Tank Farms Operations at the listed tank sites.

3.2.2 Lack of Clear, Consolidated Information

WRPS maintains a hierarchy of programmatic documents, which flow down from general, to more specific information and directives. ORP recognizes that such a process is necessary due to the voluminous nature of the materials. However, the process, which has evolved out of response to needs, is cumbersome and sometimes lacks clarity in an end result. As an example, a key document is the "Tank Operations Contractor Health and Safety Plan." Normally, such a plan contains necessary instructions to workers as a standalone, pragmatic document which addresses eight fundamental subjects, mandated in 29 CFR 1910.120 (P). The sections of the WRPS document that address IH subject matter, collectively refer to 32 links necessary to understand the basic components, which in turn refer to over 200 secondary links. The difficulties in locating and extracting specific, operational IH information were reflected by Industrial Hygiene Technicians (IHT) during a small group interview. Yet the documents as a whole, fail to adequately address three of the eight mandated items. The subjects that are absent or deficient are: 1) Medical Surveillance; 2) New Technologies Program; and 3) Emergency Response, including PPE.

Example: INDUSTRIAL HYGIENE INSTRUMENTATION PLAN, TFC-PLN-64, REVISION B-1, summarizes the selection of DRIs as a skill of IH Professional decision as follows: "Instruments will be selected by the project Industrial Hygienist (IH) as part of the development of the sampling/monitoring plan and will be based on the hazard to be measured"

Another confusing element pertains to the "IH Exposure Assessment Strategy" (TFC-PLN-34, Revision D-2), which discusses Short Term Exposure Limits (STEL) Plan and Ceiling Limits, but is non-specific in the application to the strategy. A sub-section in Appendix B of the plan, states: "Ceiling limits are generally airborne concentrations which should never be exceeded…Certain chemicals have STELs or ceiling limits that have unique sample duration periods. Averaging times for the TF COPCs are listed in Appendix B." However, no further instruction is provided in Appendix B. (Note: this section is referenced as being adapted from the American Industrial Hygiene Association (AIHA) 1998, Leidel 1977, and ACGIH. It appears that the supporting appendices were not included in the WRPS plan.)

3.1.1 Personal Protective Equipment Decision Logic

A key element within the WRPS programmatic directives, which lacks reproducible methodology is that required for the selection of PPE. Although there are a number of good documents describing Chemicals of Potential Concern (COPC) and individual considerations of selection, there is no indication as to what PPE is available onsite; and neither a process nor a defensible, pre determined selection of PPE, which can be consistently utilized by the IH Staff.

3.2.3.1 Chemical Protective Clothing and Chemical Eye Protection

A review of documents related to PPE discuss tank waste chemical constituents relative to dermal exposure, but fall short of a discussion of the specific selection of CPC and eye protection associated with the toxicants of the waste and a pH of 13 (highly corrosive). In addition, there is no consideration of precautionary measures for such off normal effects as a splash involving a high body surface area, and/or the eyes. The "Personal Protective Equipment" TFC-ESHQ-S-C-02 is the baseline directive for the selection of chemical protective clothing and eye protection, yet the section on eye protection is limited to safety glasses for impact protection only. The CPC and glove section of The "Industrial Hygiene Exposure Assessment Strategy" TFC-PLN-34 D-2, refers to this document for direction on skin protection. A supporting document, the "Tank Waste Dermal Exposure Assessment" RPP-34147, serves as an extensive study of potential chemical absorption and justification for not issuing Silver Shield® or 4H® gloves for stipulated tank farms. However, each of the documents fail to address the following significant items:

- Protection from skin burns or dermatitis due to chemical contact of the hands;
- Protection from skin burns or large surface area chemical absorptions, from a large scale splash;
- the health impacts and protection of the eyes associated with liquid splash; and
- the documents collectively fail to provide a pre-determined decision or a clear decision process for the selection and service life of CPC. Such common considerations associated with multiple chemical breakthrough times, permeation rates, and degradation of various materials used in the selection and use of CPC is absent.

> **Note:** TFC-ESHQ-S-IS-C, Rev B-12 (PPE), Section 6.3.1 states that ***some chemicals in tank waste and tank condensate can damage the skin, irritate, or be absorbed by the skin and to consult IH in the work planning process.***

The IH technical basis requires CPC decision logic and methodologies. The level of effort necessary to fill in the gaps is potentially minor, but significant to the process.

3.2.3.2 Respiratory Protective Equipment

The Tank Operations Contractor Health and Safety Plan states the following:

"Personal protective equipment includes use of respiratory protection approved by Industrial Hygiene, either as specified in job procedures, Tank Vapor Information

Sheets, or job hazard analyses or through voluntary use even though not required for compliance with the occupational exposure limit."

In addition, the WRPS Respiratory Protection Plan is a 54-page document, of which two pages of text and a single page figure are provided on the subject of respirator selection. The information provided, is in general terms and includes a statement that **"Specific guidance for respirator selection is available from NIOSH and OSHA."** Neither document provides specific information that is relevant to what respirator options are available to WRPS, the applicability of respirator cartridges to various COPCs, including carcinogens or mixed contaminant considerations; and those respirator ensembles that are not approved for specific applications, such as an acid gas cartridge is not approved for nitric acid nor hydrogen sulfide gas. No other documents were observed to address the decision logic for consistent decision making by IHs throughout the program.

During the course of interviews one IH professional discussed a recent event, in which a small quantity of methylene chloride was spilled and the IH was tasked with taking photos of the spill scene. The IH professional judged the exposure was below the TLV for methylene chloride, but utilized respiratory protective equipment on a voluntary basis. The respirator selected for the task was a Powered Air Purifying Respirator (PAPR) with (presumably) an organic vapor cartridge. The use of a PAPR was made in error, on two accounts: 1) PAPR is not approved for methylene chloride by manufacturers due to poor adsorption to activated carbon; and 2) Occupational Safety and Health Administration (OSHA) specifically mandates the use of supplied air respirators for potential exposure to methylene chloride vapors exceeds the Permissible Exposure Limit (PEL) or STEL (29 CFR 1910.1052(g)). In addition, there was no documented effort to perform a simple ventilation calculation to document the PEL or STEL was not exceeded. The professional judgment exercised in this situation demonstrates a potential outcome associated with the lack of written selection protocols and directions. Additionally, there is no common mode of documentation on the selection process of respiratory protection by the IH Professional. This in turn, leads to the inability of a technical peer review and a single point error for the respiratory selection process. Professional judgment alone is an insufficient technical basis for the selection of respiratory protection. WRPS must identify decision logic for unilateral application at tank farms.

3.2.4 Clarification of DRI Applications and Decision Logic

There are excellent documents within the WRPS program, which describe the use and calibration of IH instruments and a significant amount of data available for the characterization of COPCs. However, there is an absence of written directives or fact sheets that specifically demonstrate the applicability of some DRIs relative to what is being surveyed in sampling plans and the basis for turn back values. There are also tables which list the COPCs and the appropriate instrument or reference to a pump or SUMA® method, however, there is no summary for such operational and interpretative needs as the detection limits for the DRIs, cross sensitivity & correction factors, the range

relative to the COPCs and therefore, what determines a DRI action level. This absence of standardized criteria was reflected in an interview with IHTs, as inconsistencies in the assignment of DRIs for similar operations by different IHs. The following example indicates a failure associated with the absence of decision logic:

Example: Tank Farm Work Instruction WDL#111243, dated December 12, 2008, calls for the monitoring of organic and ammonia vapor, yet provides action levels for the described task as follows:

- Organic Vapors 2 ppm
- Ammonia 12 ppm
- Formaldehyde 0.2 ppm

The following failures occurred:

1. Formaldehyde cannot be detected by the prescribed instruments*.
2. Formaldehyde, by virtue of multiple toxicological risks, including carcinogenicity, irritation, and pulmonary sensitization, is a priority COPC, as evidenced by the lowest OEL.
3. Yet, the document fails to identify that the formaldehyde OEL is a ceiling value, meaning that an exposure of 0.3 ppm is not to be exceeded. This is a contradiction to the WRPS IH Exposure Assessment Plan (3.11) that mandates screening COPCs and controlling exposure to below 50% of the OEL. Not only is the action level above 50%, these action levels are intended for time weighted average exposures – not ceiling limits, which could instantaneously be exceeded.

*ORP confirmed that formaldehyde is a not COPC to be monitored at this location per the TVIS, and reference was mistakenly made on this work instruction.

ORP confirmed that formaldehyde is not a COPC to be monitored at this location, per RPP-RPT-29262, A-Prefix Tank Farms Vapor Hazard Characterization Report, Revision 0 and this reference was a quality assurance error on the work instruction, not a technical omission.

The WRPS IH technical basis does not offer a clear, documented decision logic and justification for utilizing or not utilizing DRIs for assessing possible excursions of exposure above baseline personal exposure data, as stated in Section 3.11 of TFC-PLN-34, Revision D-2, "IH Exposure Assessment Strategy." This plan does identify in Attachment E, a series of factors to be considered in the establishment of DRI action limits, and states: "The Safety and Health Director will review current screening action levels for appropriate conservatism," - a reference to professional judgement. Therefore, in the absence of decision logic, a review was conducted of the flow down of documents on this subject, which included the Tank Farm Chemical Exposure Hazard Analysis (series of reports), Tank Farms Vapor Characterization Report (series), Management of Vapor Control Zones, Instrumentation instructional documents (series), Fact Sheet:

"Monitoring for COPCs in the Tank Farm," and representative IH Monitoring and Sampling Plans, and Work Hazard Analysis documents. Questions that remain, would then include: Which Volatile Organic Compounds (VOC) are detected within the range and sensitivity of a 10.6 ev Photo Ionization Detector and which are not? When is a flame ionization detector then used and for what sub section of the COPCs? What common non VOCs such as N-Nitrosomethylethylamine, nitrous oxide, and mercury are not being monitored and why not? Are correction factors applied to combustible gas indicators calibrated with isopentane, but used primarily for hydrogen monitoring? What are the margins of error and interfering compounds to be considered for use of DRIs? These elements of the IH Exposure Assessment strategy appear to be absent. ORP recognizes that DRIs are an important element of the overall strategy, and that there are limitations in their application; however, the process of determining the use, limitations, and associated applications must be documented, to support designated use.

Formaldehyde has a ceiling value (not to be exceeded) of 3 ppm, but a WRPS action level of 2 ppm. The accuracy of the detector tube may range from +/- 35% to +/- 50%, which indicates that ceilings could be exceeded before actions are initiated. In addition, detector tubes are cumbersome, time consuming to operate, and difficult to read. The logistics of the DRI sampling and the margin of error suggest that either the action level or the mode of DRI sampling may not have been subjected to the same decision logic as other COPCs, indicating inconsistency.

3.3 STAFF QUALIFICATIONS

WRPS has an extensive staff of 54 IH professionals, which includes 3 managers (of which one is certified in IH), 9 industrial hygienists (of which 5 are certified in IH) and 32 IHTs, who are represented under the collective bargaining agreement.

There are qualifications standards which identify baseline requirements and responsibilities for IH Professional (TFC-BSM-TQ-STD-01, "Technical Staff Qualification Requirements") and IHT (TFC-BSM-TQ-STD-07, "Industrial Hygiene Technician Training and Qualification Requirements.") In addition, WRPS maintains both IH and IHT qualification cards (350882, "Qualification Card for Industrial Hygiene Professional," Revision 0804.1 and 350292, "Qualification Card for TOC Industrial Hygiene Technician," Revision 0608.1). The process does not separately address specialty positions such as the IHT Lead nor does it address any special requirements for the IHT responsible for being the IH equipment custodian or respiratory protective equipment custodian.

The IH professional qualifications standard and process is relatively rigorous. The IH professional qualification process is primarily directed at having a Bachelors degree in IH or related science, two years of IH experience and one year of IH experience in the nuclear industry or equivalency; plus extensive required reading, self-study and procedural

orientation. The IH professional is required to obtain 24 hours of continuing education per year. A majority of the IH professionals on staff hold current certifications through the American Board of Industrial Hygiene (ABIH). A sample review of completed IH professional qualification card was not part of the scope of Phase I of the assessment.

The IHT qualification process requires an Associate Degree in safety and health technology, applied science or related science, one year job related experience or equivalent combination of education and experience plus extensive in-house training on fundamentals and instrumentation. The IHT process does include hands on training in the classroom and periodic updates on seldom used instruments. Sample observations of IHT process qualification or requalification was not part of this assessment, but will be part of the Phase II assessment.

Feedback from group interviews involving 31 of the 54 IH professional staff found them to be very aware of the Tank Farm IH issues. The majority of the IH professionals on staff have extensive commercial and DOE Complex experience in the subject areas of the assessment. The IH professional staff was very open and provided their candid professional opinion of the current WRPS IH program and areas for possible improvement (e.g., training). A common questioned asked by the Assessor's during the interviews were on the subject of level of effort expended on tank farm vapor sampling – over board, too little or just right. The consensus was that the vapor sampling was larger then should be in relationship to the commercial industry but it was understood and accepted. The morale of the IH Professional staff seems to be holding up during the last few years both CH2M HILL/WRPS have been able to maintain a high level IH staff (it should be noted a current WRPS employee is going to take part one of the ABIH certification process this coming June). There was common consensus among the WRPS IH professional staff that there is generally room for improvement of the program but no other portion of the IH program is Less Than Adequate due to the attention being given to the Tank Farm vapor issue. Another common question asked by the Assessor's during the interviews was in regards to the nature of interface or projects which ally the fear of workers and result in a prudent level of risk information regarding Tank Farm vapor issues; for which several interfaces were described including the Chemical Vapor Solutions Team, Presidents Council, and Chemical Hazard Awareness Training. However, it appears a sustained effort to provide risk information to workers about historical and ongoing sampling results, including IH instrument capabilities and limits in relation to the radiological instrumentation has not been accomplished.

The control of IHT field data forms, Chain of Custody (COC), conveyance to IH records, management of sampling data, and distribution of employee occupational exposure notification is controlled by TFC-ESHQ-S_IH-C-46, "Industrial Hygiene Reporting and Records Management," Revision B-1. The electronic record copy of sampling is maintained on the Tank Farm Industrial Hygiene (TFIH) database from transposed field notes and backed up every evening on hard drive. During discussions with the first group of IHT it was very clear they understood the rules of COC. The ORP field observations of sampling taken by IHTs and conveyance of the sample media through processing and records management will be a portion of the Phase II assessment. Interviews with the WRPS personnel responsible for maintaining the TFIH database appear to be well versed in the capability of

TFIH database and associated software. The TFIH database software is currently maintained by Lockheed Martin Services, Inc.

A majority of the IHT have at least five or more years experience working as IHT in Tank Farms or at the Hanford Site. Based on interviews the IHTs who have responsibility as the IH equipment custodian and respiratory expert have extensive knowledge (both have over 20 years Hanford experience) of their respective fields and were able to discuss in adequate detail technical subjects of their respective assigned job areas. One follow up question to WRPS management was on the succession planning in case either IHT decides to retire, the feedback provided was that the respiratory protection program is well covered but given the technical complexity of the IH equipment custodian duties, there were succession issues which are being actively pursued. The Field IHTs appear to have an adequate understanding of the basics of the most commonly used IH instruments. Based on response to questions, the IHT provided a mixed response to the ease of use of IH procedures and sampling plans, on occasion a work pause was needed for clarification. Another common theme among the IHT, was there was different responses based on the same vapor hazard between Base Operations, Single-Shell Tank (SST) Retrieval, and Closure, including the area of down posting a Vapor Control Zone. Not all IH sampling plans require personnel monitoring/sampling in the absence of it being mandated as part of the work task. There is a general reluctance for worker's to wear the sampling apparatus on a voluntary basis, as there is a complaint of it being cumbersome.

3.4 Program Management

The WRPS IH Management efforts address a cadre of departmental elements such as staff training, budgeting, data management, quality assurance, scheduling, review and updating of written programs, and strategic planning. WRPS IH program management is centered within the ESH&Q group of WRPS, although the majority of IH personnel are deployed to Base Operations or SST Retrieval and Closure for operational support. The IH program manager is a Certified Industrial Hygienist and responsible for central functions such as program metrics, data management, technical basis risk assessments, and primary procedural components.

3.4.1 Goals, Metrics and Trends Analysis

The current state of the sample data is relatively unprocessed, other than through the tracking of constituent results above the 10% and 50% OEL status for existing COPCs. However, WRPS is currently in the process of re-assessing the baseline data acquired. As part of this effort, they are planning the consolidation of the data, in a manner which allows for the assessment of both the statistical approach to be used in a re-characterization of potential exposures and in the identification of data gaps. This effort will in turn, drive the number and location of additional screening and routine monitoring efforts. The methodology will reportedly be developed in conjunction with an independent expert IH panel.

There is an ongoing effort to consolidate data and assimilate upward or downward trends in other IH program elements such as hearing conservation, non-ionizing radiation, heat stress, cold stress, and ergonomics. It is noteworthy that WRPS IH managers and staff appear to agree per interviews, that the vapor control program has monopolized their resources and there is some frustration that: 1) they have exceeded industry standards in addressing the concern; 2) there is no serious vapor health threat; and 3) other programmatic areas of need are not being addressed as they would prefer.

Example of WRPS Sampling Strategy under consideration

Frequency of sampling (low-high)

Carcinogen	H	H	H
Highly Toxic	M	H	H
Irritant	L	M	H

% of OEL----------›

3.4.2 The Role of Professional Judgment

WRPS points out that it maintains a high caliber of staff and that professional judgment is a necessary element to the program. In the factual accuracy response, WRPS states: "The American Conference of Governmental Industrial Hygienists and the American Board of Industrial Hygiene both recognize that professional industrial hygienists must evaluate data and information and make professional judgments."

ORP recognizes not only the value, but the necessity of professional judgment - particularly in the event of off normal operations. Such judgments is based not only on training and experience, but also on baseline programmatic guidelines that have been reviewed, approved, and incorporated into the programmatic foundation of the health and safety program. It is neither feasible nor desirable to attempt to dictate directives for variables that occur with environmental and operational dynamics. However, the fundamental methods in which decisions will be made, in a consistent, defensible mode is essential to the credibility of the program. As an example, NIOSH, arguably the international subject matter expert on respiratory devices devotes 41 pages to the process

of respirator selection in the "NIOSH Guide to Industrial Respiratory Protection." A professional judgment is required in the understanding and application of this document. However, the narratives, checklists and flow charts are provided to "insure uniformity and adherence" to established methods established jointly by NIOSH and the Occupational Safety and Health Administration (OSHA). Similar guides, established as industry standards are available for the selection of CPC, eye protection and other PPE elements. All of these guides require professional judgment in the application process, with respect to the vast mixture of COPCs and environmental conditions. What is missing from WRPS is clearly stated policies with respect to: 1) the need; 2) the application; 3) WRPS inventory or options available; and 4) standard methods for decision making.

ORP acknowledges that WRPS has some elements of the selection process incorporated into programmatic documents, such as a discussion of the service life of respirator cartridges and an extensive study on the application of silver shield® gloves and mercury exposure. Yet, there are major elements missing and most importantly, no standard means of directing the use of those elements in a cohesive fashion, and there is no defined process for documenting the basis for the decisions made in the absence of standard methodologies.

The same is true with respect to broad range DRIs. Table 1 of the "Monitoring for COPC in Tank Farm Vapors" list instruments that respond to multiple COPCs, but does not address the means of discriminating amongst those with very low TLVs and those that have high TLVs. There appears to be a mandate for utilizing detector tubes for some, and broad range instruments such as the TVA and ppbRAE for others. Some COPCs appear to be monitored by either option. The argument of utilizing professional judgments for the selection of instruments is only defensible, in the presence of a sound technical basis, which provides each IH with the pre determined range, sensitivity, correction factors and unknowns associated with the DRI table. To assume that each IH has performed this task independently in a correct, consistent manner and maintains the basis for the decision logic is not prudent. In addition, there is no evidence to suggest that such factors and thought process, are in turn, documented with each work instruction or operational document.

The level of effort required to either: 1) provide pre established decisions for PPE and DRIs for the waste and condensate per Tank farm; or 2) to provide decision logic directly, with the aid of internet links is minimal. To have this fundamental element absent from both a written PPE plan and sampling strategy plan is not the industry norm.

4.0 CONCLUSIONS

4.1 Positive observations and trends

- The breadth and detail of most programmatic WRPS IH documents is very good.
- The effort on evaluating baseline chemical hazards has been very advanced.

- The program for control, conveyance, and management of sampling data appears to be exceptional.

- The WRPS Staff offers considerable experience, held to high qualification standards, self-confident and professional.

- The WRPS IH related instrumentation, data base, and overall resources are exceptional.

- WRPS is upgrading risk communication process, including the use of outside subject matter experts.

- WRPS is pro actively supporting an independent panel for additional vapor monitoring and control considerations.

- WRPS is reportedly improving worker access to material safety data sheets through the establishment of an electronic on-line Material Safety Data Sheets program. This action appears to be prompted by two observations that result from the WRPS self-assessment, finalized on January 19, 2009.

4.2 Opportunities for Improvement

- The compendium of IH Information and directives could be consolidated for IH and workers, in a manner more easily acquired and understood.

- WRPS should incorporate exposure characterization and control goals and objectives into the IH technical basis.

- WRPS should define the range for professional judgment within the IH program to a reasonable extent within the technical basis documents.

- WRPS should review and evaluate worker occupational illness reporting as an element of the hazard identification and assessment process, per 10 CFR 851.21(7) and 10 CFR 851.26 94)(b). The consideration of reported target organ or systemic effects and related causative agents within the tank farm may be an important added element of the IH strategy. The overall goal of the compliance with this requirement being the evaluation of reports in a manner which allows reconsideration of the effectiveness of current protective measures with regards to the monitoring and control strategy. For example, in the event that asthma and related reactive airways disease is identified as a complaint of tank farm workers and recognizing that formaldehyde [a COPC] has a causal link to asthma, special consideration may then be directed at increasing the nature and frequency of formaldehyde monitoring.

4.3 Assessment Follow-up Items

As part of a future assessment (Phase II), actual field implementation of the documented WRPS IH program will be evaluated with special emphasis on:

- Observations of IH Technicians going through re-qualification or initial qualification, actual sampling (source, personnel, or area) and processing of sample media for laboratory analysis and execution of the Work Instructions/Job Hazard Analysis (TFC-ESHQ-S_SAF-C-02, "Job Hazard Analysis," Revision D-5). The IH Professionals qualification card process consists mostly of required reading with some actual case studies like assigning DRIs and sample data analysis.

- Per several months of observation, formal interviews, and review of one off-normal event (702-AZ); there is a general concern that the prevailing opinion within the WRPS IH department, that Tank Farm static chemical vapor and condensate exposures are fully characterized and controlled, is having negative impacts the degree of WRPS vigilance in anticipating, preparing for, and responding to off-normal events and secondarily, assessments of new or improved control measures. As part of Phase II the assessors will perform field assessment of drills for off-normal waste release and actual should any should occur.

- The process of decision making in regards to PPE and instrumentation shall be closely evaluated.

- The monitoring, controls and associated documentation of off-normal event decision making.

- The effectiveness of the sample and data quality assurance process.

- The nature of the safety culture within WRPS.

5.0 FINDINGS AND OBSERVATIONS

5.1 Findings

A-09-ESQ-TANKFARM-001-F01: Contrary to requirements WRPS has not established and implemented programmatic procedures which evaluate and introduce new technologies into the WRPS ESH&Q Assurance group, nor IH program. WRPS has clear evidence that portions have been made, such as the addition of upgraded IH instrumentation. A formal and concerted effort to periodically evaluate new technologies for worker health and safety is an important, but missing feature of this high end health and safety program.

Requirements:

29 CFR 1910.120(p)(5), "New Technology Program" The employer shall develop and implement procedures meeting the requirements of paragraph (o) of this section for introducing new and innovative equipment into the workplace.

1910.120(o)(1): The employer shall develop and implement procedures for the introduction of effective new technologies and equipment developed for the improved protection of employees working with hazardous waste clean-up operations, and the same shall be implemented as part of the site safety and health program to assure that employee protection is being maintained.

1910.120(o)(2): New technologies, equipment, or control measures available to the industry, such as the use of foams, absorbents, neutralizers, or other means to suppress the level of air contaminants while excavating the site or for spill control, shall be evaluated by employers or their representatives. Such an evaluation shall be done to determine the effectiveness of the new methods, materials, or equipment before implementing their use on a large scale for enhancing employee protection. Information and data from manufacturers or suppliers may be used as part of the employer's evaluation effort. Such evaluations shall be made available to OSHA upon request.

Discussion:

WRPS has not established and implemented programmatic procedures which evaluate and introduce new technologies into the WRPS ESH&Q Assurance group, nor IH program. There is clear evidence efforts have been made, such as the addition of upgraded IH instrumentation. However, given the history of the tank farm vapor exposure monitoring & controls challenges and the history of abnormal events, a formal and concerted effort to periodically evaluate new technologies for worker health and safety is an important, but missing feature of this high end health and safety program.

A-09-ESQ-TANKFARM-001-F02: Contrary to requirements WRPS has not established written, comprehensive decision logic for the selection and use of PPE. WRPS has developed risk assessment documents, as well as a respiratory protection plan and PPE plan. However, there are no defined action levels and selection criteria available for review for respiratory protective equipment, CPC, nor chemical protection of the eyes; and there is no element that addresses the selection process or protocol of use for an emergency response.

Requirements:

29 CFR 1910.132(d): Hazard assessment and equipment selection.

29 CFR 1910.132(d)(1): The employer shall assess the workplace to determine if hazards are present, or are likely to be present, which necessitate the use of PPE. If such hazards are present, or likely to be present, the employer shall:

29 CFR 1910.132(d)(1)(i): Select, and have each affected employee use, the types of PPE that will protect the affected employee from the hazards identified in the hazard assessment;

29 CFR 1910.132(d)(1)(ii): Communicate selection decisions to each affected employee;

29 CFR 1910.132(d)(2): The employer shall verify that the required workplace hazard assessment has been performed through a written certification that identifies the workplace evaluated; the person certifying that the evaluation has been performed; the date(s) of the hazard assessment; and, which identifies the document as a certification of hazard assessment.

29 CFR 1910.134(c) (1): In any workplace where respirators are necessary to protect the health of the employee or whenever respirators are required by the employer, the employer shall establish and implement a written respiratory protection program with worksite-specific procedures... The employer shall include in the program the following provisions of this section, as applicable:

29 CFR 1910.134(c)(1)(i): Procedures for selecting respirators for use in the workplace;

29 CFR 1910.120(p)(8): Elements of an emergency response plan. The employer shall develop an emergency response plan for emergencies which shall address, as a minimum, the following areas to the extent that they are not addressed in any specific program required in this paragraph.

29 CFR 1910.120(p)(8)(ii)(K): PPE and emergency equipment (other items not included).

Discussion:

WRPS has developed risk assessment documents, as well as a respiratory protection plan and PPE plan. However, there are no defined action levels and selection criteria available for review for respiratory protective equipment, CPC, nor chemical protection of the eyes; and there is no element that addresses the selection process or protocol of use for an emergency response. In addition, there is an absence of service life criteria for CPC. The absence of a decision process or a documented, designated CPC material extends beyond the chemical oriented elements of the program and includes a deficiency in the Bloodborne Pathogen Exposure Control Plan. These items are of the most basic type of information to be made available to workers through the written safety and health program. A number of IH documents make reference to consulting the IH, deferring to the IH "professional judgment."

A-09-ESQ-TANKFARM-001-F03: There is a lack of specified criteria in the selection of direct reading air monitoring instrumentation and interpretation of results. There is an absence of specific methodology on the selection and interpretation of nine or more different DRI used to monitor for the acute hazard of COPC. Such DRI warrant both clear decision logic for selection and instructions of interpretation relative to other instrument readings. The results associated with the lack of written guidance and criteria was manifested in the WRPS response to the 222-S methylene chloride spill, in which the 10.6 ev Photoionoization

detector was used in error, as the basis for the release of the work area. The manufacturer's literature clearly identifies that this instrument does not detect a chemical such as methylene chloride, which has an ionization potential higher than 10.6 ev.

Requirement:

10 CFR 851.21, "Hazard Identification and Assessment"

(a) Contractors must establish procedures to identify existing and potential workplace hazards and assess the risk of associated workers injury and illness. Procedures must include methods to: Assess worker exposure to chemical, physical, biological, or safety workplace hazards through appropriate workplace monitoring;

Discussion:

Despite considerable attention to COPC, air monitoring strategies, and instrument operation, there is an absence of specific methodology for the selection and interpretation of the nine or more different DRI used to monitor for the acute hazard COPC (as listed in EH-06-004). Selection and data interpretation of some DRI such as the use of the iTX ammonia meter for ammonia measurement is self-evident. However, other DRI such as the ppbRAE, the Miran 205B, and the TVA-1000 respond to multiple chemicals at different sensitivities and react to multiple interfering compounds. Such DRI warrant both clear decision logic for selection and instructions of interpretation, relative to other instrument readings. In addition, there is no direction provided for the use of detector tubes with regard to the same. Such reliance on "Professional Judgment," at this significant level of decision making creates the potential for errors, departmental inconsistency, an absence of written documentation, and an inability to audit program performance against standardized procedures.

A-09-ESQ-TANKFARM-001-F04: There is an absence of written direction to incorporate the mandated goal of reducing worker exposure to carcinogens and all chemicals to levels ALARA, below the TLV.

Requirements:

10 CFR 851, 10 CFR 851.21, and 10 CFR 851.23 The 2005 ACGIH TLV booklet states "...carcinogens, worker exposure by all routes should be carefully controlled to levels as low as possible, below the TLV"

10 CFR 851.21(4), "Hazard Identification and Abatement," that the "contractor must analyze designs of new facilities and modifications to existing facilities and equipment for potential workplace hazards" and 10 CFR 851.22, "Hazard Prevention and Abatement," contractors must establish and implement a hazard prevention and abatement to ensure...

DOE Standard 1189-2008, "Integration of Safety into the Design Process" – Section 7.10, "Hazardous Material," similar to radiological hazards, DOE requirements invoke an ALARA concept for the protection of workers from hazardous materials. Design should support the

primary objective of reducing the frequency, severity, and cost of incidents involving hazardous material, as well as the cost of hazardous operations. Prevention practices, such as substitution of less hazardous materials in a project or design of a process to reduce generations of hazardous waste, should be examined prior to consideration of protection strategies. Protection strategies will generally involve confinement strategies, such a gloveboxes, piped systems, and tanks, as well as administrative controls. The approach will typically be driven by the magnitude of the hazard and inventory. Similar to radiological hazards, DOE requirements invoke an ALARA concept for the protection of workers from hazardous materials.

DOE-STD-3009-94, "Preparation Guide for U.S. Department of Energy Non-Reactor Nuclear Facility Documented Safety Analyses," Chapter 8, "Hazardous Material Protection"

8.4 ALARA POLICY AND PROGRAM (DOE-3009-94)

This section summarizes the ALARA policy and program for the facility. Historically, hazardous materials, unlike radioactive materials, have often been evaluated assuming de-minimis level below which little harm is associated with exposures (e.g., OSHA PELs). Where this is the case for given subject matter, ALARA needs to be considered a qualitative concept evaluated against OSHA and IH exposure standards and guidelines.

8.4 ALARA POLICY AND PROGRAM (TF DSA)

The hazardous material protection program ensures that exposures to hazardous materials are below regulatory limits and at a level ALARA. ALARA concepts are employed at the tank farms for hazardous material protection. The goal of ALARA is to reduce the level of hazardous materials and the effects of those materials at the source, and thereby mitigate any effects on workers, the environment, or the public. ALARA also ensures that exposures are kept to the lowest levels and within the limits set by governing authorities (i.e., OSHA PELs, ACGIH TLVs, and DOE directives). Procedures, instructions, and standards ensure exposures are kept to a minimum based on the requirements and provisions of DOE Orders, OSHA regulations, national consensus IH standards, and recommended practices. The IH programs pertaining to hazardous material protection at the Tank Farm Contractor (TFC) facilities utilize elimination/substitution of materials, engineered controls and features, administrative controls, and PPE.

To minimize the use of, and exposure to, hazardous materials, purchase requisitions are reviewed for products that contain or that may result in the production of hazardous chemicals; where possible, less hazardous materials are substituted. In addition, the TFC oversees contractor and subcontractor construction activities at TFC facilities to minimize exposures to hazardous materials through worksite inspections following the requirements of DOE O 440.1A.

5.2 Observations

A-09-ESQ-TANKFARM-001-O01: There is a lack of clear, consolidated information the WRPS IH technical basis is overly complicated and confusing to both workers and outside viewers. There are a number of significant conflicting statements regarding such important elements as PPE and air monitoring requirements. In addition, there are numerous links within key documents that refer the reader to a secondary set of documents, which in turn refer the reader to a tertiary set of documents.

Discussion:

The WRPS IH Technical Basis is overly complicated and confusing to both workers and outside viewers. There are a number of significant conflicting statements regarding such important elements as PPE and air monitoring requirements. In addition, there are numerous links within key documents that refer the reader to a secondary set of documents, which in turn refer the reader to a tertiary set of documents. Another concern is the listing of extensive readings for the implementation of a single IH task of noise dosimetry (TF-OPS-IHT-0015), which states "the following documents may be needed to perform this procedure" then lists 16 major documents, including TLV books, CFR, American National Standards Institute (ANSI) docs, and others.

Assessment Follow-up Items

A-09-ESQ-TANKFARM-001-AFI01: There is a WRPS IH consensus that the tank farms vapor hazards is static and fully characterized, which results in a WRPS IH Departmental mentality that limits vigilant assessment of day-to-day considerations of abnormal events, assessment of new or improved control measures; and interpretation of results. In follow up assessment (Phase II), the following subject areas will be looked at: The nature of the safety culture within WRPS, observations of IH Technicians going through re-qualification or initial qualification, actual sampling (source, personnel, or area), the processing of sample media for laboratory analysis and execution of the Work Instructions/Job Hazard Analysis, field observations of drills for off-normal waste release (and actual should any occur), the monitoring, controls, and associated documentation of abnormal event decision making, and effectiveness of in field sample and data quality assurance process.

6.0 REFERENCES (From DOE Standard IH Practices, DOE-STD-6005-2001 April 2001)

6.1 Government Documents

DOE Directives (Policy, Orders, Handbooks, and Technical Standards)

a. CFR 1910 Part 851 Replacing DOE O 440.1A, Worker Protection Management for DOE Federal and Contractor Employees.

b. DOE O 450.4. Safety Management System Policy.

c. DOE O 450.5. Line Environment, Safety, and Health Oversight.

d. DOE G 440.1-1, Worker Protection Management for DOE Federal and Contractor Employees Guide for Use with DOE O 440.1.

e. DOE G 440.1-2, Construction Safety Management Guide for Use with DOE O 440.1.

f. DOE G 440.1-3, Occupational Exposure Assessment, Implementation Guide for Use with DOE O 440.1.

g. DOE G 440.1-4, Contractor Occupational Medical Program Guide for Use with DOE O 440.1.

h. DOE G 440.1-7, Implementation Guide for Use with DOE N 440.1-7, Interim Chronic Beryllium Disease Prevention Program.

i. DOE Standard 1189-2008, "Integration of Safety into the Design Process."

j. DOE Standard 3009, Preparation Guide for U.S. Department of Energy Non-Reactor Nuclear Facility Documented Safety Analyses

k. GUIDES: DOE G 441.1-2 Occupational ALARA Program Guide

DOE-STD-6005-2001 2 i. DOE O 5480.10A, Contractor IH Program.

- **Other Government Documents**

a. U.S. Department of Labor, OSHA, "Field Inspection Reference Manual."

b. U.S. Department of Labor, OSHA, "Technical Manual."

c. U.S. Department of Labor, OSHA, Title 29 CFR, Part 1910, Occupational Safety and Health Standards, and Part 1926, Safety and Health Regulations for Construction.

d. U.S. Department of Labor, OSHA, Title 29 CFR, Part 1960, Basic Program Elements for Federal Employee Occupational Safety and Health Programs and Related Matters.

6.2 Non-Government Documents

a. ACGIH, "Threshold Limit Values for Chemical Substances and Physical Agents and Biological Exposure Indices" (Latest edition).

b. American Conference of Governmental Industrial Hygienists, "Industrial Ventilation: A Manual of Recommended Practice" (Latest edition).

c. Joseph Damiano and John R. Mulhausen (Editors), "A Strategy for Assessing and Managing Occupational Exposures," 2nd edition. AIHA, Fairfax, VA (1998)

d. Salvatore R. DiNardi, (Editor), "The Occupational Environment. Its Evaluation and Control," AIHA, Fairfax, VA (1997)

e. ANSI, latest version of various standards including, but not limited to:
   1. ANSI Z 88.2, .Respiratory Protection.
   2. ANSI Z 88.6, .Physical Qualifications for Respirator Use.
   3. ANSI Z 117.1, .Safety Requirements for Working in Tanks and Other Confined Spaces.
   4. ANSI Z 136.1, .Safe Use of Lasers.
   5. ANSI Z 358.1, .Emergency Eyewash and Shower Equipment.

f. American Society of Heating, Refrigerating, and Air Conditioning Engineers, "ASHRAE Handbook and Product Directory," volume on Fundamentals.

6.3 Personnel Interviewed

6.3.1 WRPS ESH&Q Safety and Health Manager

6.3.2 WRPS ESH&Q Business Operations Industrial Safety/IH Manager

6.3.3 WRPS ESH&Q Business Operations IH Manager

6.3.4 WRPS SST Retrieval & Closure Safety and IH Manager

6.3.5 WRPS Industrial Hygienists (7 total)

6.3.6 WRPS Industrial Hygiene Technicians (20 total)

6.4 Documents Reviewed

6.4.1 Integrated Environment, Safety, and Health Management System Description for the Tank Operations Contractor, RPP–MP-03

6.4.2 Worker Health and Safety Requirements Implementation Matrix, TFC-ESHQ-S SAF-CD-11

6.4.3 Worker Health and Safety Program, TFC-PLN-47, RPP-27195

6.4.4 Industrial Hygiene Safety Management Program Plan TFC-PLN-55

6.4.5 Tank Operations Contractor Health and Safety Plan TFC-PLN-43, Revision A-12

6.4.6 IH Exposure Assessment Strategy RPP-27195 TFC-PLN-34 R-D-2

6.4.7 Beryllium TFC-PLN 24

6.4.8 ASBESTOS PROGRAM, RPP-MP-625, Revision

6.4.9 Risk Management Plan TFC-PLN-39 Revision C

6.4.10 Emergency Management Program Plan TF-PLN-85

6.4.11 Tank Farm Contractor Training and Qualification Plan TFC-PLN-64

6.4.12 Technical Staff Qualifications Requirements USQ-GCX-2

6.4.13 IH Tech and Qualifications Requirements TFC-BSM-TQ STD-07 RC

6.4.14 Subcontractor Oversight ESH&Q TFC-ESHQ-S_SAF-C-07, Revision B-5

6.4.15 EMPLOYEE JOB TASK ANALYSIS TFC-ESHQ-S_IH-C-17, Revision B-3

6.4.16 IH Deports and Documents (Safety & Health Programs-web page) Dermal Exposure Study & Waste Disturbing Activities Vapor Characterization.

6.2.17 IH Reporting & Records Management TFC-ESHQ-S_IH-C-46

6.2.18 Managing Vapor Control Zones TFC-ESHQ-S_IH-C-48

6.2.19 Chemical Management Process TFC-ESHQ-S_IH-C-47

6.2.20 Industrial Hygiene Alarm Response TFC-ESHQ-S_IH-C-45

6.2.21 TF Chemical Exposure Hazard Analysis (Safety & Health Programs-web page)

6.2.22 Exposure Monitoring, Reporting, and Records Management TFC-ESHQ-IH-STD-03

6.2.23 Industrial Hygiene Response to Vapor Concerns TFC-ESHQ-IH-STD-09

6.2.24 Industrial Hygiene Equipment Management TFC ESQC_H- S PI 11

6.2.25 Industrial Hygiene Response to Employee Contact with Chemical Waste TFC-ESHQ-IH-STD-10

6.2.26 Industrial Hygiene Chemical Vapor Technical Basis RPP-22491, R1

6.2.27 Tank Waste Dermal Exposure Assessment RPP-34147, R O

6.2.28 Concentrations of Chemicals of Potential Concern in Water and Organic Condensates PRR-RPT-24794, R 1

6.2.29 Respirator Issuance and Control ProcessesTFC-ESHQ-S_IH-CD-05.1

6.2.30 Personal Protective Equipment TFC-ESHQ-S_IS-C-02

6.2.31 Blood borne Pathogen Exposure Control Standard TFC-ESHQ-S-24

6.2.32 INDUSTRIAL HYGIENE INSTRUMENT ALARM RESPONSE TFC-ESHQ-S_IH-C-45, Revision A-1

6.2.33 Response to Reported Odors or unexpected Changes to Vapor Conditions, TF Abnormal Operating Procedures:

6.2.34 Evaluation and Procurement of Industrial Hygiene Monitoring Instruments TFC-ESHQ-S_IH-CD-38

6.2.35 3M Breathe Easy Powered Air Purifying Respirator Test and Maintenance TFC-ESHQ-S_IH-D-05.2

6.2.36 MSA OptimAir 6A Powered Air Purifying Respirator Test and Maintenance TFC-ESHQ-S_IH-D-05.3

6.2.37 Using the TVA 1000B Toxic Vapor Analyzer TFC-ESHQ-S_IH-D-25

6.2.38 Tank Vapor Source Monitoring TFC-ESHQ-S_IH-D-27

6.2.39 Permit Required Confined Space TFC-ESHQ-S_IH-C-04, Revision C-2

6.2.40 MIRAN 205B Series SapphIRe Instrument OperationTFC-ESHQ-S_IH-D-32

6.2.41 Noise Surveys, Dosimetry, and Octave Band AnalysisTFC-ESHQ-S_IH-D-34

6.2.42 Hazard CommunicationTFC-ESHQ-S_IH-C-02

6.2.43 COC and Submitting Samples for Laboratory Analysis TFC-ESHQ-S_IH-P-10

6.2.44 Ergonomics TFC-ESHQ-S_IH-STD-03

6.2.45 Cold Stress TFC-ESHQ-IH-STD-01

6.2.46 Heat Stress Control TFC-ESHQ S IH C -07

6.2.47 Laser Safety and Nonionizing Radiation TFC-ESHQ-IH-STD-02

6.2.48 Asbestos Control - Facility Management/General Industry TFC-ESHQ-IH-STD-04

6.2.49 Hearing Conservation Program TFC-ESHQ-IH-STD-06

6.2.50 Lead Control Program TFC-ESHQ-IH-STD-08

6.2.51 Carcinogen Control TFC-ESHQ-IH-STD-11

6.2.52 Industrial Hygiene Monitoring and Control Strategies During Tank Retrieval and Transfers TFC-ESHQ-IH-STD-12

6.2.53 Illumination TFC-ESHQ-IH-STD-13

6.2.54 IHT Flammable Gas Surveillance on Double Shell Tanks TF-OPS-IHT-00

6.2.55 Perform IHT Flammable Gas Surveillance on Single Shell Tanks TF-OPS-IHT-002

6.2.56 Preparation and Field Use of Multi-Gas Monitor Model TMX412 TF-OPS-IHT-003

6.2.57 Preparation and Field Use of iTX Multi-Gas Monitor and iSP Motorized Sampling Pump TF-OPS-IHT-004

6.2.58 Preparation and Field Use of the ppbRAE Volatile Organic Compound Monitor TF-OPS-IHT-005

6.2.59 Preparation and Field Use of Drager Accuro and Accuro 2000 Pump and Colorimetric Indicator TF-OPS-IHT-006

6.2.60 Using DRIs TF-OPS-IHT-007

6.2.61 Using The Sper Scientific Light Meter TF-OPS-IHT-008

6.2.62 IH Pump Preparation and field Use for Personal-Area Air Monitoring TF-OPS-IHT-009

6.2.63 Field Wipe Sampling and Bulk Sampling Methods TF-OPS-IHT-0010

6.2.64 Preparation and Field Use of the AreaRAE Multi-Gas Monitor TF-OPS-IHT-0011

6.2.65 Preparation and Field Use of the QUESTemp 15 and QUESTemp 32 Heat Stress Monitors TF-OPS-IHT-0012

6.2.66 Preparation and Field Use of the Lumex Ra-915+ Mercury Vapor Analyzer TF-OPS-IHT-0014

6.2.67 Preparation and Field Use of the Quest Q300 Noise Dosimeter and 2900 Sound Level Meter TF-OPS-IHT-0015

6.2.68 Preparation and Field Use of the Manning EC-P2 Ammonia Monitor TF-OPS-IHT-0016

6.2.69 Performance Indicators (H&S Web)

6.2.70 IH Exposure Assessment strategy TFC PLN-34, Revision D-2, Section 3.4

6.2.71 WRPS Health and Safety Tool Box Web Page: multiple fact sheets, data sheets, information sheets, analysis and reports.

APPENDIX A – PRINCIPAL DOCUMENT REVIEW AND COMMENTS

Document Title	Document Identifier	Comments
PRIMARY DOCUMENTS		
Integrated Environment, Safety, and Health Management System Description for the Tank Operations Contractor	RPP –MP-03	Baseline ISM
Worker Health and Safety Requirements Implementation Matrix	TFC-ESHQ-S_SAF-CD-11	-Excellent tool.
Worker Health and Safety Program	TFC-PLN -47 RPP-27195	-Does not address New Technology Program -Organizational Roles and Responsibilities element is difficult to access -Medical Surveillance Program is vague
Industrial Hygiene Safety Management Program Plan	TFC-PLN-55	-Calls for a target of 3 IH field Inspections per week -No new technology review process -No element of metrics or corrective action elements
Chemical Hygiene Plan		To be addresses as part of the ATL assessment
Tank Operations Contractor Health and Safety Plan	TFC-PLN-43, REV A-12	-Scope is to be "compliant with 29 CFR 1910.120" -Scope includes (…"facility workers protected from unplanned releases of radioactive and hazardous materials)" -Unsuccessful in accessing WRPS Org Chart via cited web link -Does not address New Technology Program -Document contains cited links and over 200 secondary links contained in those documents - 4.2.1 No discussion of administrative controls -4.6 BBP program is non compliant (see that line item) -6.0 Contamination Control is radiation oriented no direction on chemical decontamination? - Medical surveillance does not address IH interactions with Medical contractor following uncontrolled exposures (EJTA is primary tool for ongoing surveillance).
IH Exposure Assessment Strategy	RPP-27195 TFC-PLN-34 R D-2	Lacks specific methodologies and decision making for use of DRIs, despite general directives provided.
Beryllium	TFC-PLN 24	Previously approved.
ASBESTOS PROGRAM	**RPP-MP-625, REV**	Effective.
Risk Management Plan	**TFC-PLN-39, REV C December 3, 2008**	-No discussion of Engineering control assessments, administrative control efficiency, PPE usage impacts, review of new technologies or future assessment strategies.
Emergency Management Program Plan	TF-PLN-85	Does not address all 29 CFR 1910.120 line items
Staff Qualifications		
Tank Farm Contractor Training and Qualification Plan	TFC-PLN-64	Applicable to all TOC personnel, General in nature
Technical Staff Qualifications Requirements	USQ-GCX-2	IH quals well addressed.
IH Tech Training and Qual Requirements	TFC-BSM-TQ STD-07 R C	-Calls for 2 yr degree + 1 yr experience & Basic in-house IH course, -Does not discuss IHT --Lead Quals -Does not address IH Equipment Custodian Quals
Subcontractor Oversight	**ESH&Q□TFC-ESHQ-S_SAF-C-07, REV B-5□**	**It is unclear as to who will provide the IH support, There are no minimal quals stated for H&S subs**
EMPLOYEE JOB TASK ANALYSIS	**TFC-ESHQ-S_IH-C-17, REV B-3**	**This is the key link in the Medical Surveillance Program within the TOC HASP. Does not address overexposure medical surveillance issues.**
IH Management Elements		
IH Deports and Documents	**Safety & Health**	Excellent resource

- **Dermal Exposure Study** - Waste Disturbing Activities Vapor Characterization.	**Programs-web page**	**- Dermal Exposure Study** - **Dedicated to demonstrating that Silver shield CPC is not warranted for listed TF work.** -Waste Disturbing Activities Vapor Characterization Report
IH Reporting & Records Management	**TFC-ESHQ-S_IH-C-46**	Overall, good document
Managing Vapor Control Zones	**TFC-ESHQ-S_IH-C-48**	Appears to be a very good tool, ties to the TVIS and the CHAD s.
Chemical Management Process	**TFC-ESHQ-S_IH-C-47**	- Not Hazwaste related
Industrial Hygiene Alarm Response	**TFC-ESHQ-S_IH-C-45**	IHT or IH: "Evaluate the cause and determine the need for additional actions" – no decision tree or directives for stop work, etc.
TF Chemical Exposure Hazard Analysis	**Safety & Health Programs-web page**	-Overall, very good risk characterization summaries in similar format for multiple tanks and operations. Use of comparable operations is useful. *T Farm breather filter change out: No need for a vapor control zone and monitoring is limited to ammonia and VOCs: However, WRPS has 1) Provided a list of chemicals in condensate (Hg, nitrosamines, etc) & 2) Stated that filters trap semi vols ?
Exposure Monitoring, Reporting, and Records Management	**TFC-ESHQ-IH-STD-03**	Exceeds OSHA retention of exposure records (75 yrs)
Industrial Hygiene Response to Vapor Concerns	**TFC-ESHQ-IH-STD-09**	Very good overall approach, but cited instruments and techniques are limited in scope?
Industrial Hygiene Equipment Management	**TFC ESQC _H- S PI 11**	Good Directive.
Industrial Hygiene Response to Employee Contact with Chemical Waste	**TFC-ESHQ-IH-STD-10**	"All hazard and facility/area information will be provided to the Occupational Medicine Contractor and the shift manager". What, where, How and when?
Technical Documents		
Industrial Hygiene Chemical Vapor Technical Basis	**RPP-22491, R1**	-Excellent effort, subject to some change per WRPS and HC interactions
Tank Waste Dermal Exposure Assessment	**RPP-34147 Revision 0**	- Excellent Element of Tech Basis- Advance level work -liquid has a pH of 13, yet document only calls for safety glasses, as does the PPE plan below. -Conclusion is unclear with respect to CPC requirements.
Concentrations of Chemicals of Potential Concern in Water and Organic Condensates	**PRR-RPT-24794, R 1**	-Excellent Study and characterization
Respirator Issuance and Control Processes	**TFC-ESHQ-S_IH-CD-05.1**	Effective.
Personal Protective Equipment	**TFC-ESHQ-S_IS-C-02**	-lacks discussion of decision logic for CPC selection &, service life -Indicates that corrosive materials are cause for protection, but the text only addresses impact protection, not splash protection?
Blood borne Pathogen Exposure Control Standard	**TFC-ESHQ-S-24**	- does not define type of Gloves -Refers only to "masks" as respiratory protective equipment
INDUSTRIAL HYGIENE INSTRUMENT ALARM RESPONSE	**TFC-ESHQ-S_IH-C-45, REV A-1**	IHT or IH: "Evaluate the cause and determine the need for additional actions".
Response to Reported Odors or unexpected Changes to Vapor Conditions	**TF Abnormal Operating Procedures:**	IH to collect grab sample for GC/MS Real time monitoring is VOC and ammonia
Evaluation and Procurement of Industrial Hygiene Monitoring Instruments	**TFC-ESHQ-S_IH-CD-38**	- No discussion of new technology reviews, but very good element of such a process.
3M Breathe Easy Powered Air	**TFC-ESHQ-S_IH-D-**	Effective.

Purifying Respirator Test and Maintenance	**05.2**	
MSA OptimAir 6A Powered Air Purifying Respirator Test and Maintenance	**TFC-ESHQ-S_IH-D-05.3**	Effective.
Using the TVA 1000B Toxic Vapor Analyzer	**TFC-ESHQ-S_IH-D-25**	-No discussion of COPC that are detected by PID/FID or sensitivity/ correction factors
Tank Vapor Source Monitoring	**TFC-ESHQ-S_IH-D-27**	Very general, no techniques described.
Permit Required Confined Space	**TFC-ESHQ-S_IH-C-04, REV C-2**	N o comments.
MIRAN 205B Series SapphIRe Instrument Operation	**TFC-ESHQ-S_IH-D-32**	Very good. Note format varies with different instruments.
Noise Surveys, Dosimetry, and Octave Band Analysis	**TFC-ESHQ-S_IH-D-34**	Excellent.
Hazard Communication	**TFC-ESHQ-S_IH-C-02**	Unclear as to what hazard index is used for labeling; HMIS?
Chain of Custody and Submitting Samples for Laboratory Analysis	**TFC-ESHQ-S_IH-P-10**	Good.
Ergonomics	**TFC-ESHQ-S_IH-STD-03**	Sound. Cites TLV Booklet for primary direction. See Also: **TANK FARMS GENERAL INDUSTRIAL SAFETY HAZARDS ANALYSIS** **See Also Ergonomics H&S web page**
Cold Stress	**TFC-ESHQ-IH-STD-01**	Effective.
Heat Stress Control	**TFC-ESHQ S IH C -07**	Good, comprehensive.
Laser Safety and Nonionizing Radiation	**TFC-ESHQ-IH-STD-02**	No comment.
Asbestos Control - Facility Management/General Industry	**TFC-ESHQ-IH-STD-04**	29 CFR 1910.1001(l), *Medical Surveillance* requires a specific pre-placement examination before an employee can be designated as an asbestos worker but TFC-ESHQ-IH-STD-04, *Asbestos Control – Facility Management/General Industry* does not document how these pre-placement requirements are transmitted to the occupational medical office or verified to have been met before placement.
Asbestos Control - Construction Industry	**TFC-ESHQ-IH-STD-05**	No comments
Hearing Conservation Program	**TFC-ESHQ-IH-STD-06**	29 CFR 1910.95(g)(10) defines a standard threshold shift as a change in hearing threshold relative to the baseline audiogram of an average of 10 dB or more at 2000, 3000, and 4000 Hz or greater in either ear. Contrary to this TFC-ESHQ-IH-STD-06, *Hearing Conservation Program*, Revision A, Dated October 28, 2004 list the determining standard threshold shift that is an average of 25 dB or greater at 2000, 3000, and 4000 Hz in either or both ears for written notification to an employee.
Lead Control Program	**TFC-ESHQ-IH-STD-08**	29 CFR 1910.1025(e)(4), *Mechanical Ventilation* requires effectiveness check of at least every three months and within five days of any change that may result in a change in employee exposure to lead. Contrary to this TFC-ESHQ-IH-STD-08, *Lead Control Program* (section 3.3.3, *Mechanical Ventilation*) omits the effectiveness check requirement.
Carcinogen Control	**TFC-ESHQ-IH-STD-11**	29 CFR 1910.1003 (c)(2)(ii) requires for the listed carcinogens within a regulated area, authorized employees upon exit wash the hands, forearms, face, and neck upon each exit. Contrary to this TFC-ESHQ-IH-STD-11, *Carcinogen Control* (Step 10) only identifies the action of washing but is non-specific on body section or upon each exit of the regulated area. 29 CFR 1910.1003(e)(1)(ii)requires a specific sign at entrances to regulated areas containing operations covered by paragraph (c)(5). Contrary to this TFC-ESHQ-IH-STD-11, *Carcinogen Control* (Step 8) does provide the specific signage as the referenced section requires.
Industrial Hygiene Monitoring and Control Strategies During Tank Retrieval and Transfers	**TFC-ESHQ-IH-STD-12**	Requires updating: This February, 2005 document discusses pending, future policies not yet addressed.
Illumination	**TFC-ESHQ-IH-STD-13**	-consistent with 29 CFR 1910.120 M (illumination)
IHT Flammable Gas Surveillance on	**TF-OPS-IHT-001**	-Good record keeping tools, no mention of calibration or correction factors if warranted.

Double Shell Tanks		
Perform IHT Flammable Gas Surveillance on Single Shell Tanks	**TF-OPS-IHT-002**	-Good record keeping tools, no mention of calibration or correction factors if warranted.
Preparation and Field Use of Multi-Gas Monitor Model TMX412	**TF-OPS-IHT-003**	Excellent. Note: No discussion of LEL corrections.
Preparation and Field Use of iTX Multi-Gas Monitor and iSP Motorized Sampling Pump	**TF-OPS-IHT-004**	Effective.
Preparation and Field Use of the ppbRAE Volatile Organic Compound Monitor	**TF-OPS-IHT-005**	Very Good (=/- 10% of bump gas acceptable) No discussion of PID lamp or range, sensitivities or applications.
Preparation and Field Use of Drager Accuro and Accuro 2000 Pump and Colorimetric Indicator	**TF-OPS-IHT-006**	Excellent. Do not understand pump application in text?
Using Direct Reading Instruments	**TF-OPS-IHT-007**	-Overall, good document. - No discussion of COPC that are detected by PID/FID or sensitivity/ correction factors
Using The Sper Scientific Light Meter	**TF-OPS-IHT-008**	Good.
Industrial Hygiene Pump Preparation and field Use for Personal-Area Air Monitoring	**TF-OPS-IHT-009**	Effective.
Field Wipe Sampling and Bulk Sampling Methods	**TF-OPS-IHT-0010**	Effective.
Preparation and Field Use of the AreaRAE Multi-Gas Monitor	**TF-OPS-IHT-0011**	Effective. Good detail.
Preparation and Field Use of the QUESTemp 15 and QUESTemp 32 Heat Stress Monitors	**TF-OPS-IHT-0012**	Effective.
Preparation and Field Use of the Lumex Ra-915+ Mercury Vapor Analyzer	**TF-OPS-IHT-0014**	Effective. Mode of technology absent.
Preparation and Field Use of the Quest Q300 Noise Dosimeter and 2900 Sound Level Meter	**TF-OPS-IHT-0015**	This procedure states the "the following documents may be need to perform this procedure" then lists 16 major documents, including TLV books, CFRs, ANSI docs, etc . This is an unrealistic burden to place on IHTs!
Preparation and Field Use of the Manning EC-P2 Ammonia Monitor	**TF-OPS-IHT-0016**	Unclear as to how an IHT's calibration (if necessary) is accounted for on sticker and records?
Metrics		-
Performance Indicators	**H&S Web**	Good metrics, but limited to subject matter - Lab turn around data - Tracking of # of samples
Industrial hygiene Exposure Assessment Strategy	**TFC-PLN-34, REV D-2 Section 3.4**	-Discusses SEGs -number of exposures below 10% of OELs -Number of exposures greater then 50% of the OEL -Recommendations for SEG revisions or EAS improvements
Tertiary Documents		

Procedural Items	LCO 3.2.3 SST 241-B-203/B-204 Passive Ventilation Sys **Tank Farm DSA Requirements Implementation Matrix** **AC 5.8 Emergency Preparedness** **AC 5.10 Flammable Gas Control** **LCOS: ventilation, Flammable Gas Concentrations**	No Comments
MSDS	**Safety & Health Programs-web page**	Appears to be a sound system of electronic MSDS access.
TANK VAPOR INFORMATION SHEETs	**Safety & Health Programs-web page**	- Dermal Protection outlines those tanks that do not call for silver shield. This does not clarify what CPC, if any, is warranted, nor does it address corrosive element. - Monitoring for COPC's (Chemicals of Potential Concern) Good element to the Exposure Assessment Strategy, as applied to A tank farm only. However, narrative states: " Direct reading instruments (DRI) are used to monitor for COPC that may cause immediate acute effects, such as irritation." However, the list of 8 chemicals that are monitored by DRIs does not include some other COPCs that appear to offer acute effects such as furan? - Health Effects of Chemicals of Potential Concern – good Hazard Communication tool for hazwaste consitutents. - Odor Thresholds – good reference.

washington river protection solutions | PO Box 850
Richland, WA 99352

June 11, 2009 WRPS-0901072 R1

Mr. J. C. Poniatowski, Contracting Officer
U.S. Department of Energy
Office of River Protection
Post Office Box 450
Richland, Washington 99352-0450

Dear Mr. Poniatowski:

CONTRACT NO. DE-AC27-08RV14800 – WASHINGTON RIVER PROTECTION SOLUTIONS LLC RESPONSE TO PHASE 1, INDUSTRIAL HYGIENE TECHNICAL BASIS ASSESSMENT A-09-ESQ-TANKFARM-001, "WASHINGTON RIVER PROTECTION SOLUTIONS LLC CORRECTIVE ACTION PLAN"

Reference: Letter, J. C. Poniatowski, ORP, to J. M. Armstead, WRPS, "Contract No. DE-AC27-08RV14800 – Approval of Extension to the Washington River Protection Solutions LLC (WRPS) Response to Results of Assessment A-09-ESQ-TANKFARM-001," 09-ESQ-175/0901072, dated May 20, 2009.

This letter transmits Washington River Protection Solutions LLC (WRPS) response to the U.S. Department of Energy, Office of River Protection (ORP) assessment A-09-ESQ-TANKFARM-001, Phase I, "Industrial Hygiene Technical Basis." ORP requested a response from WRPS by May 16, 2009, and WRPS was granted an extension to June 15, 2009 in the referenced letter. There were four findings and one observation identified in the assessment report. Enclosed is the WRPS Corrective Action Plan (CAP) that addresses these findings.

Per our commitment to ensure that the highest standards of performance continues, the enclosed Corrective Action Plan addresses the corrective actions taken by WRPS to control or remove any adverse impact from the non-compliant condition, corrective actions taken to identify the extent of condition, and corrective actions taken to correct the causes, and prevent further findings, and the date when all corrective actions will be completed. The corrective actions outlined in the enclosed CAP have been discussed with Ms. S. J. Olinger, Ms. S. L. Charboneau, and Messrs. W. J. Taylor, K. A. Hoar, and R. L. Urie of your staff.

At a meeting on June 5, 2009, Ms. S. J. Olinger directed WRPS to respond to the observation. WRPS is requesting 45 days from the date of this letter to provide a response to the observation.

If you have any questions, please contact me at 372-9168, or Mr. D. T. Tuckness, Worker Safety and Health Manager, at 373-9920.

Sincerely,

(Signature Attached)

J. M. Armstead
Contracts Manager

MWJ:KMR

Enclosure: Corrective Action Plan - Washington River Protection Solutions LLC Response to Phase 1, Industrial Hygiene Technical Basis Assessment A-09-ESQ-TANKFARM-001 (15 pages)

cc: ORP Correspondence Control
S. E. Bechtol, ORP
S. L. Charboneau, ORP
K. A. Hoar, ORP
S. C. Johnson, ORP
S. J. Olinger, ORP
M. R. Moreno, ORP
W. J. Taylor, ORP
M. J. Urie, ORP

WRPS Correspondence Control
J. C. Allen-Floyd, WRPS
F. Beranek, WRPS
J. A. Caldwell, WRPS
T. M. Jennings, WRPS
G. J. Johnson, WRPS
W. J. Johnson, WRPS
M. W. Jones, WRPS
S. M. Sax, WRPS
B. R. Thomas, WRPS
D. T. Tuckness, WRPS

Electronically Approved by:

UserName: Armstead, Mike (h0525980)
Title: Prime Contract Manager
Date: Thursday, 11 June 2009, 02:30 PM Pacific Daylight Time
Meaning: Signed per Direction of the TOC President's Office
==========

CORRECTIVE ACTION PLAN

Phase 1 Assessment of Industrial Hygiene Technical Basis
(A-09-ESQ-TANKFARM-001)

U. S. Department of Energy (DOE), Office of River Protection (ORP)

Assessment Report

April 15, 2009

Prepared by:
Washington River Protection Solutions LLC
June 15, 2009

Table of Contents

1.0 Introduction 3
2.0 Corrective Action Methodology 3
3.0 Corrective Action Plan Structure 3
4.0 Finding Number A-09-ESQ-TANKFARM-001-F01 4
5.0 Finding Number A-09-ESQ-TANKFARM-001-F02 7
6.0 Finding Number A-09-ESQ-TANKFARM-001-F03 10
7.0 Finding Number A-09-ESQ-TANKFARM-001-F04 12
8.0 Review and Approval of WRPS Corrective Actions 15
9.0 Corrective Action Plan Reporting and Closure 15

1.0 Introduction

The U.S. Department of Energy, Office of River Protection (ORP) performed an assessment of the Tank Operations Contractor "Industrial Hygiene Technical Basis." The assessment report was transmitted on April 15, 2009. The assessment resulted in four findings. This Corrective Action Plan (CAP) addresses the following issues:

- **A-09-ESQ-TANKFARM-001-F01:** Contrary to 29 CFR 1910.120(p)(5), "New Technology Program, " 29 CFR 1910.120(o)(1), "New Technology Programs" and 1910.120(o)(2) WRPS has not established and implemented programmatic procedures which direct the evaluation and introduction of new technologies into the WRPS Environmental Safety Health & Quality group, which includes the IH program.
- **A-09-ESQ-TANKFARM-001-F02:** Contrary to 29 CFR 1910.132(d), 1910.132(d)(1), 1910.132(d)(1)(i), 1910.132(d)(1)(ii), 1910.132(d)(2), 1910.134(c)(1), 1910.134(c)(1)(i), 1910.120(p)(8), WRPS has not established a written, fully comprehensive decision logic for the selection and use of PPE.
- **A-09-ESQ-TANKFARM-001-F03:** Contrary to 10 CFR 851.21, "Hazard Identification and Assessment" there is a lack of specified criteria in the selection of direct reading air monitoring instrumentation and interpretation of results.
- **A-09-ESQ-TANKFARM-001-F04:** Contrary to 10 CFR 851.21 and 851.23, there is an absence of written direction to incorporate the mandated goal of reducing worker exposure to carcinogens and all other chemicals to levels ALARA, below the Chemicals of Potential Concern (COPC) Occupational Exposure Limit (OEL).

2.0 Corrective Action Methodology

A process based on WRPS procedure TFC-ESHQ-Q_C-C-01, *Problem Evaluation Request*, and TFC-ESHQ-Q_ADM-C-12, *Apparent Cause Analysis and Corrective Action Planning*, was used to develop this CAP. The Findings are documented in Problem Evaluation Requests (PERs) in the Washington River Protection Solutions LLC (WRPS) Issues Management System. The causal analysis, extent of condition, remedial corrective actions, and planned corrective actions for the Findings are documented and tracked in the associated PERs. The causes summarized below are supported by an analysis using commonly accepted causal analysis methods.

3.0 Corrective Action Plan Structure

Each finding is addressed in a separate section. For each finding, the following is provided: background; corrective actions that have been taken to control or remove any adverse impact from the noncompliant conditions until sustainable corrective actions are implemented; corrective actions that will be taken to identify the extent of conditions, correct the causes, and prevent further findings; and the date when all corrective actions will be completed verified and compliance to the applicable requirements achieved.

4.0 Finding Number A-09-ESQ-TANKFARM-001-F01

4.1 Finding

Contrary to 29 CFR 1910.120(p)(5), "New Technology Program, " 29 CFR 1910.120(o)(1), "New Technology Programs" and 1910.120(o)(2) WRPS has not established and implemented programmatic procedures which direct the evaluation and introduction of new technologies into the WRPS Environmental Safety Health & Quality group, which includes the IH program.

4.2 Background

WRPS has written programs and procedures describing the processes for actively seeking out and/or developing new technology to improve worker protection. The written documents cover engineering technology development, instrumentation, and respiratory protection. Examples of technology include waste handling equipment, instrumentation and PPE. Procedures and training are developed when new technology is introduced to ensure employee protection is maintained.

The need for technology development is identified by WRPS when existing processes are inadequate or inefficient and no proven technology is available in the industry for the intended application. Inadequate or inefficient processes often result in workers spending more time in hazardous environments, which increases the risk of harm. TFC-PLN-90 "Technology Development Management Plan" defines the tank farm work processes for developing and deploying new technologies. TFC-PLN-90 is a formal, written document that includes engineering, quality assurance and procurement requirements and complies with 29 CFR 1910.120 (o)(1) as a procedure "...for the introduction of effective new technologies and equipment developed for the improved protection of employees working with hazardous waste..." The technology development process progresses through 3 phases. During phase I, discussions are held with potential vendors who have promising technologies that can be developed for WRPS. A formal procurement is initiated to support further development and testing. The statement of work includes functional criteria and testing requirements for the end use of the developmental technology. During phase II, promising technology is subjected to qualification testing to verify that it meets the intended performance and functional criteria. Test plans and procedures are developed. Inspection is conducted during testing to verify compliance with approved procedures. Prior to release for deployment, the QA engineer verifies the quality of the technology for the intended use. Phase III is deployment. The responsible implementing organization applies existing systems for procedures, receipt inspection, storage, handling and work planning to deploy the technology in the field. TFC-PLN-90 also includes a graded application of Quality Assurance program requirements concerning each phase of technology development.

As an example, design is underway on an innovative robotic arm that offers the potential to increase the efficiency of waste removal from single-shell tanks. The arm, referred to as the Mobile Arm Retrieval System (MARS), will be capable of a wide range of motion and include

telescoping capabilities to enable it to reach the tank extremities. Interchangeable tools on the end of the arm will be used to break up the waste, move it to a pump and remove it from the tank. Incorporating lessons learned from other DOE sites and the corporate parents of WRPS with new technology innovations such as use of lightweight and high-strength composite materials have increased the options for effective tank waste retrieval. Improved retrieval effectiveness and efficiency is expected to lead to workers spending less time in hazardous environments.

TFC-PLN-64 "Industrial Hygiene Instrumentation Plan" includes a formal selection and evaluation process to be implemented prior to purchase of an instrument. This evaluation is conducted by an IH assisted by IHTs, Engineering, Quality Assurance, and the maintenance calibration contractor. TFC-ESHQ_S-IH-CD-38 "Evaluation and Procurement of Industrial Hygiene Monitoring Equipment" is the document that describes in detail the instrument evaluation process. In addition, WRPS has included in the instrument maintenance calibration subcontract statement of work a requirement for the subcontractor to notify WRPS of advances in IH instrumentation or newer models that will improve IH monitoring accuracy or efficiency, including those demonstrated to be successfully evaluated by other Hanford contractors. As an example, the portable gas chromatograph/mass spectrometer (GC/MS) was selected as a method to quickly qualitatively analyze for many of the chemicals of potential concern in vapor grab samples. This improved the efficiency in determining whether protective measures are warranted for a given activity and work location.

Additionally in the area of industrial hygiene instrumentation, WRPS's Performance Objectives, Metrics and Commitments includes an objective for new instrumentation evaluation. Initial evaluation of four potential instrumentation technologies has been completed and further evaluation of one of the technologies (Photon Transfer Reaction Mass Spectrometry) is continuing for use as a real time monitor for VOCs in the tank farms.

In the area of personal protective equipment, WRPS continually looks for new technology. Several documents help drive these activities. Examples where these evaluations have lead to the use of new technology:

- The identification of a different respirator that could be used in locations where a powered air purifying respirators (PAPR) equipped with a high efficiency particulate cartridge equipped, hard hat and hood would be required. This PAPR also is the first model to have audible and visual low flow and low battery alarms. After evaluation of the respirators for tank farm applications and user requirements, the respirators were procured by operations. A maintenance and testing program specific to the PAPRs was developed to ensure safe and reliable operation when in use. The program specifies maintenance, testing, repair and setup of the battery power pack and filter housing.
- The upgrade to use nickel metal hydride battery in PAPRs. These batteries offer increased airflow to the user and can operate the PAPR blower units longer than the previously used nickel-cadmium battery. The nickel metal hydride battery is equipped with a red indicator light that activates after about eight to nine hours of continuous use

and alerts the user that the battery needs to be changed-out for a fully charged battery. These batteries also are not prone to developing a memory.

- The identification of OREX clothing that reduces the potential for heat stress. Currently another generation of OREX is under evaluation that could in some cases replace the use of rainsuits and further reduce the risk of heat stress.

4.3 The Corrective Actions Taken to Control or Remove any Adverse Impact from the Noncompliant Conditions and the Results Achieved

Several examples of procedures, processes and field applications were identified that implement the requirement for new technology. No adverse impacts were identified as a result of the finding. Therefore, no immediate corrective actions were taken.

4.4 Corrective Actions Taken to Identify the Extent of Condition

This finding already applies at the company level. Therefore, no extent of condition was performed for this finding.

4.5 Corrective Actions to be Taken to Correct the Causes and Prevent Further Findings

As identified in the assessment report, there are many examples that show in written documents and current practice that WRPS actively pursues new technologies. However, there is an opportunity to improve the program by formalizing the description of the existing practices within engineering and the Health and Safety organization for complying with the cited standard and compiling the new technologies evaluated in a centralized list. In addition to making compliance easier to demonstrate, these improvements further emphasize the WRPS commitment to continuously improving worker protection. The following actions will be taken:

No.	Action	Deliverable(s)	Responsible Manager	Completion Date
CA-01-01	Update TFC-PLN-55 "Industrial Hygiene Safety Management Program Plan" to clearly describe the WRPS practice for complying with the standard, give direction on giving input to the Health and Safety organization on new technologies evaluated, and adding to the requirements section 29 CFR 1910.120(p)(5), "New Technology Program, " 29 CFR 1910.120(o)(1), "New Technology Programs" and 1910.120(o)(2).	Updated procedure	M. Jones	8/28/09

CA-01-02	Update TFC-PLN-91 "Industrial Safety Management Program Plan" to clearly describe the WRPS practices related to industrial safety worker protection equipment (e.g., fall protection devices) for complying with the standard, give direction on giving input to the Health and Safety organization on new technologies evaluated, and adding to the requirements section 29 CFR 1910.120(p)(5), "New Technology Program, " 29 CFR 1910.120(o)(1), "New Technology Programs" and 1910.120(o)(2).	Updated procedure	W. Gaydosh	8/28/09
CA-01-03	Update TFC-PLN-90 "Technology Development Management Plan" to clearly state the WRPS practice for compliance with the new technology standard, give direction on giving input to the Health and Safety organization on new technologies evaluated, and adding to the requirements section 29 CFR 1910.120(p)(5), "New Technology Program, " 29 CFR 1910.120(o)(1), "New Technology Programs" and 1910.120(o)(2).	Updated procedure	R. Mendoza	8/28/09
CA-01-04	Develop and maintain a centralized list of new technologies evaluated. The list will include input from engineering, industrial safety and industrial hygiene.	List of new technologies	M. Jones	7/31/09

4.6 Finding Analysis

WRPS has reviewed this finding and initiated corrective actions to promote improvement.

5.0 Finding Number A-09-ESQ-TANKFARM-001-F02

5.1 Finding

Contrary to 29 CFR 1910.132(d), 1910.132(d)(1), 1910.132(d)(1)(i), 1910.132(d)(1)(ii), 1910.132(d)(2), 1910.134(c)(1), 1910.134(c)(1)(i), 1910.120(p)(8), WRPS has not established a written, fully comprehensive decision logic for the selection and use of PPE.

5.2 Background

TFC-ESHQ-S_SAF-C-02, "Job Hazard Analysis" is the procedure for hazard assessment and control selection at WRPS. The work hazard analysis document produced during implementation of this procedure and TFC-OPS-MAINT-C-02, "Pre-Job Briefing," are the tools for communicating to employees the hazard and controls for a job. If PPE is required, TFC-ESHQ-S_IS-C-02, "Personal Protective Equipment" provides selection criteria and guidance. RPP-23074 "Tank Vapor Chemicals of Potential Concern, Existing Direct Reading Instrumentation and Personal Protective Equipment Considerations" took the newly released RPP-22491 "Industrial Hygiene Chemical Vapor Technical Basis" and considered respiratory protection, protective glove and suit materials for each chemical of potential concern (COPC). RPP-34147 "Tank Waste Dermal Exposure Assessment" evaluated actual dermal tank waste exposures and calculated theoretical worst case exposure scenarios for tank farm activities for dermal and ocular exposure to tank waste, tank vapors, and tank condensate. It was concluded that standard engineering controls, work practices and protective equipment prevent worker contact with tank wastes, and the worst case dermal hazard scenarios are not met. These conclusions are incorporated in TFC-ESHQ-S_IS-C-02, Attachment A. If respirators are required, TFC-ESHQ-S_IH-C-05, "Respiratory Protection" provides selection criteria and guidance. This guidance addresses the requirements listed in 10 CFR 1910.134, "Respiratory Protection" (evaluation of hazards, identification of relevant workplace and user factors that affect performance and reliability, exposure time, exposure concentration, chemical state and physical form of hazard, use of NIOSH approved respirator, respirator assigned protection factor, selection of proper filter/cartridge, cartridge change out schedule). Tank waste vapor exposure characterization studies have been performed looking at sampling and monitoring data collected during waste disturbing and non-waste disturbing activities. Data and conclusions from these studies have been integrated into worker protection control measures. For example, headspace, source, area, and personal data are available for use in IH hazard analyses performed in TFC-ESHQ-S_IH-C-48, "Managing Vapor Control Zones" and documented in a chemical exposure hazard analysis. During emergency response, WRPS emergency procedures cover initial responses to put employees in safe conditions (e.g., evacuate upwind, take cover, etc...) and then the incident commander/HFD, with input from emergency response radiological and chemical hazard assessors, provide direction on the hazard controls for emergency responders.

5.3 The Corrective Actions Taken to Control or Remove any Adverse Impact from the Noncompliant Conditions and the Results Achieved

Inhalation and dermal exposure assessments for tank waste hazards have been documented and determinations of controls, including PPE, have been selected based on a sound and accepted

decision logic. The tank farm procedures and practices implement these determinations. No adverse impacts were identified as a result of the finding. Therefore, no immediate corrective actions were taken.

5.4 Corrective Actions Taken to Identify the Extent of Condition

This finding already applies at the company level. Therefore, no extent of condition was performed for this finding.

5.5 Corrective Actions to be Taken to Correct the Causes and Prevent Further Findings

As identified in the discussion section of the assessment, the TFC-ESHQ-S_IS-C-02, "Personal Protective Equipment" does not provide a pre-determined process for the selection and service life of chemical protective clothing. It is recommended that TFC-ESHQ-S_IS-C-02, "Personal Protective Equipment" be revised to include a reference for guidance on a recommended chemical protective clothing (CPC) material reference for guidance on CPC selection and service life. This will strengthen the tools available to the industrial hygiene professionals responsible for selecting of CPC. It was also identified that the language in TFC-ESHQ-S_IS-C-02, "Personal Protective Equipment" regarding contact with tank waste could be confusing. It is recommended that TFC-ESHQ-S_IS-C-02, "Personal Protective Equipment" be revised to clarify the hazard and controls associated with tank waste contact. The clarifying statements will clearly provide the existing determination for dermal exposure protection from contact with tank waste. The following actions will be taken:

No.	Action	Deliverable(s)	Responsible Manager	Completion Date
CA-02-01	Update TFC-ESHQ-S_IS-C-02, "Personal Protective Equipment" to include a reference for guidance on a recommended chemical protective clothing (CPC) material reference for guidance on CPC selection and service life.	Updated procedure	W. Gaydosh	9/30/09
CA-02-02	Update TFC-ESHQ-S_IS-C-02, "Personal Protective Equipment" to clarify the hazard and controls associated with tank waste contact.	Updated procedure	W. Gaydosh	9/30/09

5.6 Finding Analysis

WRPS has reviewed this finding and initiated corrective actions to promote improvement.

6.0 Finding Number A-09-ESQ-TANKFARM-001-F03

6.1 Finding

Contrary to 10 CFR 851.21, "Hazard Identification and Assessment" there is a lack of specified criteria in the selection of direct reading air monitoring instrumentation and interpretation of results.

6.2 Background

Two procedures and an "IH Monitoring/Sampling Fact Sheet" address the specific selection criteria for direct reading air monitoring instrumentation. The two procedures are TF-OPS-IHT-007 "Using Direct Reading Instruments" and TFC-ESHQ-S_IH-CD-38 "Evaluation and Procurement of Industrial Hygiene Monitoring Instruments".

Guidance for field selection of instrumentation is provided to the industrial hygienist in TF-OPS-IHT-007 "Using Direct Reading Instruments". TF-OPS-IHT-007 Attachment 4 itemizes selection criteria for choosing direct reading instruments for field use. Section 5.1.3 states "SELECT the appropriate direct reading instrument for the contaminants to be sampled, considering:

- Instrument accuracy
- Instrument sensitivity
- Instrument limitations
- Instrument power sources
- Instrument operating temperature ranges
- Instrument response times
- Potential interferences

"IH Monitoring/Sampling Fact Sheet" found on the "Safety & Health Programs" home page provides a detailed guide on what monitoring instrument to select for evaluating different COPC's. Examples from this fact sheet include the use of iTX for ammonia and ppbRAE for Ethylamine.

Guidance for the procurement of new instrumentation is provided in TFC-ESHQ-S_IH-CD-38 Attachment 1, section 3.0 which directs the industrial hygienist to use form A-6003-896 to ensure that all applicable factors have been considered and evaluated prior to the procurement of any monitoring instrument." Form A-6003-896: "Evaluation of Industrial Hygiene Monitoring Instruments Form" lists selection criteria under the column "EVALUATION FACTOR" to include such items as:

- What is the need for the instrument, ie new chemical hazard, improved technology?

- What agent/s does the instrument measure and by what method?
- What are the optimal operating conditions (temperature, relative humidity and pressure) for operation of the instrument?
- What environmental factors will cause interferences such as dust, humidity or electric fields?
- Note the high and low detections limits, the detection range, and sub-ranges (e.g., 0-200 ppm and 20-1000 ppm)
- What is the detection limit?
- What chemicals will cause false positive/false negative readings or other interferences?
- Will the instrument record specific data, such as the average, the peak, and lowest readings?
- List limitations of the instrument that are not specified above.

6.3 The Corrective Actions Taken to Control or Remove any Adverse Impact from the Noncompliant Conditions and the Results Achieved

Several examples of specific criteria for the selection of direct reading air monitoring instruments and interpretation of results have been provided. No adverse impacts were identified as a result of the finding. Therefore, no immediate corrective actions were taken.

6.4 Corrective Actions Taken to Identify the Extent of Condition

This finding already applies at the company level. Therefore, no extent of condition was performed for this finding.

6.5 Corrective Actions to be Taken to Correct the Causes and Prevent Further Findings

As identified in the discussion section of the assessment, reliance on professional judgment creates the potential for errors, inconsistency and difficulty for auditors. While WRPS has an industrial hygiene qualification process (rated highly by the ORP assessment) that enhances our staff's professional judgment, an update to TF-OPS-IHT-007 is recommended to incorporate a decision logic for instrument selection and data interpretation for routine and non-routine monitoring. The update will be communicated to the industrial hygienists. The rationale for the volatile organic compound action level will be provided in an industrial hygiene fact sheet. These actions are intended to reduce the risk of errors and inconsistencies associated with the reliance on professional judgment of industrial hygienists and auditors. The following actions will be taken:

No.	Action	Deliverable(s)	Responsible Manager	Completion Date
CA-03-01	Update TF-OPS-IHT-007 by incorporating documentation of the decision logic for routine and non-routine monitoring regarding instrument selection and data interpretation.	Updated procedure.	M. Jones	9/30/09
CA-03-02	Communicate to the industrial hygienists the changes to the procedure.	Communication to the industrial hygienists.	M. Jones/K. Roueche/L. Gurney	10/30/09
CA-03-03	Document the rationale for the volatile organic compound action level.	Industrial hygiene fact sheet.	M. Jones	7/17/09

6.6 Finding Analysis

WRPS has reviewed this finding and initiated corrective actions to promote improvement.

7.0 Finding Number A-09-ESQ-TANKFARM-001-F04

7.1 Finding

Contrary to 10 CFR 851.21 and 851.23, there is an absence of written direction to incorporate the mandated goal of reducing worker exposure to carcinogens and all other chemicals to levels ALARA, below the Chemicals of Potential Concern (COPC) Occupational Exposure Limit (OEL).

7.2 Background

WRPS fully endorses the best management practice "to maintain chemical vapor exposures as low as is practical." WRPS believes this is a key aspect of our worker protection program. The ALARA concept in industrial hygiene is the anticipation, recognition, evaluation and control of hazards and is based on American Industrial Hygiene Association "A Strategy for Assessing and Managing Occupational Exposures" (AIHA Strategy) as provided in guidance from DOE G 440.1-3.

While there is not a formal description of the ALARA concepts as related to industrial hygiene, the tenets of ALARA concepts (similar to those or the Radiological Control Program) are generally described in our existing procedures and processes. Overall, WRPS procedures, plans and training courses have, through various means, provided direction and approaches to maintaining chemical exposure to as low as is practical.

At the TOC, the defining document for chemical ALARA concepts is the RPP-13033 Tank Farm Documented Safety Analysis. Chapter 8, "Hazardous Material Protection," section 8.4 states the hazardous material ALARA policy and program as the following: "The hazardous material protection program ensures that exposure to hazardous materials are below regulatory limits and where possible additional controls are in place to further reduce exposures." The chapter continues with a description of hazardous material training, hazard identification, administrative limits, occupational medical surveillance, respiratory protection, hazardous material monitoring, instrumentation, record keeping, hazard communication, and occupational chemical exposures. These ALARA concepts are implemented through other safety and health programmatic documents.

Additional carcinogen and chemical exposure direction is found in TFC-ESHQ-IH-STD-11 "Carcinogen Control" and TFC-PLN-34, the "Industrial Hygiene Exposure Assessment Strategy." The primary purpose of TFC-PLN-34, which is based on the AIHA Strategy, is to ensure exposures are characterized and controlled well enough to keep present risks acceptable and to put the organization in the position to manage future risks. Managing future risks is, in part, a function of maintaining exposures to a level that is acceptable.

WRPS believes there is improvement needed to make the chemical ALARA a cohesive program. Actions to improve the program are described in section 7.5.

7.3 The Corrective Actions Taken to Control or Remove any Adverse Impact from the Noncompliant Conditions and the Results Achieved

Programs, procedures and training courses have been identified which provide written direction on maintaining carcinogen and chemical exposures ALARA. No adverse impacts were identified as a result of the finding. Therefore, no immediate corrective actions were taken.

7.4 Corrective Actions Taken to Identify the Extent of Condition

This finding already applies at the company level. Therefore, no extent of condition was performed for this finding.

7.5 Corrective Actions to be Taken to Correct the Causes and Prevent Further Findings

In an effort to improve the WRPS IH ALARA program, actions have been identified. These improvement actions will assist WRPS in providing a comprehensive and cohesive process for maintaining chemical vapor exposures as low as is practical.

We will improve our documents on IH ALARA. A policy statement will be added to our Industrial Hygiene Safety Management Program Plan stating our goal is "to maintain chemical vapor exposures as low as is practical." We will review our plans and procedures to ensure a consistent approach on IH ALARA concepts. We will develop, as part of the ongoing actions related to the Hanford Concerns Council (HCC) Phase I independent review, a sampling strategy that provides a method for management to evaluate program performance in maintaining exposures to tank vapors by reducing uncertainties.

We will develop a communication plan for improving the work force awareness of IH ALARA principles. This plan could include, for example, communication of information about IH ALARA principles and work practices through campaigns (e.g. posters) and use of the Chemical Vapor Solutions Team (CVST).

In addition, WRPS is committed to having an outside review of the IH ALARA process at the TOC as compared to the principles of a radiological ALARA program, to assist in determination of areas where the IH ALARA process could be improved. This outside review will identify gaps for WRPS to determine which elements of ALARA concepts can be better described, defined and implemented through our Safety and Health Programs to support the goal of "to maintain chemical vapor exposures as low as is practical."

No.	Action	Deliverable(s)	Responsible Manager	Completion Date
CA-04-01	Add the policy statement "to maintain chemical vapor exposures as low as is practical"	Revised TFC-PLN-55 Industrial Hygiene Safety Management Program Plan	M. Jones	8/28/09
CA-04-02	Develop and provide to HCC a strategy for continued tank vapor exposure assessment.	New draft document provided for HCC review.	M. Jones	6/22/09
CA-04-03	Review and update TOC IH procedures to provide a consistent message on ALARA concepts	Updated documents	M. Jones	11/30/09
CA-04-04	Develop a communication plan to improve IH ALARA awareness.	New communication plan	D. Tuckness	8/28/09
CA-04-05	Conduct a review of the IH ALARA process compared to a radiation ALARA program and determine areas for improvement	Issue statement of work with schedule to outside reviewer.	F. Beranek	8/28/09

7.6 Finding Analysis

WRPS has reviewed this finding and initiated corrective actions to promote improvement.

8.0 Review and Approval of WRPS Corrective Actions

This CAP was developed by the assigned responsible manager and was approved by the Safety & Health Manager.

9.0 Corrective Action Plan Reporting and Closure

Corrective actions for each Finding will be tracked and monitored using the PER system.

To close an action, the responsible manager must provide objective evidence documenting completion of the actions and verifying compliance to the applicable requirements. Closure documentation will be attached electronically to the associated PER.

Save

Problem Evaluation Request (PER)

WRPS-PER-2009-0897
In Process/Work

PER No	Date of Discovery	Time of Discovery (24:00)	Project
WRPS-PER-2009-0897	05/05/2009	15:36	S&H

Location

OTHER

How Was Problem Discovered

DOE-ORP

Description of Concern or Problem

The U. S. Department of Energy, Office of River Protection (ORP) conducted a Phase I assessment (A-09-ESQ-TANKFARM-001) of the programmatic elements of the Washington River Protection Solutions LLC Industrial Hygiene program during January and February 2009. The assessment was directed at four elements of interest including past assessments, program technical basis and procedures, staff qualifications, and program management. The assessment resulted in four Findings and one Observation including:

A-09-ESQ-TANKFARM-001-F02: Contrary to 29 CFR 1910.132(d), 1910.1 32(d)(1), 1910.132(d)(1)(i), 1910.132(d)(1)(ii), 1910.132(d)(2), 1910.134(c) (1), 1910.134(c)(1)(i), and 1910.1 20(p)(8), WRPS has not established a written, fully comprehensive decision logic for the selection and use of PPE.

Requirement Not Satisfied	Source Document Number

Equipment Identification Number	System Identification

Immediate actions Taken or Planned

Initiated PER

Recommended Corrective actions

Assign to M. Jones. Develop CAP and transmit to ORP.

Originator Contact

e-mail

Originators Name	Originators ID	Originators Phone	Date Initiated
Mata, Beth L	H0056284	(509) 373-0422	05/05/2009

SHIFT OPERATIONS REVIEW

Title

ORP Assessment of Industrial Hygiene Program Finding 2

How Discovered	Agency
Externally Identified	DOE ORP

Reportability	SSC Operability	Operability Review	Comp Measures Req
Non-Reportable	N/A	N/A	

Describe actions Taken or Recommended

No additional actions taken or recommended by the BOSO.

SO Reviewer Name	SO Reviewer ID	SO Reviewer Phone	SO Review Date
Higham, Dale B	H0078950	(509) 373-2689	05/05/2009

SCREENING

PER Significance Level	
PER with Resolution	

Independent Assessment Review	Occurrence Report Number	Externally Identified	
Yes		Yes	

Assigned Responsible	Facilities Rep / SSO	Safety Management Rep	

Manager			
Jones, Mark W		Tuckness, Dennis T	
Program		**Safety Management Program**	
• N/A		• Industrial Hygiene	
PER Screening Comments			
PER w/ Res with informal Apparent Cause Analysis (Nancy Brown 05/06/09)			
Causal Code			
A5B2C05	Communications LTA Written Communications Content LTA Ambiguous instructions/requirements		
A5B3C01	Communications LTA Written Communication Not Used Lack of written communication		
MGT/Comm/Train	**Human Performance**	**GEMS**	**Equip/Eng/Other**
Failed Barrier	**ORPS Code**	**Functional Area**	**Work Process**
	Not Applicable	Occupational Safety and Health	• Assessments • Personnel Protection Equipment Use (PPE)
ISMS	**Consequence Code**		
Perform work within the controls	• ^N/A^ - No consequence code applies		
PER Screening Chair	**PER Screening Chair ID**	**PER Screening Chair Phone**	**PER Screening Date**
Brown, Nancy L	H0088797	(509) 373-0992	05/06/2009
PAAA REVIEW			
PAAA Screening	**PAAA Codes**	**Function Codes**	
PAAA, Non-NTS Reportable	• 10 CFR 851.23 (a)(3)	• Industrial Hygiene • Personal Protective Equipment (PPE) • Work Practices, Procedures, and Administrative Controls	
NTS Report Number	**NTS Report Date**		
Repetitive / Recurrent	**Programmatic**	**Intentional Violation / Misrepresentation**	
No	No	No	
PAAA Screening Comments			
29 CFR 1910.132(d), 1910.1 32(d)(1), 1910.132(d)(1)(i), 1910.132(d)(1)(ii), 1910.132(d)(2), 1910.134(c) (1), 1910.134 (c)(1)(i), and 1910.1 20(p)(8); TFC-PLN-47 Section 4.1			
PAAA Reviewer Name	**PAAA Review Date**		
Anderson, Craig E	05/06/2009		
PAAA Approver Name	**PAAA Approve Date**		
Anderson, Craig E	05/07/2009		
SENIOR MANAGEMENT REVIEW/CONCURRENCE			
TF Operations Morning Leadership Call			
N/A			
Instructions for Responsible Manager			
Review the PER Screening Tab for requested data. Complete the task in E-STARS in accordance with TFC-ESHQ-Q_C-C-01, and TFC-ESHQ-Q_ADM-C-12 Apparent Cause Analysis & Corrective Action Planning.			
Senior Management	**Sr Mgmt ID**	**Sr Mgmt Phone**	**Sr Mgmt Review Date**
Brown, Nancy L	H0088797	(509) 373-0992	05/07/2009

CAUSE ANALYSIS

Description of Occurrence

WRPS has not established a written, fully comprehensive decision logic for the selection and use of chemical protective clothing for waste contact or use of respirators for tank vapors, which increases the risk that the method for selection of PPE is not reproducible. The existing written decision logic for the selection for PPE does not include a WRPS recommended material reference for chemical protective clothing. IH professional judgment is relied upon to use an appropriate reference and to understand the TOC supporting technical documents on dermal and respiratory exposure assessments.

Extent of Condition

The existing WRPS plans/procedures and supporting technical documents containing selection criteria on PPE and respiratory protection were reviewed to determine if there were compliance issues with 29 CFR 1910.132, 29 CFR 1910.134 or 10 CFR 851. There is no evidence of non-compliance. Opportunities for improvement were identified. The WRPS procedures/plans that need to be revised are identified in the attached corrective action plan.

Safety Significance

This is a programmatic improvement that is not likely to impact employee safety, equipment or environmental protection.

Generic Implications

Remedial Corrective Action

Write Corrective Action Plan to detail the procedure/plan changes to provide a more comprehensive written guidance on general PPE selection criteria.

Causal Analysis, Apparent Cause and/or Root Cause Analysis

While the determination of PPE is being selected on sound and accepted decision logic and the tank farm procedures and practices implement these determinations, the language in TFC-ESHQ-S_IS-C-02; "Personal Protective Equipment" regarding contact with tank waste could be improved. WRPS has determined that the procedure will be revised as noted in the corrective action plan for clarification purposes.

CORRECTIVE ACTIONS

Actionee	Action Due Date	E-STARS Number
Gaydosh, William L	09/30/2009	

Action

Update TFC-ESHQ-S_IS-C-02, "Personal Protective Equipment" to include a reference for guidance on a recommended chemical protective clothing (CPC) material reference for guidance on CPC selection and service life.

Corrective Action Attachments

Actionee	Action Due Date	E-STARS Number
Gaydosh, William L	09/30/2009	

Action

Update TFC-ESHQ-S_IS-C-02, "Personal Protective Equipment" to clarify the hazard and controls associated with tank waste contact.

Corrective Action Attachments

ATTACHMENTS

0900723_09-ESQ-076_WRPS_-_[0904160568].pdf

Link to PER

WRPS-PER_2009-0897 WRPS 0901072 R1 Letter.doc[1].pdf

WRPS-0901072_R1_Enclosure_Native.doc

AUDIT HISTORY

Change Date	Auditor	Comments
05/06/2009 10:25	Anderson, Craig E	PAAA Screening Comments Changed
05/07/2009 10:11	Brown, Nancy L	Responsible Manager Task Launched by Brown, Nancy L

-- End of Report --
07/09/2009 04:03 PM

Task# WRPS-PER-2009-0897

E-STARS[R] Report
Task Detail Report
07/09/2009 1603

TASK INFORMATION			
Task#	WRPS-PER-2009-0897		
Subject	RES; ORP Assessment of Industrial Hygiene Program Finding 2		
Parent Task#		**Status**	Open
Reference		**Due**	06/27/2009
Originator	^PER Coordinator	**Priority**	Medium
Originator Phone		**Category**	PER
Origination Date	05/05/2009 1537	**Generic1**	None
Remote Task#		**Generic2**	None
Deliverable	PER Review	**Generic3**	None
Class	None	**View Permissions**	Global
Instructions	*No Instructions*		

ROUTING LISTS		
1	Responsible Manager	Active
	Review the PER Screening Tab for requested data. Complete the task in E-STARS in accordance with TFC-ESHQ-Q_C-C-01, and TFC-ESHQ-Q_ADM-C-12 Apparent Cause Analysis & Corrective Action Planning.	
	• Jones, Mark W - Assign - Completed with comments - 06/18/2009 0942 *Instructions:*	
	• Jones, Mark W - Assign - Completed with comments - 06/18/2009 0953 *Instructions:* Did you contact the originator about the PER? Document your contact in the response window.	
	• ^Independent Assessment Review(Brown, Robert L) - Review - Concur with comments - 06/29/2009 1423 *Instructions:* Independent Assessor Review	
	• Tuckness, Dennis T - Review - Concur with comments - 07/01/2009 1520 *Instructions:* Safety Management Representative Review	
2	Review Initial PER	Inactive
	Review New PER	
	• ^SO(Higham, Dale B) - Review - Concur - 05/05/2009 2226 *Instructions:*	
	• ^PER Screening(Brown, Nancy L) - Review - Concur - 05/06/2009 1538 *Instructions:*	
	• ^Mgr Review(Brown, Nancy L) - Review - Concur - 05/07/2009 1002 *Instructions:*	

ATTACHMENTS	
Attachments	1. 0900723_09-ESQ-076_WRPS_-_[0904160568].pdf 2. Link to PER 3. WRPS-PER_2009-0897 WRPS 0901072 R1 Letter.doc[1].pdf 4. WRPS-0901072_R1_Enclosure_Native.doc

COMMENTS	
Poster	Jones, Mark W (Bowman, Tami A) - 06/18/2009 0942

Task# WRPS-PER-2009-0897

	Completed		
	Corrective actions ready to launch. Bowman 06/18/2009		
Poster	Jones, Mark W (Bowman, Tami A) - 06/18/2009 0953		
	Completed		
	PER originator contacted via telephone. Bowman 06/18/2009		
Poster	^Independent Assessment Review (Brown, Robert L) - 06/29/2009 1423		
	Concur		
	concur		
Poster	Tuckness, Dennis T - 07/01/2009 1520		
	Concur		
	This was a formal corrective action plan to ORP		
TASK DUE DATE HISTORY			
Modified	05/07/2009 1011 - ^PER Coordinator	**New Due Date**	06/19/2009 1630
Modified	05/07/2009 1011 - ^PER Coordinator	**New Due Date**	06/27/2009 1630
Modified	05/05/2009 1537 - ^PER Coordinator	**New Due Date**	05/07/2009 1630
SUB TASK HISTORY			
Subtask#	WRPS-PER-2009-0897.1		
Subject	RES; ORP Assessment of Industrial Hygiene Program Finding 2		
Originator	Jones, Mark W (Bowman, Tami A)		
	Routing List	*No Active Routing List*	

-- end of report --

INCOMING CORRESPONDENCE COVERSHEET

CORR-2009-0083

Author	Addressee	Correspondence No.
J. C. Poniatowski/ORP	J. M. Armstead/WRPS	0900723 DOE-ORP: 09-ESQ-076

Subject: CONTRACT NO. DE-AC27-08RV14800 – RESULTS OF ASSESSMENT A-09-ESQ-TANKFARM-001, PHASE 1, "INDUSTRIAL HYGIENE TECHNICAL BASIS"

DISTRIBUTION

Washington River Protection Solutions
WRPS Correspondence Control
JC Allen-Floyd
JM Armstead
F Beranek ((Assignee))
HS Berman
MN Brosee
C Burrows
GJ Johnson
WJ Johnson
MW Jones
MA Lindholm
KJ Rueter
DJ Sansotta
SM Sax
BR Thomas
DT Tuckness

Priority:	**NORMAL**
Assignee:	F. Beranek
Received:	April 16, 2009
Due Date:	5/16/2009 – Respond to the assessment findings as directed by ORP.

WRPS Correspondence Control
For Questions call: 376-0271
Outlook Address: ^WRPS Correspondence Control

U.S. Department of Energy
[redacted]
P.O. Box 450, MSIN H6-60
Richland, Washington 99352

JAN 12 2009

08-ESQ-335

Mr. Mike Armstead
Procurement Contracts Manager
Washington River Protection Solutions LLC
2440 Stevens Center Place
Richland, Washington 99354

Dear Mr. Armstead:

CONTRACT NO. DE-AC27-08RV14800 – NOTIFICATION OF INDUSTRIAL HYGIENE TECHNICAL BASIS ASSESSMENT

The U.S. Department of Energy, Office of River Protection (ORP) will conduct an assessment of the Washington River Protection Solutions LLC industrial hygiene technical basis during the month of January 2009. The lead for this assessment is Richard L. Urie and supported by Mario R. Moreno. An assessment review plan is attached.

If you have any questions, please contact me, or your staff may contact Richard L. Urie, Office of Environmental Safety and Quality, (509) 376-2229.

Sincerely,

Joseph C. Poniatowski
Contracting Officer

ESQ:RLU

Attachment

cc w/attach:
F. Beranek, WRPS
M. W. Jones, WRPS
D. T. Tuckness, WRPS
WRPS Correspondence

Attachment
08-ESQ-335

JAN 1 2 2009

U.S. Department of Energy

Office of River Protection

Industrial Hygiene Technical Basis Assessment

of

Washington River Protection Solutions

Industrial Hygiene Technical Basis Assessment
A-09-ESQ-TANKFARM -001

PURPOSE:

U.S. Department of Energy (DOE), Office of River Protection (ORP) will conduct an assessment of the contractor's Industrial Hygiene (IH) technical basis programmatic documents, staff qualifications, and internal means of management, which provide guidance of work implementation at the Washington River Protection Solutions LLC (WRPS) operated facilities. This assessment fulfills a scheduled assessment that is identified in the ORP Fiscal Year 2009 Integrated Assessment Schedule. The assessment will conform to the requirements of ORP procedure ESQ-IP-1, RO.

INDUSTRIAL HYGIENE SCOPE:

The scope of this assessment shall be limited to the following basic tasks:

I. A review and assessment of all WRPS programmatic IH related documents, as defined in this section;

II. An evaluation of the IH personnel qualifications by way of a review of staff qualifications cards and through small group interviews; and

III. A review of WRPS IH management records, data bases and reports that reflect the current level of effort associated with IH treads analysis, program metrics, program planning, self-assessments, and associated corrective actions.

The assessment plan was developed using DOE G 440.1-3, titled Occupational Exposure Assessment. DOE G 440.1-3 provided the Criteria, Review, and Approach Documents (CRAD)/Lines of Inquiry which are listed below. The assessor modified the CRADs/Lines of Inquiry to be more specific as it relates to WRPS. The assessor will use a combination of conventional review techniques during the course of the assessment, including document reviews, personnel interviews, and field observations.

For the purpose of this assessment and to assure a common understanding, an IH program is considered to consist of the following technical and programmatic sub-elements:

1. Hazard communication & related training;

2. Chemical exposure monitoring, modeling, and related health risk assessments;
   a. Inclusive of air & surface sources, instrumentation, and techniques in consideration of eye/dermal exposures, injection, inhalation and ingestion

3. Toxicology and chemical hazard assessments;
   a. Inclusive of medical surveillance, and consideration of health effects such as cancer, birth defects, chemical sensitivity, target organ effects; explosive,& reactive chemical hazards

4. Implementation and testing of control strategies for IH Hazards;
   a. Inclusive of demonstrated consideration of engineering controls, including ventilation and shielding; administrative controls including product or process substitution; ongoing reviews of emerging technologies

5. Ergonomics and illumination;

6. Identification, assessment, and control of physical work environment factors;
   a. Inclusive of heat and cold, high and low pressure environments, and shift work

7. Selection and use of Personal Protective Equipment, with an emphasis on eye, face, skin, and respiratory protection;

8. Energy and electromagnetic radiation;
   a. Inclusive of the Identification, assessment and control of noise, non-ionizing radiation, and laser safety

9. Biological hazards assessment within the work place;
   a. Inclusive of pathogenic agents, poisonous organisms, and allergens

10. Functional IH Management elements, including:
    a. Staff Training and Qualifications programs
    b. Trends analysis, Metrics, tracking, self-assessments and reporting
    c. Lessons learned, corrective actions and improvements
    d. Employee interactions and informational exchange
    e. Planning, budgeting, and continuing education

11. Integration of the afore mentioned IH elements into applied operations including:
    a. Hazardous Waste Operations
    b. Confined Space Entry
    c. Laboratory Chemical Hygiene Plans
    d. Chemical spill response activities
    e. Beryllium, lead, carcinogen and asbestos management programs

CRITERIA

The CRAD is intended to provide guidance for evaluation of the occupational exposure assessment and health hazards management component of the DOE and WRPS IH program. The goal of the criteria is to answer the fundamental question:

"Is WRPS properly planning, and effectively managing an industrial hygiene, occupational exposure assessment, and hazards management program that meets the intent of 10 CFR 851?"

Enclosure 1 provides detailed questions that may be utilized as specific CRADs. Enclosure 2 provides a summary of the methodology to be employed, to assist WRPS in facilitation of the assessment process.

TEAM MEMBERS:

The assessment team will be lead by Richard L. Urie, with the support of Mario R. Moreno.

REQUIREMENTS:

- 10 Code of Federal Regulations (CFR) Part 851, Worker Safety and Health Program Rule;
- 10 CFR Part 850 Chronic Beryllium Disease Prevention Program; Final Rule (not applicable to this assessment);
- DOE G 440.1-3, Occupational Exposure Assessment;
- DOE O 226.1a, Contractor Assurance;
- OSHA Regulations Standards - 29 CFR 1910 and 1960;
  - 29 CFR 1910, with emphasis on –
    - General Duty Clause
    - 29 CFR 1910.120 Hazardous Waste Operations
    - 29 CFR 1910.132, Personal Protective Equipment
    - 29 CFR 1910.134, Respiratory Protection
    - 29 CFR 191 0. 94, 95 & 97 Ventilation, noise, & Non ionizing Radiation
    - 29 CFR 146 Confined Space Entry
    - 29 CFR 1910.141 Sanitation
- DOE Environmental Safety and Health (ES&H) Reporting Order 231.1; and Computerized Accident/Incident Reporting System;
- DOE O 231.1A, ES&H Reporting;
- Work Authorization System Order; DOE O 412.1A;
- ES&H Goals Policy; DOE P 450.7
- Safety Management Functions, Responsibilities, and Authorities Policy; DOE P 411.1
- Quality Assurance Order; DOE O 414.1C;

- DOE Notice 450.14, Safe Handling, Transfer, and Receipt of Biological Etiologic Agents at Department of Energy Facilities;
- DOE P 456.1, Secretarial Policy Statement on Nanoscale Safety;
- DOE Order 5480.19, Conduct of Operations Requirements for DOE Facilities;
- DOE Order 5480.20A, Personnel Selection, Qualification, and Training. Requirements for DOE Nuclear Facilities; and
- DOE O 225.1A, Accident Investigations.

Richard L. Urie, Team Lead, January 7, 2009

ENCLOSURE 1

PERFORMANCE OBJECTIVES

Performance Objective 1: Washington River Protection Solutions LLC (WRPS) Program Documentation

Criteria to be evaluated:

1. Has the WRPS Safety and Health Organization documented the Industrial Hygiene (IH); occupational exposure and health hazards management programs in a manner which is comprehensive and compliant with 10 Code of Federal Regulations (CFR) 1910.851, 10 CFR 850 and 851, other U.S. Department of Energy (DOE) Directives and recognized consensus standards (e.g., the American Industrial Hygiene Association [AIHA], National Institute of Occupational Safety and Health [NIOSH]). Has the WRPS IH program defined the technical areas and the frequency at which each technical area is assessed? For each technical area, are there procedures for performing the health hazard assessment which defines the purpose, scope, responsibilities, assessment criteria, and references? Does the assessment documentation include: occupational exposure assessment and sampling methodology, laboratory analysis method used, report findings, causal analyses, corrective actions, review, and distribution of report?

2. Has WRPS documented a clear definition of responsibility for decisions by senior management, provision for escalation of worker health matters involving significant occupational exposures and hazards to DOE in an appropriate time frame?

3. Does WRPS maintain a documented sitewide planning and budgeting process which includes priorities for managing occupational exposures and health hazards?

4. Does the WRPS Safety and Health Organization have documented implementation plans for the occupational exposure and health hazards management program?

5. Has WRPS established clear lines of authority and responsibility for managing the occupational exposure and health hazards program? Are responsibilities of each staff position defined for worker health activities? Internal and external interfaces within and between the DOE Office of River Protection, the WRPS, and with outside groups (i.e., State, local, and regional health officials and other government agencies), being clearly and formally defined for each position?

6. Has the WRPS Safety and Health Organization developed and maintained a written occupational exposure and health hazards management program in conformance to 10 CFR 850, and 10 CFR 851.

PERFORMANCE OBJECTIVES

Performance Objective 2: Operating Contractor's Program Implementation of Administrative Elements

Criteria to be evaluated:

1. Has WRPS fully integrated its IH; occupational exposure and health hazards management program into the work planning and execution process?

2. Does the contractor's Safety and Health organization prepare an annual assessment schedule showing the occupational exposure and health hazards assessments planned?

3. Does the contractor's Safety and Health organization submit to the DOE Office of River Protection (ORP), a list of the dates on which occupational exposure and health hazards technical assessments were preformed?

4. Do the WRPS audit management system tools include; procedures for performing occupational exposure and health hazards assessments, worksheets, periodic standard report formats, reference material, training material, which are provided to staff performing assessments?

5. Does the contractor's Safety and Health Organization has a system in place to control, maintain occupational exposures, health hazards management procedures and hazard control guides current? Does the system include a mechanism for updating and distributing procedures, and internal guides on a specified schedule?

6. Does WRPS Safety and Health Organization perform analyses on significant occupational exposures and health hazards assessment findings? Has the contractor identified staff that is responsible for correcting the contractor's health hazard deficiencies? Are the actions necessary to resolve the deficiency addressed in corrective action plans?

7. Does the contactor's Safety and Health organization perform trend analysis of findings from the occupational exposures and health hazards programs? Does the contractor communicate leading and lagging performance trends to ORP? Does the contractor have a technically defensible corrective action management program that will prevent reoccurrence of IH; occupational exposure and health hazards management program deficiencies?

8. Does the contractor's Safety and Health organization have a tracking system that includes all occupational exposures and health hazards finding? Does the tracking system identify corrective actions, schedules, and progress made on corrective actions? Is other information such as results of root cause analyses also included in the tracking system? Is there a method to flag or highlight significant events or actions is included in the tracking system?

9. Does the contractor's Safety and Health organization ensure that management processes, activity hazards identification and analysis, and functional technical appraisals in specific occupational exposure and health hazards assessment subject areas are included in the contractor's program and are integrated into the Contractor's safety management, work planning and execution system?

   Note: This might include: activity hazards analysis, exposure assessments, hazard controls and, the specific technical program elements (e.g., noise and hearing conservation, ventilation, respiratory protection, asbestos, non-ionizing radiation (radio-frequency radiation, lasers, magnetic fields), ergonomics, carcinogens, DOE Beryllium program, Occupational Safety and Health Administration (OSHA) substance specific health standards i.e., Benzene, Asbestos, etc; occupant emergency and critical event planning, sanitation, vibration, extreme temperature, biohazards, confined spaces, laboratory hygiene program, Indoor Air Quality, office environments, recordkeeping, employee training and certification, and labeling and posting).

10. Does the contractor's line management organization track the effectiveness of its implementation of the occupational exposure and health hazards program by reviewing the findings of its internal assessments of the program? Does the contractor's line management identify problems which are promptly corrected?

11. Does WRPS have an effective corrective action program and organizational structure for resolving related action items? Contractor performance with respect to completing corrective actions is documented, reported, and tracked?

12. Does the WRPS Safety and Health organization have adequate staff with a level of professional training, experience commensurate with the requirements for implementation of the IH; occupational exposures and health hazards management program?

13. Does the WRPS Safety and Health organization ensure that internal self-assessments of occupational exposure and health hazards are conducted?

14. WRPS Safety and Health Organization ensure compliance with mandatory standards for assessing and managing occupational exposures and health hazards.

15. Is the WRPS occupational exposure and health hazards assessment staff adequately trained in occupational exposure assessment, such as through an AIHA, or other academic based program? Does the training address familiarization with all mandatory standards, AIHA or NIOSH criteria, guidance documents, and other references that are pertinent to the technical area; use of procedures for conducting the assessment and, instructions on preparing reports and related documentation?

16. Does the WRPS Safety and Health Organization prepare performance indicator reports, utilize performance indicators involving occupational exposures, health hazards data, and other operations information? This includes; medical monitoring, epidemiological surveillances, Computerized Accident/Incident Reporting System, OSHA 300 log data,

Occurrence Reporting and Processing System reportable occurrences, for performing trending and analysis to provide early identification of potential exposure and health hazards and/or deteriorating/improving worker health conditions.

17. WRPS provides management periodic summaries of performance on the assessment and management of occupational exposures and health hazards.

18. Has WRPS developed program management goals related to occupational exposures and health hazard? Are these goals measurable and include short-term (annual) and long-term goals (several year period) to assess and manage occupational exposures and health hazards? Is the progress towards goals monitored regularly and goals adjusted as necessary? Do the line managers have performance elements in their personnel appraisal relating to successful attainment of program management goals?

ENCLOSURE 2

METHODOLOGY

The Industrial Hygiene (IH) technical basis assessment shall consist of the following elements:

1. An in-brief tentatively planned for the week of January 12, 2009, involving the Washington River Protection Solutions LLC (WRPS) health and Safety Manager and IH Manger; and the U.S. Department of Energy (DOE) assessment team. The purpose of the in-brief is to clarify the scope and the applicable Criteria Review and Approach Documents; and to discuss scheduling and logistical requirements of the assessment.

2. The DOE Office of River Protection (ORP) assessment team shall review all WRPS IH related programs, plans, procedures and related documents currently on record. This assessment will not necessarily include a detailed review of data bases, log books, and records, other than to verify the presence of such documents as warranted. The review process will entail a comparative analysis of WRPS programmatic documents to Federal requirements (please see requirements section below) and include a review such umbrellas programs as:

   - 851 requirements Matrix TFC-ESHQ-S_SAF-CD-11;
   - Worker Health and Safety Program, RPP-27195; and
   - Tank Operations Contractor Health and Safety Plan.

To include secondary and tertiary documents such as

- IH Chemical Vapor Technical Basis, RPP-22491, Revision 1;
- IH Exposure Assessment Strategy RPP-27195 TFC-PLN-34 R D-2; and
- IHT-007 Using Direct Reading Instruments.

3. The DOE ORP assessment team will meet with the appropriate WRPS management representatives to gain a clear understanding of WRPS IH program goals, objectives, metrics/ trends analysis, and internal assessment efforts and results. In addition, the team will review the communication process between the WRPS IH management team and the DOE ORP representatives with respect to on-going programmatic updates and special event notifications. The meeting(s) will also serve as an opportunity to clarify any questions regarding WRPS written programs and guidance documents.

4. The DOE ORP assessment team will coordinate with WRPS a series of interviews with equal grades of all WRPS IH personnel for the purpose of evaluating their level of knowledge and

training; and to gain first hand insight into their respective job duties and interactions relative to the programmatic directives.

5. The DOE ORP assessment team will conduct a Generator Assistance Program analysis based on the results of the assessment per a 10 CFR 851 itemized template.

6. Other elements as deemed necessary.

7. The DOE ORP assessment team will conduct a de-brief to discuss any draft observations or findings with WRPS managers of interest.

Task# ORP-ESQ-2008-0344

E-STARS[R] Report
Task Detail Report
01/12/2009 1013

TASK INFORMATION

Task#	ORP-ESQ-2008-0344		
Subject	CONCUR:08-ESQ-335; NOTIFICATION OF INDUSTRIAL HYGIENE TECHNICAL BASIS ASSESSMENT		
Parent Task#		**Status**	CLOSED 01/12/2009
Reference	08-ESQ-335	**Due**	
Originator	Gano, Becky	**Priority**	High
Originator Phone	(509) 376-6004	**Category**	None
Origination Date	12/30/2008 0835	**Generic1**	
Remote Task#		**Generic2**	
Deliverable	None	**Generic3**	
Class	Long Term	**View Permissions**	Normal

Instructions

Correspondence is being routed for concurrence via hard copy. Once you receive the correspondence, please approve or disapprove electronically via E-STARS and route to next person on the routing/concurrence list.

BCC:
ESQ OFF FILE
ESQ RDG FILE
J.C.PONIATOWSKI, AMD
W.J.TAYLOR, ESQ
K.A.HOAR, VCD
R.L.URIE, VCD

RECORD NOTE:

ROUTING LISTS

1	Route List	Inactive

- Urie, Richard L - Review - Cancelled - 01/12/2009 1013
  Instructions:
- Hoar, Kenneth A - Review - Concur - 01/12/2009 1003
  Instructions:
- Taylor, William J - Review - Concur - 01/12/2009 0734
  Instructions:
- Poniatowski, Joseph C - Approve - Approved - 01/12/2009 0936
  Instructions:

ATTACHMENTS

Attachments

1. 08-ESQ-335 att IH Technical Basis Assessment.doc
2. 08-ESQ-335 WRPS LTR Notification of Industrial Hygiene Technical Basis Assessment.doc

COLLABORATION

COMMENTS

Poster Gano, Becky - 01/12/2009 1001

CLOSED

RECEIVED
JAN 12 2009

Task# ORP-ESQ-2008-0344

E-STARS[R] Report
Task Detail Report
12/30/2008 0839

TASK INFORMATION

Task#	ORP-ESQ-2008-0344		
Subject	CONCUR:08-ESQ-335; NOTIFICATION OF INDUSTRIAL HYGIENE TECHNICAL BASIS ASSESSMENT		
Parent Task#		**Status**	Open
Reference	08-ESQ-335	**Due**	
Originator	Gano, Becky	**Priority**	High
Originator Phone	(509) 376-6004	**Category**	None
Origination Date	12/30/2008 0835	**Generic1**	
Remote Task#		**Generic2**	
Deliverable	None	**Generic3**	
Class	Long Term	**View Permissions**	Normal

Instructions

Correspondence is being routed for concurrence via hard copy. Once you receive the correspondence, please approve or disapprove electronically via E-STARS and route to next person on the routing/concurrence list.

BCC:
ESQ OFF FILE
ESQ RDG FILE
J.C.PONIATOWSKI, AMD
W.J.TAYLOR, ESQ
K.A.HOAR, VCD
R.L.URIE, VCD

RECORD NOTE:

ROUTING LISTS

1 Route List Active

- Urie, Richard L - Review - Awaiting Response - Due Date 1/8/09 R.L.
  Instructions:
- Hoar, Kenneth A - Review - Awaiting Response - Due Date 1/8/09
  Instructions:
- Taylor, William J - Review - Awaiting Response - Due Date 1/9/09
  Instructions:
- Poniatowski, Joseph C - Approve - Awaiting Response - Due Date 1/12/09
  Instructions:

ATTACHMENTS

Attachments

1. 08-ESQ-335 att IH Technical Basis Assessment.doc
2. 08-ESQ-335 WRPS LTR Notification of Industrial Hygiene Technical Basis Assessment.doc

COLLABORATION

COMMENTS

No Comments

TASK DUE DATE HISTORY

No Due Date History

SUB TASK HISTORY

No Subtasks

-- end of report --

APPENDIX C - INTERGRATED SAFETY MANAGEMENT SYSTEM EVALUATION FORM

ISMS Evaluation
ESQ-OA-IP-01-R1
Issued 01/21/09
Tank Operations Contractor
Industrial Hygiene Technical Basis Assessment

For each of the following identify whether the report:

S = Identified a strength

W = Identified a weakness

N = Found the topic with no special strength or weakness

N/A = Did not address the topic

Topical Area	Evaluation	Comment (optional)
Core Function 1: Define the Scope of Work	W	Field work OK, weak at program level
Core Function 2: Analysis of Hazards	N	
Core Function 3: Develop and Implement Hazard Controls	N	
Core Function 4: Perform Work Within Controls	N	
Core Function 5: Provide Feedback and Continuous Improvement	W	
Principle 1: Line Management Responsibility for Safety	W	
Principle 2: Clear Roles and Responsibilities	W	Including weak interfaces with Ops and Eng.
Principle 3: Competence Commensurate with Responsibilities	N	
Principle 4: Balanced Priorities	W	
Principle 5: Identification of Safety Standards and Requirements	W	
Principle 6: Hazard Controls Tailored to Work Performed	W	
Principle 7: Operations Authorization	N	
Supplemental Principle 1: Highly-Reliable Operational Performance	W	
Supplemental Principle 2: Individual Attitude and Responsibility	S	Current workforce usually performs work correctly in absence of program Procedures.
Supplemental Principle 3: Performance Assurance	W	
Supplemental Principle 4: Organizational Performance Improvement	W	

APPENDIX D – ASSESSMENT TEAM BIOGRAPHIES

Richard L. Urie, Team Lead

Mr. Urie is certified in Industrial Hygiene (IH) by the American Board of Industrial Hygiene, # 3681; and is co-certified in safety, but the Board of Safety Professionals, #12248. He holds a masters degree in Environmental Science from the University of Colorado - Denver and a Bachelor of Science Degree in Community Health, from the University of Northern Colorado. He has practiced IH and safety since 1980, with project experience at over 20 major Comprehensive Environmental Response Compensation and Liability Act Sites and 4 U.S. Department of Energy (DOE) facilities within the western United States. He initiated and managed an IH consulting firm from 1988 to 1999, employing 5 Certified Industrial Hygienists and has provided assessments, training, and consultation to over 400 institutions and businesses in the United States, Germany, Kuwait, Iraq, Indonesia, Taiwan, and Australia. He has served as the team lead for the Department of Homeland Security - Biological Emergency Support Team as a member of the HAZMAT Team at the Los Alamos National Laboratory (LANL) and worked directly with the Centers for Disease Control Infectious Disease Branch and the National Institute for Occupational Safety and Health in the response to a suspected bioterrorism event and in the establishment of response planning for perceived targets of opportunity in New York City, New York. He supported research in airborne agricultural bioterrorism through LANL and Texas A&M West. Examples of past IH assessments performed by Rich Urie include:

- PNL - Hanford Pre Tiger Team IH programmatic assessment & HAZWOPER training.
- LANL Readiness Assessment of the TA-54 Decontamination, Volume Reduction System & training.
- Rocky Flats Plant post Tiger Team IH HAZWOPER programmatic assessment and generation of the original HAZWOPER Health and Safety Program.
- U.S. Army Support Operations Iraq/Kuwait: IH risk assessments & training.
- Freeport Indonesia annual IH programmatic Assessments and staff training program.
- Adolph Coors Company IH Emergency Preparedness Assessment and Training.
- Homestake Gold Mine IH Programmatic Assessment.
- National Aeronautics and Space Administration (NASA) White Sands Test Facility IH field Assessments.
- AMOCO Production emergency response assessor, expert witness, and trainer.

He is the author of three publications on the subject of Personal Protective Equipment and associated risk assessments. One such publication was in collaboration with the American Conference of Governmental Industrial Hygienists. He has served as an expert witness in Federal court regarding related IH subject matter, and provided IH presentations to the U.S. Attorney General's Office, Department of Homeland Security, NASA, National Mining Engineers Conference, and DOE, among others. Mr. Urie is currently the IH program representative for the DOE Office of River Protection.

Mario Moreno, Team Member

Mr. Moreno holds a bachelor's degree from California State Polytechnic University in Chemical Engineering. He has provided engineering related services to the U.S. Department of Energy (DOE) for 20 years, including an assignment as the program manager for the Single-Shell Tank stabilization efforts. Mario, formerly with the tank farm nuclear safety/authorization basis; is currently working towards Industrial Hygiene (IH) certification under the DOE Office of River Protection IH mentorship program and has completed a number of IH technical courses. He has participated in numerous health and safety related assessments at the Hanford Site.

U.S. Department of Energy
Office of River Protection
P.O. Box 450, MSIN H6-60
Richland, Washington 99352

APR 15 2009

0900723

09-ESQ-076

Mr. Mike Armstead, Contract Manager
Washington River Protection Solutions LLC
2440 Stevens Center Place
Richland, Washington 99354

Dear Mr. Armstead:

CONTRACT NO. DE-AC27-08RV14800 – RESULTS OF ASSESSMENT A-09-ESQ-TANKFARM-001, PHASE I, "INDUSTRIAL HYGIENE TECHNICAL BASIS"

This letter transmits the results of the U.S. Department of Energy, Office of River Protection assessment of the Tank Operations Contractor "Industrial Hygiene Technical Basis." The assessment was completed on February 23, 2009.

The assessment resulted in four findings. The assessment team concluded that there are deficiencies in the programmatic assessment of new technologies to enhance worker safety and health, the selection and use of Direct Reading Instruments for air monitoring, the incorporation of the goal of applying the concept of "As Low As Reasonably Achievable" (ALARA) to chemical vapor exposures, and the selection process for personal protective equipment.

It should be noted that the Washington River Protection Solutions LLC is being requested to demonstrate how the ALARA concept shall be incorporated into the safety culture with respect to the monitoring and control of chemical vapors, as it is being applied to ionizing radiation hazards.

Within 30 days of receipt of this letter you shall respond to the assessment findings. The response shall include:

- The corrective actions that have been taken (i.e., compensatory measures) to control or remove any adverse impact from the non-compliant condition until sustainable corrective actions are implemented;

- The corrective actions that will be taken to identify the extent of condition, correct the causes, and prevent further findings (i.e., Corrective Action Plan); and

- The date when all corrective actions will be completed verified and compliance to the applicable requirements achieved (i.e., completion of an effectiveness review).

APR 1 5 2009

If you have any questions, please contact me, or your staff may contact William J. Taylor, Assistant Manager, Office of Environmental Safety and Quality, (509) 376-7851.

Sincerely,

Joseph C. Poniatowski
Contracting Officer

ESQ:RLU

Attachment

cc w/attach:
WRPS Correspondence

RECEIVED
APR 1 6 2009
WRPS
CORRESPONDENCE CONTROL

Attachment
09-ESQ-076
A-09-ESQ-TANKFARM-001

United States Department of Energy
Office of River Protection
Tank Operations Contractor
Industrial Hygiene Technical Basis Assessment

Final Report
A-09-ESQ-TANKFARM-001
March 10, 2009

Richard L. Urie
Team Leader

EXECUTIVE SUMMARY

The U.S. Department of Energy, Office of River Protection (ORP) conducted a Phase I assessment of the programmatic elements of the Washington River Protection Solutions LLC (WRPS) Industrial Hygiene (IH) program from January 16, 2009, through February 20, 2009. The assessment was directed at four elements of interest: past assessments, program technical basis and procedures; staff qualifications; and program management.

Conclusions

There are many very strong elements to the IH technical basis, including a well qualified staff; an extensive sampling and Personal Protective Equipment (PPE) inventory; proper utilization of accredited laboratories; and a solid funding base. The programmatic element for control, conveyance, and management of sampling data appears to be exceptional. WRPS has established over 80 documents related to IH information and directives. However, there is a missing tier of direction, which normally serves as the bridge between the general instructive programs and implementation. Specifically, there is an absence of written methodologies that normally provide the basis for the selection of PPE and some Direct Reading Instruments, which is a fundamental programmatic necessity. There is also a lack of strategic sample planning and data management, which is reportedly being addressed through the support of an expert IH consultative panel. In addition, there is an absence of a dedicated program for the review or development of new technologies for the purpose of enhancing worker health and safety, as required under 10 Code of Federal Regulations (CFR) 851, "Worker Safety and Health Plan."

An overriding observation of the WRPS technical basis is the prevalence of references made to IH professional judgment. ORP acknowledges and encourages the application of professional judgment, with respect to interpretation of directives and real time response to changes in operational needs or off normal events. However, there is an absence of the basis for decision making that has been critically reviewed, documented, and unilaterally applied to the WRPS operations. In addition, there is a lack of documentation of individualized IH decisions, which results in a lack of on-going and post event accountability. Lastly, the WRPS IH goals and objectives neither stipulate, nor discuss the requirement to reduce chemical exposures to As Low As Reasonably Achievable (ALARA), below the Occupational Exposure Limits (OEL). The absence of this goal is reflected in a prevailing attitude through IH and Industrial Hygiene Technician Staff, that chemical vapor exposures are adequately characterized and controlled with respect to conventional standards. ORP shall closely examine the WRPS health and safety culture in the second phase of the assessment to ascertain the degree in which this is problematic in regards to the impacts to the management of off normal events, continued efforts for improvement, and the incorporation of health and performance based goals.

FINDINGS

A-09-ESQ-TANKFARM-001-F01: Contrary to 29 CFR 1910.120(p)(5), "New Technology Program," 29 CFR 1910.120(o)(1),"New Technology Programs" and 1910.120(o)(2) WRPS has not established and implemented programmatic procedures which direct the evaluation and

introduction of new technologies into the WRPS Environmental Safety Health & Quality group, which includes the IH program.

A-09-ESQ-TANKFARM-001-F02: Contrary to 29 CFR 1910.132(d), 1910.132(d)(1), 1910.132(d)(1)(i), 1910.132(d)(1)(ii), 1910.132(d)(2), 1910.134(c) (1), 1910.134(c)(1)(i), and 1910.120(p)(8), WRPS has not established a written, fully comprehensive decision logic for the selection and use of PPE.

A-09-ESQ-TANKFARM-001-F03: Contrary to 10 CFR 851.21, "Hazard Identification and Assessment" there is a lack of specified criteria in the selection of direct reading air monitoring instrumentation and interpretation of results.

A-09-ESQ-TANKFARM-001-F04: Contrary to 10 CFR 851.21 and 851.23, there is an absence of written direction to incorporate the mandated goal of reducing worker exposure to carcinogens and all other chemicals to levels ALARA, below the Chemicals of Potential Concern (COPC) OEL.

OBSERVATION

A-09-ESQ-TANKFARM-001-O01: There is a lack of clear, consolidated information. The WRPS IH technical basis is overly complicated and confusing to both workers and outside viewers. There exists an uncharacteristically high element of deference to professional judgment.

Acronyms

ABIH	American Board of Industrial Hygiene
ACGIH	American Conference of Governmental Industrial Hygienists
AIHA	American Industrial Hygiene Association
ALARA	As Low As Reasonably Achievable
ANSI	American National Standards Institute
CFR	Code of Federal Regulations
CH2M HILL	CH2M HILL Hanford Group, Inc.
COC	Chain of Custody
COPC	Chemicals of Potential Concern
CPC	Chemical Protective Clothing
DOE	U.S. Department of Energy
DRI	Direct Reading Instrument
ESH&Q	Environmental Safety Health and Quality
HCC	Hanford Concerns Council
IH	Industrial Hygiene
IHT	Industrial Hygiene Technician
NIOSH	National Institute for Occupational Safety and Health
OEL	Occupational Exposure Limits
ORP	Office of River Protection
OSHA	Occupational Safety and Health Administration
PAPR	Powered Air Purifying Respirator
PEL	Permissible Exposure Level
PPE	Personal Protective Equipment
SST	Single Shelled Tank
STEL	Short Term Exposure Limit
TFC	Tank Farm Contractor
TFIH	Tank Farm Industrial hygienist
TLV	Threshold Limit Value
VOC	Volatile Organic Compound
WRPS	Washington River Protection Solutions LLC

Table of Contents

1.0 SURVEILLANCE SCOPE 1

2.0 SURVEILLANCE METHODOLOGY 1

3.0 DISCUSSION 1

4.0 CONCLUSIONS 13

5.0 FINDINGS AND OBSERVATIONS 15

6.0 REFERENCES (From DOE Standard IH Practices, DOE-STD-6005-2001 April 2001) 20

APPENDIX A. Principal Document Review and Comments
APPENDIX B. Industrial Hygiene Technical Basis Assessment of WRPS (PLAN), A-09-ESQ-TANKFARM-001
APPENDIX C. Integrated Safety Management System Evaluation Form
APPENDIX D. Assessment Team Biographies

1.0 SURVEILLANCE SCOPE

The scope of this 2009 Phase I assessment of the Washington River Protection Solutions LLC (WRPS) Industrial Hygiene (IH) program, is limited to the foundation of the program, involving an assessment of plans, procedures, risk assessment documents, staff qualifications, and documented management tools. Within this scope, the U.S. Department of Energy (DOE), Office of River Protection (ORP) team addresses the primary question: "Is WRPS properly planning, and effectively managing an industrial hygiene, occupational exposure assessment, and hazards management program that meets the intent of 10 CFR 851?"

2.0 SURVEILLANCE METHODOLOGY

The methodology of the assessment consisted of four discrete efforts, followed by Generator Assistance Program analysis based on the results of the assessment per the DOE 440.1-8, "Implementation Guide for use with 10 Code of Federal Regulations (CFR) 851." The four elements of the assessment were:

- A review of past assessments conducted by DOE, the Hanford Concerns Council (HCC) – expert panel, the CH2M HILL Hanford Group, Inc. (CH2M HILL) IH Program Health/Analysis presentation to the Executive Safety Review Board (September 25, 2008), WRPS "Industrial Hygiene Safety Management Program Plan-Management Assessment" - 0900116, the WRPS Fact Finding for 702AZ Condensate Drained from Ventilation Duct on December 17, 2008, Report NO. 2008-025; and the National Institute for Occupational Safety and Health (NIOSH), "Health Hazard Evaluation Report 2004-0145-2941;"

- A review and assessment of all available WRPS IH related documents which are generated or owned by the WRPS Environmental Safety, Health, and Quality (ESH&Q) division, plus select and pertinent tertiary documents that are referenced with the IH program documents;

- An evaluation of the IH personnel qualifications by way of a review of staff qualifications cards and through small group interviews of as many staff members as feasible; and

- A series of meetings with the WRPS IH manager and associated review of WRPS IH management records, data bases, and reports that reflect the current level of effort associated with IH treads analysis, program metrics, program planning, budgeting, staffing, self-assessments, and associated corrective actions.

3.0 DISCUSSION

Due to the relatively broad spectrum of the "Industrial Hygiene Technical Basis Assessment Phase I" scope of work; this section is simplified by being organized by the four basic elements, as follows: Review of Past IH Assessments; Document Review; Staff Qualifications; and Program Management. Each of these subsections refers to attachments, which provide specific methods and results or data points. Appendix A is a checklist generated from the performance evaluation criteria, as they pertain to the four primary assessment elements.

3.1 Past Tank Farm IH Assessments

A number of assessments, including two major third-party assessments have been performed on the chemical exposure elements of the Tank Farm IH program, over the last seven years. The two major assessments reviewed include the NIOSH "Health Hazard Evaluation Report 2004-0145-2941," released in July 2004 and the HCC commissioned report by an expert panel, entitled "The Industrial Hygiene Chemical Vapor Technical Basis," dated June 2008. These documents were reviewed to ascertain the historical concerns of the past contractor's program. One management assessment of the IH program was conducted by WRPS, since accepting operations on October 1, 2008, and in addition, ORP surveillance of WRPS response to an abnormal event, included some IH elements.

Under the current WRPS management assessment process, internal staff, including subcontractor personnel, perform an evaluation of the WRPS IH program, submit the results to the IH Program Manager and enter results into the Problem Evaluation Request system for tracking corrective actions. The results of the management assessment (WRPS-0900116, "Industrial Hygiene Safety Management Program Plan-Management Assessment," dated January 19, 2009) indicated four areas in need of improvement, improve an element of heat stress monitoring in a particular survey, maintaining procedures not used on a regular basis, issues on Right-to-Know Stations, and hierarchy of controls required by 10 CFR 851. The WRPS management assessment appears to be comprehensive in nature and some of the observations noted by WRPS are consistent with the ORP Assessment Team's observations, including the issue of some procedures not being updated since the implementation of 10 CFR 851 and deficiencies in the Personal Protective Equipment (PPE) selection process.

There are no WRPS assessments of IH practices during off normal events, other than a fact finding report at this time. The "ORP Management Concern S-09-ESQ-TANKFARM-003 WRPS Response to Abnormal Events" report was in draft form at the time of this assessment. However, it is of value to this assessment, as it provides direction in the review of IH procedures, relative to the chemical exposure risk assessment process, the documented process for selection and use of PPE, post event communications with the Hanford medical provider, selection and use of air monitoring instruments, and identification of exposure source materials.

The tank farm contractor transition briefing entitled "Industrial Hygiene Program Health/Analysis" dated September 25, 2008, provided only minimal amount of performance metrics of the IH program. Having an adequate set of metrics is needed since the overall goal of an IH program is the prevention of occupational disease, illnesses, and disorders that impact the health of workers; interfere with operational stability; and negatively impact the comfort and morale of personnel. As such, metrics that allow for the measurement and tracking of adverse impacts are necessary for the correction of causative factors in meeting this goal. Compliance with standards such as Threshold Limit Values (TLV) is a mandatory, secondary objective that assists in meeting this goal. Effort should be provided in developing leading indicators as much as possible.

3.2 Document Review

3.2.1 General

The Assessment Team reviewed over 80 WRPS IH related procedures, fact sheets, supporting documents, or sets of documents in the course of the assessment. They were comprised of top tier health and safety and IH management plans, staff qualifications plans and requirements, technical directives, quality assurance directives, operational procedures, performance tracking documents, an exposure monitoring data base, and WRPS web page based hazard communication resources. Appendix A of this assessment contains a list of those documents and observations associated with each document, as warranted.

The collective set of programmatic documents address a cadre of preventative medicine elements including hearing conservation, ergonomics, heat and cold stress, illumination, blood borne pathogens and others addressed in Appendix A. Of these elements, the thrust of the program is dedicated to the evaluation and control of chemical exposures. The chemical monitoring and control aspects of the written programs contain some excellent, advanced level efforts that have been developed as part of the technical basis for the understanding and control of chemical exposure associated with the waste constituents. Documents pertaining to the characterization of tank headspace vapors, personnel exposure sampling results, occupational exposure limits and liquid chemical constituents form the technical basis which serves as baseline risk assessments for the decision logic that follows in procedural documents. In addition, there are documents which provide very specific directions on IH monitoring, procedural processes, PPE, and administrative controls. Many of these documents at the secondary and tertiary levels are highly instructive and self-explanatory.

However, there are four general observations germane to a number of IH related procedures, one of which was also self-identified by WRPS. They are:

- The first is a lack of written core decision logic, which results in excessive deference to an IH professional judgment approach;

- Secondly, the collective state of the programmatic elements are very voluminous, somewhat contradictory (see "Example of Concern" on next page) and difficult to interpret at the implementation level. Both manifestations of the program may be cause for confusion and have a negative impact on the functionality and credibility of the program as a whole, particularly from interested parties not involved in the day-to-day IH operations.

- In addition, a sub-set of programmatic IH procedures pre-dated 2005 should have been revised to include as required by 10 CFR 851.23(a)(9) American Conference of Governmental Industrial Hygienists (ACGIH), "Threshold Limit Values for Chemical Substances and Physical Agents and Biological Exposure Indices," 2005 referenced

TLVs when they are lower (more protective) than permissible exposure limits found in 29 CFR 1910. For example, TFC-ESHQ-IH-STD-06, "Hearing Conservation Program," Revision A, dated October 28, 2004, was not revised to include the 2005 TLV, it should be noted the actual TLV in this case was not revised in 2005 it remains, 85 decibels, A-weighting scale [dBA] 8-hr Time Weighted Average;

- Communications between WRPS and AdvanceMed Hanford regarding medical surveillance, is not well defined. Medical surveillance stipulated for either pre-placement or annual exams typically do not provide the medical surveillance requirements to be met by the occupational medical contractor or in the absence of this information feedback – verification that the requirements were met before placement or continued placement. For example, 29 CFR 1910.1001(I), "Medical Surveillance" requires a specific pre-placement examination before an employee can be designated as an asbestos worker but TFC-ESHQ-IH-STD-04, "Asbestos Control – Facility Management/General Industry" does not document how these pre-placement requirements are transmitted to the occupational medical office or verified to have been met before placement;

- Lastly, the programmatic goals fail to address the requirement for monitoring and controlling chemical exposures to As Low As Reasonably Achievable (ALARA), below the Occupational Exposure Limits (OEL). The existing written goal of maintaining exposures below 50% of the OELs is not consistent with the requirements stipulated in DOE Orders, nor with the ACGIH, 2005 TLV booklet, incorporated into 10 CFR 851. The application of an ALARA goal is not only mandated, but is of particular significance to the health and safety of workers who deal with a vast mixture of chemicals, of unknown cumulative toxicological effects. In addition, there is no written consideration of the margin of sampling error associated with the existing sample collection and analysis utilized, nor for the use of Direct Reading Instruments (DRI) to monitor for short term exposure limits.

  Example of Concern:

  TFC-ESHQ-S-IS-C-02-RevB-12 (February 2008) states: "Some of the chemicals in tank waste and condensate can damage the skin, irritate the skin, or be absorbed through the skin"

  RPP-34147, Revision 0 (June 2007) states as the last statement of the conclusions: "Therefore, dermal exposure hazards from tank waste is extremely low and requires no additional Controls"

  Fact Sheet EH-0607 (October 2007) "Dermal Protection from Tank Waste, Condensate and Tank Vapors" refers to RPP-34147 for direction, suggesting (but unclear) that neither silver shield® Chemical Protective Clothing (CPC) or any other designated CPC is warranted for Tank Farms Operations at the listed tank sites.

3.2.2 Lack of Clear, Consolidated Information

WRPS maintains a hierarchy of programmatic documents, which flow down from general, to more specific information and directives. ORP recognizes that such a process is necessary due to the voluminous nature of the materials. However, the process, which has evolved out of response to needs, is cumbersome and sometimes lacks clarity in an end result. As an example, a key document is the "Tank Operations Contractor Health and Safety Plan." Normally, such a plan contains necessary instructions to workers as a standalone, pragmatic document which addresses eight fundamental subjects, mandated in 29 CFR 1910.120 (P). The sections of the WRPS document that address IH subject matter, collectively refer to 32 links necessary to understand the basic components, which in turn refer to over 200 secondary links. The difficulties in locating and extracting specific, operational IH information were reflected by Industrial Hygiene Technicians (IHT) during a small group interview. Yet the documents as a whole, fail to adequately address three of the eight mandated items. The subjects that are absent or deficient are: 1) Medical Surveillance; 2) New Technologies Program; and 3) Emergency Response, including PPE.

Example: INDUSTRIAL HYGIENE INSTRUMENTATION PLAN, TFC-PLN-64, REVISION B-1, summarizes the selection of DRIs as a skill of IH Professional decision as follows: "Instruments will be selected by the project Industrial Hygienist (IH) as part of the development of the sampling/monitoring plan and will be based on the hazard to be measured"

Another confusing element pertains to the "IH Exposure Assessment Strategy" (TFC-PLN-34, Revision D-2), which discusses Short Term Exposure Limits (STEL) Plan and Ceiling Limits, but is non-specific in the application to the strategy. A sub-section in Appendix B of the plan, states: "Ceiling limits are generally airborne concentrations which should never be exceeded…Certain chemicals have STELs or ceiling limits that have unique sample duration periods. Averaging times for the TF COPCs are listed in Appendix B." However, no further instruction is provided in Appendix B. (Note: this section is referenced as being adapted from the American Industrial Hygiene Association (AIHA) 1998, Leidel 1977, and ACGIH. It appears that the supporting appendices were not included in the WRPS plan.)

3.1.1 Personal Protective Equipment Decision Logic

A key element within the WRPS programmatic directives, which lacks reproducible methodology is that required for the selection of PPE. Although there are a number of good documents describing Chemicals of Potential Concern (COPC) and individual considerations of selection, there is no indication as to what PPE is available onsite; and neither a process nor a defensible, pre determined selection of PPE, which can be consistently utilized by the IH Staff.

3.2.3.1 Chemical Protective Clothing and Chemical Eye Protection

A review of documents related to PPE discuss tank waste chemical constituents relative to dermal exposure, but fall short of a discussion of the specific selection of CPC and eye protection associated with the toxicants of the waste and a pH of 13 (highly corrosive). In addition, there is no consideration of precautionary measures for such off normal effects as a splash involving a high body surface area, and/or the eyes. The "Personal Protective Equipment" TFC-ESHQ-S-C-02 is the baseline directive for the selection of chemical protective clothing and eye protection, yet the section on eye protection is limited to safety glasses for impact protection only. The CPC and glove section of The "Industrial Hygiene Exposure Assessment Strategy" TFC-PLN-34 D-2, refers to this document for direction on skin protection. A supporting document, the "Tank Waste Dermal Exposure Assessment" RPP-34147, serves as an extensive study of potential chemical absorption and justification for not issuing Silver Shield® or 4H® gloves for stipulated tank farms. However, each of the documents fail to address the following significant items:

- Protection from skin burns or dermatitis due to chemical contact of the hands;
- Protection from skin burns or large surface area chemical absorptions, from a large scale splash;
- the health impacts and protection of the eyes associated with liquid splash; and
- the documents collectively fail to provide a pre-determined decision or a clear decision process for the selection and service life of CPC. Such common considerations associated with multiple chemical breakthrough times, permeation rates, and degradation of various materials used in the selection and use of CPC is absent.

> **Note:** TFC-ESHQ-S-IS-C, Rev B-12 (PPE), Section 6.3.1 states that *some chemicals in tank waste and tank condensate can damage the skin, irritate, or be absorbed by the skin and to consult IH in the work planning process.*

The IH technical basis requires CPC decision logic and methodologies. The level of effort necessary to fill in the gaps is potentially minor, but significant to the process.

3.2.3.2 Respiratory Protective Equipment

The Tank Operations Contractor Health and Safety Plan states the following:

"Personal protective equipment includes use of respiratory protection approved by Industrial Hygiene, either as specified in job procedures, Tank Vapor Information

Sheets, or job hazard analyses or through voluntary use even though not required for compliance with the occupational exposure limit."

In addition, the WRPS Respiratory Protection Plan is a 54-page document, of which two pages of text and a single page figure are provided on the subject of respirator selection. The information provided, is in general terms and includes a statement that **"Specific guidance for respirator selection is available from NIOSH and OSHA."** Neither document provides specific information that is relevant to what respirator options are available to WRPS, the applicability of respirator cartridges to various COPCs, including carcinogens or mixed contaminant considerations; and those respirator ensembles that are not approved for specific applications, such as an acid gas cartridge is not approved for nitric acid nor hydrogen sulfide gas. No other documents were observed to address the decision logic for consistent decision making by IHs throughout the program.

During the course of interviews one IH professional discussed a recent event, in which a small quantity of methylene chloride was spilled and the IH was tasked with taking photos of the spill scene. The IH professional judged the exposure was below the TLV for methylene chloride, but utilized respiratory protective equipment on a voluntary basis. The respirator selected for the task was a Powered Air Purifying Respirator (PAPR) with (presumably) an organic vapor cartridge. The use of a PAPR was made in error, on two accounts: 1) PAPR is not approved for methylene chloride by manufacturers due to poor adsorption to activated carbon; and 2) Occupational Safety and Health Administration (OSHA) specifically mandates the use of supplied air respirators for potential exposure to methylene chloride vapors exceeds the Permissible Exposure Limit (PEL) or STEL (29 CFR 1910.1052(g)). In addition, there was no documented effort to perform a simple ventilation calculation to document the PEL or STEL was not exceeded. The professional judgment exercised in this situation demonstrates a potential outcome associated with the lack of written selection protocols and directions. Additionally, there is no common mode of documentation on the selection process of respiratory protection by the IH Professional. This in turn, leads to the inability of a technical peer review and a single point error for the respiratory selection process. Professional judgment alone is an insufficient technical basis for the selection of respiratory protection. WRPS must identify decision logic for unilateral application at tank farms.

3.2.4 Clarification of DRI Applications and Decision Logic

There are excellent documents within the WRPS program, which describe the use and calibration of IH instruments and a significant amount of data available for the characterization of COPCs. However, there is an absence of written directives or fact sheets that specifically demonstrate the applicability of some DRIs relative to what is being surveyed in sampling plans and the basis for turn back values. There are also tables which list the COPCs and the appropriate instrument or reference to a pump or SUMA® method, however, there is no summary for such operational and interpretative needs as the detection limits for the DRIs, cross sensitivity & correction factors, the range

relative to the COPCs and therefore, what determines a DRI action level. This absence of standardized criteria was reflected in an interview with IHTs, as inconsistencies in the assignment of DRIs for similar operations by different IHs. The following example indicates a failure associated with the absence of decision logic:

Example: Tank Farm Work Instruction WDL#111243, dated December 12, 2008, calls for the monitoring of organic and ammonia vapor, yet provides action levels for the described task as follows:

- Organic Vapors 2 ppm
- Ammonia 12 ppm
- Formaldehyde 0.2 ppm

The following failures occurred:

1. Formaldehyde cannot be detected by the prescribed instruments*.
2. Formaldehyde, by virtue of multiple toxicological risks, including carcinogenicity, irritation, and pulmonary sensitization, is a priority COPC, as evidenced by the lowest OEL.
3. Yet, the document fails to identify that the formaldehyde OEL is a ceiling value, meaning that an exposure of 0.3 ppm is not to be exceeded. This is a contradiction to the WRPS IH Exposure Assessment Plan (3.11) that mandates screening COPCs and controlling exposure to below 50% of the OEL. Not only is the action level above 50%, these action levels are intended for time weighted average exposures – not ceiling limits, which could instantaneously be exceeded.

*ORP confirmed that formaldehyde is a not COPC to be monitored at this location per the TVIS, and reference was mistakenly made on this work instruction.

ORP confirmed that formaldehyde is not a COPC to be monitored at this location, per RPP-RPT-29262, A-Prefix Tank Farms Vapor Hazard Characterization Report, Revision 0 and this reference was a quality assurance error on the work instruction, not a technical omission.

The WRPS IH technical basis does not offer a clear, documented decision logic and justification for utilizing or not utilizing DRIs for assessing possible excursions of exposure above baseline personal exposure data, as stated in Section 3.11 of TFC-PLN-34, Revision D-2, "IH Exposure Assessment Strategy." This plan does identify in Attachment E, a series of factors to be considered in the establishment of DRI action limits, and states: "The Safety and Health Director will review current screening action levels for appropriate conservatism," - a reference to professional judgement. Therefore, in the absence of decision logic, a review was conducted of the flow down of documents on this subject, which included the Tank Farm Chemical Exposure Hazard Analysis (series of reports), Tank Farms Vapor Characterization Report (series), Management of Vapor Control Zones, Instrumentation instructional documents (series), Fact Sheet:

"Monitoring for COPCs in the Tank Farm," and representative IH Monitoring and Sampling Plans, and Work Hazard Analysis documents. Questions that remain, would then include: Which Volatile Organic Compounds (VOC) are detected within the range and sensitivity of a 10.6 ev Photo Ionization Detector and which are not? When is a flame ionization detector then used and for what sub section of the COPCs? What common non VOCs such as N-Nitrosomethylethylamine, nitrous oxide, and mercury are not being monitored and why not? Are correction factors applied to combustible gas indicators calibrated with isopentane, but used primarily for hydrogen monitoring? What are the margins of error and interfering compounds to be considered for use of DRIs? These elements of the IH Exposure Assessment strategy appear to be absent. ORP recognizes that DRIs are an important element of the overall strategy, and that there are limitations in their application; however, the process of determining the use, limitations, and associated applications must be documented, to support designated use.

Formaldehyde has a ceiling value (not to be exceeded) of 3 ppm, but a WRPS action level of 2 ppm. The accuracy of the detector tube may range from +/- 35% to +/- 50%, which indicates that ceilings could be exceeded before actions are initiated. In addition, detector tubes are cumbersome, time consuming to operate, and difficult to read. The logistics of the DRI sampling and the margin of error suggest that either the action level or the mode of DRI sampling may not have been subjected to the same decision logic as other COPCs, indicating inconsistency.

3.3 STAFF QUALIFICATIONS

WRPS has an extensive staff of 54 IH professionals, which includes 3 managers (of which one is certified in IH), 9 industrial hygienists (of which 5 are certified in IH) and 32 IHTs, who are represented under the collective bargaining agreement.

There are qualifications standards which identify baseline requirements and responsibilities for IH Professional (TFC-BSM-TQ-STD-01, "Technical Staff Qualification Requirements") and IHT (TFC-BSM-TQ-STD-07, "Industrial Hygiene Technician Training and Qualification Requirements.") In addition, WRPS maintains both IH and IHT qualification cards (350882, "Qualification Card for Industrial Hygiene Professional," Revision 0804.1 and 350292, "Qualification Card for TOC Industrial Hygiene Technician," Revision 0608.1). The process does not separately address specialty positions such as the IHT Lead nor does it address any special requirements for the IHT responsible for being the IH equipment custodian or respiratory protective equipment custodian.

The IH professional qualifications standard and process is relatively rigorous. The IH professional qualification process is primarily directed at having a Bachelors degree in IH or related science, two years of IH experience and one year of IH experience in the nuclear industry or equivalency; plus extensive required reading, self-study and procedural

orientation. The IH professional is required to obtain 24 hours of continuing education per year. A majority of the IH professionals on staff hold current certifications through the American Board of Industrial Hygiene (ABIH). A sample review of completed IH professional qualification card was not part of the scope of Phase I of the assessment.

The IHT qualification process requires an Associate Degree in safety and health technology, applied science or related science, one year job related experience or equivalent combination of education and experience plus extensive in-house training on fundamentals and instrumentation. The IHT process does include hands on training in the classroom and periodic updates on seldom used instruments. Sample observations of IHT process qualification or requalification was not part of this assessment, but will be part of the Phase II assessment.

Feedback from group interviews involving 31 of the 54 IH professional staff found them to be very aware of the Tank Farm IH issues. The majority of the IH professionals on staff have extensive commercial and DOE Complex experience in the subject areas of the assessment. The IH professional staff was very open and provided their candid professional opinion of the current WRPS IH program and areas for possible improvement (e.g., training). A common questioned asked by the Assessor's during the interviews were on the subject of level of effort expended on tank farm vapor sampling – over board, too little or just right. The consensus was that the vapor sampling was larger then should be in relationship to the commercial industry but it was understood and accepted. The morale of the IH Professional staff seems to be holding up during the last few years both CH2M HILL/WRPS have been able to maintain a high level IH staff (it should be noted a current WRPS employee is going to take part one of the ABIH certification process this coming June). There was common consensus among the WRPS IH professional staff that there is generally room for improvement of the program but no other portion of the IH program is Less Than Adequate due to the attention being given to the Tank Farm vapor issue. Another common question asked by the Assessor's during the interviews was in regards to the nature of interface or projects which ally the fear of workers and result in a prudent level of risk information regarding Tank Farm vapor issues; for which several interfaces were described including the Chemical Vapor Solutions Team, Presidents Council, and Chemical Hazard Awareness Training. However, it appears a sustained effort to provide risk information to workers about historical and ongoing sampling results, including IH instrument capabilities and limits in relation to the radiological instrumentation has not been accomplished.

The control of IHT field data forms, Chain of Custody (COC), conveyance to IH records, management of sampling data, and distribution of employee occupational exposure notification is controlled by TFC-ESHQ-S_IH-C-46, "Industrial Hygiene Reporting and Records Management," Revision B-1. The electronic record copy of sampling is maintained on the Tank Farm Industrial Hygiene (TFIH) database from transposed field notes and backed up every evening on hard drive. During discussions with the first group of IHT it was very clear they understood the rules of COC. The ORP field observations of sampling taken by IHTs and conveyance of the sample media through processing and records management will be a portion of the Phase II assessment. Interviews with the WRPS personnel responsible for maintaining the TFIH database appear to be well versed in the capability of

TFIH database and associated software. The TFIH database software is currently maintained by Lockheed Martin Services, Inc.

A majority of the IHT have at least five or more years experience working as IHT in Tank Farms or at the Hanford Site. Based on interviews the IHTs who have responsibility as the IH equipment custodian and respiratory expert have extensive knowledge (both have over 20 years Hanford experience) of their respective fields and were able to discuss in adequate detail technical subjects of their respective assigned job areas. One follow up question to WRPS management was on the succession planning in case either IHT decides to retire, the feedback provided was that the respiratory protection program is well covered but given the technical complexity of the IH equipment custodian duties, there were succession issues which are being actively pursued. The Field IHTs appear to have an adequate understanding of the basics of the most commonly used IH instruments. Based on response to questions, the IHT provided a mixed response to the ease of use of IH procedures and sampling plans, on occasion a work pause was needed for clarification. Another common theme among the IHT, was there was different responses based on the same vapor hazard between Base Operations, Single-Shell Tank (SST) Retrieval, and Closure, including the area of down posting a Vapor Control Zone. Not all IH sampling plans require personnel monitoring/sampling in the absence of it being mandated as part of the work task. There is a general reluctance for worker's to wear the sampling apparatus on a voluntary basis, as there is a complaint of it being cumbersome.

3.4 Program Management

The WRPS IH Management efforts address a cadre of departmental elements such as staff training, budgeting, data management, quality assurance, scheduling, review and updating of written programs, and strategic planning. WRPS IH program management is centered within the ESH&Q group of WRPS, although the majority of IH personnel are deployed to Base Operations or SST Retrieval and Closure for operational support. The IH program manager is a Certified Industrial Hygienist and responsible for central functions such as program metrics, data management, technical basis risk assessments, and primary procedural components.

3.4.1 Goals, Metrics and Trends Analysis

The current state of the sample data is relatively unprocessed, other than through the tracking of constituent results above the 10% and 50% OEL status for existing COPCs. However, WRPS is currently in the process of re-assessing the baseline data acquired. As part of this effort, they are planning the consolidation of the data, in a manner which allows for the assessment of both the statistical approach to be used in a re-characterization of potential exposures and in the identification of data gaps. This effort will in turn, drive the number and location of additional screening and routine monitoring efforts. The methodology will reportedly be developed in conjunction with an independent expert IH panel.

There is an ongoing effort to consolidate data and assimilate upward or downward trends in other IH program elements such as hearing conservation, non-ionizing radiation, heat stress, cold stress, and ergonomics. It is noteworthy that WRPS IH managers and staff appear to agree per interviews, that the vapor control program has monopolized their resources and there is some frustration that: 1) they have exceeded industry standards in addressing the concern; 2) there is no serious vapor health threat; and 3) other programmatic areas of need are not being addressed as they would prefer.

Example of WRPS Sampling Strategy under consideration

Frequency of sampling (low-high)

Carcinogen	H	H	H
Highly Toxic	M	H	H
Irritant	L	M	H

% of OEL----------›

3.4.2 The Role of Professional Judgment

WRPS points out that it maintains a high caliber of staff and that professional judgment is a necessary element to the program. In the factual accuracy response, WRPS states: "The American Conference of Governmental Industrial Hygienists and the American Board of Industrial Hygiene both recognize that professional industrial hygienists must evaluate data and information and make professional judgments."

ORP recognizes not only the value, but the necessity of professional judgment - particularly in the event of off normal operations. Such judgments is based not only on training and experience, but also on baseline programmatic guidelines that have been reviewed, approved, and incorporated into the programmatic foundation of the health and safety program. It is neither feasible nor desirable to attempt to dictate directives for variables that occur with environmental and operational dynamics. However, the fundamental methods in which decisions will be made, in a consistent, defensible mode is essential to the credibility of the program. As an example, NIOSH, arguably the international subject matter expert on respiratory devices devotes 41 pages to the process

of respirator selection in the "NIOSH Guide to Industrial Respiratory Protection." A professional judgment is required in the understanding and application of this document. However, the narratives, checklists and flow charts are provided to "insure uniformity and adherence" to established methods established jointly by NIOSH and the Occupational Safety and Health Administration (OSHA). Similar guides, established as industry standards are available for the selection of CPC, eye protection and other PPE elements. All of these guides require professional judgment in the application process, with respect to the vast mixture of COPCs and environmental conditions. What is missing from WRPS is clearly stated policies with respect to: 1) the need; 2) the application; 3) WRPS inventory or options available; and 4) standard methods for decision making.

ORP acknowledges that WRPS has some elements of the selection process incorporated into programmatic documents, such as a discussion of the service life of respirator cartridges and an extensive study on the application of silver shield® gloves and mercury exposure. Yet, there are major elements missing and most importantly, no standard means of directing the use of those elements in a cohesive fashion, and there is no defined process for documenting the basis for the decisions made in the absence of standard methodologies.

The same is true with respect to broad range DRIs. Table 1 of the "Monitoring for COPC in Tank Farm Vapors" list instruments that respond to multiple COPCs, but does not address the means of discriminating amongst those with very low TLVs and those that have high TLVs. There appears to be a mandate for utilizing detector tubes for some, and broad range instruments such as the TVA and ppbRAE for others. Some COPCs appear to be monitored by either option. The argument of utilizing professional judgments for the selection of instruments is only defensible, in the presence of a sound technical basis, which provides each IH with the pre determined range, sensitivity, correction factors and unknowns associated with the DRI table. To assume that each IH has performed this task independently in a correct, consistent manner and maintains the basis for the decision logic is not prudent. In addition, there is no evidence to suggest that such factors and thought process, are in turn, documented with each work instruction or operational document.

The level of effort required to either: 1) provide pre established decisions for PPE and DRIs for the waste and condensate per Tank farm; or 2) to provide decision logic directly, with the aid of internet links is minimal. To have this fundamental element absent from both a written PPE plan and sampling strategy plan is not the industry norm.

4.0 CONCLUSIONS

4.1 Positive observations and trends

- The breadth and detail of most programmatic WRPS IH documents is very good.
- The effort on evaluating baseline chemical hazards has been very advanced.

- The program for control, conveyance, and management of sampling data appears to be exceptional.

- The WRPS Staff offers considerable experience, held to high qualification standards, self-confident and professional.

- The WRPS IH related instrumentation, data base, and overall resources are exceptional.

- WRPS is upgrading risk communication process, including the use of outside subject matter experts.

- WRPS is pro actively supporting an independent panel for additional vapor monitoring and control considerations.

- WRPS is reportedly improving worker access to material safety data sheets through the establishment of an electronic on-line Material Safety Data Sheets program. This action appears to be prompted by two observations that result from the WRPS self-assessment, finalized on January 19, 2009.

4.2 Opportunities for Improvement

- The compendium of IH Information and directives could be consolidated for IH and workers, in a manner more easily acquired and understood.

- WRPS should incorporate exposure characterization and control goals and objectives into the IH technical basis.

- WRPS should define the range for professional judgment within the IH program to a reasonable extent within the technical basis documents.

- WRPS should review and evaluate worker occupational illness reporting as an element of the hazard identification and assessment process, per 10 CFR 851.21(7) and 10 CFR 851.26 94)(b). The consideration of reported target organ or systemic effects and related causative agents within the tank farm may be an important added element of the IH strategy. The overall goal of the compliance with this requirement being the evaluation of reports in a manner which allows reconsideration of the effectiveness of current protective measures with regards to the monitoring and control strategy. For example, in the event that asthma and related reactive airways disease is identified as a complaint of tank farm workers and recognizing that formaldehyde [a COPC] has a causal link to asthma, special consideration may then be directed at increasing the nature and frequency of formaldehyde monitoring.

4.3 Assessment Follow-up Items

As part of a future assessment (Phase II), actual field implementation of the documented WRPS IH program will be evaluated with special emphasis on:

- Observations of IH Technicians going through re-qualification or initial qualification, actual sampling (source, personnel, or area) and processing of sample media for laboratory analysis and execution of the Work Instructions/Job Hazard Analysis (TFC-ESHQ-S_SAF-C-02, "Job Hazard Analysis," Revision D-5). The IH Professionals qualification card process consists mostly of required reading with some actual case studies like assigning DRIs and sample data analysis.

- Per several months of observation, formal interviews, and review of one off-normal event (702-AZ); there is a general concern that the prevailing opinion within the WRPS IH department, that Tank Farm static chemical vapor and condensate exposures are fully characterized and controlled, is having negative impacts the degree of WRPS vigilance in anticipating, preparing for, and responding to off-normal events and secondarily, assessments of new or improved control measures. As part of Phase II the assessors will perform field assessment of drills for off-normal waste release and actual should any should occur.

- The process of decision making in regards to PPE and instrumentation shall be closely evaluated.

- The monitoring, controls and associated documentation of off-normal event decision making.

- The effectiveness of the sample and data quality assurance process.

- The nature of the safety culture within WRPS.

5.0 FINDINGS AND OBSERVATIONS

5.1 Findings

A-09-ESQ-TANKFARM-001-F01: Contrary to requirements WRPS has not established and implemented programmatic procedures which evaluate and introduce new technologies into the WRPS ESH&Q Assurance group, nor IH program. WRPS has clear evidence that portions have been made, such as the addition of upgraded IH instrumentation. A formal and concerted effort to periodically evaluate new technologies for worker health and safety is an important, but missing feature of this high end health and safety program.

Requirements:

29 CFR 1910.120(p)(5), "New Technology Program" The employer shall develop and implement procedures meeting the requirements of paragraph (o) of this section for introducing new and innovative equipment into the workplace.

1910.120(o)(1): The employer shall develop and implement procedures for the introduction of effective new technologies and equipment developed for the improved protection of employees working with hazardous waste clean-up operations, and the same shall be implemented as part of the site safety and health program to assure that employee protection is being maintained.

1910.120(o)(2): New technologies, equipment, or control measures available to the industry, such as the use of foams, absorbents, neutralizers, or other means to suppress the level of air contaminants while excavating the site or for spill control, shall be evaluated by employers or their representatives. Such an evaluation shall be done to determine the effectiveness of the new methods, materials, or equipment before implementing their use on a large scale for enhancing employee protection. Information and data from manufacturers or suppliers may be used as part of the employer's evaluation effort. Such evaluations shall be made available to OSHA upon request.

Discussion:

WRPS has not established and implemented programmatic procedures which evaluate and introduce new technologies into the WRPS ESH&Q Assurance group, nor IH program. There is clear evidence efforts have been made, such as the addition of upgraded IH instrumentation. However, given the history of the tank farm vapor exposure monitoring & controls challenges and the history of abnormal events, a formal and concerted effort to periodically evaluate new technologies for worker health and safety is an important, but missing feature of this high end health and safety program.

A-09-ESQ-TANKFARM-001-F02: Contrary to requirements WRPS has not established written, comprehensive decision logic for the selection and use of PPE. WRPS has developed risk assessment documents, as well as a respiratory protection plan and PPE plan. However, there are no defined action levels and selection criteria available for review for respiratory protective equipment, CPC, nor chemical protection of the eyes; and there is no element that addresses the selection process or protocol of use for an emergency response.

Requirements:

29 CFR 1910.132(d): Hazard assessment and equipment selection.

29 CFR 1910.132(d)(1): The employer shall assess the workplace to determine if hazards are present, or are likely to be present, which necessitate the use of PPE. If such hazards are present, or likely to be present, the employer shall:

29 CFR 1910.132(d)(1)(i): Select, and have each affected employee use, the types of PPE that will protect the affected employee from the hazards identified in the hazard assessment;

29 CFR 1910.132(d)(1)(ii): Communicate selection decisions to each affected employee;

29 CFR 1910.132(d)(2): The employer shall verify that the required workplace hazard assessment has been performed through a written certification that identifies the workplace evaluated; the person certifying that the evaluation has been performed; the date(s) of the hazard assessment; and, which identifies the document as a certification of hazard assessment.

29 CFR 1910.134(c) (1): In any workplace where respirators are necessary to protect the health of the employee or whenever respirators are required by the employer, the employer shall establish and implement a written respiratory protection program with worksite-specific procedures... The employer shall include in the program the following provisions of this section, as applicable:

29 CFR 1910.134(c)(1)(i): Procedures for selecting respirators for use in the workplace;

29 CFR 1910.120(p)(8): Elements of an emergency response plan. The employer shall develop an emergency response plan for emergencies which shall address, as a minimum, the following areas to the extent that they are not addressed in any specific program required in this paragraph.

29 CFR 1910.120(p)(8)(ii)(K): PPE and emergency equipment (other items not included).

Discussion:

WRPS has developed risk assessment documents, as well as a respiratory protection plan and PPE plan. However, there are no defined action levels and selection criteria available for review for respiratory protective equipment, CPC, nor chemical protection of the eyes; and there is no element that addresses the selection process or protocol of use for an emergency response. In addition, there is an absence of service life criteria for CPC. The absence of a decision process or a documented, designated CPC material extends beyond the chemical oriented elements of the program and includes a deficiency in the Bloodborne Pathogen Exposure Control Plan. These items are of the most basic type of information to be made available to workers through the written safety and health program. A number of IH documents make reference to consulting the IH, deferring to the IH "professional judgment."

A-09-ESQ-TANKFARM-001-F03: There is a lack of specified criteria in the selection of direct reading air monitoring instrumentation and interpretation of results. There is an absence of specific methodology on the selection and interpretation of nine or more different DRI used to monitor for the acute hazard of COPC. Such DRI warrant both clear decision logic for selection and instructions of interpretation relative to other instrument readings. The results associated with the lack of written guidance and criteria was manifested in the WRPS response to the 222-S methylene chloride spill, in which the 10.6 ev Photoionoization

detector was used in error, as the basis for the release of the work area. The manufacturer's literature clearly identifies that this instrument does not detect a chemical such as methylene chloride, which has an ionization potential higher than 10.6 ev.

Requirement:

10 CFR 851.21, "Hazard Identification and Assessment"

(a) Contractors must establish procedures to identify existing and potential workplace hazards and assess the risk of associated workers injury and illness. Procedures must include methods to: Assess worker exposure to chemical, physical, biological, or safety workplace hazards through appropriate workplace monitoring;

Discussion:

Despite considerable attention to COPC, air monitoring strategies, and instrument operation, there is an absence of specific methodology for the selection and interpretation of the nine or more different DRI used to monitor for the acute hazard COPC (as listed in EH-06-004). Selection and data interpretation of some DRI such as the use of the iTX ammonia meter for ammonia measurement is self-evident. However, other DRI such as the ppbRAE, the Miran 205B, and the TVA-1000 respond to multiple chemicals at different sensitivities and react to multiple interfering compounds. Such DRI warrant both clear decision logic for selection and instructions of interpretation, relative to other instrument readings. In addition, there is no direction provided for the use of detector tubes with regard to the same. Such reliance on "Professional Judgment," at this significant level of decision making creates the potential for errors, departmental inconsistency, an absence of written documentation, and an inability to audit program performance against standardized procedures.

A-09-ESQ-TANKFARM-001-F04: There is an absence of written direction to incorporate the mandated goal of reducing worker exposure to carcinogens and all chemicals to levels ALARA, below the TLV.

Requirements:

10 CFR 851, 10 CFR 851.21, and 10 CFR 851.23 The 2005 ACGIH TLV booklet states "...carcinogens, worker exposure by all routes should be carefully controlled to levels as low as possible, below the TLV"

10 CFR 851.21(4), "Hazard Identification and Abatement," that the "contractor must analyze designs of new facilities and modifications to existing facilities and equipment for potential workplace hazards" and 10 CFR 851.22, "Hazard Prevention and Abatement," contractors must establish and implement a hazard prevention and abatement to ensure...

DOE Standard 1189-2008, "Integration of Safety into the Design Process" – Section 7.10, "Hazardous Material," similar to radiological hazards, DOE requirements invoke an ALARA concept for the protection of workers from hazardous materials. Design should support the

primary objective of reducing the frequency, severity, and cost of incidents involving hazardous material, as well as the cost of hazardous operations. Prevention practices, such as substitution of less hazardous materials in a project or design of a process to reduce generations of hazardous waste, should be examined prior to consideration of protection strategies. Protection strategies will generally involve confinement strategies, such a gloveboxes, piped systems, and tanks, as well as administrative controls. The approach will typically be driven by the magnitude of the hazard and inventory. Similar to radiological hazards, DOE requirements invoke an ALARA concept for the protection of workers from hazardous materials.

DOE-STD-3009-94, "Preparation Guide for U.S. Department of Energy Non-Reactor Nuclear Facility Documented Safety Analyses," Chapter 8, "Hazardous Material Protection"

8.4 ALARA POLICY AND PROGRAM (DOE-3009-94)

This section summarizes the ALARA policy and program for the facility. Historically, hazardous materials, unlike radioactive materials, have often been evaluated assuming de-minimis level below which little harm is associated with exposures (e.g., OSHA PELs). Where this is the case for given subject matter, ALARA needs to be considered a qualitative concept evaluated against OSHA and IH exposure standards and guidelines.

8.4 ALARA POLICY AND PROGRAM (TF DSA)

The hazardous material protection program ensures that exposures to hazardous materials are below regulatory limits and at a level ALARA. ALARA concepts are employed at the tank farms for hazardous material protection. The goal of ALARA is to reduce the level of hazardous materials and the effects of those materials at the source, and thereby mitigate any effects on workers, the environment, or the public. ALARA also ensures that exposures are kept to the lowest levels and within the limits set by governing authorities (i.e., OSHA PELs, ACGIH TLVs, and DOE directives). Procedures, instructions, and standards ensure exposures are kept to a minimum based on the requirements and provisions of DOE Orders, OSHA regulations, national consensus IH standards, and recommended practices. The IH programs pertaining to hazardous material protection at the Tank Farm Contractor (TFC) facilities utilize elimination/substitution of materials, engineered controls and features, administrative controls, and PPE.

To minimize the use of, and exposure to, hazardous materials, purchase requisitions are reviewed for products that contain or that may result in the production of hazardous chemicals; where possible, less hazardous materials are substituted. In addition, the TFC oversees contractor and subcontractor construction activities at TFC facilities to minimize exposures to hazardous materials through worksite inspections following the requirements of DOE O 440.1A.

5.2 Observations

A-09-ESQ-TANKFARM-001-O01: There is a lack of clear, consolidated information the WRPS IH technical basis is overly complicated and confusing to both workers and outside viewers. There are a number of significant conflicting statements regarding such important elements as PPE and air monitoring requirements. In addition, there are numerous links within key documents that refer the reader to a secondary set of documents, which in turn refer the reader to a tertiary set of documents.

Discussion:

The WRPS IH Technical Basis is overly complicated and confusing to both workers and outside viewers. There are a number of significant conflicting statements regarding such important elements as PPE and air monitoring requirements. In addition, there are numerous links within key documents that refer the reader to a secondary set of documents, which in turn refer the reader to a tertiary set of documents. Another concern is the listing of extensive readings for the implementation of a single IH task of noise dosimetry (TF-OPS-IHT-0015), which states "the following documents may be needed to perform this procedure" then lists 16 major documents, including TLV books, CFR, American National Standards Institute (ANSI) docs, and others.

Assessment Follow-up Items

A-09-ESQ-TANKFARM-001-AFI01: There is a WRPS IH consensus that the tank farms vapor hazards is static and fully characterized, which results in a WRPS IH Departmental mentality that limits vigilant assessment of day-to-day considerations of abnormal events, assessment of new or improved control measures; and interpretation of results. In follow up assessment (Phase II), the following subject areas will be looked at: The nature of the safety culture within WRPS, observations of IH Technicians going through re-qualification or initial qualification, actual sampling (source, personnel, or area), the processing of sample media for laboratory analysis and execution of the Work Instructions/Job Hazard Analysis, field observations of drills for off-normal waste release (and actual should any occur), the monitoring, controls, and associated documentation of abnormal event decision making, and effectiveness of in field sample and data quality assurance process.

6.0 REFERENCES (From DOE Standard IH Practices, DOE-STD-6005-2001 April 2001)

6.1 Government Documents

DOE Directives (Policy, Orders, Handbooks, and Technical Standards)

a. CFR 1910 Part 851 Replacing DOE O 440.1A, Worker Protection Management for DOE Federal and Contractor Employees.

b. DOE O 450.4. Safety Management System Policy.

c. DOE O 450.5. Line Environment, Safety, and Health Oversight.

d. DOE G 440.1-1, Worker Protection Management for DOE Federal and Contractor Employees Guide for Use with DOE O 440.1.

e. DOE G 440.1-2, Construction Safety Management Guide for Use with DOE O 440.1.

f. DOE G 440.1-3, Occupational Exposure Assessment, Implementation Guide for Use with DOE O 440.1.

g. DOE G 440.1-4, Contractor Occupational Medical Program Guide for Use with DOE O 440.1.

h. DOE G 440.1-7, Implementation Guide for Use with DOE N 440.1-7, Interim Chronic Beryllium Disease Prevention Program.

i. DOE Standard 1189-2008, "Integration of Safety into the Design Process."

j. DOE Standard 3009, Preparation Guide for U.S. Department of Energy Non-Reactor Nuclear Facility Documented Safety Analyses

k. GUIDES: DOE G 441.1-2 Occupational ALARA Program Guide

DOE-STD-6005-2001 2 i. DOE O 5480.10A, Contractor IH Program.

- **Other Government Documents**

a. U.S. Department of Labor, OSHA, "Field Inspection Reference Manual."

b. U.S. Department of Labor, OSHA, "Technical Manual."

c. U.S. Department of Labor, OSHA, Title 29 CFR, Part 1910, Occupational Safety and Health Standards, and Part 1926, Safety and Health Regulations for Construction.

d. U.S. Department of Labor, OSHA, Title 29 CFR, Part 1960, Basic Program Elements for Federal Employee Occupational Safety and Health Programs and Related Matters.

6.2 Non-Government Documents

a. ACGIH, "Threshold Limit Values for Chemical Substances and Physical Agents and Biological Exposure Indices" (Latest edition).

b. American Conference of Governmental Industrial Hygienists, "Industrial Ventilation: A Manual of Recommended Practice" (Latest edition).

c. Joseph Damiano and John R. Mulhausen (Editors), "A Strategy for Assessing and Managing Occupational Exposures," 2nd edition. AIHA, Fairfax, VA (1998)

d. Salvatore R. DiNardi, (Editor), "The Occupational Environment. Its Evaluation and Control," AIHA, Fairfax, VA (1997)

e. ANSI, latest version of various standards including, but not limited to:
   1. ANSI Z 88.2, .Respiratory Protection.
   2. ANSI Z 88.6, .Physical Qualifications for Respirator Use.
   3. ANSI Z 117.1, .Safety Requirements for Working in Tanks and Other Confined Spaces.
   4. ANSI Z 136.1, .Safe Use of Lasers.
   5. ANSI Z 358.1, .Emergency Eyewash and Shower Equipment.

f. American Society of Heating, Refrigerating, and Air Conditioning Engineers, "ASHRAE Handbook and Product Directory," volume on Fundamentals.

6.3 Personnel Interviewed

6.3.1 WRPS ESH&Q Safety and Health Manager

6.3.2 WRPS ESH&Q Business Operations Industrial Safety/IH Manager

6.3.3 WRPS ESH&Q Business Operations IH Manager

6.3.4 WRPS SST Retrieval & Closure Safety and IH Manager

6.3.5 WRPS Industrial Hygienists (7 total)

6.3.6 WRPS Industrial Hygiene Technicians (20 total)

6.4 Documents Reviewed

6.4.1 Integrated Environment, Safety, and Health Management System Description for the Tank Operations Contractor, RPP–MP-03

6.4.2 Worker Health and Safety Requirements Implementation Matrix, TFC-ESHQ-S SAF-CD-11

6.4.3 Worker Health and Safety Program, TFC-PLN-47, RPP-27195

6.4.4 Industrial Hygiene Safety Management Program Plan TFC-PLN-55

6.4.5 Tank Operations Contractor Health and Safety Plan TFC-PLN-43, Revision A-12

6.4.6 IH Exposure Assessment Strategy RPP-27195 TFC-PLN-34 R-D-2

6.4.7 Beryllium TFC-PLN 24

6.4.8 ASBESTOS PROGRAM, RPP-MP-625, Revision

6.4.9 Risk Management Plan TFC-PLN-39 Revision C

6.4.10 Emergency Management Program Plan TF-PLN-85

6.4.11 Tank Farm Contractor Training and Qualification Plan TFC-PLN-64

6.4.12 Technical Staff Qualifications Requirements USQ-GCX-2

6.4.13 IH Tech and Qualifications Requirements TFC-BSM-TQ STD-07 RC

6.4.14 Subcontractor Oversight ESH&Q TFC-ESHQ-S_SAF-C-07, Revision B-5

6.4.15 EMPLOYEE JOB TASK ANALYSIS TFC-ESHQ-S_IH-C-17, Revision B-3

6.4.16 IH Deports and Documents (Safety & Health Programs-web page) Dermal Exposure Study & Waste Disturbing Activities Vapor Characterization.

6.2.17 IH Reporting & Records Management TFC-ESHQ-S_IH-C-46

6.2.18 Managing Vapor Control Zones TFC-ESHQ-S_IH-C-48

6.2.19 Chemical Management Process TFC-ESHQ-S_IH-C-47

6.2.20 Industrial Hygiene Alarm Response TFC-ESHQ-S_IH-C-45

6.2.21 TF Chemical Exposure Hazard Analysis (Safety & Health Programs-web page)

6.2.22 Exposure Monitoring, Reporting, and Records Management TFC-ESHQ-IH-STD-03

6.2.23 Industrial Hygiene Response to Vapor Concerns TFC-ESHQ-IH-STD-09

6.2.24 Industrial Hygiene Equipment Management TFC ESQC_H- S PI 11

6.2.25 Industrial Hygiene Response to Employee Contact with Chemical Waste TFC-ESHQ-IH-STD-10

6.2.26 Industrial Hygiene Chemical Vapor Technical Basis RPP-22491, R1

6.2.27 Tank Waste Dermal Exposure Assessment RPP-34147, R O

6.2.28 Concentrations of Chemicals of Potential Concern in Water and Organic Condensates PRR-RPT-24794, R 1

6.2.29 Respirator Issuance and Control ProcessesTFC-ESHQ-S_IH-CD-05.1

6.2.30 Personal Protective Equipment TFC-ESHQ-S_IS-C-02

6.2.31 Blood borne Pathogen Exposure Control Standard TFC-ESHQ-S-24

6.2.32 INDUSTRIAL HYGIENE INSTRUMENT ALARM RESPONSE TFC-ESHQ-S_IH-C-45, Revision A-1

6.2.33 Response to Reported Odors or unexpected Changes to Vapor Conditions, TF Abnormal Operating Procedures:

6.2.34 Evaluation and Procurement of Industrial Hygiene Monitoring Instruments TFC-ESHQ-S_IH-CD-38

6.2.35 3M Breathe Easy Powered Air Purifying Respirator Test and Maintenance TFC-ESHQ-S_IH-D-05.2

6.2.36 MSA OptimAir 6A Powered Air Purifying Respirator Test and Maintenance TFC-ESHQ-S_IH-D-05.3

6.2.37 Using the TVA 1000B Toxic Vapor Analyzer TFC-ESHQ-S_IH-D-25

6.2.38 Tank Vapor Source Monitoring TFC-ESHQ-S_IH-D-27

6.2.39 Permit Required Confined Space TFC-ESHQ-S_IH-C-04, Revision C-2

6.2.40 MIRAN 205B Series SapphIRe Instrument OperationTFC-ESHQ-S_IH-D-32

6.2.41 Noise Surveys, Dosimetry, and Octave Band AnalysisTFC-ESHQ-S_IH-D-34

6.2.42 Hazard CommunicationTFC-ESHQ-S_IH-C-02

6.2.43 COC and Submitting Samples for Laboratory Analysis TFC-ESHQ-S_IH-P-10

6.2.44 Ergonomics TFC-ESHQ-S_IH-STD-03

6.2.45 Cold Stress TFC-ESHQ-IH-STD-01

6.2.46 Heat Stress Control TFC-ESHQ S IH C -07

6.2.47 Laser Safety and Nonionizing Radiation TFC-ESHQ-IH-STD-02

6.2.48 Asbestos Control - Facility Management/General Industry TFC-ESHQ-IH-STD-04

6.2.49 Hearing Conservation Program TFC-ESHQ-IH-STD-06

6.2.50 Lead Control Program TFC-ESHQ-IH-STD-08

6.2.51 Carcinogen Control TFC-ESHQ-IH-STD-11

6.2.52 Industrial Hygiene Monitoring and Control Strategies During Tank Retrieval and Transfers TFC-ESHQ-IH-STD-12

6.2.53 Illumination TFC-ESHQ-IH-STD-13

6.2.54 IHT Flammable Gas Surveillance on Double Shell Tanks TF-OPS-IHT-00

6.2.55 Perform IHT Flammable Gas Surveillance on Single Shell Tanks TF-OPS-IHT-002

6.2.56 Preparation and Field Use of Multi-Gas Monitor Model TMX412 TF-OPS-IHT-003

6.2.57 Preparation and Field Use of iTX Multi-Gas Monitor and iSP Motorized Sampling Pump TF-OPS-IHT-004

6.2.58 Preparation and Field Use of the ppbRAE Volatile Organic Compound Monitor TF-OPS-IHT-005

6.2.59 Preparation and Field Use of Drager Accuro and Accuro 2000 Pump and Colorimetric Indicator TF-OPS-IHT-006

6.2.60 Using DRIs TF-OPS-IHT-007

6.2.61 Using The Sper Scientific Light Meter TF-OPS-IHT-008

6.2.62 IH Pump Preparation and field Use for Personal-Area Air Monitoring TF-OPS-IHT-009

6.2.63 Field Wipe Sampling and Bulk Sampling Methods TF-OPS-IHT-0010

6.2.64 Preparation and Field Use of the AreaRAE Multi-Gas Monitor TF-OPS-IHT-0011

6.2.65 Preparation and Field Use of the QUESTemp 15 and QUESTemp 32 Heat Stress Monitors TF-OPS-IHT-0012

6.2.66 Preparation and Field Use of the Lumex Ra-915+ Mercury Vapor Analyzer TF-OPS-IHT-0014

6.2.67 Preparation and Field Use of the Quest Q300 Noise Dosimeter and 2900 Sound Level Meter TF-OPS-IHT-0015

6.2.68 Preparation and Field Use of the Manning EC-P2 Ammonia Monitor TF-OPS-IHT-0016

6.2.69 Performance Indicators (H&S Web)

6.2.70 IH Exposure Assessment strategy TFC PLN-34, Revision D-2, Section 3.4

6.2.71 WRPS Health and Safety Tool Box Web Page: multiple fact sheets, data sheets, information sheets, analysis and reports.

APPENDIX A – PRINCIPAL DOCUMENT REVIEW AND COMMENTS

Document Name	Document Identifier	Comments
PRIMARY DOCUMENTS		
Integrated Environment, Safety, and Health Management System Description for the Tank Operations Contractor	RPP –MP-03	Baseline ISM
Worker Health and Safety Requirements Implementation Matrix	TFC-ESHQ-S_SAF-CD-11	-Excellent tool.
Worker Health and Safety Program	TFC-PLN -47 RPP-27195	-Does not address New Technology Program -Organizational Roles and Responsibilities element is difficult to access -Medical Surveillance Program is vague
Industrial Hygiene Safety Management Program Plan	TFC-PLN-55	-Calls for a target of 3 IH field Inspections per week -No new technology review process -No element of metrics or corrective action elements
Chemical Hygiene Plan		To be addresses as part of the ATL assessment
Tank Operations Contractor Health and Safety Plan	TFC-PLN-43, REV A-12	-Scope is to be "compliant with 29 CFR 1910.120" -Scope includes (…"facility workers protected from unplanned releases of radioactive and hazardous materials)" -Unsuccessful in accessing WRPS Org Chart via cited web link -Does not address New Technology Program -Document contains cited links and over 200 secondary links contained in those documents - 4.2.1 No discussion of administrative controls -4.6 BBP program is non compliant (see that line item) -6.0 Contamination Control is radiation oriented no direction on chemical decontamination? - Medical surveillance does not address IH interactions with Medical contractor following uncontrolled exposures (EJTA is primary tool for ongoing surveillance).
IH Exposure Assessment Strategy	RPP-27195 TFC-PLN-34 R D-2	Lacks specific methodologies and decision making for use of DRIs, despite general directives provided.
Beryllium	TFC-PLN 24	Previously approved.
ASBESTOS PROGRAM	**RPP-MP-625, REV**	Effective.
Risk Management Plan	**TFC-PLN-39, REV C December 3, 2008**	-No discussion of Engineering control assessments, administrative control efficiency, PPE usage impacts, review of new technologies or future assessment strategies.
Emergency Management Program Plan	TF-PLN-85	Does not address all 29 CFR 1910.120 line items
Staff Qualifications		
Tank Farm Contractor Training and Qualification Plan	TFC-PLN-64	Applicable to all TOC personnel, General in nature
Technical Staff Qualifications Requirements	USQ-GCX-2	IH quals well addressed.
IH Tech Training and Qual Requirements	TFC-BSM-TQ STD-07 R C	-Calls for 2 yr degree + 1 yr experience & Basic in-house IH course, -Does not discuss IHT –Lead Quals -Does not address IH Equipment Custodian Quals
Subcontractor Oversight	**ESH&Q□TFC-ESHQ-S_SAF-C-07, REV B-5□**	**It is unclear as to who will provide the IH support, There are no minimal quals stated for H&S subs**
EMPLOYEE JOB TASK ANALYSIS	**TFC-ESHQ-S_IH-C-17, REV B-3**	**This is the key link in the Medical Surveillance Program within the TOC HASP. Does not address overexposure medical surveillance issues.**
IH Management Elements		
IH Deports and Documents	**Safety & Health**	Excellent resource

- **Dermal Exposure Study** - Waste Disturbing Activities Vapor Characterization.	**Programs-web page**	**- Dermal Exposure Study** - **Dedicated to demonstrating that Silver shield CPC is not warranted for listed TF work.** -Waste Disturbing Activities Vapor Characterization Report
IH Reporting & Records Management	**TFC-ESHQ-S_IH-C-46**	Overall, good document
Managing Vapor Control Zones	**TFC-ESHQ-S_IH-C-48**	Appears to be a very good tool, ties to the TVIS and the CHAD s.
Chemical Management Process	**TFC-ESHQ-S_IH-C-47**	- Not Hazwaste related
Industrial Hygiene Alarm Response	**TFC-ESHQ-S_IH-C-45**	IHT or IH: "Evaluate the cause and determine the need for additional actions" – no decision tree or directives for stop work, etc.
TF Chemical Exposure Hazard Analysis	**Safety & Health Programs-web page**	-Overall, very good risk characterization summaries in similar format for multiple tanks and operations. Use of comparable operations is useful. *T Farm breather filter change out: No need for a vapor control zone and monitoring is limited to ammonia and VOCs: However, WRPS has 1) Provided a list of chemicals in condensate (Hg, nitrosamines, etc) & 2) Stated that filters trap semi vols ?
Exposure Monitoring, Reporting, and Records Management	**TFC-ESHQ-IH-STD-03**	Exceeds OSHA retention of exposure records (75 yrs)
Industrial Hygiene Response to Vapor Concerns	**TFC-ESHQ-IH-STD-09**	Very good overall approach, but cited instruments and techniques are limited in scope?
Industrial Hygiene Equipment Management	**TFC ESQC _H- S PI 11**	Good Directive.
Industrial Hygiene Response to Employee Contact with Chemical Waste	**TFC-ESHQ-IH-STD-10**	"All hazard and facility/area information will be provided to the Occupational Medicine Contractor and the shift manager". What, where, How and when?
Technical Documents		
Industrial Hygiene Chemical Vapor Technical Basis	**RPP-22491, R1**	-Excellent effort, subject to some change per WRPS and HC interactions
Tank Waste Dermal Exposure Assessment	**RPP-34147 Revision 0**	- Excellent Element of Tech Basis- Advance level work -liquid has a pH of 13, yet document only calls for safety glasses, as does the PPE plan below. -Conclusion is unclear with respect to CPC requirements.
Concentrations of Chemicals of Potential Concern in Water and Organic Condensates	**PRR-RPT-24794, R 1**	-Excellent Study and characterization
Respirator Issuance and Control Processes	**TFC-ESHQ-S_IH-CD-05.1**	Effective.
Personal Protective Equipment	**TFC-ESHQ-S_IS-C-02**	-lacks discussion of decision logic for CPC selection &, service life -Indicates that corrosive materials are cause for protection, but the text only addresses impact protection, not splash protection?
Blood borne Pathogen Exposure Control Standard	**TFC-ESHQ-S-24**	- does not define type of Gloves -Refers only to "masks" as respiratory protective equipment
INDUSTRIAL HYGIENE INSTRUMENT ALARM RESPONSE	**TFC-ESHQ-S_IH-C-45, REV A-1**	IHT or IH: "Evaluate the cause and determine the need for additional actions".
Response to Reported Odors or unexpected Changes to Vapor Conditions	**TF Abnormal Operating Procedures:**	IH to collect grab sample for GC/MS Real time monitoring is VOC and ammonia
Evaluation and Procurement of Industrial Hygiene Monitoring Instruments	**TFC-ESHQ-S_IH-CD-38**	- No discussion of new technology reviews, but very good element of such a process.
3M Breathe Easy Powered Air	**TFC-ESHQ-S_IH-D-**	Effective.

Purifying Respirator Test and Maintenance	**05.2**	
MSA OptimAir 6A Powered Air Purifying Respirator Test and Maintenance	**TFC-ESHQ-S_IH-D-05.3**	Effective.
Using the TVA 1000B Toxic Vapor Analyzer	**TFC-ESHQ-S_IH-D-25**	-No discussion of COPC that are detected by PID/FID or sensitivity/ correction factors
Tank Vapor Source Monitoring	**TFC-ESHQ-S_IH-D-27**	Very general, no techniques described.
Permit Required Confined Space	**TFC-ESHQ-S_IH-C-04, REV C-2**	N o comments.
MIRAN 205B Series SapphIRe Instrument Operation	**TFC-ESHQ-S_IH-D-32**	Very good. Note format varies with different instruments.
Noise Surveys, Dosimetry, and Octave Band Analysis	**TFC-ESHQ-S_IH-D-34**	Excellent.
Hazard Communication	**TFC-ESHQ-S_IH-C-02**	Unclear as to what hazard index is used for labeling; HMIS?
Chain of Custody and Submitting Samples for Laboratory Analysis	**TFC-ESHQ-S_IH-P-10**	Good.
Ergonomics	**TFC-ESHQ-S_IH-STD-03**	Sound. Cites TLV Booklet for primary direction. See Also: **TANK FARMS GENERAL INDUSTRIAL SAFETY HAZARDS ANALYSIS** **See Also Ergonomics H&S web page**
Cold Stress	**TFC-ESHQ-IH-STD-01**	Effective.
Heat Stress Control	**TFC-ESHQ S IH C -07**	Good, comprehensive.
Laser Safety and Nonionizing Radiation	**TFC-ESHQ-IH-STD-02**	No comment.
Asbestos Control - Facility Management/General Industry	**TFC-ESHQ-IH-STD-04**	29 CFR 1910.1001(l), *Medical Surveillance* requires a specific pre-placement examination before an employee can be designated as an asbestos worker but TFC-ESHQ-IH-STD-04, *Asbestos Control – Facility Management/General Industry* does not document how these pre-placement requirements are transmitted to the occupational medical office or verified to have been met before placement.
Asbestos Control - Construction Industry	**TFC-ESHQ-IH-STD-05**	No comments
Hearing Conservation Program	**TFC-ESHQ-IH-STD-06**	29 CFR 1910.95(g)(10) defines a standard threshold shift as a change in hearing threshold relative to the baseline audiogram of an average of 10 dB or more at 2000, 3000, and 4000 Hz or greater in either ear. Contrary to this TFC-ESHQ-IH-STD-06, *Hearing Conservation Program*, Revision A, Dated October 28, 2004 list the determining standard threshold shift that is an average of 25 dB or greater at 2000, 3000, and 4000 Hz in either or both ears for written notification to an employee.
Lead Control Program	**TFC-ESHQ-IH-STD-08**	29 CFR 1910.1025(e)(4), *Mechanical Ventilation* requires effectiveness check of at least every three months and within five days of any change that may result in a change in employee exposure to lead. Contrary to this TFC-ESHQ-IH-STD-08, *Lead Control Program* (section 3.3.3, *Mechanical Ventilation*) omits the effectiveness check requirement.
Carcinogen Control	**TFC-ESHQ-IH-STD-11**	29 CFR 1910.1003 (c)(2)(ii) requires for the listed carcinogens within a regulated area, authorized employees upon exit wash the hands, forearms, face, and neck upon each exit. Contrary to this TFC-ESHQ-IH-STD-11, *Carcinogen Control* (Step 10) only identifies the action of washing but is non-specific on body section or upon each exit of the regulated area. 29 CFR 1910.1003(e)(1)(ii)requires a specific sign at entrances to regulated areas containing operations covered by paragraph (c)(5). Contrary to this TFC-ESHQ-IH-STD-11, *Carcinogen Control* (Step 8) does provide the specific signage as the referenced section requires.
Industrial Hygiene Monitoring and Control Strategies During Tank Retrieval and Transfers	**TFC-ESHQ-IH-STD-12**	Requires updating: This February, 2005 document discusses pending, future policies not yet addressed.
Illumination	**TFC-ESHQ-IH-STD-13**	-consistent with 29 CFR 1910.120 M (illumination)
IHT Flammable Gas Surveillance on	**TF-OPS-IHT-001**	-Good record keeping tools, no mention of calibration or correction factors if warranted.

Double Shell Tanks		
Perform IHT Flammable Gas Surveillance on Single Shell Tanks	**TF-OPS-IHT-002**	-Good record keeping tools, no mention of calibration or correction factors if warranted.
Preparation and Field Use of Multi-Gas Monitor Model TMX412	**TF-OPS-IHT-003**	Excellent. Note: No discussion of LEL corrections.
Preparation and Field Use of iTX Multi-Gas Monitor and iSP Motorized Sampling Pump	**TF-OPS-IHT-004**	Effective.
Preparation and Field Use of the ppbRAE Volatile Organic Compound Monitor	**TF-OPS-IHT-005**	Very Good (=/- 10% of bump gas acceptable) No discussion of PID lamp or range, sensitivities or applications.
Preparation and Field Use of Drager Accuro and Accuro 2000 Pump and Colorimetric Indicator	**TF-OPS-IHT-006**	Excellent. Do not understand pump application in text?
Using Direct Reading Instruments	**TF-OPS-IHT-007**	-Overall, good document. - No discussion of COPC that are detected by PID/FID or sensitivity/ correction factors
Using The Sper Scientific Light Meter	**TF-OPS-IHT-008**	Good.
Industrial Hygiene Pump Preparation and field Use for Personal-Area Air Monitoring	**TF-OPS-IHT-009**	Effective.
Field Wipe Sampling and Bulk Sampling Methods	**TF-OPS-IHT-0010**	Effective.
Preparation and Field Use of the AreaRAE Multi-Gas Monitor	**TF-OPS-IHT-0011**	Effective. Good detail.
Preparation and Field Use of the QUESTemp 15 and QUESTemp 32 Heat Stress Monitors	**TF-OPS-IHT-0012**	Effective.
Preparation and Field Use of the Lumex Ra-915+ Mercury Vapor Analyzer	**TF-OPS-IHT-0014**	Effective. Mode of technology absent.
Preparation and Field Use of the Quest Q300 Noise Dosimeter and 2900 Sound Level Meter	**TF-OPS-IHT-0015**	This procedure states the "the following documents may be need to perform this procedure" then lists 16 major documents, including TLV books, CFRs, ANSI docs, etc . This is an unrealistic burden to place on IHTs!
Preparation and Field Use of the Manning EC-P2 Ammonia Monitor	**TF-OPS-IHT-0016**	Unclear as to how an IHT's calibration (if necessary) is accounted for on sticker and records?
Metrics		-
Performance Indicators	**H&S Web**	Good metrics, but limited to subject matter - Lab turn around data - Tracking of # of samples
Industrial hygiene Exposure Assessment Strategy	**TFC-PLN-34, REV D-2 Section 3.4**	-Discusses SEGs -number of exposures below 10% of OELs -Number of exposures greater then 50% of the OEL -Recommendations for SEG revisions or EAS improvements
Tertiary Documents		

Procedural Items	LCO 3.2.3 SST 241-B-203/B-204 Passive Ventilation Sys **Tank Farm DSA Requirements Implementation Matrix** **AC 5.8 Emergency Preparedness** **AC 5.10 Flammable Gas Control** **LCOS: ventilation, Flammable Gas Concentrations**	No Comments
MSDS	**Safety & Health Programs-web page**	Appears to be a sound system of electronic MSDS access.
TANK VAPOR INFORMATION SHEETs	**Safety & Health Programs-web page**	- Dermal Protection outlines those tanks that do not call for silver shield. This does not clarify what CPC, if any, is warranted, nor does it address corrosive element. - Monitoring for COPC's (Chemicals of Potential Concern) Good element to the Exposure Assessment Strategy, as applied to A tank farm only. However, narrative states: " Direct reading instruments (DRI) are used to monitor for COPC that may cause immediate acute effects, such as irritation." However, the list of 8 chemicals that are monitored by DRIs does not include some other COPCs that appear to offer acute effects such as furan? - Health Effects of Chemicals of Potential Concern – good Hazard Communication tool for hazwaste consitutents. - Odor Thresholds – good reference.

U.S. Department of Energy
[redacted]
P.O. Box 450, MSIN H6-60
Richland, Washington 99352

JAN 12 2009

08-ESQ-335

Mr. Mike Armstead
Procurement Contracts Manager
Washington River Protection Solutions LLC
2440 Stevens Center Place
Richland, Washington 99354

Dear Mr. Armstead:

CONTRACT NO. DE-AC27-08RV14800 – NOTIFICATION OF INDUSTRIAL HYGIENE TECHNICAL BASIS ASSESSMENT

The U.S. Department of Energy, Office of River Protection (ORP) will conduct an assessment of the Washington River Protection Solutions LLC industrial hygiene technical basis during the month of January 2009. The lead for this assessment is Richard L. Urie and supported by Mario R. Moreno. An assessment review plan is attached.

If you have any questions, please contact me, or your staff may contact Richard L. Urie, Office of Environmental Safety and Quality, (509) 376-2229.

Sincerely,

Joseph C. Poniatowski
Contracting Officer

ESQ:RLU

Attachment

cc w/attach:
F. Beranek, WRPS
M. W. Jones, WRPS
D. T. Tuckness, WRPS
WRPS Correspondence

Attachment
08-ESQ-335

JAN 1 2 2009

U.S. Department of Energy

Office of River Protection

Industrial Hygiene Technical Basis Assessment

of

Washington River Protection Solutions

Industrial Hygiene Technical Basis Assessment
A-09-ESQ-TANKFARM -001

PURPOSE:

U.S. Department of Energy (DOE), Office of River Protection (ORP) will conduct an assessment of the contractor's Industrial Hygiene (IH) technical basis programmatic documents, staff qualifications, and internal means of management, which provide guidance of work implementation at the Washington River Protection Solutions LLC (WRPS) operated facilities. This assessment fulfills a scheduled assessment that is identified in the ORP Fiscal Year 2009 Integrated Assessment Schedule. The assessment will conform to the requirements of ORP procedure ESQ-IP-1, RO.

INDUSTRIAL HYGIENE SCOPE:

The scope of this assessment shall be limited to the following basic tasks:

I. A review and assessment of all WRPS programmatic IH related documents, as defined in this section;

II. An evaluation of the IH personnel qualifications by way of a review of staff qualifications cards and through small group interviews; and

III. A review of WRPS IH management records, data bases and reports that reflect the current level of effort associated with IH treads analysis, program metrics, program planning, self-assessments, and associated corrective actions.

The assessment plan was developed using DOE G 440.1-3, titled Occupational Exposure Assessment. DOE G 440.1-3 provided the Criteria, Review, and Approach Documents (CRAD)/Lines of Inquiry which are listed below. The assessor modified the CRADs/Lines of Inquiry to be more specific as it relates to WRPS. The assessor will use a combination of conventional review techniques during the course of the assessment, including document reviews, personnel interviews, and field observations.

For the purpose of this assessment and to assure a common understanding, an IH program is considered to consist of the following technical and programmatic sub-elements:

1. Hazard communication & related training;

2. Chemical exposure monitoring, modeling, and related health risk assessments;
   a. Inclusive of air & surface sources, instrumentation, and techniques in consideration of eye/dermal exposures, injection, inhalation and ingestion

3. Toxicology and chemical hazard assessments;
   a. Inclusive of medical surveillance, and consideration of health effects such as cancer, birth defects, chemical sensitivity, target organ effects; explosive,& reactive chemical hazards

4. Implementation and testing of control strategies for IH Hazards;
   a. Inclusive of demonstrated consideration of engineering controls, including ventilation and shielding; administrative controls including product or process substitution; ongoing reviews of emerging technologies

5. Ergonomics and illumination;

6. Identification, assessment, and control of physical work environment factors;
   a. Inclusive of heat and cold, high and low pressure environments, and shift work

7. Selection and use of Personal Protective Equipment, with an emphasis on eye, face, skin, and respiratory protection;

8. Energy and electromagnetic radiation;
   a. Inclusive of the Identification, assessment and control of noise, non-ionizing radiation, and laser safety

9. Biological hazards assessment within the work place;
   a. Inclusive of pathogenic agents, poisonous organisms, and allergens

10. Functional IH Management elements, including:
    a. Staff Training and Qualifications programs
    b. Trends analysis, Metrics, tracking, self-assessments and reporting
    c. Lessons learned, corrective actions and improvements
    d. Employee interactions and informational exchange
    e. Planning, budgeting, and continuing education

11. Integration of the afore mentioned IH elements into applied operations including:
    a. Hazardous Waste Operations
    b. Confined Space Entry
    c. Laboratory Chemical Hygiene Plans
    d. Chemical spill response activities
    e. Beryllium, lead, carcinogen and asbestos management programs

CRITERIA

The CRAD is intended to provide guidance for evaluation of the occupational exposure assessment and health hazards management component of the DOE and WRPS IH program. The goal of the criteria is to answer the fundamental question:

"Is WRPS properly planning, and effectively managing an industrial hygiene, occupational exposure assessment, and hazards management program that meets the intent of 10 CFR 851?"

Enclosure 1 provides detailed questions that may be utilized as specific CRADs. Enclosure 2 provides a summary of the methodology to be employed, to assist WRPS in facilitation of the assessment process.

TEAM MEMBERS:

The assessment team will be lead by Richard L. Urie, with the support of Mario R. Moreno.

REQUIREMENTS:

- 10 Code of Federal Regulations (CFR) Part 851, Worker Safety and Health Program Rule;
- 10 CFR Part 850 Chronic Beryllium Disease Prevention Program; Final Rule (not applicable to this assessment);
- DOE G 440.1-3, Occupational Exposure Assessment;
- DOE O 226.1a, Contractor Assurance;
- OSHA Regulations Standards - 29 CFR 1910 and 1960;
  - 29 CFR 1910, with emphasis on –
    - General Duty Clause
    - 29 CFR 1910.120 Hazardous Waste Operations
    - 29 CFR 1910.132, Personal Protective Equipment
    - 29 CFR 1910.134, Respiratory Protection
    - 29 CFR 191 0. 94, 95 & 97 Ventilation, noise, & Non ionizing Radiation
    - 29 CFR 146 Confined Space Entry
    - 29 CFR 1910.141 Sanitation
- DOE Environmental Safety and Health (ES&H) Reporting Order 231.1; and Computerized Accident/Incident Reporting System;
- DOE O 231.1A, ES&H Reporting;
- Work Authorization System Order; DOE O 412.1A;
- ES&H Goals Policy; DOE P 450.7
- Safety Management Functions, Responsibilities, and Authorities Policy; DOE P 411.1
- Quality Assurance Order; DOE O 414.1C;

- DOE Notice 450.14, Safe Handling, Transfer, and Receipt of Biological Etiologic Agents at Department of Energy Facilities;
- DOE P 456.1, Secretarial Policy Statement on Nanoscale Safety;
- DOE Order 5480.19, Conduct of Operations Requirements for DOE Facilities;
- DOE Order 5480.20A, Personnel Selection, Qualification, and Training. Requirements for DOE Nuclear Facilities; and
- DOE O 225.1A, Accident Investigations.

1/8/09

Richard L. Urie, Team Lead, January 7, 2009

ENCLOSURE 1

PERFORMANCE OBJECTIVES

Performance Objective 1: Washington River Protection Solutions LLC (WRPS) Program Documentation

Criteria to be evaluated:

1. Has the WRPS Safety and Health Organization documented the Industrial Hygiene (IH); occupational exposure and health hazards management programs in a manner which is comprehensive and compliant with 10 Code of Federal Regulations (CFR) 1910.851, 10 CFR 850 and 851, other U.S. Department of Energy (DOE) Directives and recognized consensus standards (e.g., the American Industrial Hygiene Association [AIHA], National Institute of Occupational Safety and Health [NIOSH]). Has the WRPS IH program defined the technical areas and the frequency at which each technical area is assessed? For each technical area, are there procedures for performing the health hazard assessment which defines the purpose, scope, responsibilities, assessment criteria, and references? Does the assessment documentation include: occupational exposure assessment and sampling methodology, laboratory analysis method used, report findings, causal analyses, corrective actions, review, and distribution of report?

2. Has WRPS documented a clear definition of responsibility for decisions by senior management, provision for escalation of worker health matters involving significant occupational exposures and hazards to DOE in an appropriate time frame?

3. Does WRPS maintain a documented sitewide planning and budgeting process which includes priorities for managing occupational exposures and health hazards?

4. Does the WRPS Safety and Health Organization have documented implementation plans for the occupational exposure and health hazards management program?

5. Has WRPS established clear lines of authority and responsibility for managing the occupational exposure and health hazards program? Are responsibilities of each staff position defined for worker health activities? Internal and external interfaces within and between the DOE Office of River Protection, the WRPS, and with outside groups (i.e., State, local, and regional health officials and other government agencies), being clearly and formally defined for each position?

6. Has the WRPS Safety and Health Organization developed and maintained a written occupational exposure and health hazards management program in conformance to 10 CFR 850, and 10 CFR 851.

PERFORMANCE OBJECTIVES

Performance Objective 2: Operating Contractor's Program Implementation of Administrative Elements

Criteria to be evaluated:

1. Has WRPS fully integrated its IH; occupational exposure and health hazards management program into the work planning and execution process?

2. Does the contractor's Safety and Health organization prepare an annual assessment schedule showing the occupational exposure and health hazards assessments planned?

3. Does the contractor's Safety and Health organization submit to the DOE Office of River Protection (ORP), a list of the dates on which occupational exposure and health hazards technical assessments were preformed?

4. Do the WRPS audit management system tools include; procedures for performing occupational exposure and health hazards assessments, worksheets, periodic standard report formats, reference material, training material, which are provided to staff performing assessments?

5. Does the contractor's Safety and Health Organization has a system in place to control, maintain occupational exposures, health hazards management procedures and hazard control guides current? Does the system include a mechanism for updating and distributing procedures, and internal guides on a specified schedule?

6. Does WRPS Safety and Health Organization perform analyses on significant occupational exposures and health hazards assessment findings? Has the contractor identified staff that is responsible for correcting the contractor's health hazard deficiencies? Are the actions necessary to resolve the deficiency addressed in corrective action plans?

7. Does the contactor's Safety and Health organization perform trend analysis of findings from the occupational exposures and health hazards programs? Does the contractor communicate leading and lagging performance trends to ORP? Does the contractor have a technically defensible corrective action management program that will prevent reoccurrence of IH; occupational exposure and health hazards management program deficiencies?

8. Does the contractor's Safety and Health organization have a tracking system that includes all occupational exposures and health hazards finding? Does the tracking system identify corrective actions, schedules, and progress made on corrective actions? Is other information such as results of root cause analyses also included in the tracking system? Is there a method to flag or highlight significant events or actions is included in the tracking system?

9. Does the contractor's Safety and Health organization ensure that management processes, activity hazards identification and analysis, and functional technical appraisals in specific occupational exposure and health hazards assessment subject areas are included in the contractor's program and are integrated into the Contractor's safety management, work planning and execution system?

   Note: This might include: activity hazards analysis, exposure assessments, hazard controls and, the specific technical program elements (e.g., noise and hearing conservation, ventilation, respiratory protection, asbestos, non-ionizing radiation (radio-frequency radiation, lasers, magnetic fields), ergonomics, carcinogens, DOE Beryllium program, Occupational Safety and Health Administration (OSHA) substance specific health standards i.e., Benzene, Asbestos, etc; occupant emergency and critical event planning, sanitation, vibration, extreme temperature, biohazards, confined spaces, laboratory hygiene program, Indoor Air Quality, office environments, recordkeeping, employee training and certification, and labeling and posting).

10. Does the contractor's line management organization track the effectiveness of its implementation of the occupational exposure and health hazards program by reviewing the findings of its internal assessments of the program? Does the contractor's line management identify problems which are promptly corrected?

11. Does WRPS have an effective corrective action program and organizational structure for resolving related action items? Contractor performance with respect to completing corrective actions is documented, reported, and tracked?

12. Does the WRPS Safety and Health organization have adequate staff with a level of professional training, experience commensurate with the requirements for implementation of the IH; occupational exposures and health hazards management program?

13. Does the WRPS Safety and Health organization ensure that internal self-assessments of occupational exposure and health hazards are conducted?

14. WRPS Safety and Health Organization ensure compliance with mandatory standards for assessing and managing occupational exposures and health hazards.

15. Is the WRPS occupational exposure and health hazards assessment staff adequately trained in occupational exposure assessment, such as through an AIHA, or other academic based program? Does the training address familiarization with all mandatory standards, AIHA or NIOSH criteria, guidance documents, and other references that are pertinent to the technical area; use of procedures for conducting the assessment and, instructions on preparing reports and related documentation?

16. Does the WRPS Safety and Health Organization prepare performance indicator reports, utilize performance indicators involving occupational exposures, health hazards data, and other operations information? This includes; medical monitoring, epidemiological surveillances, Computerized Accident/Incident Reporting System, OSHA 300 log data,

Occurrence Reporting and Processing System reportable occurrences, for performing trending and analysis to provide early identification of potential exposure and health hazards and/or deteriorating/improving worker health conditions.

17. WRPS provides management periodic summaries of performance on the assessment and management of occupational exposures and health hazards.

18. Has WRPS developed program management goals related to occupational exposures and health hazard? Are these goals measurable and include short-term (annual) and long-term goals (several year period) to assess and manage occupational exposures and health hazards? Is the progress towards goals monitored regularly and goals adjusted as necessary? Do the line managers have performance elements in their personnel appraisal relating to successful attainment of program management goals?

ENCLOSURE 2

METHODOLOGY

The Industrial Hygiene (IH) technical basis assessment shall consist of the following elements:

1. An in-brief tentatively planned for the week of January 12, 2009, involving the Washington River Protection Solutions LLC (WRPS) health and Safety Manager and IH Manger; and the U.S. Department of Energy (DOE) assessment team. The purpose of the in-brief is to clarify the scope and the applicable Criteria Review and Approach Documents; and to discuss scheduling and logistical requirements of the assessment.

2. The DOE Office of River Protection (ORP) assessment team shall review all WRPS IH related programs, plans, procedures and related documents currently on record. This assessment will not necessarily include a detailed review of data bases, log books, and records, other than to verify the presence of such documents as warranted. The review process will entail a comparative analysis of WRPS programmatic documents to Federal requirements (please see requirements section below) and include a review such umbrellas programs as:

   - 851 requirements Matrix TFC-ESHQ-S_SAF-CD-11;
   - Worker Health and Safety Program, RPP-27195; and
   - Tank Operations Contractor Health and Safety Plan.

To include secondary and tertiary documents such as

- IH Chemical Vapor Technical Basis, RPP-22491, Revision 1;
- IH Exposure Assessment Strategy RPP-27195 TFC-PLN-34 R D-2; and
- IHT-007 Using Direct Reading Instruments.

3. The DOE ORP assessment team will meet with the appropriate WRPS management representatives to gain a clear understanding of WRPS IH program goals, objectives, metrics/ trends analysis, and internal assessment efforts and results. In addition, the team will review the communication process between the WRPS IH management team and the DOE ORP representatives with respect to on-going programmatic updates and special event notifications. The meeting(s) will also serve as an opportunity to clarify any questions regarding WRPS written programs and guidance documents.

4. The DOE ORP assessment team will coordinate with WRPS a series of interviews with equal grades of all WRPS IH personnel for the purpose of evaluating their level of knowledge and

training; and to gain first hand insight into their respective job duties and interactions relative to the programmatic directives.

5. The DOE ORP assessment team will conduct a Generator Assistance Program analysis based on the results of the assessment per a 10 CFR 851 itemized template.

6. Other elements as deemed necessary.

7. The DOE ORP assessment team will conduct a de-brief to discuss any draft observations or findings with WRPS managers of interest.

Task# ORP-ESQ-2008-0344

E-STARS[R] Report
Task Detail Report
01/12/2009 1013

TASK INFORMATION

Task#	ORP-ESQ-2008-0344		
Subject	CONCUR:08-ESQ-335; NOTIFICATION OF INDUSTRIAL HYGIENE TECHNICAL BASIS ASSESSMENT		
Parent Task#		**Status**	CLOSED 01/12/2009
Reference	08-ESQ-335	**Due**	
Originator	Gano, Becky	**Priority**	High
Originator Phone	(509) 376-6004	**Category**	None
Origination Date	12/30/2008 0835	**Generic1**	
Remote Task#		**Generic2**	
Deliverable	None	**Generic3**	
Class	Long Term	**View Permissions**	Normal

Instructions

Correspondence is being routed for concurrence via hard copy. Once you receive the correspondence, please approve or disapprove electronically via E-STARS and route to next person on the routing/concurrence list.

BCC:
ESQ OFF FILE
ESQ RDG FILE
J.C.PONIATOWSKI, AMD
W.J.TAYLOR, ESQ
K.A.HOAR, VCD
R.L.URIE, VCD

RECORD NOTE:

ROUTING LISTS

1	Route List	Inactive

- Urie, Richard L - Review - Cancelled - 01/12/2009 1013
  Instructions:
- Hoar, Kenneth A - Review - Concur - 01/12/2009 1003
  Instructions:
- Taylor, William J - Review - Concur - 01/12/2009 0734
  Instructions:
- Poniatowski, Joseph C - Approve - Approved - 01/12/2009 0936
  Instructions:

ATTACHMENTS

Attachments

1. 08-ESQ-335 att IH Technical Basis Assessment.doc
2. 08-ESQ-335 WRPS LTR Notification of Industrial Hygiene Technical Basis Assessment.doc

COLLABORATION

COMMENTS

Poster Gano, Becky - 01/12/2009 1001

CLOSED

RECEIVED
JAN 12 2009

Task# ORP-ESQ-2008-0344

E-STARS[R] Report
Task Detail Report
12/30/2008 0839

TASK INFORMATION

Task#	ORP-ESQ-2008-0344		
Subject	CONCUR:08-ESQ-335; NOTIFICATION OF INDUSTRIAL HYGIENE TECHNICAL BASIS ASSESSMENT		
Parent Task#		**Status**	Open
Reference	08-ESQ-335	**Due**	
Originator	Gano, Becky	**Priority**	High
Originator Phone	(509) 376-6004	**Category**	None
Origination Date	12/30/2008 0835	**Generic1**	
Remote Task#		**Generic2**	
Deliverable	None	**Generic3**	
Class	Long Term	**View Permissions**	Normal

Instructions

Correspondence is being routed for concurrence via hard copy. Once you receive the correspondence, please approve or disapprove electronically via E-STARS and route to next person on the routing/concurrence list.

BCC:
ESQ OFF FILE
ESQ RDG FILE
J.C.PONIATOWSKI, AMD
W.J.TAYLOR, ESQ
K.A.HOAR, VCD
R.L.URIE, VCD

RECORD NOTE:

ROUTING LISTS

1 Route List Active

- Urie, Richard L - Review - Awaiting Response - Due Date 1/8/09 RL
  Instructions:
- Hoar, Kenneth A - Review - Awaiting Response - Due Date 1/8/09
  Instructions:
- Taylor, William J - Review - Awaiting Response - Due Date 1/9/09
  Instructions:
- Poniatowski, Joseph C - Approve - Awaiting Response - Due Date 1/12/09
  Instructions:

ATTACHMENTS

Attachments

1. 08-ESQ-335 att IH Technical Basis Assessment.doc
2. 08-ESQ-335 WRPS LTR Notification of Industrial Hygiene Technical Basis Assessment.doc

COLLABORATION

COMMENTS

No Comments

TASK DUE DATE HISTORY

No Due Date History

SUB TASK HISTORY

No Subtasks

-- end of report --

APPENDIX C - INTERGRATED SAFETY MANAGEMENT SYSTEM EVALUATION FORM

ISMS Evaluation
ESQ-OA-IP-01-R1
Issued 01/21/09
Tank Operations Contractor
Industrial Hygiene Technical Basis Assessment

For each of the following identify whether the report:

S = Identified a strength

W = Identified a weakness

N = Found the topic with no special strength or weakness

N/A = Did not address the topic

Topical Area	Evaluation	Comment (optional)
Core Function 1: Define the Scope of Work	W	Field work OK, weak at program level
Core Function 2: Analysis of Hazards	N	
Core Function 3: Develop and Implement Hazard Controls	N	
Core Function 4: Perform Work Within Controls	N	
Core Function 5: Provide Feedback and Continuous Improvement	W	
Principle 1: Line Management Responsibility for Safety	W	
Principle 2: Clear Roles and Responsibilities	W	Including weak interfaces with Ops and Eng.
Principle 3: Competence Commensurate with Responsibilities	N	
Principle 4: Balanced Priorities	W	
Principle 5: Identification of Safety Standards and Requirements	W	
Principle 6: Hazard Controls Tailored to Work Performed	W	
Principle 7: Operations Authorization	N	
Supplemental Principle 1: Highly-Reliable Operational Performance	W	
Supplemental Principle 2: Individual Attitude and Responsibility	S	Current workforce usually performs work correctly in absence of program Procedures.
Supplemental Principle 3: Performance Assurance	W	
Supplemental Principle 4: Organizational Performance Improvement	W	

APPENDIX D – ASSESSMENT TEAM BIOGRAPHIES

Richard L. Urie, Team Lead

Mr. Urie is certified in Industrial Hygiene (IH) by the American Board of Industrial Hygiene, # 3681; and is co-certified in safety, but the Board of Safety Professionals, #12248. He holds a masters degree in Environmental Science from the University of Colorado - Denver and a Bachelor of Science Degree in Community Health, from the University of Northern Colorado. He has practiced IH and safety since 1980, with project experience at over 20 major Comprehensive Environmental Response Compensation and Liability Act Sites and 4 U.S. Department of Energy (DOE) facilities within the western United States. He initiated and managed an IH consulting firm from 1988 to 1999, employing 5 Certified Industrial Hygienists and has provided assessments, training, and consultation to over 400 institutions and businesses in the United States, Germany, Kuwait, Iraq, Indonesia, Taiwan, and Australia. He has served as the team lead for the Department of Homeland Security - Biological Emergency Support Team as a member of the HAZMAT Team at the Los Alamos National Laboratory (LANL) and worked directly with the Centers for Disease Control Infectious Disease Branch and the National Institute for Occupational Safety and Health in the response to a suspected bioterrorism event and in the establishment of response planning for perceived targets of opportunity in New York City, New York. He supported research in airborne agricultural bioterrorism through LANL and Texas A&M West. Examples of past IH assessments performed by Rich Urie include:

- PNL - Hanford Pre Tiger Team IH programmatic assessment & HAZWOPER training.
- LANL Readiness Assessment of the TA-54 Decontamination, Volume Reduction System & training.
- Rocky Flats Plant post Tiger Team IH HAZWOPER programmatic assessment and generation of the original HAZWOPER Health and Safety Program.
- U.S. Army Support Operations Iraq/Kuwait: IH risk assessments & training.
- Freeport Indonesia annual IH programmatic Assessments and staff training program.
- Adolph Coors Company IH Emergency Preparedness Assessment and Training.
- Homestake Gold Mine IH Programmatic Assessment.
- National Aeronautics and Space Administration (NASA) White Sands Test Facility IH field Assessments.
- AMOCO Production emergency response assessor, expert witness, and trainer.

He is the author of three publications on the subject of Personal Protective Equipment and associated risk assessments. One such publication was in collaboration with the American Conference of Governmental Industrial Hygienists. He has served as an expert witness in Federal court regarding related IH subject matter, and provided IH presentations to the U.S. Attorney General's Office, Department of Homeland Security, NASA, National Mining Engineers Conference, and DOE, among others. Mr. Urie is currently the IH program representative for the DOE Office of River Protection.

Mario Moreno, Team Member

Mr. Moreno holds a bachelor's degree from California State Polytechnic University in Chemical Engineering. He has provided engineering related services to the U.S. Department of Energy (DOE) for 20 years, including an assignment as the program manager for the Single-Shell Tank stabilization efforts. Mario, formerly with the tank farm nuclear safety/authorization basis; is currently working towards Industrial Hygiene (IH) certification under the DOE Office of River Protection IH mentorship program and has completed a number of IH technical courses. He has participated in numerous health and safety related assessments at the Hanford Site.

washington river protection solutions
PO Box 850
Richland, WA 99352

June 11, 2009

WRPS-0901072 R1

Mr. J. C. Poniatowski, Contracting Officer
U.S. Department of Energy
Office of River Protection
Post Office Box 450
Richland, Washington 99352-0450

Dear Mr. Poniatowski:

CONTRACT NO. DE-AC27-08RV14800 – WASHINGTON RIVER PROTECTION SOLUTIONS LLC RESPONSE TO PHASE 1, INDUSTRIAL HYGIENE TECHNICAL BASIS ASSESSMENT A-09-ESQ-TANKFARM-001, "WASHINGTON RIVER PROTECTION SOLUTIONS LLC CORRECTIVE ACTION PLAN"

Reference: Letter, J. C. Poniatowski, ORP, to J. M. Armstead, WRPS, "Contract No. DE-AC27-08RV14800 – Approval of Extension to the Washington River Protection Solutions LLC (WRPS) Response to Results of Assessment A-09-ESQ-TANKFARM-001," 09-ESQ-175/0901072, dated May 20, 2009.

This letter transmits Washington River Protection Solutions LLC (WRPS) response to the U.S. Department of Energy, Office of River Protection (ORP) assessment A-09-ESQ-TANKFARM-001, Phase I, "Industrial Hygiene Technical Basis." ORP requested a response from WRPS by May 16, 2009, and WRPS was granted an extension to June 15, 2009 in the referenced letter. There were four findings and one observation identified in the assessment report. Enclosed is the WRPS Corrective Action Plan (CAP) that addresses these findings.

Per our commitment to ensure that the highest standards of performance continues, the enclosed Corrective Action Plan addresses the corrective actions taken by WRPS to control or remove any adverse impact from the non-compliant condition, corrective actions taken to identify the extent of condition, and corrective actions taken to correct the causes, and prevent further findings, and the date when all corrective actions will be completed. The corrective actions outlined in the enclosed CAP have been discussed with Ms. S. J. Olinger, Ms. S. L. Charboneau, and Messrs. W. J. Taylor, K. A. Hoar, and R. L. Urie of your staff.

At a meeting on June 5, 2009, Ms. S. J. Olinger directed WRPS to respond to the observation. WRPS is requesting 45 days from the date of this letter to provide a response to the observation.

If you have any questions, please contact me at 372-9168, or Mr. D. T. Tuckness, Worker Safety and Health Manager, at 373-9920.

Sincerely,

(Signature Attached)

J. M. Armstead
Contracts Manager

MWJ:KMR

Enclosure: Corrective Action Plan - Washington River Protection Solutions LLC Response to Phase 1, Industrial Hygiene Technical Basis Assessment A-09-ESQ-TANKFARM-001 (15 pages)

cc: ORP Correspondence Control
S. E. Bechtol, ORP
S. L. Charboneau, ORP
K. A. Hoar, ORP
S. C. Johnson, ORP
S. J. Olinger, ORP
M. R. Moreno, ORP
W. J. Taylor, ORP
M. J. Urie, ORP

WRPS Correspondence Control
J. C. Allen-Floyd, WRPS
F. Beranek, WRPS
J. A. Caldwell, WRPS
T. M. Jennings, WRPS
G. J. Johnson, WRPS
W. J. Johnson, WRPS
M. W. Jones, WRPS
S. M. Sax, WRPS
B. R. Thomas, WRPS
D. T. Tuckness, WRPS

Electronically Approved by:

UserName: Armstead, Mike (h0525980)
Title: Prime Contract Manager
Date: Thursday, 11 June 2009, 02:30 PM Pacific Daylight Time
Meaning: Signed per Direction of the TOC President's Office
==========

CORRECTIVE ACTION PLAN

Phase 1 Assessment of Industrial Hygiene Technical Basis
(A-09-ESQ-TANKFARM-001)

U. S. Department of Energy (DOE), Office of River Protection (ORP)

Assessment Report

April 15, 2009

Prepared by:
Washington River Protection Solutions LLC
June 15, 2009

Table of Contents

1.0 Introduction 3
2.0 Corrective Action Methodology 3
3.0 Corrective Action Plan Structure 3
4.0 Finding Number A-09-ESQ-TANKFARM-001-F01 4
5.0 Finding Number A-09-ESQ-TANKFARM-001-F02 7
6.0 Finding Number A-09-ESQ-TANKFARM-001-F03 10
7.0 Finding Number A-09-ESQ-TANKFARM-001-F04 12
8.0 Review and Approval of WRPS Corrective Actions 15
9.0 Corrective Action Plan Reporting and Closure 15

1.0 Introduction

The U.S. Department of Energy, Office of River Protection (ORP) performed an assessment of the Tank Operations Contractor "Industrial Hygiene Technical Basis." The assessment report was transmitted on April 15, 2009. The assessment resulted in four findings. This Corrective Action Plan (CAP) addresses the following issues:

- **A-09-ESQ-TANKFARM-001-F01:** Contrary to 29 CFR 1910.120(p)(5), "New Technology Program, " 29 CFR 1910.120(o)(1), "New Technology Programs" and 1910.120(o)(2) WRPS has not established and implemented programmatic procedures which direct the evaluation and introduction of new technologies into the WRPS Environmental Safety Health & Quality group, which includes the IH program.
- **A-09-ESQ-TANKFARM-001-F02:** Contrary to 29 CFR 1910.132(d), 1910.132(d)(1), 1910.132(d)(1)(i), 1910.132(d)(1)(ii), 1910.132(d)(2), 1910.134(c)(1), 1910.134(c)(1)(i), 1910.120(p)(8), WRPS has not established a written, fully comprehensive decision logic for the selection and use of PPE.
- **A-09-ESQ-TANKFARM-001-F03:** Contrary to 10 CFR 851.21, "Hazard Identification and Assessment" there is a lack of specified criteria in the selection of direct reading air monitoring instrumentation and interpretation of results.
- **A-09-ESQ-TANKFARM-001-F04:** Contrary to 10 CFR 851.21 and 851.23, there is an absence of written direction to incorporate the mandated goal of reducing worker exposure to carcinogens and all other chemicals to levels ALARA, below the Chemicals of Potential Concern (COPC) Occupational Exposure Limit (OEL).

2.0 Corrective Action Methodology

A process based on WRPS procedure TFC-ESHQ-Q_C-C-01, *Problem Evaluation Request*, and TFC-ESHQ-Q_ADM-C-12, *Apparent Cause Analysis and Corrective Action Planning*, was used to develop this CAP. The Findings are documented in Problem Evaluation Requests (PERs) in the Washington River Protection Solutions LLC (WRPS) Issues Management System. The causal analysis, extent of condition, remedial corrective actions, and planned corrective actions for the Findings are documented and tracked in the associated PERs. The causes summarized below are supported by an analysis using commonly accepted causal analysis methods.

3.0 Corrective Action Plan Structure

Each finding is addressed in a separate section. For each finding, the following is provided: background; corrective actions that have been taken to control or remove any adverse impact from the noncompliant conditions until sustainable corrective actions are implemented; corrective actions that will be taken to identify the extent of conditions, correct the causes, and prevent further findings; and the date when all corrective actions will be completed verified and compliance to the applicable requirements achieved.

4.0 Finding Number A-09-ESQ-TANKFARM-001-F01

4.1 Finding

Contrary to 29 CFR 1910.120(p)(5), "New Technology Program, " 29 CFR 1910.120(o)(1), "New Technology Programs" and 1910.120(o)(2) WRPS has not established and implemented programmatic procedures which direct the evaluation and introduction of new technologies into the WRPS Environmental Safety Health & Quality group, which includes the IH program.

4.2 Background

WRPS has written programs and procedures describing the processes for actively seeking out and/or developing new technology to improve worker protection. The written documents cover engineering technology development, instrumentation, and respiratory protection. Examples of technology include waste handling equipment, instrumentation and PPE. Procedures and training are developed when new technology is introduced to ensure employee protection is maintained.

The need for technology development is identified by WRPS when existing processes are inadequate or inefficient and no proven technology is available in the industry for the intended application. Inadequate or inefficient processes often result in workers spending more time in hazardous environments, which increases the risk of harm. TFC-PLN-90 "Technology Development Management Plan" defines the tank farm work processes for developing and deploying new technologies. TFC-PLN-90 is a formal, written document that includes engineering, quality assurance and procurement requirements and complies with 29 CFR 1910.120 (o)(1) as a procedure "...for the introduction of effective new technologies and equipment developed for the improved protection of employees working with hazardous waste..." The technology development process progresses through 3 phases. During phase I, discussions are held with potential vendors who have promising technologies that can be developed for WRPS. A formal procurement is initiated to support further development and testing. The statement of work includes functional criteria and testing requirements for the end use of the developmental technology. During phase II, promising technology is subjected to qualification testing to verify that it meets the intended performance and functional criteria. Test plans and procedures are developed. Inspection is conducted during testing to verify compliance with approved procedures. Prior to release for deployment, the QA engineer verifies the quality of the technology for the intended use. Phase III is deployment. The responsible implementing organization applies existing systems for procedures, receipt inspection, storage, handling and work planning to deploy the technology in the field. TFC-PLN-90 also includes a graded application of Quality Assurance program requirements concerning each phase of technology development.

As an example, design is underway on an innovative robotic arm that offers the potential to increase the efficiency of waste removal from single-shell tanks. The arm, referred to as the Mobile Arm Retrieval System (MARS), will be capable of a wide range of motion and include

telescoping capabilities to enable it to reach the tank extremities. Interchangeable tools on the end of the arm will be used to break up the waste, move it to a pump and remove it from the tank. Incorporating lessons learned from other DOE sites and the corporate parents of WRPS with new technology innovations such as use of lightweight and high-strength composite materials have increased the options for effective tank waste retrieval. Improved retrieval effectiveness and efficiency is expected to lead to workers spending less time in hazardous environments.

TFC-PLN-64 "Industrial Hygiene Instrumentation Plan" includes a formal selection and evaluation process to be implemented prior to purchase of an instrument. This evaluation is conducted by an IH assisted by IHTs, Engineering, Quality Assurance, and the maintenance calibration contractor. TFC-ESHQ_S-IH-CD-38 "Evaluation and Procurement of Industrial Hygiene Monitoring Equipment" is the document that describes in detail the instrument evaluation process. In addition, WRPS has included in the instrument maintenance calibration subcontract statement of work a requirement for the subcontractor to notify WRPS of advances in IH instrumentation or newer models that will improve IH monitoring accuracy or efficiency, including those demonstrated to be successfully evaluated by other Hanford contractors. As an example, the portable gas chromatograph/mass spectrometer (GC/MS) was selected as a method to quickly qualitatively analyze for many of the chemicals of potential concern in vapor grab samples. This improved the efficiency in determining whether protective measures are warranted for a given activity and work location.

Additionally in the area of industrial hygiene instrumentation, WRPS's Performance Objectives, Metrics and Commitments includes an objective for new instrumentation evaluation. Initial evaluation of four potential instrumentation technologies has been completed and further evaluation of one of the technologies (Photon Transfer Reaction Mass Spectrometry) is continuing for use as a real time monitor for VOCs in the tank farms.

In the area of personal protective equipment, WRPS continually looks for new technology. Several documents help drive these activities. Examples where these evaluations have lead to the use of new technology:

- The identification of a different respirator that could be used in locations where a powered air purifying respirators (PAPR) equipped with a high efficiency particulate cartridge equipped, hard hat and hood would be required. This PAPR also is the first model to have audible and visual low flow and low battery alarms. After evaluation of the respirators for tank farm applications and user requirements, the respirators were procured by operations. A maintenance and testing program specific to the PAPRs was developed to ensure safe and reliable operation when in use. The program specifies maintenance, testing, repair and setup of the battery power pack and filter housing.
- The upgrade to use nickel metal hydride battery in PAPRs. These batteries offer increased airflow to the user and can operate the PAPR blower units longer than the previously used nickel-cadmium battery. The nickel metal hydride battery is equipped with a red indicator light that activates after about eight to nine hours of continuous use

and alerts the user that the battery needs to be changed-out for a fully charged battery. These batteries also are not prone to developing a memory.

- The identification of OREX clothing that reduces the potential for heat stress. Currently another generation of OREX is under evaluation that could in some cases replace the use of rainsuits and further reduce the risk of heat stress.

4.3 The Corrective Actions Taken to Control or Remove any Adverse Impact from the Noncompliant Conditions and the Results Achieved

Several examples of procedures, processes and field applications were identified that implement the requirement for new technology. No adverse impacts were identified as a result of the finding. Therefore, no immediate corrective actions were taken.

4.4 Corrective Actions Taken to Identify the Extent of Condition

This finding already applies at the company level. Therefore, no extent of condition was performed for this finding.

4.5 Corrective Actions to be Taken to Correct the Causes and Prevent Further Findings

As identified in the assessment report, there are many examples that show in written documents and current practice that WRPS actively pursues new technologies. However, there is an opportunity to improve the program by formalizing the description of the existing practices within engineering and the Health and Safety organization for complying with the cited standard and compiling the new technologies evaluated in a centralized list. In addition to making compliance easier to demonstrate, these improvements further emphasize the WRPS commitment to continuously improving worker protection. The following actions will be taken:

No.	Action	Deliverable(s)	Responsible Manager	Completion Date
CA-01-01	Update TFC-PLN-55 "Industrial Hygiene Safety Management Program Plan" to clearly describe the WRPS practice for complying with the standard, give direction on giving input to the Health and Safety organization on new technologies evaluated, and adding to the requirements section 29 CFR 1910.120(p)(5), "New Technology Program, " 29 CFR 1910.120(o)(1), "New Technology Programs" and 1910.120(o)(2).	Updated procedure	M. Jones	8/28/09

CA-01-02	Update TFC-PLN-91 "Industrial Safety Management Program Plan" to clearly describe the WRPS practices related to industrial safety worker protection equipment (e.g., fall protection devices) for complying with the standard, give direction on giving input to the Health and Safety organization on new technologies evaluated, and adding to the requirements section 29 CFR 1910.120(p)(5), "New Technology Program, " 29 CFR 1910.120(o)(1), "New Technology Programs" and 1910.120(o)(2).	Updated procedure	W. Gaydosh	8/28/09
CA-01-03	Update TFC-PLN-90 "Technology Development Management Plan" to clearly state the WRPS practice for compliance with the new technology standard, give direction on giving input to the Health and Safety organization on new technologies evaluated, and adding to the requirements section 29 CFR 1910.120(p)(5), "New Technology Program, " 29 CFR 1910.120(o)(1), "New Technology Programs" and 1910.120(o)(2).	Updated procedure	R. Mendoza	8/28/09
CA-01-04	Develop and maintain a centralized list of new technologies evaluated. The list will include input from engineering, industrial safety and industrial hygiene.	List of new technologies	M. Jones	7/31/09

4.6 Finding Analysis

WRPS has reviewed this finding and initiated corrective actions to promote improvement.

5.0 Finding Number A-09-ESQ-TANKFARM-001-F02

5.1 Finding

Contrary to 29 CFR 1910.132(d), 1910.132(d)(1), 1910.132(d)(1)(i), 1910.132(d)(1)(ii), 1910.132(d)(2), 1910.134(c)(1), 1910.134(c)(1)(i), 1910.120(p)(8), WRPS has not established a written, fully comprehensive decision logic for the selection and use of PPE.

5.2 Background

TFC-ESHQ-S_SAF-C-02, "Job Hazard Analysis" is the procedure for hazard assessment and control selection at WRPS. The work hazard analysis document produced during implementation of this procedure and TFC-OPS-MAINT-C-02, "Pre-Job Briefing," are the tools for communicating to employees the hazard and controls for a job. If PPE is required, TFC-ESHQ-S_IS-C-02, "Personal Protective Equipment" provides selection criteria and guidance. RPP-23074 "Tank Vapor Chemicals of Potential Concern, Existing Direct Reading Instrumentation and Personal Protective Equipment Considerations" took the newly released RPP-22491 "Industrial Hygiene Chemical Vapor Technical Basis" and considered respiratory protection, protective glove and suit materials for each chemical of potential concern (COPC). RPP-34147 "Tank Waste Dermal Exposure Assessment" evaluated actual dermal tank waste exposures and calculated theoretical worst case exposure scenarios for tank farm activities for dermal and ocular exposure to tank waste, tank vapors, and tank condensate. It was concluded that standard engineering controls, work practices and protective equipment prevent worker contact with tank wastes, and the worst case dermal hazard scenarios are not met. These conclusions are incorporated in TFC-ESHQ-S_IS-C-02, Attachment A. If respirators are required, TFC-ESHQ-S_IH-C-05, "Respiratory Protection" provides selection criteria and guidance. This guidance addresses the requirements listed in 10 CFR 1910.134, "Respiratory Protection" (evaluation of hazards, identification of relevant workplace and user factors that affect performance and reliability, exposure time, exposure concentration, chemical state and physical form of hazard, use of NIOSH approved respirator, respirator assigned protection factor, selection of proper filter/cartridge, cartridge change out schedule). Tank waste vapor exposure characterization studies have been performed looking at sampling and monitoring data collected during waste disturbing and non-waste disturbing activities. Data and conclusions from these studies have been integrated into worker protection control measures. For example, headspace, source, area, and personal data are available for use in IH hazard analyses performed in TFC-ESHQ-S_IH-C-48, "Managing Vapor Control Zones" and documented in a chemical exposure hazard analysis. During emergency response, WRPS emergency procedures cover initial responses to put employees in safe conditions (e.g., evacuate upwind, take cover, etc...) and then the incident commander/HFD, with input from emergency response radiological and chemical hazard assessors, provide direction on the hazard controls for emergency responders.

5.3 The Corrective Actions Taken to Control or Remove any Adverse Impact from the Noncompliant Conditions and the Results Achieved

Inhalation and dermal exposure assessments for tank waste hazards have been documented and determinations of controls, including PPE, have been selected based on a sound and accepted

decision logic. The tank farm procedures and practices implement these determinations. No adverse impacts were identified as a result of the finding. Therefore, no immediate corrective actions were taken.

5.4 Corrective Actions Taken to Identify the Extent of Condition

This finding already applies at the company level. Therefore, no extent of condition was performed for this finding.

5.5 Corrective Actions to be Taken to Correct the Causes and Prevent Further Findings

As identified in the discussion section of the assessment, the TFC-ESHQ-S_IS-C-02, "Personal Protective Equipment" does not provide a pre-determined process for the selection and service life of chemical protective clothing. It is recommended that TFC-ESHQ-S_IS-C-02, "Personal Protective Equipment" be revised to include a reference for guidance on a recommended chemical protective clothing (CPC) material reference for guidance on CPC selection and service life. This will strengthen the tools available to the industrial hygiene professionals responsible for selecting of CPC. It was also identified that the language in TFC-ESHQ-S_IS-C-02, "Personal Protective Equipment" regarding contact with tank waste could be confusing. It is recommended that TFC-ESHQ-S_IS-C-02, "Personal Protective Equipment" be revised to clarify the hazard and controls associated with tank waste contact. The clarifying statements will clearly provide the existing determination for dermal exposure protection from contact with tank waste. The following actions will be taken:

No.	Action	Deliverable(s)	Responsible Manager	Completion Date
CA-02-01	Update TFC-ESHQ-S_IS-C-02, "Personal Protective Equipment" to include a reference for guidance on a recommended chemical protective clothing (CPC) material reference for guidance on CPC selection and service life.	Updated procedure	W. Gaydosh	9/30/09
CA-02-02	Update TFC-ESHQ-S_IS-C-02, "Personal Protective Equipment" to clarify the hazard and controls associated with tank waste contact.	Updated procedure	W. Gaydosh	9/30/09

5.6 Finding Analysis

WRPS has reviewed this finding and initiated corrective actions to promote improvement.

6.0 Finding Number A-09-ESQ-TANKFARM-001-F03

6.1 Finding

Contrary to 10 CFR 851.21, "Hazard Identification and Assessment" there is a lack of specified criteria in the selection of direct reading air monitoring instrumentation and interpretation of results.

6.2 Background

Two procedures and an "IH Monitoring/Sampling Fact Sheet" address the specific selection criteria for direct reading air monitoring instrumentation. The two procedures are TF-OPS-IHT-007 "Using Direct Reading Instruments" and TFC-ESHQ-S_IH-CD-38 "Evaluation and Procurement of Industrial Hygiene Monitoring Instruments".

Guidance for field selection of instrumentation is provided to the industrial hygienist in TF-OPS-IHT-007 "Using Direct Reading Instruments". TF-OPS-IHT-007 Attachment 4 itemizes selection criteria for choosing direct reading instruments for field use. Section 5.1.3 states "SELECT the appropriate direct reading instrument for the contaminants to be sampled, considering:

- Instrument accuracy
- Instrument sensitivity
- Instrument limitations
- Instrument power sources
- Instrument operating temperature ranges
- Instrument response times
- Potential interferences

"IH Monitoring/Sampling Fact Sheet" found on the "Safety & Health Programs" home page provides a detailed guide on what monitoring instrument to select for evaluating different COPC's. Examples from this fact sheet include the use of iTX for ammonia and ppbRAE for Ethylamine.

Guidance for the procurement of new instrumentation is provided in TFC-ESHQ-S_IH-CD-38 Attachment 1, section 3.0 which directs the industrial hygienist to use form A-6003-896 to ensure that all applicable factors have been considered and evaluated prior to the procurement of any monitoring instrument." Form A-6003-896: "Evaluation of Industrial Hygiene Monitoring Instruments Form" lists selection criteria under the column "EVALUATION FACTOR" to include such items as:

- What is the need for the instrument, ie new chemical hazard, improved technology?

- What agent/s does the instrument measure and by what method?
- What are the optimal operating conditions (temperature, relative humidity and pressure) for operation of the instrument?
- What environmental factors will cause interferences such as dust, humidity or electric fields?
- Note the high and low detections limits, the detection range, and sub-ranges (e.g., 0-200 ppm and 20-1000 ppm)
- What is the detection limit?
- What chemicals will cause false positive/false negative readings or other interferences?
- Will the instrument record specific data, such as the average, the peak, and lowest readings?
- List limitations of the instrument that are not specified above.

6.3 The Corrective Actions Taken to Control or Remove any Adverse Impact from the Noncompliant Conditions and the Results Achieved

Several examples of specific criteria for the selection of direct reading air monitoring instruments and interpretation of results have been provided. No adverse impacts were identified as a result of the finding. Therefore, no immediate corrective actions were taken.

6.4 Corrective Actions Taken to Identify the Extent of Condition

This finding already applies at the company level. Therefore, no extent of condition was performed for this finding.

6.5 Corrective Actions to be Taken to Correct the Causes and Prevent Further Findings

As identified in the discussion section of the assessment, reliance on professional judgment creates the potential for errors, inconsistency and difficulty for auditors. While WRPS has an industrial hygiene qualification process (rated highly by the ORP assessment) that enhances our staff's professional judgment, an update to TF-OPS-IHT-007 is recommended to incorporate a decision logic for instrument selection and data interpretation for routine and non-routine monitoring. The update will be communicated to the industrial hygienists. The rationale for the volatile organic compound action level will be provided in an industrial hygiene fact sheet. These actions are intended to reduce the risk of errors and inconsistencies associated with the reliance on professional judgment of industrial hygienists and auditors. The following actions will be taken:

No.	Action	Deliverable(s)	Responsible Manager	Completion Date
CA-03-01	Update TF-OPS-IHT-007 by incorporating documentation of the decision logic for routine and non-routine monitoring regarding instrument selection and data interpretation.	Updated procedure.	M. Jones	9/30/09
CA-03-02	Communicate to the industrial hygienists the changes to the procedure.	Communication to the industrial hygienists.	M. Jones/K. Roueche/L. Gurney	10/30/09
CA-03-03	Document the rationale for the volatile organic compound action level.	Industrial hygiene fact sheet.	M. Jones	7/17/09

6.6 Finding Analysis

WRPS has reviewed this finding and initiated corrective actions to promote improvement.

7.0 Finding Number A-09-ESQ-TANKFARM-001-F04

7.1 Finding

Contrary to 10 CFR 851.21 and 851.23, there is an absence of written direction to incorporate the mandated goal of reducing worker exposure to carcinogens and all other chemicals to levels ALARA, below the Chemicals of Potential Concern (COPC) Occupational Exposure Limit (OEL).

7.2 Background

WRPS fully endorses the best management practice "to maintain chemical vapor exposures as low as is practical." WRPS believes this is a key aspect of our worker protection program. The ALARA concept in industrial hygiene is the anticipation, recognition, evaluation and control of hazards and is based on American Industrial Hygiene Association "A Strategy for Assessing and Managing Occupational Exposures" (AIHA Strategy) as provided in guidance from DOE G 440.1-3.

While there is not a formal description of the ALARA concepts as related to industrial hygiene, the tenets of ALARA concepts (similar to those or the Radiological Control Program) are generally described in our existing procedures and processes. Overall, WRPS procedures, plans and training courses have, through various means, provided direction and approaches to maintaining chemical exposure to as low as is practical.

At the TOC, the defining document for chemical ALARA concepts is the RPP-13033 Tank Farm Documented Safety Analysis. Chapter 8, "Hazardous Material Protection," section 8.4 states the hazardous material ALARA policy and program as the following: "The hazardous material protection program ensures that exposure to hazardous materials are below regulatory limits and where possible additional controls are in place to further reduce exposures." The chapter continues with a description of hazardous material training, hazard identification, administrative limits, occupational medical surveillance, respiratory protection, hazardous material monitoring, instrumentation, record keeping, hazard communication, and occupational chemical exposures. These ALARA concepts are implemented through other safety and health programmatic documents.

Additional carcinogen and chemical exposure direction is found in TFC-ESHQ-IH-STD-11 "Carcinogen Control" and TFC-PLN-34, the "Industrial Hygiene Exposure Assessment Strategy." The primary purpose of TFC-PLN-34, which is based on the AIHA Strategy, is to ensure exposures are characterized and controlled well enough to keep present risks acceptable and to put the organization in the position to manage future risks. Managing future risks is, in part, a function of maintaining exposures to a level that is acceptable.

WRPS believes there is improvement needed to make the chemical ALARA a cohesive program. Actions to improve the program are described in section 7.5.

7.3 The Corrective Actions Taken to Control or Remove any Adverse Impact from the Noncompliant Conditions and the Results Achieved

Programs, procedures and training courses have been identified which provide written direction on maintaining carcinogen and chemical exposures ALARA. No adverse impacts were identified as a result of the finding. Therefore, no immediate corrective actions were taken.

7.4 Corrective Actions Taken to Identify the Extent of Condition

This finding already applies at the company level. Therefore, no extent of condition was performed for this finding.

7.5 Corrective Actions to be Taken to Correct the Causes and Prevent Further Findings

In an effort to improve the WRPS IH ALARA program, actions have been identified. These improvement actions will assist WRPS in providing a comprehensive and cohesive process for maintaining chemical vapor exposures as low as is practical.

We will improve our documents on IH ALARA. A policy statement will be added to our Industrial Hygiene Safety Management Program Plan stating our goal is "to maintain chemical vapor exposures as low as is practical." We will review our plans and procedures to ensure a consistent approach on IH ALARA concepts. We will develop, as part of the ongoing actions related to the Hanford Concerns Council (HCC) Phase I independent review, a sampling strategy that provides a method for management to evaluate program performance in maintaining exposures to tank vapors by reducing uncertainties.

We will develop a communication plan for improving the work force awareness of IH ALARA principles. This plan could include, for example, communication of information about IH ALARA principles and work practices through campaigns (e.g. posters) and use of the Chemical Vapor Solutions Team (CVST).

In addition, WRPS is committed to having an outside review of the IH ALARA process at the TOC as compared to the principles of a radiological ALARA program, to assist in determination of areas where the IH ALARA process could be improved. This outside review will identify gaps for WRPS to determine which elements of ALARA concepts can be better described, defined and implemented through our Safety and Health Programs to support the goal of "to maintain chemical vapor exposures as low as is practical."

No.	Action	Deliverable(s)	Responsible Manager	Completion Date
CA-04-01	Add the policy statement "to maintain chemical vapor exposures as low as is practical"	Revised TFC-PLN-55 Industrial Hygiene Safety Management Program Plan	M. Jones	8/28/09
CA-04-02	Develop and provide to HCC a strategy for continued tank vapor exposure assessment.	New draft document provided for HCC review.	M. Jones	6/22/09
CA-04-03	Review and update TOC IH procedures to provide a consistent message on ALARA concepts	Updated documents	M. Jones	11/30/09
CA-04-04	Develop a communication plan to improve IH ALARA awareness.	New communication plan	D. Tuckness	8/28/09
CA-04-05	Conduct a review of the IH ALARA process compared to a radiation ALARA program and determine areas for improvement	Issue statement of work with schedule to outside reviewer.	F. Beranek	8/28/09

7.6 Finding Analysis

WRPS has reviewed this finding and initiated corrective actions to promote improvement.

8.0 Review and Approval of WRPS Corrective Actions

This CAP was developed by the assigned responsible manager and was approved by the Safety & Health Manager.

9.0 Corrective Action Plan Reporting and Closure

Corrective actions for each Finding will be tracked and monitored using the PER system.

To close an action, the responsible manager must provide objective evidence documenting completion of the actions and verifying compliance to the applicable requirements. Closure documentation will be attached electronically to the associated PER.

Save

Problem Evaluation Request (PER)

WRPS-PER-2009-0898
In Process/Work

PER No	Date of Discovery	Time of Discovery (24:00)	Project
WRPS-PER-2009-0898	05/05/2009	15:37	S&H

Location

OTHER

How Was Problem Discovered

DOE-ORP

Description of Concern or Problem

The U. S. Department of Energy, Office of River Protection (ORP) conducted a Phase I assessment (A-09-ESQ-TANKFARM-001) of the programmatic elements of the Washington River Protection Solutions LLC Industrial Hygiene program during January and February 2009. The assessment was directed at four elements of interest including past assessments, program technical basis and procedures, staff qualifications, and program management. The assessment resulted in four Findings and one Observation including:

A-09-ESQ-TANKFARM-001-F03: Contrary to 10 CFR 851.21, "Hazard Identification and Assessment" there is a lack of specified criteria in the selection of direct reading air monitoring instrumentation and interpretation of results.

Requirement Not Satisfied	Source Document Number

Equipment Identification Number	System Identification

Immediate actions Taken or Planned

Initiated PER

Recommended Corrective actions

Assign to M. Jones. Develop CAP and transmit to ORP.

Originator Contact

e-mail

Originators Name	Originators ID	Originators Phone	Date Initiated
Mata, Beth L	H0056284	(509) 373-0422	05/05/2009

SHIFT OPERATIONS REVIEW

Title

ORP Assessment of Industrial Hygiene Program Finding 3

How Discovered	Agency
Externally Identified	DOE ORP

Reportability	SSC Operability	Operability Review	Comp Measures Req
Non-Reportable	N/A	N/A	

Describe actions Taken or Recommended

No additional actions taken or recommended by BOSO.

SO Reviewer Name	SO Reviewer ID	SO Reviewer Phone	SO Review Date
Higham, Dale B	H0078950	(509) 373-2689	05/05/2009

SCREENING

PER Significance Level			
PER with Resolution			
Independent Assessment Review	**Occurrence Report Number**	**Externally Identified**	
Yes		Yes	
Assigned Responsible Manager	**Facilities Rep / SSO**	**Safety Management Rep**	

Jones, Mark W		Tuckness, Dennis T	
Program		**Safety Management Program**	
• N/A		• Industrial Hygiene	
PER Screening Comments			
PER w/ Res with informal Apparent Cause Analysis (Nancy Brown 05/06/09)			
Causal Code			
A5B2C05	Communications LTA Written Communications Content LTA Ambiguous instructions/requirements		
A5B3C01	Communications LTA Written Communication Not Used Lack of written communication		
MGT/Comm/Train	**Human Performance**	**GEMS**	**Equip/Eng/Other**
Failed Barrier	**ORPS Code**	**Functional Area**	**Work Process**
	Not Applicable	Occupational Safety and Health	• Assessments • IH Monitoring
ISMS	**Consequence Code**		
Identify and analyze hazards	• ^N/A^ - No consequence code applies		
PER Screening Chair	**PER Screening Chair ID**	**PER Screening Chair Phone**	**PER Screening Date**
Brown, Nancy L	H0088797	(509) 373-0992	05/06/2009
PAAA REVIEW			
PAAA Screening	**PAAA Codes**	**Function Codes**	
PAAA, Non-NTS Reportable	• 10 CFR Appendix A to Part 851 (6)	• Hazard Prevention and Abatement • Industrial Hygiene • Work Practices, Procedures, and Administrative Controls	
NTS Report Number	**NTS Report Date**		
Repetitive / Recurrent	**Programmatic**	**Intentional Violation / Misrepresentation**	
No	No	No	
PAAA Screening Comments			
TFC-PLN-47, Section 6.4			
PAAA Reviewer Name	**PAAA Review Date**		
Anderson, Craig E	05/06/2009		
PAAA Approver Name	**PAAA Approve Date**		
Anderson, Craig E	05/07/2009		
SENIOR MANAGEMENT REVIEW/CONCURRENCE			
TF Operations Morning Leadership Call			
N/A			
Instructions for Responsible Manager			
Review the PER Screening Tab for requested data. Complete the task in E-STARS in accordance with TFC-ESHQ-Q_C-C-01, and TFC-ESHQ-Q_ADM-C-12 Apparent Cause Analysis & Corrective Action Planning.			
Senior Management	**Sr Mgmt ID**	**Sr Mgmt Phone**	**Sr Mgmt Review Date**
Brown, Nancy L	H0088797	(509) 373-0992	05/07/2009
CAUSE ANALYSIS			
Description of Occurrence			

There is a lack of some specified criteria in the selection of direct reading air monitoring instrumentation and interpretation of results and there is a certain amount of reliance on professional judgment. Both of these conditions can increase the risk for errors and inconsistency.

Extent of Condition

The existing WRPS plans/procedures and supporting technical documents containing selection criteria for instrument selection were reviewed to determine if there were compliance issues with 10 CFR 851. There is no evidence of non-compliance. Opportunities for improvement were identified. The WRPS procedures/plans that need to be revised are identified in the attached corrective action plan.

Safety Significance

This is a programmatic improvement that is not likely to impact employee safety, equipment or environmental protection.

Generic Implications

Remedial Corrective Action

Write Corrective Action Plan to detail the procedure/plan changes to provide a more comprehensive written guidance on instrument selection criteria.

Causal Analysis, Apparent Cause and/or Root Cause Analysis

Currently the selection of direct reading air monitoring instrumentation and interpretation of results is based on the professional judgment of the industrial hygiene staff. TFC-OPS-IHT-007; "Using Direct Reading Instruments" does not contain decision logic for instrument selection and data interpretation for routine and non-routine monitoring. WRPS has determined that the addition of decision logic as noted in the corrective action plan would reduce the risk of errors and inconsistencies associated with the reliance on professional judgment of the industrial hygiene staff.

CORRECTIVE ACTIONS

Actionee	Action Due Date	E-STARS Number
Jones, Mark W	09/30/2009	

Action

Update TF-OPS-IHT-007 by incorporating documentation of the decision logic for routine and non-routine monitoring regarding instrument selection and data interpretation.

Deliverable: Updated procedure

Corrective Action Attachments

Actionee	Action Due Date	E-STARS Number
Jones, Mark W	10/30/2009	

Action

Communicate to the industrial hygienists the changes to the procedure; TF-OPS-IHT-007, Using Direct Reading Instruments.

Deliverable: Communication documents

Corrective Action Attachments

Actionee	Action Due Date	E-STARS Number
Jones, Mark W	07/17/2009	

Action

Document the rationale for the volatile organic compound action level.

Deliverable: Industrial hygiene fact sheet

Corrective Action Attachments

ATTACHMENTS

0900723_09-ESQ-076_WRPS_-_[0904160568].pdf

Link to PER

WRPS 0901072 R1 Letter.doc[1].pdf

WRPS-0901072_R1_Enclosure_Native.doc

AUDIT HISTORY

Change Date	Auditor	Comments
05/07/2009 10:03	Brown, Nancy L	Responsible Manager Task Launched by Brown, Nancy L

-- End of Report --
07/09/2009 04:51 PM

Task# WRPS-PER-2009-0898

E-STARS[R] Report
Task Detail Report
07/09/2009 1651

TASK INFORMATION			
Task#	WRPS-PER-2009-0898		
Subject	RES; ORP Assessment of Industrial Hygiene Program Finding 3		
Parent Task#		**Status**	Open
Reference		**Due**	06/27/2009
Originator	^PER Coordinator	**Priority**	Medium
Originator Phone		**Category**	PER
Origination Date	05/05/2009 1538	**Generic1**	None
Remote Task#		**Generic2**	None
Deliverable	PER Review	**Generic3**	None
Class	None	**View Permissions**	Global
Instructions	*No Instructions*		

ROUTING LISTS

1	Responsible Manager	Active
	Review the PER Screening Tab for requested data. Complete the task in E-STARS in accordance with TFC-ESHQ-Q_C-C-01, and TFC-ESHQ-Q_ADM-C-12 Apparent Cause Analysis & Corrective Action Planning.	
	• Jones, Mark W - Assign - Completed with comments - 06/18/2009 0943 *Instructions:*	
	• Jones, Mark W - Assign - Completed with comments - 06/18/2009 0953 *Instructions:* Did you contact the originator about the PER? Document your contact in the response window.	
	• ^Independent Assessment Review(Penick, Lee R) - Review - Concur - 06/19/2009 1404 *Instructions:* Independent Assessor Review	
	• Tuckness, Dennis T - Review - Concur with comments - 06/19/2009 1411 *Instructions:* Safety Management Representative Review	
2	Review Initial PER	Inactive
	Review New PER	
	• ^SO(Higham, Dale B) - Review - Concur - 05/05/2009 2228 *Instructions:*	
	• ^PER Screening(Brown, Nancy L) - Review - Concur - 05/06/2009 1541 *Instructions:*	
	• ^Mgr Review - Review - Cancelled - 05/07/2009 1003 *Instructions:*	

ATTACHMENTS

Attachments	1. 0900723_09-ESQ-076_WRPS_-_[0904160568].pdf 2. Link to PER 3. WRPS 0901072 R1 Letter.doc[1].pdf 4. WRPS-0901072_R1_Enclosure_Native.doc

COMMENTS

Poster	Jones, Mark W (Bowman, Tami A) - 06/18/2009 0943

Task# WRPS-PER-2009-0898

	Completed		
	Corrective actions ready to launch. bowman 06/158/2009		
Poster	Jones, Mark W (Bowman, Tami A) - 06/18/2009 0953		
	Completed		
	PER originator contacted via telephone. Bowman 06/18/2009		
Poster	Tuckness, Dennis T - 06/19/2009 1411		
	Concur		
	This is in the corrective action plan		
TASK DUE DATE HISTORY			
Modified	05/07/2009 1003 - ^PER Coordinator	**New Due Date**	06/19/2009 1630
Modified	05/07/2009 1003 - ^PER Coordinator	**New Due Date**	06/27/2009 1630
Modified	05/05/2009 1538 - ^PER Coordinator	**New Due Date**	05/07/2009 1630
SUB TASK HISTORY			
Subtask#	WRPS-PER-2009-0898.1		
Subject	RES; ORP Assessment of Industrial Hygiene Program Finding 3		
Originator	Jones, Mark W (Bowman, Tami A)		
	Routing List	*No Active Routing List*	

-- end of report --

INCOMING CORRESPONDENCE COVERSHEET

CORR-2009-0083

Author	Addressee	Correspondence No.
J. C. Poniatowski/ORP	J. M. Armstead/WRPS	0900723 DOE-ORP: 09-ESQ-076

Subject: CONTRACT NO. DE-AC27-08RV14800 – RESULTS OF ASSESSMENT A-09-ESQ-TANKFARM-001, PHASE 1, "INDUSTRIAL HYGIENE TECHNICAL BASIS"

DISTRIBUTION

Washington River Protection Solutions
WRPS Correspondence Control
JC Allen-Floyd
JM Armstead
F Beranek ((Assignee))
HS Berman
MN Brosee
C Burrows
GJ Johnson
WJ Johnson
MW Jones
MA Lindholm
KJ Rueter
DJ Sansotta
SM Sax
BR Thomas
DT Tuckness

Priority:	**NORMAL**
Assignee:	F. Beranek
Received:	April 16, 2009
Due Date:	5/16/2009 – Respond to the assessment findings as directed by ORP.

WRPS Correspondence Control
For Questions call: 376-0271
Outlook Address: ^WRPS Correspondence Control

U.S. Department of Energy
Office of River Protection
P.O. Box 450, MSIN H6-60
Richland, Washington 99352

APR 15 2009

0900723

09-ESQ-076

Mr. Mike Armstead, Contract Manager
Washington River Protection Solutions LLC
2440 Stevens Center Place
Richland, Washington 99354

Dear Mr. Armstead:

CONTRACT NO. DE-AC27-08RV14800 – RESULTS OF ASSESSMENT A-09-ESQ-TANKFARM-001, PHASE I, "INDUSTRIAL HYGIENE TECHNICAL BASIS"

This letter transmits the results of the U.S. Department of Energy, Office of River Protection assessment of the Tank Operations Contractor "Industrial Hygiene Technical Basis." The assessment was completed on February 23, 2009.

The assessment resulted in four findings. The assessment team concluded that there are deficiencies in the programmatic assessment of new technologies to enhance worker safety and health, the selection and use of Direct Reading Instruments for air monitoring, the incorporation of the goal of applying the concept of "As Low As Reasonably Achievable" (ALARA) to chemical vapor exposures, and the selection process for personal protective equipment.

It should be noted that the Washington River Protection Solutions LLC is being requested to demonstrate how the ALARA concept shall be incorporated into the safety culture with respect to the monitoring and control of chemical vapors, as it is being applied to ionizing radiation hazards.

Within 30 days of receipt of this letter you shall respond to the assessment findings. The response shall include:

- The corrective actions that have been taken (i.e., compensatory measures) to control or remove any adverse impact from the non-compliant condition until sustainable corrective actions are implemented;

- The corrective actions that will be taken to identify the extent of condition, correct the causes, and prevent further findings (i.e., Corrective Action Plan); and

- The date when all corrective actions will be completed verified and compliance to the applicable requirements achieved (i.e., completion of an effectiveness review).

APR 15 2009

If you have any questions, please contact me, or your staff may contact William J. Taylor, Assistant Manager, Office of Environmental Safety and Quality, (509) 376-7851.

Sincerely,

Joseph C. Poniatowski
Contracting Officer

ESQ:RLU

Attachment

cc w/attach:
WRPS Correspondence

RECEIVED
APR 16 2009
WRPS
CORRESPONDENCE CONTROL

Attachment
09-ESQ-076
A-09-ESQ-TANKFARM-001

United States Department of Energy
Office of River Protection
Tank Operations Contractor
Industrial Hygiene Technical Basis Assessment

Final Report
A-09-ESQ-TANKFARM-001
March 10, 2009

Richard L. Urie
Team Leader

EXECUTIVE SUMMARY

The U.S. Department of Energy, Office of River Protection (ORP) conducted a Phase I assessment of the programmatic elements of the Washington River Protection Solutions LLC (WRPS) Industrial Hygiene (IH) program from January 16, 2009, through February 20, 2009. The assessment was directed at four elements of interest: past assessments, program technical basis and procedures; staff qualifications; and program management.

Conclusions

There are many very strong elements to the IH technical basis, including a well qualified staff; an extensive sampling and Personal Protective Equipment (PPE) inventory; proper utilization of accredited laboratories; and a solid funding base. The programmatic element for control, conveyance, and management of sampling data appears to be exceptional. WRPS has established over 80 documents related to IH information and directives. However, there is a missing tier of direction, which normally serves as the bridge between the general instructive programs and implementation. Specifically, there is an absence of written methodologies that normally provide the basis for the selection of PPE and some Direct Reading Instruments, which is a fundamental programmatic necessity. There is also a lack of strategic sample planning and data management, which is reportedly being addressed through the support of an expert IH consultative panel. In addition, there is an absence of a dedicated program for the review or development of new technologies for the purpose of enhancing worker health and safety, as required under 10 Code of Federal Regulations (CFR) 851, "Worker Safety and Health Plan."

An overriding observation of the WRPS technical basis is the prevalence of references made to IH professional judgment. ORP acknowledges and encourages the application of professional judgment, with respect to interpretation of directives and real time response to changes in operational needs or off normal events. However, there is an absence of the basis for decision making that has been critically reviewed, documented, and unilaterally applied to the WRPS operations. In addition, there is a lack of documentation of individualized IH decisions, which results in a lack of on-going and post event accountability. Lastly, the WRPS IH goals and objectives neither stipulate, nor discuss the requirement to reduce chemical exposures to As Low As Reasonably Achievable (ALARA), below the Occupational Exposure Limits (OEL). The absence of this goal is reflected in a prevailing attitude through IH and Industrial Hygiene Technician Staff, that chemical vapor exposures are adequately characterized and controlled with respect to conventional standards. ORP shall closely examine the WRPS health and safety culture in the second phase of the assessment to ascertain the degree in which this is problematic in regards to the impacts to the management of off normal events, continued efforts for improvement, and the incorporation of health and performance based goals.

FINDINGS

A-09-ESQ-TANKFARM-001-F01: Contrary to 29 CFR 1910.120(p)(5), "New Technology Program," 29 CFR 1910.120(o)(1),"New Technology Programs" and 1910.120(o)(2) WRPS has not established and implemented programmatic procedures which direct the evaluation and

introduction of new technologies into the WRPS Environmental Safety Health & Quality group, which includes the IH program.

A-09-ESQ-TANKFARM-001-F02: Contrary to 29 CFR 1910.132(d), 1910.132(d)(1), 1910.132(d)(1)(i), 1910.132(d)(1)(ii), 1910.132(d)(2), 1910.134(c) (1), 1910.134(c)(1)(i), and 1910.120(p)(8), WRPS has not established a written, fully comprehensive decision logic for the selection and use of PPE.

A-09-ESQ-TANKFARM-001-F03: Contrary to 10 CFR 851.21, "Hazard Identification and Assessment" there is a lack of specified criteria in the selection of direct reading air monitoring instrumentation and interpretation of results.

A-09-ESQ-TANKFARM-001-F04: Contrary to 10 CFR 851.21 and 851.23, there is an absence of written direction to incorporate the mandated goal of reducing worker exposure to carcinogens and all other chemicals to levels ALARA, below the Chemicals of Potential Concern (COPC) OEL.

OBSERVATION

A-09-ESQ-TANKFARM-001-O01: There is a lack of clear, consolidated information. The WRPS IH technical basis is overly complicated and confusing to both workers and outside viewers. There exists an uncharacteristically high element of deference to professional judgment.

Acronyms

ABIH	American Board of Industrial Hygiene
ACGIH	American Conference of Governmental Industrial Hygienists
AIHA	American Industrial Hygiene Association
ALARA	As Low As Reasonably Achievable
ANSI	American National Standards Institute
CFR	Code of Federal Regulations
CH2M HILL	CH2M HILL Hanford Group, Inc.
COC	Chain of Custody
COPC	Chemicals of Potential Concern
CPC	Chemical Protective Clothing
DOE	U.S. Department of Energy
DRI	Direct Reading Instrument
ESH&Q	Environmental Safety Health and Quality
HCC	Hanford Concerns Council
IH	Industrial Hygiene
IHT	Industrial Hygiene Technician
NIOSH	National Institute for Occupational Safety and Health
OEL	Occupational Exposure Limits
ORP	Office of River Protection
OSHA	Occupational Safety and Health Administration
PAPR	Powered Air Purifying Respirator
PEL	Permissible Exposure Level
PPE	Personal Protective Equipment
SST	Single Shelled Tank
STEL	Short Term Exposure Limit
TFC	Tank Farm Contractor
TFIH	Tank Farm Industrial hygienist
TLV	Threshold Limit Value
VOC	Volatile Organic Compound
WRPS	Washington River Protection Solutions LLC

Table of Contents

1.0 SURVEILLANCE SCOPE 1

2.0 SURVEILLANCE METHODOLOGY 1

3.0 DISCUSSION 1

4.0 CONCLUSIONS 13

5.0 FINDINGS AND OBSERVATIONS 15

6.0 REFERENCES (From DOE Standard IH Practices, DOE-STD-6005-2001 April 2001) 20

APPENDIX A. Principal Document Review and Comments
APPENDIX B. Industrial Hygiene Technical Basis Assessment of WRPS (PLAN), A-09-ESQ-TANKFARM-001
APPENDIX C. Integrated Safety Management System Evaluation Form
APPENDIX D. Assessment Team Biographies

1.0 SURVEILLANCE SCOPE

The scope of this 2009 Phase I assessment of the Washington River Protection Solutions LLC (WRPS) Industrial Hygiene (IH) program, is limited to the foundation of the program, involving an assessment of plans, procedures, risk assessment documents, staff qualifications, and documented management tools. Within this scope, the U.S. Department of Energy (DOE), Office of River Protection (ORP) team addresses the primary question: "Is WRPS properly planning, and effectively managing an industrial hygiene, occupational exposure assessment, and hazards management program that meets the intent of 10 CFR 851?"

2.0 SURVEILLANCE METHODOLOGY

The methodology of the assessment consisted of four discrete efforts, followed by Generator Assistance Program analysis based on the results of the assessment per the DOE 440.1-8, "Implementation Guide for use with 10 Code of Federal Regulations (CFR) 851." The four elements of the assessment were:

- A review of past assessments conducted by DOE, the Hanford Concerns Council (HCC) – expert panel, the CH2M HILL Hanford Group, Inc. (CH2M HILL) IH Program Health/Analysis presentation to the Executive Safety Review Board (September 25, 2008), WRPS "Industrial Hygiene Safety Management Program Plan-Management Assessment" - 0900116, the WRPS Fact Finding for 702AZ Condensate Drained from Ventilation Duct on December 17, 2008, Report NO. 2008-025; and the National Institute for Occupational Safety and Health (NIOSH), "Health Hazard Evaluation Report 2004-0145-2941;"

- A review and assessment of all available WRPS IH related documents which are generated or owned by the WRPS Environmental Safety, Health, and Quality (ESH&Q) division, plus select and pertinent tertiary documents that are referenced with the IH program documents;

- An evaluation of the IH personnel qualifications by way of a review of staff qualifications cards and through small group interviews of as many staff members as feasible; and

- A series of meetings with the WRPS IH manager and associated review of WRPS IH management records, data bases, and reports that reflect the current level of effort associated with IH treads analysis, program metrics, program planning, budgeting, staffing, self-assessments, and associated corrective actions.

3.0 DISCUSSION

Due to the relatively broad spectrum of the "Industrial Hygiene Technical Basis Assessment Phase I" scope of work; this section is simplified by being organized by the four basic elements, as follows: Review of Past IH Assessments; Document Review; Staff Qualifications; and Program Management. Each of these subsections refers to attachments, which provide specific methods and results or data points. Appendix A is a checklist generated from the performance evaluation criteria, as they pertain to the four primary assessment elements.

3.1 Past Tank Farm IH Assessments

A number of assessments, including two major third-party assessments have been performed on the chemical exposure elements of the Tank Farm IH program, over the last seven years. The two major assessments reviewed include the NIOSH "Health Hazard Evaluation Report 2004-0145-2941," released in July 2004 and the HCC commissioned report by an expert panel, entitled "The Industrial Hygiene Chemical Vapor Technical Basis," dated June 2008. These documents were reviewed to ascertain the historical concerns of the past contractor's program. One management assessment of the IH program was conducted by WRPS, since accepting operations on October 1, 2008, and in addition, ORP surveillance of WRPS response to an abnormal event, included some IH elements.

Under the current WRPS management assessment process, internal staff, including subcontractor personnel, perform an evaluation of the WRPS IH program, submit the results to the IH Program Manager and enter results into the Problem Evaluation Request system for tracking corrective actions. The results of the management assessment (WRPS-0900116, "Industrial Hygiene Safety Management Program Plan-Management Assessment," dated January 19, 2009) indicated four areas in need of improvement, improve an element of heat stress monitoring in a particular survey, maintaining procedures not used on a regular basis, issues on Right-to-Know Stations, and hierarchy of controls required by 10 CFR 851. The WRPS management assessment appears to be comprehensive in nature and some of the observations noted by WRPS are consistent with the ORP Assessment Team's observations, including the issue of some procedures not being updated since the implementation of 10 CFR 851 and deficiencies in the Personal Protective Equipment (PPE) selection process.

There are no WRPS assessments of IH practices during off normal events, other than a fact finding report at this time. The "ORP Management Concern S-09-ESQ-TANKFARM-003 WRPS Response to Abnormal Events" report was in draft form at the time of this assessment. However, it is of value to this assessment, as it provides direction in the review of IH procedures, relative to the chemical exposure risk assessment process, the documented process for selection and use of PPE, post event communications with the Hanford medical provider, selection and use of air monitoring instruments, and identification of exposure source materials.

The tank farm contractor transition briefing entitled "Industrial Hygiene Program Health/Analysis" dated September 25, 2008, provided only minimal amount of performance metrics of the IH program. Having an adequate set of metrics is needed since the overall goal of an IH program is the prevention of occupational disease, illnesses, and disorders that impact the health of workers; interfere with operational stability; and negatively impact the comfort and morale of personnel. As such, metrics that allow for the measurement and tracking of adverse impacts are necessary for the correction of causative factors in meeting this goal. Compliance with standards such as Threshold Limit Values (TLV) is a mandatory, secondary objective that assists in meeting this goal. Effort should be provided in developing leading indicators as much as possible.

3.2 Document Review

3.2.1 General

The Assessment Team reviewed over 80 WRPS IH related procedures, fact sheets, supporting documents, or sets of documents in the course of the assessment. They were comprised of top tier health and safety and IH management plans, staff qualifications plans and requirements, technical directives, quality assurance directives, operational procedures, performance tracking documents, an exposure monitoring data base, and WRPS web page based hazard communication resources. Appendix A of this assessment contains a list of those documents and observations associated with each document, as warranted.

The collective set of programmatic documents address a cadre of preventative medicine elements including hearing conservation, ergonomics, heat and cold stress, illumination, blood borne pathogens and others addressed in Appendix A. Of these elements, the thrust of the program is dedicated to the evaluation and control of chemical exposures. The chemical monitoring and control aspects of the written programs contain some excellent, advanced level efforts that have been developed as part of the technical basis for the understanding and control of chemical exposure associated with the waste constituents. Documents pertaining to the characterization of tank headspace vapors, personnel exposure sampling results, occupational exposure limits and liquid chemical constituents form the technical basis which serves as baseline risk assessments for the decision logic that follows in procedural documents. In addition, there are documents which provide very specific directions on IH monitoring, procedural processes, PPE, and administrative controls. Many of these documents at the secondary and tertiary levels are highly instructive and self-explanatory.

However, there are four general observations germane to a number of IH related procedures, one of which was also self-identified by WRPS. They are:

- The first is a lack of written core decision logic, which results in excessive deference to an IH professional judgment approach;

- Secondly, the collective state of the programmatic elements are very voluminous, somewhat contradictory (see "Example of Concern" on next page) and difficult to interpret at the implementation level. Both manifestations of the program may be cause for confusion and have a negative impact on the functionality and credibility of the program as a whole, particularly from interested parties not involved in the day-to-day IH operations.

- In addition, a sub-set of programmatic IH procedures pre-dated 2005 should have been revised to include as required by 10 CFR 851.23(a)(9) American Conference of Governmental Industrial Hygienists (ACGIH), "Threshold Limit Values for Chemical Substances and Physical Agents and Biological Exposure Indices," 2005 referenced

TLVs when they are lower (more protective) than permissible exposure limits found in 29 CFR 1910. For example, TFC-ESHQ-IH-STD-06, "Hearing Conservation Program," Revision A, dated October 28, 2004, was not revised to include the 2005 TLV, it should be noted the actual TLV in this case was not revised in 2005 it remains, 85 decibels, A-weighting scale [dBA] 8-hr Time Weighted Average;

- Communications between WRPS and AdvanceMed Hanford regarding medical surveillance, is not well defined. Medical surveillance stipulated for either pre-placement or annual exams typically do not provide the medical surveillance requirements to be met by the occupational medical contractor or in the absence of this information feedback – verification that the requirements were met before placement or continued placement. For example, 29 CFR 1910.1001(I), "Medical Surveillance" requires a specific pre-placement examination before an employee can be designated as an asbestos worker but TFC-ESHQ-IH-STD-04, "Asbestos Control – Facility Management/General Industry" does not document how these pre-placement requirements are transmitted to the occupational medical office or verified to have been met before placement;

- Lastly, the programmatic goals fail to address the requirement for monitoring and controlling chemical exposures to As Low As Reasonably Achievable (ALARA), below the Occupational Exposure Limits (OEL). The existing written goal of maintaining exposures below 50% of the OELs is not consistent with the requirements stipulated in DOE Orders, nor with the ACGIH, 2005 TLV booklet, incorporated into 10 CFR 851. The application of an ALARA goal is not only mandated, but is of particular significance to the health and safety of workers who deal with a vast mixture of chemicals, of unknown cumulative toxicological effects. In addition, there is no written consideration of the margin of sampling error associated with the existing sample collection and analysis utilized, nor for the use of Direct Reading Instruments (DRI) to monitor for short term exposure limits.

  Example of Concern:

  TFC-ESHQ-S-IS-C-02-RevB-12 (February 2008) states: "Some of the chemicals in tank waste and condensate can damage the skin, irritate the skin, or be absorbed through the skin"

  RPP-34147, Revision 0 (June 2007) states as the last statement of the conclusions: "Therefore, dermal exposure hazards from tank waste is extremely low and requires no additional Controls"

  Fact Sheet EH-0607 (October 2007) "Dermal Protection from Tank Waste, Condensate and Tank Vapors" refers to RPP-34147 for direction, suggesting (but unclear) that neither silver shield® Chemical Protective Clothing (CPC) or any other designated CPC is warranted for Tank Farms Operations at the listed tank sites.

3.2.2 Lack of Clear, Consolidated Information

WRPS maintains a hierarchy of programmatic documents, which flow down from general, to more specific information and directives. ORP recognizes that such a process is necessary due to the voluminous nature of the materials. However, the process, which has evolved out of response to needs, is cumbersome and sometimes lacks clarity in an end result. As an example, a key document is the "Tank Operations Contractor Health and Safety Plan." Normally, such a plan contains necessary instructions to workers as a standalone, pragmatic document which addresses eight fundamental subjects, mandated in 29 CFR 1910.120 (P). The sections of the WRPS document that address IH subject matter, collectively refer to 32 links necessary to understand the basic components, which in turn refer to over 200 secondary links. The difficulties in locating and extracting specific, operational IH information were reflected by Industrial Hygiene Technicians (IHT) during a small group interview. Yet the documents as a whole, fail to adequately address three of the eight mandated items. The subjects that are absent or deficient are: 1) Medical Surveillance; 2) New Technologies Program; and 3) Emergency Response, including PPE.

Example: INDUSTRIAL HYGIENE INSTRUMENTATION PLAN, TFC-PLN-64, REVISION B-1, summarizes the selection of DRIs as a skill of IH Professional decision as follows: "Instruments will be selected by the project Industrial Hygienist (IH) as part of the development of the sampling/monitoring plan and will be based on the hazard to be measured"

Another confusing element pertains to the "IH Exposure Assessment Strategy" (TFC-PLN-34, Revision D-2), which discusses Short Term Exposure Limits (STEL) Plan and Ceiling Limits, but is non-specific in the application to the strategy. A sub-section in Appendix B of the plan, states: "Ceiling limits are generally airborne concentrations which should never be exceeded...Certain chemicals have STELs or ceiling limits that have unique sample duration periods. Averaging times for the TF COPCs are listed in Appendix B." However, no further instruction is provided in Appendix B. (Note: this section is referenced as being adapted from the American Industrial Hygiene Association (AIHA) 1998, Leidel 1977, and ACGIH. It appears that the supporting appendices were not included in the WRPS plan.)

3.1.1 Personal Protective Equipment Decision Logic

A key element within the WRPS programmatic directives, which lacks reproducible methodology is that required for the selection of PPE. Although there are a number of good documents describing Chemicals of Potential Concern (COPC) and individual considerations of selection, there is no indication as to what PPE is available onsite; and neither a process nor a defensible, pre determined selection of PPE, which can be consistently utilized by the IH Staff.

3.2.3.1 Chemical Protective Clothing and Chemical Eye Protection

A review of documents related to PPE discuss tank waste chemical constituents relative to dermal exposure, but fall short of a discussion of the specific selection of CPC and eye protection associated with the toxicants of the waste and a pH of 13 (highly corrosive). In addition, there is no consideration of precautionary measures for such off normal effects as a splash involving a high body surface area, and/or the eyes. The "Personal Protective Equipment" TFC-ESHQ-S-C-02 is the baseline directive for the selection of chemical protective clothing and eye protection, yet the section on eye protection is limited to safety glasses for impact protection only. The CPC and glove section of The "Industrial Hygiene Exposure Assessment Strategy" TFC-PLN-34 D-2, refers to this document for direction on skin protection. A supporting document, the "Tank Waste Dermal Exposure Assessment" RPP-34147, serves as an extensive study of potential chemical absorption and justification for not issuing Silver Shield® or 4H® gloves for stipulated tank farms. However, each of the documents fail to address the following significant items:

- Protection from skin burns or dermatitis due to chemical contact of the hands;
- Protection from skin burns or large surface area chemical absorptions, from a large scale splash;
- the health impacts and protection of the eyes associated with liquid splash; and
- the documents collectively fail to provide a pre-determined decision or a clear decision process for the selection and service life of CPC. Such common considerations associated with multiple chemical breakthrough times, permeation rates, and degradation of various materials used in the selection and use of CPC is absent.

> **Note:** TFC-ESHQ-S-IS-C, Rev B-12 (PPE), Section 6.3.1 states that ***some chemicals in tank waste and tank condensate can damage the skin, irritate, or be absorbed by the skin and to consult IH in the work planning process.***

The IH technical basis requires CPC decision logic and methodologies. The level of effort necessary to fill in the gaps is potentially minor, but significant to the process.

3.2.3.2 Respiratory Protective Equipment

The Tank Operations Contractor Health and Safety Plan states the following:

"Personal protective equipment includes use of respiratory protection approved by Industrial Hygiene, either as specified in job procedures, Tank Vapor Information

Sheets, or job hazard analyses or through voluntary use even though not required for compliance with the occupational exposure limit."

In addition, the WRPS Respiratory Protection Plan is a 54-page document, of which two pages of text and a single page figure are provided on the subject of respirator selection. The information provided, is in general terms and includes a statement that **"Specific guidance for respirator selection is available from NIOSH and OSHA."** Neither document provides specific information that is relevant to what respirator options are available to WRPS, the applicability of respirator cartridges to various COPCs, including carcinogens or mixed contaminant considerations; and those respirator ensembles that are not approved for specific applications, such as an acid gas cartridge is not approved for nitric acid nor hydrogen sulfide gas. No other documents were observed to address the decision logic for consistent decision making by IHs throughout the program.

During the course of interviews one IH professional discussed a recent event, in which a small quantity of methylene chloride was spilled and the IH was tasked with taking photos of the spill scene. The IH professional judged the exposure was below the TLV for methylene chloride, but utilized respiratory protective equipment on a voluntary basis. The respirator selected for the task was a Powered Air Purifying Respirator (PAPR) with (presumably) an organic vapor cartridge. The use of a PAPR was made in error, on two accounts: 1) PAPR is not approved for methylene chloride by manufacturers due to poor adsorption to activated carbon; and 2) Occupational Safety and Health Administration (OSHA) specifically mandates the use of supplied air respirators for potential exposure to methylene chloride vapors exceeds the Permissible Exposure Limit (PEL) or STEL (29 CFR 1910.1052(g)). In addition, there was no documented effort to perform a simple ventilation calculation to document the PEL or STEL was not exceeded. The professional judgment exercised in this situation demonstrates a potential outcome associated with the lack of written selection protocols and directions. Additionally, there is no common mode of documentation on the selection process of respiratory protection by the IH Professional. This in turn, leads to the inability of a technical peer review and a single point error for the respiratory selection process. Professional judgment alone is an insufficient technical basis for the selection of respiratory protection. WRPS must identify decision logic for unilateral application at tank farms.

3.2.4 Clarification of DRI Applications and Decision Logic

There are excellent documents within the WRPS program, which describe the use and calibration of IH instruments and a significant amount of data available for the characterization of COPCs. However, there is an absence of written directives or fact sheets that specifically demonstrate the applicability of some DRIs relative to what is being surveyed in sampling plans and the basis for turn back values. There are also tables which list the COPCs and the appropriate instrument or reference to a pump or SUMA® method, however, there is no summary for such operational and interpretative needs as the detection limits for the DRIs, cross sensitivity & correction factors, the range

relative to the COPCs and therefore, what determines a DRI action level. This absence of standardized criteria was reflected in an interview with IHTs, as inconsistencies in the assignment of DRIs for similar operations by different IHs. The following example indicates a failure associated with the absence of decision logic:

Example: Tank Farm Work Instruction WDL#111243, dated December 12, 2008, calls for the monitoring of organic and ammonia vapor, yet provides action levels for the described task as follows:

- Organic Vapors 2 ppm
- Ammonia 12 ppm
- Formaldehyde 0.2 ppm

The following failures occurred:

1. Formaldehyde cannot be detected by the prescribed instruments*.
2. Formaldehyde, by virtue of multiple toxicological risks, including carcinogenicity, irritation, and pulmonary sensitization, is a priority COPC, as evidenced by the lowest OEL.
3. Yet, the document fails to identify that the formaldehyde OEL is a ceiling value, meaning that an exposure of 0.3 ppm is not to be exceeded. This is a contradiction to the WRPS IH Exposure Assessment Plan (3.11) that mandates screening COPCs and controlling exposure to below 50% of the OEL. Not only is the action level above 50%, these action levels are intended for time weighted average exposures – not ceiling limits, which could instantaneously be exceeded.

*ORP confirmed that formaldehyde is a not COPC to be monitored at this location per the TVIS, and reference was mistakenly made on this work instruction.

ORP confirmed that formaldehyde is not a COPC to be monitored at this location, per RPP-RPT-29262, A-Prefix Tank Farms Vapor Hazard Characterization Report, Revision 0 and this reference was a quality assurance error on the work instruction, not a technical omission.

The WRPS IH technical basis does not offer a clear, documented decision logic and justification for utilizing or not utilizing DRIs for assessing possible excursions of exposure above baseline personal exposure data, as stated in Section 3.11 of TFC-PLN-34, Revision D-2, "IH Exposure Assessment Strategy." This plan does identify in Attachment E, a series of factors to be considered in the establishment of DRI action limits, and states: "The Safety and Health Director will review current screening action levels for appropriate conservatism," - a reference to professional judgement. Therefore, in the absence of decision logic, a review was conducted of the flow down of documents on this subject, which included the Tank Farm Chemical Exposure Hazard Analysis (series of reports), Tank Farms Vapor Characterization Report (series), Management of Vapor Control Zones, Instrumentation instructional documents (series), Fact Sheet:

"Monitoring for COPCs in the Tank Farm," and representative IH Monitoring and Sampling Plans, and Work Hazard Analysis documents. Questions that remain, would then include: Which Volatile Organic Compounds (VOC) are detected within the range and sensitivity of a 10.6 ev Photo Ionization Detector and which are not? When is a flame ionization detector then used and for what sub section of the COPCs? What common non VOCs such as N-Nitrosomethylethylamine, nitrous oxide, and mercury are not being monitored and why not? Are correction factors applied to combustible gas indicators calibrated with isopentane, but used primarily for hydrogen monitoring? What are the margins of error and interfering compounds to be considered for use of DRIs? These elements of the IH Exposure Assessment strategy appear to be absent. ORP recognizes that DRIs are an important element of the overall strategy, and that there are limitations in their application; however, the process of determining the use, limitations, and associated applications must be documented, to support designated use.

Formaldehyde has a ceiling value (not to be exceeded) of 3 ppm, but a WRPS action level of 2 ppm. The accuracy of the detector tube may range from +/- 35% to +/- 50%, which indicates that ceilings could be exceeded before actions are initiated. In addition, detector tubes are cumbersome, time consuming to operate, and difficult to read. The logistics of the DRI sampling and the margin of error suggest that either the action level or the mode of DRI sampling may not have been subjected to the same decision logic as other COPCs, indicating inconsistency.

3.3 STAFF QUALIFICATIONS

WRPS has an extensive staff of 54 IH professionals, which includes 3 managers (of which one is certified in IH), 9 industrial hygienists (of which 5 are certified in IH) and 32 IHTs, who are represented under the collective bargaining agreement.

There are qualifications standards which identify baseline requirements and responsibilities for IH Professional (TFC-BSM-TQ-STD-01, "Technical Staff Qualification Requirements") and IHT (TFC-BSM-TQ-STD-07, "Industrial Hygiene Technician Training and Qualification Requirements.") In addition, WRPS maintains both IH and IHT qualification cards (350882, "Qualification Card for Industrial Hygiene Professional," Revision 0804.1 and 350292, "Qualification Card for TOC Industrial Hygiene Technician," Revision 0608.1). The process does not separately address specialty positions such as the IHT Lead nor does it address any special requirements for the IHT responsible for being the IH equipment custodian or respiratory protective equipment custodian.

The IH professional qualifications standard and process is relatively rigorous. The IH professional qualification process is primarily directed at having a Bachelors degree in IH or related science, two years of IH experience and one year of IH experience in the nuclear industry or equivalency; plus extensive required reading, self-study and procedural

orientation. The IH professional is required to obtain 24 hours of continuing education per year. A majority of the IH professionals on staff hold current certifications through the American Board of Industrial Hygiene (ABIH). A sample review of completed IH professional qualification card was not part of the scope of Phase I of the assessment.

The IHT qualification process requires an Associate Degree in safety and health technology, applied science or related science, one year job related experience or equivalent combination of education and experience plus extensive in-house training on fundamentals and instrumentation. The IHT process does include hands on training in the classroom and periodic updates on seldom used instruments. Sample observations of IHT process qualification or requalification was not part of this assessment, but will be part of the Phase II assessment.

Feedback from group interviews involving 31 of the 54 IH professional staff found them to be very aware of the Tank Farm IH issues. The majority of the IH professionals on staff have extensive commercial and DOE Complex experience in the subject areas of the assessment. The IH professional staff was very open and provided their candid professional opinion of the current WRPS IH program and areas for possible improvement (e.g., training). A common questioned asked by the Assessor's during the interviews were on the subject of level of effort expended on tank farm vapor sampling – over board, too little or just right. The consensus was that the vapor sampling was larger then should be in relationship to the commercial industry but it was understood and accepted. The morale of the IH Professional staff seems to be holding up during the last few years both CH2M HILL/WRPS have been able to maintain a high level IH staff (it should be noted a current WRPS employee is going to take part one of the ABIH certification process this coming June). There was common consensus among the WRPS IH professional staff that there is generally room for improvement of the program but no other portion of the IH program is Less Than Adequate due to the attention being given to the Tank Farm vapor issue. Another common question asked by the Assessor's during the interviews was in regards to the nature of interface or projects which ally the fear of workers and result in a prudent level of risk information regarding Tank Farm vapor issues; for which several interfaces were described including the Chemical Vapor Solutions Team, Presidents Council, and Chemical Hazard Awareness Training. However, it appears a sustained effort to provide risk information to workers about historical and ongoing sampling results, including IH instrument capabilities and limits in relation to the radiological instrumentation has not been accomplished.

The control of IHT field data forms, Chain of Custody (COC), conveyance to IH records, management of sampling data, and distribution of employee occupational exposure notification is controlled by TFC-ESHQ-S_IH-C-46, "Industrial Hygiene Reporting and Records Management," Revision B-1. The electronic record copy of sampling is maintained on the Tank Farm Industrial Hygiene (TFIH) database from transposed field notes and backed up every evening on hard drive. During discussions with the first group of IHT it was very clear they understood the rules of COC. The ORP field observations of sampling taken by IHTs and conveyance of the sample media through processing and records management will be a portion of the Phase II assessment. Interviews with the WRPS personnel responsible for maintaining the TFIH database appear to be well versed in the capability of

TFIH database and associated software. The TFIH database software is currently maintained by Lockheed Martin Services, Inc.

A majority of the IHT have at least five or more years experience working as IHT in Tank Farms or at the Hanford Site. Based on interviews the IHTs who have responsibility as the IH equipment custodian and respiratory expert have extensive knowledge (both have over 20 years Hanford experience) of their respective fields and were able to discuss in adequate detail technical subjects of their respective assigned job areas. One follow up question to WRPS management was on the succession planning in case either IHT decides to retire, the feedback provided was that the respiratory protection program is well covered but given the technical complexity of the IH equipment custodian duties, there were succession issues which are being actively pursued. The Field IHTs appear to have an adequate understanding of the basics of the most commonly used IH instruments. Based on response to questions, the IHT provided a mixed response to the ease of use of IH procedures and sampling plans, on occasion a work pause was needed for clarification. Another common theme among the IHT, was there was different responses based on the same vapor hazard between Base Operations, Single-Shell Tank (SST) Retrieval, and Closure, including the area of down posting a Vapor Control Zone. Not all IH sampling plans require personnel monitoring/sampling in the absence of it being mandated as part of the work task. There is a general reluctance for worker's to wear the sampling apparatus on a voluntary basis, as there is a complaint of it being cumbersome.

3.4 Program Management

The WRPS IH Management efforts address a cadre of departmental elements such as staff training, budgeting, data management, quality assurance, scheduling, review and updating of written programs, and strategic planning. WRPS IH program management is centered within the ESH&Q group of WRPS, although the majority of IH personnel are deployed to Base Operations or SST Retrieval and Closure for operational support. The IH program manager is a Certified Industrial Hygienist and responsible for central functions such as program metrics, data management, technical basis risk assessments, and primary procedural components.

3.4.1 Goals, Metrics and Trends Analysis

The current state of the sample data is relatively unprocessed, other than through the tracking of constituent results above the 10% and 50% OEL status for existing COPCs. However, WRPS is currently in the process of re-assessing the baseline data acquired. As part of this effort, they are planning the consolidation of the data, in a manner which allows for the assessment of both the statistical approach to be used in a re-characterization of potential exposures and in the identification of data gaps. This effort will in turn, drive the number and location of additional screening and routine monitoring efforts. The methodology will reportedly be developed in conjunction with an independent expert IH panel.

There is an ongoing effort to consolidate data and assimilate upward or downward trends in other IH program elements such as hearing conservation, non-ionizing radiation, heat stress, cold stress, and ergonomics. It is noteworthy that WRPS IH managers and staff appear to agree per interviews, that the vapor control program has monopolized their resources and there is some frustration that: 1) they have exceeded industry standards in addressing the concern; 2) there is no serious vapor health threat; and 3) other programmatic areas of need are not being addressed as they would prefer.

Example of WRPS Sampling Strategy under consideration

Frequency of sampling (low-high)

Carcinogen	H	H	H
Highly Toxic	M	H	H
Irritant	L	M	H

% of OEL----------›

3.4.2 The Role of Professional Judgment

WRPS points out that it maintains a high caliber of staff and that professional judgment is a necessary element to the program. In the factual accuracy response, WRPS states: "The American Conference of Governmental Industrial Hygienists and the American Board of Industrial Hygiene both recognize that professional industrial hygienists must evaluate data and information and make professional judgments."

ORP recognizes not only the value, but the necessity of professional judgment - particularly in the event of off normal operations. Such judgments is based not only on training and experience, but also on baseline programmatic guidelines that have been reviewed, approved, and incorporated into the programmatic foundation of the health and safety program. It is neither feasible nor desirable to attempt to dictate directives for variables that occur with environmental and operational dynamics. However, the fundamental methods in which decisions will be made, in a consistent, defensible mode is essential to the credibility of the program. As an example, NIOSH, arguably the international subject matter expert on respiratory devices devotes 41 pages to the process

of respirator selection in the "NIOSH Guide to Industrial Respiratory Protection." A professional judgment is required in the understanding and application of this document. However, the narratives, checklists and flow charts are provided to "insure uniformity and adherence" to established methods established jointly by NIOSH and the Occupational Safety and Health Administration (OSHA). Similar guides, established as industry standards are available for the selection of CPC, eye protection and other PPE elements. All of these guides require professional judgment in the application process, with respect to the vast mixture of COPCs and environmental conditions. What is missing from WRPS is clearly stated policies with respect to: 1) the need; 2) the application; 3) WRPS inventory or options available; and 4) standard methods for decision making.

ORP acknowledges that WRPS has some elements of the selection process incorporated into programmatic documents, such as a discussion of the service life of respirator cartridges and an extensive study on the application of silver shield® gloves and mercury exposure. Yet, there are major elements missing and most importantly, no standard means of directing the use of those elements in a cohesive fashion, and there is no defined process for documenting the basis for the decisions made in the absence of standard methodologies.

The same is true with respect to broad range DRIs. Table 1 of the "Monitoring for COPC in Tank Farm Vapors" list instruments that respond to multiple COPCs, but does not address the means of discriminating amongst those with very low TLVs and those that have high TLVs. There appears to be a mandate for utilizing detector tubes for some, and broad range instruments such as the TVA and ppbRAE for others. Some COPCs appear to be monitored by either option. The argument of utilizing professional judgments for the selection of instruments is only defensible, in the presence of a sound technical basis, which provides each IH with the pre determined range, sensitivity, correction factors and unknowns associated with the DRI table. To assume that each IH has performed this task independently in a correct, consistent manner and maintains the basis for the decision logic is not prudent. In addition, there is no evidence to suggest that such factors and thought process, are in turn, documented with each work instruction or operational document.

The level of effort required to either: 1) provide pre established decisions for PPE and DRIs for the waste and condensate per Tank farm; or 2) to provide decision logic directly, with the aid of internet links is minimal. To have this fundamental element absent from both a written PPE plan and sampling strategy plan is not the industry norm.

4.0 CONCLUSIONS

4.1 Positive observations and trends

- The breadth and detail of most programmatic WRPS IH documents is very good.
- The effort on evaluating baseline chemical hazards has been very advanced.

- The program for control, conveyance, and management of sampling data appears to be exceptional.

- The WRPS Staff offers considerable experience, held to high qualification standards, self-confident and professional.

- The WRPS IH related instrumentation, data base, and overall resources are exceptional.

- WRPS is upgrading risk communication process, including the use of outside subject matter experts.

- WRPS is pro actively supporting an independent panel for additional vapor monitoring and control considerations.

- WRPS is reportedly improving worker access to material safety data sheets through the establishment of an electronic on-line Material Safety Data Sheets program. This action appears to be prompted by two observations that result from the WRPS self-assessment, finalized on January 19, 2009.

4.2 Opportunities for Improvement

- The compendium of IH Information and directives could be consolidated for IH and workers, in a manner more easily acquired and understood.

- WRPS should incorporate exposure characterization and control goals and objectives into the IH technical basis.

- WRPS should define the range for professional judgment within the IH program to a reasonable extent within the technical basis documents.

- WRPS should review and evaluate worker occupational illness reporting as an element of the hazard identification and assessment process, per 10 CFR 851.21(7) and 10 CFR 851.26 94)(b). The consideration of reported target organ or systemic effects and related causative agents within the tank farm may be an important added element of the IH strategy. The overall goal of the compliance with this requirement being the evaluation of reports in a manner which allows reconsideration of the effectiveness of current protective measures with regards to the monitoring and control strategy. For example, in the event that asthma and related reactive airways disease is identified as a complaint of tank farm workers and recognizing that formaldehyde [a COPC] has a causal link to asthma, special consideration may then be directed at increasing the nature and frequency of formaldehyde monitoring.

4.3 Assessment Follow-up Items

As part of a future assessment (Phase II), actual field implementation of the documented WRPS IH program will be evaluated with special emphasis on:

- Observations of IH Technicians going through re-qualification or initial qualification, actual sampling (source, personnel, or area) and processing of sample media for laboratory analysis and execution of the Work Instructions/Job Hazard Analysis (TFC-ESHQ-S_SAF-C-02, "Job Hazard Analysis," Revision D-5). The IH Professionals qualification card process consists mostly of required reading with some actual case studies like assigning DRIs and sample data analysis.

- Per several months of observation, formal interviews, and review of one off-normal event (702-AZ); there is a general concern that the prevailing opinion within the WRPS IH department, that Tank Farm static chemical vapor and condensate exposures are fully characterized and controlled, is having negative impacts the degree of WRPS vigilance in anticipating, preparing for, and responding to off-normal events and secondarily, assessments of new or improved control measures. As part of Phase II the assessors will perform field assessment of drills for off-normal waste release and actual should any should occur.

- The process of decision making in regards to PPE and instrumentation shall be closely evaluated.

- The monitoring, controls and associated documentation of off-normal event decision making.

- The effectiveness of the sample and data quality assurance process.

- The nature of the safety culture within WRPS.

5.0 FINDINGS AND OBSERVATIONS

5.1 Findings

A-09-ESQ-TANKFARM-001-F01: Contrary to requirements WRPS has not established and implemented programmatic procedures which evaluate and introduce new technologies into the WRPS ESH&Q Assurance group, nor IH program. WRPS has clear evidence that portions have been made, such as the addition of upgraded IH instrumentation. A formal and concerted effort to periodically evaluate new technologies for worker health and safety is an important, but missing feature of this high end health and safety program.

Requirements:

29 CFR 1910.120(p)(5), "New Technology Program" The employer shall develop and implement procedures meeting the requirements of paragraph (o) of this section for introducing new and innovative equipment into the workplace.

1910.120(o)(1): The employer shall develop and implement procedures for the introduction of effective new technologies and equipment developed for the improved protection of employees working with hazardous waste clean-up operations, and the same shall be implemented as part of the site safety and health program to assure that employee protection is being maintained.

1910.120(o)(2): New technologies, equipment, or control measures available to the industry, such as the use of foams, absorbents, neutralizers, or other means to suppress the level of air contaminants while excavating the site or for spill control, shall be evaluated by employers or their representatives. Such an evaluation shall be done to determine the effectiveness of the new methods, materials, or equipment before implementing their use on a large scale for enhancing employee protection. Information and data from manufacturers or suppliers may be used as part of the employer's evaluation effort. Such evaluations shall be made available to OSHA upon request.

Discussion:

WRPS has not established and implemented programmatic procedures which evaluate and introduce new technologies into the WRPS ESH&Q Assurance group, nor IH program. There is clear evidence efforts have been made, such as the addition of upgraded IH instrumentation. However, given the history of the tank farm vapor exposure monitoring & controls challenges and the history of abnormal events, a formal and concerted effort to periodically evaluate new technologies for worker health and safety is an important, but missing feature of this high end health and safety program.

A-09-ESQ-TANKFARM-001-F02: Contrary to requirements WRPS has not established written, comprehensive decision logic for the selection and use of PPE. WRPS has developed risk assessment documents, as well as a respiratory protection plan and PPE plan. However, there are no defined action levels and selection criteria available for review for respiratory protective equipment, CPC, nor chemical protection of the eyes; and there is no element that addresses the selection process or protocol of use for an emergency response.

Requirements:

29 CFR 1910.132(d): Hazard assessment and equipment selection.

29 CFR 1910.132(d)(1): The employer shall assess the workplace to determine if hazards are present, or are likely to be present, which necessitate the use of PPE. If such hazards are present, or likely to be present, the employer shall:

29 CFR 1910.132(d)(1)(i): Select, and have each affected employee use, the types of PPE that will protect the affected employee from the hazards identified in the hazard assessment;

29 CFR 1910.132(d)(1)(ii): Communicate selection decisions to each affected employee;

29 CFR 1910.132(d)(2): The employer shall verify that the required workplace hazard assessment has been performed through a written certification that identifies the workplace evaluated; the person certifying that the evaluation has been performed; the date(s) of the hazard assessment; and, which identifies the document as a certification of hazard assessment.

29 CFR 1910.134(c) (1): In any workplace where respirators are necessary to protect the health of the employee or whenever respirators are required by the employer, the employer shall establish and implement a written respiratory protection program with worksite-specific procedures... The employer shall include in the program the following provisions of this section, as applicable:

29 CFR 1910.134(c)(1)(i): Procedures for selecting respirators for use in the workplace;

29 CFR 1910.120(p)(8): Elements of an emergency response plan. The employer shall develop an emergency response plan for emergencies which shall address, as a minimum, the following areas to the extent that they are not addressed in any specific program required in this paragraph.

29 CFR 1910.120(p)(8)(ii)(K): PPE and emergency equipment (other items not included).

Discussion:

WRPS has developed risk assessment documents, as well as a respiratory protection plan and PPE plan. However, there are no defined action levels and selection criteria available for review for respiratory protective equipment, CPC, nor chemical protection of the eyes; and there is no element that addresses the selection process or protocol of use for an emergency response. In addition, there is an absence of service life criteria for CPC. The absence of a decision process or a documented, designated CPC material extends beyond the chemical oriented elements of the program and includes a deficiency in the Bloodborne Pathogen Exposure Control Plan. These items are of the most basic type of information to be made available to workers through the written safety and health program. A number of IH documents make reference to consulting the IH, deferring to the IH "professional judgment."

A-09-ESQ-TANKFARM-001-F03: There is a lack of specified criteria in the selection of direct reading air monitoring instrumentation and interpretation of results. There is an absence of specific methodology on the selection and interpretation of nine or more different DRI used to monitor for the acute hazard of COPC. Such DRI warrant both clear decision logic for selection and instructions of interpretation relative to other instrument readings. The results associated with the lack of written guidance and criteria was manifested in the WRPS response to the 222-S methylene chloride spill, in which the 10.6 ev Photoionoization

detector was used in error, as the basis for the release of the work area. The manufacturer's literature clearly identifies that this instrument does not detect a chemical such as methylene chloride, which has an ionization potential higher than 10.6 ev.

Requirement:

10 CFR 851.21, "Hazard Identification and Assessment"

(a) Contractors must establish procedures to identify existing and potential workplace hazards and assess the risk of associated workers injury and illness. Procedures must include methods to: Assess worker exposure to chemical, physical, biological, or safety workplace hazards through appropriate workplace monitoring;

Discussion:

Despite considerable attention to COPC, air monitoring strategies, and instrument operation, there is an absence of specific methodology for the selection and interpretation of the nine or more different DRI used to monitor for the acute hazard COPC (as listed in EH-06-004). Selection and data interpretation of some DRI such as the use of the iTX ammonia meter for ammonia measurement is self-evident. However, other DRI such as the ppbRAE, the Miran 205B, and the TVA-1000 respond to multiple chemicals at different sensitivities and react to multiple interfering compounds. Such DRI warrant both clear decision logic for selection and instructions of interpretation, relative to other instrument readings. In addition, there is no direction provided for the use of detector tubes with regard to the same. Such reliance on "Professional Judgment," at this significant level of decision making creates the potential for errors, departmental inconsistency, an absence of written documentation, and an inability to audit program performance against standardized procedures.

A-09-ESQ-TANKFARM-001-F04: There is an absence of written direction to incorporate the mandated goal of reducing worker exposure to carcinogens and all chemicals to levels ALARA, below the TLV.

Requirements:

10 CFR 851, 10 CFR 851.21, and 10 CFR 851.23 The 2005 ACGIH TLV booklet states "...carcinogens, worker exposure by all routes should be carefully controlled to levels as low as possible, below the TLV"

10 CFR 851.21(4), "Hazard Identification and Abatement," that the "contractor must analyze designs of new facilities and modifications to existing facilities and equipment for potential workplace hazards" and 10 CFR 851.22, "Hazard Prevention and Abatement," contractors must establish and implement a hazard prevention and abatement to ensure...

DOE Standard 1189-2008, "Integration of Safety into the Design Process" – Section 7.10, "Hazardous Material," similar to radiological hazards, DOE requirements invoke an ALARA concept for the protection of workers from hazardous materials. Design should support the

primary objective of reducing the frequency, severity, and cost of incidents involving hazardous material, as well as the cost of hazardous operations. Prevention practices, such as substitution of less hazardous materials in a project or design of a process to reduce generations of hazardous waste, should be examined prior to consideration of protection strategies. Protection strategies will generally involve confinement strategies, such a gloveboxes, piped systems, and tanks, as well as administrative controls. The approach will typically be driven by the magnitude of the hazard and inventory. Similar to radiological hazards, DOE requirements invoke an ALARA concept for the protection of workers from hazardous materials.

DOE-STD-3009-94, "Preparation Guide for U.S. Department of Energy Non-Reactor Nuclear Facility Documented Safety Analyses," Chapter 8, "Hazardous Material Protection"

8.4 ALARA POLICY AND PROGRAM (DOE-3009-94)

This section summarizes the ALARA policy and program for the facility. Historically, hazardous materials, unlike radioactive materials, have often been evaluated assuming de-minimis level below which little harm is associated with exposures (e.g., OSHA PELs). Where this is the case for given subject matter, ALARA needs to be considered a qualitative concept evaluated against OSHA and IH exposure standards and guidelines.

8.4 ALARA POLICY AND PROGRAM (TF DSA)

The hazardous material protection program ensures that exposures to hazardous materials are below regulatory limits and at a level ALARA. ALARA concepts are employed at the tank farms for hazardous material protection. The goal of ALARA is to reduce the level of hazardous materials and the effects of those materials at the source, and thereby mitigate any effects on workers, the environment, or the public. ALARA also ensures that exposures are kept to the lowest levels and within the limits set by governing authorities (i.e., OSHA PELs, ACGIH TLVs, and DOE directives). Procedures, instructions, and standards ensure exposures are kept to a minimum based on the requirements and provisions of DOE Orders, OSHA regulations, national consensus IH standards, and recommended practices. The IH programs pertaining to hazardous material protection at the Tank Farm Contractor (TFC) facilities utilize elimination/substitution of materials, engineered controls and features, administrative controls, and PPE.

To minimize the use of, and exposure to, hazardous materials, purchase requisitions are reviewed for products that contain or that may result in the production of hazardous chemicals; where possible, less hazardous materials are substituted. In addition, the TFC oversees contractor and subcontractor construction activities at TFC facilities to minimize exposures to hazardous materials through worksite inspections following the requirements of DOE O 440.1A.

5.2 Observations

A-09-ESQ-TANKFARM-001-O01: There is a lack of clear, consolidated information the WRPS IH technical basis is overly complicated and confusing to both workers and outside viewers. There are a number of significant conflicting statements regarding such important elements as PPE and air monitoring requirements. In addition, there are numerous links within key documents that refer the reader to a secondary set of documents, which in turn refer the reader to a tertiary set of documents.

Discussion:

The WRPS IH Technical Basis is overly complicated and confusing to both workers and outside viewers. There are a number of significant conflicting statements regarding such important elements as PPE and air monitoring requirements. In addition, there are numerous links within key documents that refer the reader to a secondary set of documents, which in turn refer the reader to a tertiary set of documents. Another concern is the listing of extensive readings for the implementation of a single IH task of noise dosimetry (TF-OPS-IHT-0015), which states "the following documents may be needed to perform this procedure" then lists 16 major documents, including TLV books, CFR, American National Standards Institute (ANSI) docs, and others.

Assessment Follow-up Items

A-09-ESQ-TANKFARM-001-AFI01: There is a WRPS IH consensus that the tank farms vapor hazards is static and fully characterized, which results in a WRPS IH Departmental mentality that limits vigilant assessment of day-to-day considerations of abnormal events, assessment of new or improved control measures; and interpretation of results. In follow up assessment (Phase II), the following subject areas will be looked at: The nature of the safety culture within WRPS, observations of IH Technicians going through re-qualification or initial qualification, actual sampling (source, personnel, or area), the processing of sample media for laboratory analysis and execution of the Work Instructions/Job Hazard Analysis, field observations of drills for off-normal waste release (and actual should any occur), the monitoring, controls, and associated documentation of abnormal event decision making, and effectiveness of in field sample and data quality assurance process.

6.0 REFERENCES (From DOE Standard IH Practices, DOE-STD-6005-2001 April 2001)

6.1 Government Documents

DOE Directives (Policy, Orders, Handbooks, and Technical Standards)

a. CFR 1910 Part 851 Replacing DOE O 440.1A, Worker Protection Management for DOE Federal and Contractor Employees.

b. DOE O 450.4. Safety Management System Policy.

c. DOE O 450.5. Line Environment, Safety, and Health Oversight.

d. DOE G 440.1-1, Worker Protection Management for DOE Federal and Contractor Employees Guide for Use with DOE O 440.1.

e. DOE G 440.1-2, Construction Safety Management Guide for Use with DOE O 440.1.

f. DOE G 440.1-3, Occupational Exposure Assessment, Implementation Guide for Use with DOE O 440.1.

g. DOE G 440.1-4, Contractor Occupational Medical Program Guide for Use with DOE O 440.1.

h. DOE G 440.1-7, Implementation Guide for Use with DOE N 440.1-7, Interim Chronic Beryllium Disease Prevention Program.

i. DOE Standard 1189-2008, "Integration of Safety into the Design Process."

j. DOE Standard 3009, Preparation Guide for U.S. Department of Energy Non-Reactor Nuclear Facility Documented Safety Analyses

k. GUIDES: DOE G 441.1-2 Occupational ALARA Program Guide

DOE-STD-6005-2001 2 i. DOE O 5480.10A, Contractor IH Program.

- **Other Government Documents**

a. U.S. Department of Labor, OSHA, "Field Inspection Reference Manual."

b. U.S. Department of Labor, OSHA, "Technical Manual."

c. U.S. Department of Labor, OSHA, Title 29 CFR, Part 1910, Occupational Safety and Health Standards, and Part 1926, Safety and Health Regulations for Construction.

d. U.S. Department of Labor, OSHA, Title 29 CFR, Part 1960, Basic Program Elements for Federal Employee Occupational Safety and Health Programs and Related Matters.

6.2 Non-Government Documents

a. ACGIH, "Threshold Limit Values for Chemical Substances and Physical Agents and Biological Exposure Indices" (Latest edition).

b. American Conference of Governmental Industrial Hygienists, "Industrial Ventilation: A Manual of Recommended Practice" (Latest edition).

c. Joseph Damiano and John R. Mulhausen (Editors), "A Strategy for Assessing and Managing Occupational Exposures," 2nd edition. AIHA, Fairfax, VA (1998)

d. Salvatore R. DiNardi, (Editor), "The Occupational Environment. Its Evaluation and Control," AIHA, Fairfax, VA (1997)

e. ANSI, latest version of various standards including, but not limited to:
   1. ANSI Z 88.2, .Respiratory Protection.
   2. ANSI Z 88.6, .Physical Qualifications for Respirator Use.
   3. ANSI Z 117.1, .Safety Requirements for Working in Tanks and Other Confined Spaces.
   4. ANSI Z 136.1, .Safe Use of Lasers.
   5. ANSI Z 358.1, .Emergency Eyewash and Shower Equipment.

f. American Society of Heating, Refrigerating, and Air Conditioning Engineers, "ASHRAE Handbook and Product Directory," volume on Fundamentals.

6.3 Personnel Interviewed

6.3.1 WRPS ESH&Q Safety and Health Manager

6.3.2 WRPS ESH&Q Business Operations Industrial Safety/IH Manager

6.3.3 WRPS ESH&Q Business Operations IH Manager

6.3.4 WRPS SST Retrieval & Closure Safety and IH Manager

6.3.5 WRPS Industrial Hygienists (7 total)

6.3.6 WRPS Industrial Hygiene Technicians (20 total)

6.4 Documents Reviewed

6.4.1 Integrated Environment, Safety, and Health Management System Description for the Tank Operations Contractor, RPP–MP-03

6.4.2 Worker Health and Safety Requirements Implementation Matrix, TFC-ESHQ-S SAF-CD-11

6.4.3 Worker Health and Safety Program, TFC-PLN-47, RPP-27195

6.4.4 Industrial Hygiene Safety Management Program Plan TFC-PLN-55

6.4.5 Tank Operations Contractor Health and Safety Plan TFC-PLN-43, Revision A-12

6.4.6 IH Exposure Assessment Strategy RPP-27195 TFC-PLN-34 R-D-2

6.4.7 Beryllium TFC-PLN 24

6.4.8 ASBESTOS PROGRAM, RPP-MP-625, Revision

6.4.9 Risk Management Plan TFC-PLN-39 Revision C

6.4.10 Emergency Management Program Plan TF-PLN-85

6.4.11 Tank Farm Contractor Training and Qualification Plan TFC-PLN-64

6.4.12 Technical Staff Qualifications Requirements USQ-GCX-2

6.4.13 IH Tech and Qualifications Requirements TFC-BSM-TQ STD-07 RC

6.4.14 Subcontractor Oversight ESH&Q TFC-ESHQ-S_SAF-C-07, Revision B-5

6.4.15 EMPLOYEE JOB TASK ANALYSIS TFC-ESHQ-S_IH-C-17, Revision B-3

6.4.16 IH Deports and Documents (Safety & Health Programs-web page) Dermal Exposure Study & Waste Disturbing Activities Vapor Characterization.

6.2.17 IH Reporting & Records Management TFC-ESHQ-S_IH-C-46

6.2.18 Managing Vapor Control Zones TFC-ESHQ-S_IH-C-48

6.2.19 Chemical Management Process TFC-ESHQ-S_IH-C-47

6.2.20 Industrial Hygiene Alarm Response TFC-ESHQ-S_IH-C-45

6.2.21 TF Chemical Exposure Hazard Analysis (Safety & Health Programs-web page)

6.2.22 Exposure Monitoring, Reporting, and Records Management TFC-ESHQ-IH-STD-03

6.2.23 Industrial Hygiene Response to Vapor Concerns TFC-ESHQ-IH-STD-09

6.2.24 Industrial Hygiene Equipment Management TFC ESQC_H- S PI 11

6.2.25 Industrial Hygiene Response to Employee Contact with Chemical Waste TFC-ESHQ-IH-STD-10

6.2.26 Industrial Hygiene Chemical Vapor Technical Basis RPP-22491, R1

6.2.27 Tank Waste Dermal Exposure Assessment RPP-34147, R O

6.2.28 Concentrations of Chemicals of Potential Concern in Water and Organic Condensates PRR-RPT-24794, R 1

6.2.29 Respirator Issuance and Control ProcessesTFC-ESHQ-S_IH-CD-05.1

6.2.30 Personal Protective Equipment TFC-ESHQ-S_IS-C-02

6.2.31 Blood borne Pathogen Exposure Control Standard TFC-ESHQ-S-24

6.2.32 INDUSTRIAL HYGIENE INSTRUMENT ALARM RESPONSE TFC-ESHQ-S_IH-C-45, Revision A-1

6.2.33 Response to Reported Odors or unexpected Changes to Vapor Conditions, TF Abnormal Operating Procedures:

6.2.34 Evaluation and Procurement of Industrial Hygiene Monitoring Instruments TFC-ESHQ-S_IH-CD-38

6.2.35 3M Breathe Easy Powered Air Purifying Respirator Test and Maintenance TFC-ESHQ-S_IH-D-05.2

6.2.36 MSA OptimAir 6A Powered Air Purifying Respirator Test and Maintenance TFC-ESHQ-S_IH-D-05.3

6.2.37 Using the TVA 1000B Toxic Vapor Analyzer TFC-ESHQ-S_IH-D-25

6.2.38 Tank Vapor Source Monitoring TFC-ESHQ-S_IH-D-27

6.2.39 Permit Required Confined Space TFC-ESHQ-S_IH-C-04, Revision C-2

6.2.40 MIRAN 205B Series SapphIRe Instrument OperationTFC-ESHQ-S_IH-D-32

6.2.41 Noise Surveys, Dosimetry, and Octave Band AnalysisTFC-ESHQ-S_IH-D-34

6.2.42 Hazard CommunicationTFC-ESHQ-S_IH-C-02

6.2.43 COC and Submitting Samples for Laboratory Analysis TFC-ESHQ-S_IH-P-10

6.2.44 Ergonomics TFC-ESHQ-S_IH-STD-03

6.2.45 Cold Stress TFC-ESHQ-IH-STD-01

6.2.46 Heat Stress Control TFC-ESHQ S IH C -07

6.2.47 Laser Safety and Nonionizing Radiation TFC-ESHQ-IH-STD-02

6.2.48 Asbestos Control - Facility Management/General Industry TFC-ESHQ-IH-STD-04

6.2.49 Hearing Conservation Program TFC-ESHQ-IH-STD-06

6.2.50 Lead Control Program TFC-ESHQ-IH-STD-08

6.2.51 Carcinogen Control TFC-ESHQ-IH-STD-11

6.2.52 Industrial Hygiene Monitoring and Control Strategies During Tank Retrieval and Transfers TFC-ESHQ-IH-STD-12

6.2.53 Illumination TFC-ESHQ-IH-STD-13

6.2.54 IHT Flammable Gas Surveillance on Double Shell Tanks TF-OPS-IHT-00

6.2.55 Perform IHT Flammable Gas Surveillance on Single Shell Tanks TF-OPS-IHT-002

6.2.56 Preparation and Field Use of Multi-Gas Monitor Model TMX412 TF-OPS-IHT-003

6.2.57 Preparation and Field Use of iTX Multi-Gas Monitor and iSP Motorized Sampling Pump TF-OPS-IHT-004

6.2.58 Preparation and Field Use of the ppbRAE Volatile Organic Compound Monitor TF-OPS-IHT-005

6.2.59 Preparation and Field Use of Drager Accuro and Accuro 2000 Pump and Colorimetric Indicator TF-OPS-IHT-006

6.2.60 Using DRIs TF-OPS-IHT-007

6.2.61 Using The Sper Scientific Light Meter TF-OPS-IHT-008

6.2.62 IH Pump Preparation and field Use for Personal-Area Air Monitoring TF-OPS-IHT-009

6.2.63 Field Wipe Sampling and Bulk Sampling Methods TF-OPS-IHT-0010

6.2.64 Preparation and Field Use of the AreaRAE Multi-Gas Monitor TF-OPS-IHT-0011

6.2.65 Preparation and Field Use of the QUESTemp 15 and QUESTemp 32 Heat Stress Monitors TF-OPS-IHT-0012

6.2.66 Preparation and Field Use of the Lumex Ra-915+ Mercury Vapor Analyzer TF-OPS-IHT-0014

6.2.67 Preparation and Field Use of the Quest Q300 Noise Dosimeter and 2900 Sound Level Meter TF-OPS-IHT-0015

6.2.68 Preparation and Field Use of the Manning EC-P2 Ammonia Monitor TF-OPS-IHT-0016

6.2.69 Performance Indicators (H&S Web)

6.2.70 IH Exposure Assessment strategy TFC PLN-34, Revision D-2, Section 3.4

6.2.71 WRPS Health and Safety Tool Box Web Page: multiple fact sheets, data sheets, information sheets, analysis and reports.

APPENDIX A – PRINCIPAL DOCUMENT REVIEW AND COMMENTS

Document Title	Document Identifier	Comments
PRIMARY DOCUMENTS		
Integrated Environment, Safety, and Health Management System Description for the Tank Operations Contractor	RPP –MP-03	Baseline ISM
Worker Health and Safety Requirements Implementation Matrix	TFC-ESHQ-S_SAF-CD-11	-Excellent tool.
Worker Health and Safety Program	TFC-PLN -47 RPP-27195	-Does not address New Technology Program -Organizational Roles and Responsibilities element is difficult to access -Medical Surveillance Program is vague
Industrial Hygiene Safety Management Program Plan	TFC-PLN-55	-Calls for a target of 3 IH field Inspections per week -No new technology review process -No element of metrics or corrective action elements
Chemical Hygiene Plan		To be addresses as part of the ATL assessment
Tank Operations Contractor Health and Safety Plan	TFC-PLN-43, REV A-12	-Scope is to be "compliant with 29 CFR 1910.120" -Scope includes (…"facility workers protected from unplanned releases of radioactive and hazardous materials)" -Unsuccessful in accessing WRPS Org Chart via cited web link -Does not address New Technology Program -Document contains cited links and over 200 secondary links contained in those documents - 4.2.1 No discussion of administrative controls -4.6 BBP program is non compliant (see that line item) -6.0 Contamination Control is radiation oriented no direction on chemical decontamination? - Medical surveillance does not address IH interactions with Medical contractor following uncontrolled exposures (EJTA is primary tool for ongoing surveillance).
IH Exposure Assessment Strategy	RPP-27195 TFC-PLN-34 R D-2	Lacks specific methodologies and decision making for use of DRIs, despite general directives provided.
Beryllium	TFC-PLN 24	Previously approved.
ASBESTOS PROGRAM	**RPP-MP-625, REV**	Effective.
Risk Management Plan	**TFC-PLN-39, REV C December 3, 2008**	-No discussion of Engineering control assessments, administrative control efficiency, PPE usage impacts, review of new technologies or future assessment strategies.
Emergency Management Program Plan	TF-PLN-85	Does not address all 29 CFR 1910.120 line items
Staff Qualifications		
Tank Farm Contractor Training and Qualification Plan	TFC-PLN-64	Applicable to all TOC personnel, General in nature
Technical Staff Qualifications Requirements	USQ-GCX-2	IH quals well addressed.
IH Tech Training and Qual Requirements	TFC-BSM-TQ STD-07 R C	-Calls for 2 yr degree + 1 yr experience & Basic in-house IH course, -Does not discuss IHT –Lead Quals -Does not address IH Equipment Custodian Quals
Subcontractor Oversight	**ESH&Q□TFC-ESHQ-S_SAF-C-07, REV B-5□**	**It is unclear as to who will provide the IH support, There are no minimal quals stated for H&S subs**
EMPLOYEE JOB TASK ANALYSIS	**TFC-ESHQ-S_IH-C-17, REV B-3**	**This is the key link in the Medical Surveillance Program within the TOC HASP. Does not address overexposure medical surveillance issues.**
IH Management Elements		
IH Deports and Documents	**Safety & Health**	Excellent resource

- **Dermal Exposure Study** - Waste Disturbing Activities Vapor Characterization.	**Programs-web page**	**- Dermal Exposure Study** - **Dedicated to demonstrating that Silver shield CPC is not warranted for listed TF work.** -Waste Disturbing Activities Vapor Characterization Report
IH Reporting & Records Management	**TFC-ESHQ-S_IH-C-46**	Overall, good document
Managing Vapor Control Zones	**TFC-ESHQ-S_IH-C-48**	Appears to be a very good tool, ties to the TVIS and the CHAD s.
Chemical Management Process	**TFC-ESHQ-S_IH-C-47**	- Not Hazwaste related
Industrial Hygiene Alarm Response	**TFC-ESHQ-S_IH-C-45**	IHT or IH: "Evaluate the cause and determine the need for additional actions" – no decision tree or directives for stop work, etc.
TF Chemical Exposure Hazard Analysis	**Safety & Health Programs-web page**	-Overall, very good risk characterization summaries in similar format for multiple tanks and operations. Use of comparable operations is useful. *T Farm breather filter change out: No need for a vapor control zone and monitoring is limited to ammonia and VOCs: However, WRPS has 1) Provided a list of chemicals in condensate (Hg, nitrosamines, etc) & 2) Stated that filters trap semi vols ?
Exposure Monitoring, Reporting, and Records Management	**TFC-ESHQ-IH-STD-03**	Exceeds OSHA retention of exposure records (75 yrs)
Industrial Hygiene Response to Vapor Concerns	**TFC-ESHQ-IH-STD-09**	Very good overall approach, but cited instruments and techniques are limited in scope?
Industrial Hygiene Equipment Management	**TFC ESQC _H- S PI 11**	Good Directive.
Industrial Hygiene Response to Employee Contact with Chemical Waste	**TFC-ESHQ-IH-STD-10**	"All hazard and facility/area information will be provided to the Occupational Medicine Contractor and the shift manager". What, where, How and when?
Technical Documents		
Industrial Hygiene Chemical Vapor Technical Basis	**RPP-22491, R1**	-Excellent effort, subject to some change per WRPS and HC interactions
Tank Waste Dermal Exposure Assessment	**RPP-34147 Revision 0**	- Excellent Element of Tech Basis- Advance level work -liquid has a pH of 13, yet document only calls for safety glasses, as does the PPE plan below. -Conclusion is unclear with respect to CPC requirements.
Concentrations of Chemicals of Potential Concern in Water and Organic Condensates	**PRR-RPT-24794, R 1**	-Excellent Study and characterization
Respirator Issuance and Control Processes	**TFC-ESHQ-S_IH-CD-05.1**	Effective.
Personal Protective Equipment	**TFC-ESHQ-S_IS-C-02**	-lacks discussion of decision logic for CPC selection &, service life -Indicates that corrosive materials are cause for protection, but the text only addresses impact protection, not splash protection?
Blood borne Pathogen Exposure Control Standard	**TFC-ESHQ-S-24**	- does not define type of Gloves -Refers only to "masks" as respiratory protective equipment
INDUSTRIAL HYGIENE INSTRUMENT ALARM RESPONSE	**TFC-ESHQ-S_IH-C-45, REV A-1**	IHT or IH: "Evaluate the cause and determine the need for additional actions".
Response to Reported Odors or unexpected Changes to Vapor Conditions	**TF Abnormal Operating Procedures:**	IH to collect grab sample for GC/MS Real time monitoring is VOC and ammonia
Evaluation and Procurement of Industrial Hygiene Monitoring Instruments	**TFC-ESHQ-S_IH-CD-38**	- No discussion of new technology reviews, but very good element of such a process.
3M Breathe Easy Powered Air	**TFC-ESHQ-S_IH-D-**	Effective.

Purifying Respirator Test and Maintenance	**05.2**	
MSA OptimAir 6A Powered Air Purifying Respirator Test and Maintenance	**TFC-ESHQ-S_IH-D-05.3**	Effective.
Using the TVA 1000B Toxic Vapor Analyzer	**TFC-ESHQ-S_IH-D-25**	-No discussion of COPC that are detected by PID/FID or sensitivity/ correction factors
Tank Vapor Source Monitoring	**TFC-ESHQ-S_IH-D-27**	Very general, no techniques described.
Permit Required Confined Space	**TFC-ESHQ-S_IH-C-04, REV C-2**	N o comments.
MIRAN 205B Series SapphIRe Instrument Operation	**TFC-ESHQ-S_IH-D-32**	Very good. Note format varies with different instruments.
Noise Surveys, Dosimetry, and Octave Band Analysis	**TFC-ESHQ-S_IH-D-34**	Excellent.
Hazard Communication	**TFC-ESHQ-S_IH-C-02**	Unclear as to what hazard index is used for labeling; HMIS?
Chain of Custody and Submitting Samples for Laboratory Analysis	**TFC-ESHQ-S_IH-P-10**	Good.
Ergonomics	**TFC-ESHQ-S_IH-STD-03**	Sound. Cites TLV Booklet for primary direction. See Also: **TANK FARMS GENERAL INDUSTRIAL SAFETY HAZARDS ANALYSIS** **See Also Ergonomics H&S web page**
Cold Stress	**TFC-ESHQ-IH-STD-01**	Effective.
Heat Stress Control	**TFC-ESHQ S IH C -07**	Good, comprehensive.
Laser Safety and Nonionizing Radiation	**TFC-ESHQ-IH-STD-02**	No comment.
Asbestos Control - Facility Management/General Industry	**TFC-ESHQ-IH-STD-04**	29 CFR 1910.1001(l), *Medical Surveillance* requires a specific pre-placement examination before an employee can be designated as an asbestos worker but TFC-ESHQ-IH-STD-04, *Asbestos Control – Facility Management/General Industry* does not document how these pre-placement requirements are transmitted to the occupational medical office or verified to have been met before placement.
Asbestos Control - Construction Industry	**TFC-ESHQ-IH-STD-05**	No comments
Hearing Conservation Program	**TFC-ESHQ-IH-STD-06**	29 CFR 1910.95(g)(10) defines a standard threshold shift as a change in hearing threshold relative to the baseline audiogram of an average of 10 dB or more at 2000, 3000, and 4000 Hz or greater in either ear. Contrary to this TFC-ESHQ-IH-STD-06, *Hearing Conservation Program*, Revision A, Dated October 28, 2004 list the determining standard threshold shift that is an average of 25 dB or greater at 2000, 3000, and 4000 Hz in either or both ears for written notification to an employee.
Lead Control Program	**TFC-ESHQ-IH-STD-08**	29 CFR 1910.1025(e)(4), *Mechanical Ventilation* requires effectiveness check of at least every three months and within five days of any change that may result in a change in employee exposure to lead. Contrary to this TFC-ESHQ-IH-STD-08, *Lead Control Program* (section 3.3.3, *Mechanical Ventilation*) omits the effectiveness check requirement.
Carcinogen Control	**TFC-ESHQ-IH-STD-11**	29 CFR 1910.1003 (c)(2)(ii) requires for the listed carcinogens within a regulated area, authorized employees upon exit wash the hands, forearms, face, and neck upon each exit. Contrary to this TFC-ESHQ-IH-STD-11, *Carcinogen Control* (Step 10) only identifies the action of washing but is non-specific on body section or upon each exit of the regulated area. 29 CFR 1910.1003(e)(1)(ii)requires a specific sign at entrances to regulated areas containing operations covered by paragraph (c)(5). Contrary to this TFC-ESHQ-IH-STD-11, *Carcinogen Control* (Step 8) does provide the specific signage as the referenced section requires.
Industrial Hygiene Monitoring and Control Strategies During Tank Retrieval and Transfers	**TFC-ESHQ-IH-STD-12**	Requires updating: This February, 2005 document discusses pending, future policies not yet addressed.
Illumination	**TFC-ESHQ-IH-STD-13**	-consistent with 29 CFR 1910.120 M (illumination)
IHT Flammable Gas Surveillance on	**TF-OPS-IHT-001**	-Good record keeping tools, no mention of calibration or correction factors if warranted.

Double Shell Tanks		
Perform IHT Flammable Gas Surveillance on Single Shell Tanks	**TF-OPS-IHT-002**	-Good record keeping tools, no mention of calibration or correction factors if warranted.
Preparation and Field Use of Multi-Gas Monitor Model TMX412	**TF-OPS-IHT-003**	Excellent. Note: No discussion of LEL corrections.
Preparation and Field Use of iTX Multi-Gas Monitor and iSP Motorized Sampling Pump	**TF-OPS-IHT-004**	Effective.
Preparation and Field Use of the ppbRAE Volatile Organic Compound Monitor	**TF-OPS-IHT-005**	Very Good (=/- 10% of bump gas acceptable) No discussion of PID lamp or range, sensitivities or applications.
Preparation and Field Use of Drager Accuro and Accuro 2000 Pump and Colorimetric Indicator	**TF-OPS-IHT-006**	Excellent. Do not understand pump application in text?
Using Direct Reading Instruments	**TF-OPS-IHT-007**	-Overall, good document. - No discussion of COPC that are detected by PID/FID or sensitivity/ correction factors
Using The Sper Scientific Light Meter	**TF-OPS-IHT-008**	Good.
Industrial Hygiene Pump Preparation and field Use for Personal-Area Air Monitoring	**TF-OPS-IHT-009**	Effective.
Field Wipe Sampling and Bulk Sampling Methods	**TF-OPS-IHT-0010**	Effective.
Preparation and Field Use of the AreaRAE Multi-Gas Monitor	**TF-OPS-IHT-0011**	Effective. Good detail.
Preparation and Field Use of the QUESTemp 15 and QUESTemp 32 Heat Stress Monitors	**TF-OPS-IHT-0012**	Effective.
Preparation and Field Use of the Lumex Ra-915+ Mercury Vapor Analyzer	**TF-OPS-IHT-0014**	Effective. Mode of technology absent.
Preparation and Field Use of the Quest Q300 Noise Dosimeter and 2900 Sound Level Meter	**TF-OPS-IHT-0015**	This procedure states the "the following documents may be need to perform this procedure" then lists 16 major documents, including TLV books, CFRs, ANSI docs, etc . This is an unrealistic burden to place on IHTs!
Preparation and Field Use of the Manning EC-P2 Ammonia Monitor	**TF-OPS-IHT-0016**	Unclear as to how an IHT's calibration (if necessary) is accounted for on sticker and records?
Metrics		-
Performance Indicators	**H&S Web**	Good metrics, but limited to subject matter - Lab turn around data - Tracking of # of samples
Industrial hygiene Exposure Assessment Strategy	**TFC-PLN-34, REV D-2 Section 3.4**	-Discusses SEGs -number of exposures below 10% of OELs -Number of exposures greater then 50% of the OEL -Recommendations for SEG revisions or EAS improvements
Tertiary Documents		

Procedural Items	LCO 3.2.3 SST 241-B-203/B-204 Passive Ventilation Sys **Tank Farm DSA Requirements Implementation Matrix** **AC 5.8 Emergency Preparedness** **AC 5.10 Flammable Gas Control** **LCOS: ventilation, Flammable Gas Concentrations**	No Comments
MSDS	**Safety & Health Programs-web page**	Appears to be a sound system of electronic MSDS access.
TANK VAPOR INFORMATION SHEETs	**Safety & Health Programs-web page**	- Dermal Protection outlines those tanks that do not call for silver shield. This does not clarify what CPC, if any, is warranted, nor does it address corrosive element. - Monitoring for COPC's (Chemicals of Potential Concern) Good element to the Exposure Assessment Strategy, as applied to A tank farm only. However, narrative states: " Direct reading instruments (DRI) are used to monitor for COPC that may cause immediate acute effects, such as irritation." However, the list of 8 chemicals that are monitored by DRIs does not include some other COPCs that appear to offer acute effects such as furan? - Health Effects of Chemicals of Potential Concern – good Hazard Communication tool for hazwaste consitutents. - Odor Thresholds – good reference.

Appendix B
09-ESQ-076

U.S. Department of Energy
[redacted]
P.O. Box 450, MSIN H6-60
Richland, Washington 99352

JAN 12 2009

08-ESQ-335

Mr. Mike Armstead
Procurement Contracts Manager
Washington River Protection Solutions LLC
2440 Stevens Center Place
Richland, Washington 99354

Dear Mr. Armstead:

CONTRACT NO. DE-AC27-08RV14800 – NOTIFICATION OF INDUSTRIAL HYGIENE TECHNICAL BASIS ASSESSMENT

The U.S. Department of Energy, Office of River Protection (ORP) will conduct an assessment of the Washington River Protection Solutions LLC industrial hygiene technical basis during the month of January 2009. The lead for this assessment is Richard L. Urie and supported by Mario R. Moreno. An assessment review plan is attached.

If you have any questions, please contact me, or your staff may contact Richard L. Urie, Office of Environmental Safety and Quality, (509) 376-2229.

Sincerely,

Joseph C. Poniatowski
Contracting Officer

ESQ:RLU

Attachment

cc w/attach:
F. Beranek, WRPS
M. W. Jones, WRPS
D. T. Tuckness, WRPS
WRPS Correspondence

Attachment
08-ESQ-335

JAN 1 2 2009

U.S. Department of Energy

Office of River Protection

Industrial Hygiene Technical Basis Assessment

of

Washington River Protection Solutions

Industrial Hygiene Technical Basis Assessment
A-09-ESQ-TANKFARM -001

PURPOSE:

U.S. Department of Energy (DOE), Office of River Protection (ORP) will conduct an assessment of the contractor's Industrial Hygiene (IH) technical basis programmatic documents, staff qualifications, and internal means of management, which provide guidance of work implementation at the Washington River Protection Solutions LLC (WRPS) operated facilities. This assessment fulfills a scheduled assessment that is identified in the ORP Fiscal Year 2009 Integrated Assessment Schedule. The assessment will conform to the requirements of ORP procedure ESQ-IP-1, RO.

INDUSTRIAL HYGIENE SCOPE:

The scope of this assessment shall be limited to the following basic tasks:

I. A review and assessment of all WRPS programmatic IH related documents, as defined in this section;

II. An evaluation of the IH personnel qualifications by way of a review of staff qualifications cards and through small group interviews; and

III. A review of WRPS IH management records, data bases and reports that reflect the current level of effort associated with IH treads analysis, program metrics, program planning, self-assessments, and associated corrective actions.

The assessment plan was developed using DOE G 440.1-3, titled Occupational Exposure Assessment. DOE G 440.1-3 provided the Criteria, Review, and Approach Documents (CRAD)/Lines of Inquiry which are listed below. The assessor modified the CRADs/Lines of Inquiry to be more specific as it relates to WRPS. The assessor will use a combination of conventional review techniques during the course of the assessment, including document reviews, personnel interviews, and field observations.

For the purpose of this assessment and to assure a common understanding, an IH program is considered to consist of the following technical and programmatic sub-elements:

1. Hazard communication & related training;

2. Chemical exposure monitoring, modeling, and related health risk assessments;
   a. Inclusive of air & surface sources, instrumentation, and techniques in consideration of eye/dermal exposures, injection, inhalation and ingestion

3. Toxicology and chemical hazard assessments;
   a. Inclusive of medical surveillance, and consideration of health effects such as cancer, birth defects, chemical sensitivity, target organ effects; explosive,& reactive chemical hazards

4. Implementation and testing of control strategies for IH Hazards;
   a. Inclusive of demonstrated consideration of engineering controls, including ventilation and shielding; administrative controls including product or process substitution; ongoing reviews of emerging technologies

5. Ergonomics and illumination;

6. Identification, assessment, and control of physical work environment factors;
   a. Inclusive of heat and cold, high and low pressure environments, and shift work

7. Selection and use of Personal Protective Equipment, with an emphasis on eye, face, skin, and respiratory protection;

8. Energy and electromagnetic radiation;
   a. Inclusive of the Identification, assessment and control of noise, non-ionizing radiation, and laser safety

9. Biological hazards assessment within the work place;
   a. Inclusive of pathogenic agents, poisonous organisms, and allergens

10. Functional IH Management elements, including:
    a. Staff Training and Qualifications programs
    b. Trends analysis, Metrics, tracking, self-assessments and reporting
    c. Lessons learned, corrective actions and improvements
    d. Employee interactions and informational exchange
    e. Planning, budgeting, and continuing education

11. Integration of the afore mentioned IH elements into applied operations including:
    a. Hazardous Waste Operations
    b. Confined Space Entry
    c. Laboratory Chemical Hygiene Plans
    d. Chemical spill response activities
    e. Beryllium, lead, carcinogen and asbestos management programs

CRITERIA

The CRAD is intended to provide guidance for evaluation of the occupational exposure assessment and health hazards management component of the DOE and WRPS IH program. The goal of the criteria is to answer the fundamental question:

"Is WRPS properly planning, and effectively managing an industrial hygiene, occupational exposure assessment, and hazards management program that meets the intent of 10 CFR 851?"

Enclosure 1 provides detailed questions that may be utilized as specific CRADs. Enclosure 2 provides a summary of the methodology to be employed, to assist WRPS in facilitation of the assessment process.

TEAM MEMBERS:

The assessment team will be lead by Richard L. Urie, with the support of Mario R. Moreno.

REQUIREMENTS:

- 10 Code of Federal Regulations (CFR) Part 851, Worker Safety and Health Program Rule;
- 10 CFR Part 850 Chronic Beryllium Disease Prevention Program; Final Rule (not applicable to this assessment);
- DOE G 440.1-3, Occupational Exposure Assessment;
- DOE O 226.1a, Contractor Assurance;
- OSHA Regulations Standards - 29 CFR 1910 and 1960;
  - 29 CFR 1910, with emphasis on –
    - General Duty Clause
    - 29 CFR 1910.120 Hazardous Waste Operations
    - 29 CFR 1910.132, Personal Protective Equipment
    - 29 CFR 1910.134, Respiratory Protection
    - 29 CFR 191 0. 94, 95 & 97 Ventilation, noise, & Non ionizing Radiation
    - 29 CFR 146 Confined Space Entry
    - 29 CFR 1910.141 Sanitation
- DOE Environmental Safety and Health (ES&H) Reporting Order 231.1; and Computerized Accident/Incident Reporting System;
- DOE O 231.1A, ES&H Reporting;
- Work Authorization System Order; DOE O 412.1A;
- ES&H Goals Policy; DOE P 450.7
- Safety Management Functions, Responsibilities, and Authorities Policy; DOE P 411.1
- Quality Assurance Order; DOE O 414.1C;

- DOE Notice 450.14, Safe Handling, Transfer, and Receipt of Biological Etiologic Agents at Department of Energy Facilities;
- DOE P 456.1, Secretarial Policy Statement on Nanoscale Safety;
- DOE Order 5480.19, Conduct of Operations Requirements for DOE Facilities;
- DOE Order 5480.20A, Personnel Selection, Qualification, and Training. Requirements for DOE Nuclear Facilities; and
- DOE O 225.1A, Accident Investigations.

Richard L. Urie, Team Lead, January 7, 2009

ENCLOSURE 1

PERFORMANCE OBJECTIVES

Performance Objective 1: Washington River Protection Solutions LLC (WRPS) Program Documentation

Criteria to be evaluated:

1. Has the WRPS Safety and Health Organization documented the Industrial Hygiene (IH); occupational exposure and health hazards management programs in a manner which is comprehensive and compliant with 10 Code of Federal Regulations (CFR) 1910.851, 10 CFR 850 and 851, other U.S. Department of Energy (DOE) Directives and recognized consensus standards (e.g., the American Industrial Hygiene Association [AIHA], National Institute of Occupational Safety and Health [NIOSH]). Has the WRPS IH program defined the technical areas and the frequency at which each technical area is assessed? For each technical area, are there procedures for performing the health hazard assessment which defines the purpose, scope, responsibilities, assessment criteria, and references? Does the assessment documentation include: occupational exposure assessment and sampling methodology, laboratory analysis method used, report findings, causal analyses, corrective actions, review, and distribution of report?

2. Has WRPS documented a clear definition of responsibility for decisions by senior management, provision for escalation of worker health matters involving significant occupational exposures and hazards to DOE in an appropriate time frame?

3. Does WRPS maintain a documented sitewide planning and budgeting process which includes priorities for managing occupational exposures and health hazards?

4. Does the WRPS Safety and Health Organization have documented implementation plans for the occupational exposure and health hazards management program?

5. Has WRPS established clear lines of authority and responsibility for managing the occupational exposure and health hazards program? Are responsibilities of each staff position defined for worker health activities? Internal and external interfaces within and between the DOE Office of River Protection, the WRPS, and with outside groups (i.e., State, local, and regional health officials and other government agencies), being clearly and formally defined for each position?

6. Has the WRPS Safety and Health Organization developed and maintained a written occupational exposure and health hazards management program in conformance to 10 CFR 850, and 10 CFR 851.

PERFORMANCE OBJECTIVES

Performance Objective 2: Operating Contractor's Program Implementation of Administrative Elements

Criteria to be evaluated:

1. Has WRPS fully integrated its IH; occupational exposure and health hazards management program into the work planning and execution process?

2. Does the contractor's Safety and Health organization prepare an annual assessment schedule showing the occupational exposure and health hazards assessments planned?

3. Does the contractor's Safety and Health organization submit to the DOE Office of River Protection (ORP), a list of the dates on which occupational exposure and health hazards technical assessments were preformed?

4. Do the WRPS audit management system tools include; procedures for performing occupational exposure and health hazards assessments, worksheets, periodic standard report formats, reference material, training material, which are provided to staff performing assessments?

5. Does the contractor's Safety and Health Organization has a system in place to control, maintain occupational exposures, health hazards management procedures and hazard control guides current? Does the system include a mechanism for updating and distributing procedures, and internal guides on a specified schedule?

6. Does WRPS Safety and Health Organization perform analyses on significant occupational exposures and health hazards assessment findings? Has the contractor identified staff that is responsible for correcting the contractor's health hazard deficiencies? Are the actions necessary to resolve the deficiency addressed in corrective action plans?

7. Does the contactor's Safety and Health organization perform trend analysis of findings from the occupational exposures and health hazards programs? Does the contractor communicate leading and lagging performance trends to ORP? Does the contractor have a technically defensible corrective action management program that will prevent reoccurrence of IH; occupational exposure and health hazards management program deficiencies?

8. Does the contractor's Safety and Health organization have a tracking system that includes all occupational exposures and health hazards finding? Does the tracking system identify corrective actions, schedules, and progress made on corrective actions? Is other information such as results of root cause analyses also included in the tracking system? Is there a method to flag or highlight significant events or actions is included in the tracking system?

9. Does the contractor's Safety and Health organization ensure that management processes, activity hazards identification and analysis, and functional technical appraisals in specific occupational exposure and health hazards assessment subject areas are included in the contractor's program and are integrated into the Contractor's safety management, work planning and execution system?

   Note: This might include: activity hazards analysis, exposure assessments, hazard controls and, the specific technical program elements (e.g., noise and hearing conservation, ventilation, respiratory protection, asbestos, non-ionizing radiation (radio-frequency radiation, lasers, magnetic fields), ergonomics, carcinogens, DOE Beryllium program, Occupational Safety and Health Administration (OSHA) substance specific health standards i.e., Benzene, Asbestos, etc; occupant emergency and critical event planning, sanitation, vibration, extreme temperature, biohazards, confined spaces, laboratory hygiene program, Indoor Air Quality, office environments, recordkeeping, employee training and certification, and labeling and posting).

10. Does the contractor's line management organization track the effectiveness of its implementation of the occupational exposure and health hazards program by reviewing the findings of its internal assessments of the program? Does the contractor's line management identify problems which are promptly corrected?

11. Does WRPS have an effective corrective action program and organizational structure for resolving related action items? Contractor performance with respect to completing corrective actions is documented, reported, and tracked?

12. Does the WRPS Safety and Health organization have adequate staff with a level of professional training, experience commensurate with the requirements for implementation of the IH; occupational exposures and health hazards management program?

13. Does the WRPS Safety and Health organization ensure that internal self-assessments of occupational exposure and health hazards are conducted?

14. WRPS Safety and Health Organization ensure compliance with mandatory standards for assessing and managing occupational exposures and health hazards.

15. Is the WRPS occupational exposure and health hazards assessment staff adequately trained in occupational exposure assessment, such as through an AIHA, or other academic based program? Does the training address familiarization with all mandatory standards, AIHA or NIOSH criteria, guidance documents, and other references that are pertinent to the technical area; use of procedures for conducting the assessment and, instructions on preparing reports and related documentation?

16. Does the WRPS Safety and Health Organization prepare performance indicator reports, utilize performance indicators involving occupational exposures, health hazards data, and other operations information? This includes; medical monitoring, epidemiological surveillances, Computerized Accident/Incident Reporting System, OSHA 300 log data,

Occurrence Reporting and Processing System reportable occurrences, for performing trending and analysis to provide early identification of potential exposure and health hazards and/or deteriorating/improving worker health conditions.

17. WRPS provides management periodic summaries of performance on the assessment and management of occupational exposures and health hazards.

18. Has WRPS developed program management goals related to occupational exposures and health hazard? Are these goals measurable and include short-term (annual) and long-term goals (several year period) to assess and manage occupational exposures and health hazards? Is the progress towards goals monitored regularly and goals adjusted as necessary? Do the line managers have performance elements in their personnel appraisal relating to successful attainment of program management goals?

ENCLOSURE 2

METHODOLOGY

The Industrial Hygiene (IH) technical basis assessment shall consist of the following elements:

1. An in-brief tentatively planned for the week of January 12, 2009, involving the Washington River Protection Solutions LLC (WRPS) health and Safety Manager and IH Manger; and the U.S. Department of Energy (DOE) assessment team. The purpose of the in-brief is to clarify the scope and the applicable Criteria Review and Approach Documents; and to discuss scheduling and logistical requirements of the assessment.

2. The DOE Office of River Protection (ORP) assessment team shall review all WRPS IH related programs, plans, procedures and related documents currently on record. This assessment will not necessarily include a detailed review of data bases, log books, and records, other than to verify the presence of such documents as warranted. The review process will entail a comparative analysis of WRPS programmatic documents to Federal requirements (please see requirements section below) and include a review such umbrellas programs as:

   - 851 requirements Matrix TFC-ESHQ-S_SAF-CD-11;
   - Worker Health and Safety Program, RPP-27195; and
   - Tank Operations Contractor Health and Safety Plan.

To include secondary and tertiary documents such as

- IH Chemical Vapor Technical Basis, RPP-22491, Revision 1;
- IH Exposure Assessment Strategy RPP-27195 TFC-PLN-34 R D-2; and
- IHT-007 Using Direct Reading Instruments.

3. The DOE ORP assessment team will meet with the appropriate WRPS management representatives to gain a clear understanding of WRPS IH program goals, objectives, metrics/ trends analysis, and internal assessment efforts and results. In addition, the team will review the communication process between the WRPS IH management team and the DOE ORP representatives with respect to on-going programmatic updates and special event notifications. The meeting(s) will also serve as an opportunity to clarify any questions regarding WRPS written programs and guidance documents.

4. The DOE ORP assessment team will coordinate with WRPS a series of interviews with equal grades of all WRPS IH personnel for the purpose of evaluating their level of knowledge and

training; and to gain first hand insight into their respective job duties and interactions relative to the programmatic directives.

5. The DOE ORP assessment team will conduct a Generator Assistance Program analysis based on the results of the assessment per a 10 CFR 851 itemized template.

6. Other elements as deemed necessary.

7. The DOE ORP assessment team will conduct a de-brief to discuss any draft observations or findings with WRPS managers of interest.

Task# ORP-ESQ-2008-0344

E-STARS[R] Report
Task Detail Report
01/12/2009 1013

TASK INFORMATION

Task#	ORP-ESQ-2008-0344		
Subject	CONCUR:08-ESQ-335; NOTIFICATION OF INDUSTRIAL HYGIENE TECHNICAL BASIS ASSESSMENT		
Parent Task#		**Status**	CLOSED 01/12/2009
Reference	08-ESQ-335	**Due**	
Originator	Gano, Becky	**Priority**	High
Originator Phone	(509) 376-6004	**Category**	None
Origination Date	12/30/2008 0835	**Generic1**	
Remote Task#		**Generic2**	
Deliverable	None	**Generic3**	
Class	Long Term	**View Permissions**	Normal

Instructions

Correspondence is being routed for concurrence via hard copy. Once you receive the correspondence, please approve or disapprove electronically via E-STARS and route to next person on the routing/concurrence list.

BCC:
ESQ OFF FILE
ESQ RDG FILE
J.C.PONIATOWSKI, AMD
W.J.TAYLOR, ESQ
K.A.HOAR, VCD
R.L.URIE, VCD

RECORD NOTE:

ROUTING LISTS

1	Route List	Inactive

- Urie, Richard L - Review - Cancelled - 01/12/2009 1013
  Instructions:
- Hoar, Kenneth A - Review - Concur - 01/12/2009 1003
  Instructions:
- Taylor, William J - Review - Concur - 01/12/2009 0734
  Instructions:
- Poniatowski, Joseph C - Approve - Approved - 01/12/2009 0936
  Instructions:

ATTACHMENTS

Attachments

1. 08-ESQ-335 att IH Technical Basis Assessment.doc
2. 08-ESQ-335 WRPS LTR Notification of Industrial Hygiene Technical Basis Assessment.doc

COLLABORATION

COMMENTS

Poster Gano, Becky - 01/12/2009 1001

CLOSED

RECEIVED
JAN 12 2009

Task# ORP-ESQ-2008-0344

E-STARS[R] Report
Task Detail Report
12/30/2008 0839

TASK INFORMATION

Task#	ORP-ESQ-2008-0344		
Subject	CONCUR:08-ESQ-335; NOTIFICATION OF INDUSTRIAL HYGIENE TECHNICAL BASIS ASSESSMENT		
Parent Task#		**Status**	Open
Reference	08-ESQ-335	**Due**	
Originator	Gano, Becky	**Priority**	High
Originator Phone	(509) 376-6004	**Category**	None
Origination Date	12/30/2008 0835	**Generic1**	
Remote Task#		**Generic2**	
Deliverable	None	**Generic3**	
Class	Long Term	**View Permissions**	Normal

Instructions

Correspondence is being routed for concurrence via hard copy. Once you receive the correspondence, please approve or disapprove electronically via E-STARS and route to next person on the routing/concurrence list.

BCC:
ESQ OFF FILE
ESQ RDG FILE
J.C.PONIATOWSKI, AMD
W.J.TAYLOR, ESQ
K.A.HOAR, VCD
R.L.URIE, VCD

RECORD NOTE:

ROUTING LISTS

1 Route List Active

- Urie, Richard L - Review - Awaiting Response - Due Date 1/8/09 RL
  Instructions:
- Hoar, Kenneth A - Review - Awaiting Response - Due Date 1/8/09
  Instructions:
- Taylor, William J - Review - Awaiting Response - Due Date 1/9/09
  Instructions:
- Poniatowski, Joseph C - Approve - Awaiting Response - Due Date 1/12/09
  Instructions:

ATTACHMENTS

Attachments
1. 08-ESQ-335 att IH Technical Basis Assessment.doc
2. 08-ESQ-335 WRPS LTR Notification of Industrial Hygiene Technical Basis Assessment.doc

COLLABORATION

COMMENTS

No Comments

TASK DUE DATE HISTORY

No Due Date History

SUB TASK HISTORY

No Subtasks

-- end of report --

APPENDIX C - INTERGRATED SAFETY MANAGEMENT SYSTEM EVALUATION FORM

ISMS Evaluation
ESQ-OA-IP-01-R1
Issued 01/21/09
Tank Operations Contractor
Industrial Hygiene Technical Basis Assessment

For each of the following identify whether the report:

S = Identified a strength

W = Identified a weakness

N = Found the topic with no special strength or weakness

N/A = Did not address the topic

Topical Area	Evaluation	Comment (optional)
Core Function 1: Define the Scope of Work	W	Field work OK, weak at program level
Core Function 2: Analysis of Hazards	N	
Core Function 3: Develop and Implement Hazard Controls	N	
Core Function 4: Perform Work Within Controls	N	
Core Function 5: Provide Feedback and Continuous Improvement	W	
Principle 1: Line Management Responsibility for Safety	W	
Principle 2: Clear Roles and Responsibilities	W	Including weak interfaces with Ops and Eng.
Principle 3: Competence Commensurate with Responsibilities	N	
Principle 4: Balanced Priorities	W	
Principle 5: Identification of Safety Standards and Requirements	W	
Principle 6: Hazard Controls Tailored to Work Performed	W	
Principle 7: Operations Authorization	N	
Supplemental Principle 1: Highly-Reliable Operational Performance	W	
Supplemental Principle 2: Individual Attitude and Responsibility	S	Current workforce usually performs work correctly in absence of program Procedures.
Supplemental Principle 3: Performance Assurance	W	
Supplemental Principle 4: Organizational Performance Improvement	W	

APPENDIX D – ASSESSMENT TEAM BIOGRAPHIES

Richard L. Urie, Team Lead

Mr. Urie is certified in Industrial Hygiene (IH) by the American Board of Industrial Hygiene, # 3681; and is co-certified in safety, but the Board of Safety Professionals, #12248. He holds a masters degree in Environmental Science from the University of Colorado - Denver and a Bachelor of Science Degree in Community Health, from the University of Northern Colorado. He has practiced IH and safety since 1980, with project experience at over 20 major Comprehensive Environmental Response Compensation and Liability Act Sites and 4 U.S. Department of Energy (DOE) facilities within the western United States. He initiated and managed an IH consulting firm from 1988 to 1999, employing 5 Certified Industrial Hygienists and has provided assessments, training, and consultation to over 400 institutions and businesses in the United States, Germany, Kuwait, Iraq, Indonesia, Taiwan, and Australia. He has served as the team lead for the Department of Homeland Security - Biological Emergency Support Team as a member of the HAZMAT Team at the Los Alamos National Laboratory (LANL) and worked directly with the Centers for Disease Control Infectious Disease Branch and the National Institute for Occupational Safety and Health in the response to a suspected bioterrorism event and in the establishment of response planning for perceived targets of opportunity in New York City, New York. He supported research in airborne agricultural bioterrorism through LANL and Texas A&M West. Examples of past IH assessments performed by Rich Urie include:

- PNL - Hanford Pre Tiger Team IH programmatic assessment & HAZWOPER training.
- LANL Readiness Assessment of the TA-54 Decontamination, Volume Reduction System & training.
- Rocky Flats Plant post Tiger Team IH HAZWOPER programmatic assessment and generation of the original HAZWOPER Health and Safety Program.
- U.S. Army Support Operations Iraq/Kuwait: IH risk assessments & training.
- Freeport Indonesia annual IH programmatic Assessments and staff training program.
- Adolph Coors Company IH Emergency Preparedness Assessment and Training.
- Homestake Gold Mine IH Programmatic Assessment.
- National Aeronautics and Space Administration (NASA) White Sands Test Facility IH field Assessments.
- AMOCO Production emergency response assessor, expert witness, and trainer.

He is the author of three publications on the subject of Personal Protective Equipment and associated risk assessments. One such publication was in collaboration with the American Conference of Governmental Industrial Hygienists. He has served as an expert witness in Federal court regarding related IH subject matter, and provided IH presentations to the U.S. Attorney General's Office, Department of Homeland Security, NASA, National Mining Engineers Conference, and DOE, among others. Mr. Urie is currently the IH program representative for the DOE Office of River Protection.

Mario Moreno, Team Member

Mr. Moreno holds a bachelor's degree from California State Polytechnic University in Chemical Engineering. He has provided engineering related services to the U.S. Department of Energy (DOE) for 20 years, including an assignment as the program manager for the Single-Shell Tank stabilization efforts. Mario, formerly with the tank farm nuclear safety/authorization basis; is currently working towards Industrial Hygiene (IH) certification under the DOE Office of River Protection IH mentorship program and has completed a number of IH technical courses. He has participated in numerous health and safety related assessments at the Hanford Site.

washington river protection solutions
PO Box 850
Richland, WA 99352

June 11, 2009

WRPS-0901072 R1

Mr. J. C. Poniatowski, Contracting Officer
U.S. Department of Energy
Office of River Protection
Post Office Box 450
Richland, Washington 99352-0450

Dear Mr. Poniatowski:

CONTRACT NO. DE-AC27-08RV14800 – WASHINGTON RIVER PROTECTION SOLUTIONS LLC RESPONSE TO PHASE 1, INDUSTRIAL HYGIENE TECHNICAL BASIS ASSESSMENT A-09-ESQ-TANKFARM-001, "WASHINGTON RIVER PROTECTION SOLUTIONS LLC CORRECTIVE ACTION PLAN"

Reference: Letter, J. C. Poniatowski, ORP, to J. M. Armstead, WRPS, "Contract No. DE-AC27-08RV14800 – Approval of Extension to the Washington River Protection Solutions LLC (WRPS) Response to Results of Assessment A-09-ESQ-TANKFARM-001," 09-ESQ-175/0901072, dated May 20, 2009.

This letter transmits Washington River Protection Solutions LLC (WRPS) response to the U.S. Department of Energy, Office of River Protection (ORP) assessment A-09-ESQ-TANKFARM-001, Phase I, "Industrial Hygiene Technical Basis." ORP requested a response from WRPS by May 16, 2009, and WRPS was granted an extension to June 15, 2009 in the referenced letter. There were four findings and one observation identified in the assessment report. Enclosed is the WRPS Corrective Action Plan (CAP) that addresses these findings.

Per our commitment to ensure that the highest standards of performance continues, the enclosed Corrective Action Plan addresses the corrective actions taken by WRPS to control or remove any adverse impact from the non-compliant condition, corrective actions taken to identify the extent of condition, and corrective actions taken to correct the causes, and prevent further findings, and the date when all corrective actions will be completed. The corrective actions outlined in the enclosed CAP have been discussed with Ms. S. J. Olinger, Ms. S. L. Charboneau, and Messrs. W. J. Taylor, K. A. Hoar, and R. L. Urie of your staff.

At a meeting on June 5, 2009, Ms. S. J. Olinger directed WRPS to respond to the observation. WRPS is requesting 45 days from the date of this letter to provide a response to the observation.

If you have any questions, please contact me at 372-9168, or Mr. D. T. Tuckness, Worker Safety and Health Manager, at 373-9920.

Sincerely,

(Signature Attached)

J. M. Armstead
Contracts Manager

MWJ:KMR

Enclosure: Corrective Action Plan - Washington River Protection Solutions LLC Response to Phase 1, Industrial Hygiene Technical Basis Assessment A-09-ESQ-TANKFARM-001 (15 pages)

cc: ORP Correspondence Control
S. E. Bechtol, ORP
S. L. Charboneau, ORP
K. A. Hoar, ORP
S. C. Johnson, ORP
S. J. Olinger, ORP
M. R. Moreno, ORP
W. J. Taylor, ORP
M. J. Urie, ORP

WRPS Correspondence Control
J. C. Allen-Floyd, WRPS
F. Beranek, WRPS
J. A. Caldwell, WRPS
T. M. Jennings, WRPS
G. J. Johnson, WRPS
W. J. Johnson, WRPS
M. W. Jones, WRPS
S. M. Sax, WRPS
B. R. Thomas, WRPS
D. T. Tuckness, WRPS

Electronically Approved by:

UserName: Armstead, Mike (h0525980)
Title: Prime Contract Manager
Date: Thursday, 11 June 2009, 02:30 PM Pacific Daylight Time
Meaning: Signed per Direction of the TOC President's Office

==========

CORRECTIVE ACTION PLAN

Phase 1 Assessment of Industrial Hygiene Technical Basis
(A-09-ESQ-TANKFARM-001)

U. S. Department of Energy (DOE), Office of River Protection (ORP)

Assessment Report

April 15, 2009

Prepared by:
Washington River Protection Solutions LLC
June 15, 2009

Table of Contents

1.0 Introduction 3
2.0 Corrective Action Methodology 3
3.0 Corrective Action Plan Structure 3
4.0 Finding Number A-09-ESQ-TANKFARM-001-F01 4
5.0 Finding Number A-09-ESQ-TANKFARM-001-F02 7
6.0 Finding Number A-09-ESQ-TANKFARM-001-F03 10
7.0 Finding Number A-09-ESQ-TANKFARM-001-F04 12
8.0 Review and Approval of WRPS Corrective Actions 15
9.0 Corrective Action Plan Reporting and Closure 15

1.0 Introduction

The U.S. Department of Energy, Office of River Protection (ORP) performed an assessment of the Tank Operations Contractor "Industrial Hygiene Technical Basis." The assessment report was transmitted on April 15, 2009. The assessment resulted in four findings. This Corrective Action Plan (CAP) addresses the following issues:

- **A-09-ESQ-TANKFARM-001-F01:** Contrary to 29 CFR 1910.120(p)(5), "New Technology Program, " 29 CFR 1910.120(o)(1), "New Technology Programs" and 1910.120(o)(2) WRPS has not established and implemented programmatic procedures which direct the evaluation and introduction of new technologies into the WRPS Environmental Safety Health & Quality group, which includes the IH program.
- **A-09-ESQ-TANKFARM-001-F02:** Contrary to 29 CFR 1910.132(d), 1910.132(d)(1), 1910.132(d)(1)(i), 1910.132(d)(1)(ii), 1910.132(d)(2), 1910.134(c)(1), 1910.134(c)(1)(i), 1910.120(p)(8), WRPS has not established a written, fully comprehensive decision logic for the selection and use of PPE.
- **A-09-ESQ-TANKFARM-001-F03:** Contrary to 10 CFR 851.21, "Hazard Identification and Assessment" there is a lack of specified criteria in the selection of direct reading air monitoring instrumentation and interpretation of results.
- **A-09-ESQ-TANKFARM-001-F04:** Contrary to 10 CFR 851.21 and 851.23, there is an absence of written direction to incorporate the mandated goal of reducing worker exposure to carcinogens and all other chemicals to levels ALARA, below the Chemicals of Potential Concern (COPC) Occupational Exposure Limit (OEL).

2.0 Corrective Action Methodology

A process based on WRPS procedure TFC-ESHQ-Q_C-C-01, *Problem Evaluation Request*, and TFC-ESHQ-Q_ADM-C-12, *Apparent Cause Analysis and Corrective Action Planning*, was used to develop this CAP. The Findings are documented in Problem Evaluation Requests (PERs) in the Washington River Protection Solutions LLC (WRPS) Issues Management System. The causal analysis, extent of condition, remedial corrective actions, and planned corrective actions for the Findings are documented and tracked in the associated PERs. The causes summarized below are supported by an analysis using commonly accepted causal analysis methods.

3.0 Corrective Action Plan Structure

Each finding is addressed in a separate section. For each finding, the following is provided: background; corrective actions that have been taken to control or remove any adverse impact from the noncompliant conditions until sustainable corrective actions are implemented; corrective actions that will be taken to identify the extent of conditions, correct the causes, and prevent further findings; and the date when all corrective actions will be completed verified and compliance to the applicable requirements achieved.

4.0 Finding Number A-09-ESQ-TANKFARM-001-F01

4.1 Finding

Contrary to 29 CFR 1910.120(p)(5), "New Technology Program, " 29 CFR 1910.120(o)(1), "New Technology Programs" and 1910.120(o)(2) WRPS has not established and implemented programmatic procedures which direct the evaluation and introduction of new technologies into the WRPS Environmental Safety Health & Quality group, which includes the IH program.

4.2 Background

WRPS has written programs and procedures describing the processes for actively seeking out and/or developing new technology to improve worker protection. The written documents cover engineering technology development, instrumentation, and respiratory protection. Examples of technology include waste handling equipment, instrumentation and PPE. Procedures and training are developed when new technology is introduced to ensure employee protection is maintained.

The need for technology development is identified by WRPS when existing processes are inadequate or inefficient and no proven technology is available in the industry for the intended application. Inadequate or inefficient processes often result in workers spending more time in hazardous environments, which increases the risk of harm. TFC-PLN-90 "Technology Development Management Plan" defines the tank farm work processes for developing and deploying new technologies. TFC-PLN-90 is a formal, written document that includes engineering, quality assurance and procurement requirements and complies with 29 CFR 1910.120 (o)(1) as a procedure "...for the introduction of effective new technologies and equipment developed for the improved protection of employees working with hazardous waste..." The technology development process progresses through 3 phases. During phase I, discussions are held with potential vendors who have promising technologies that can be developed for WRPS. A formal procurement is initiated to support further development and testing. The statement of work includes functional criteria and testing requirements for the end use of the developmental technology. During phase II, promising technology is subjected to qualification testing to verify that it meets the intended performance and functional criteria. Test plans and procedures are developed. Inspection is conducted during testing to verify compliance with approved procedures. Prior to release for deployment, the QA engineer verifies the quality of the technology for the intended use. Phase III is deployment. The responsible implementing organization applies existing systems for procedures, receipt inspection, storage, handling and work planning to deploy the technology in the field. TFC-PLN-90 also includes a graded application of Quality Assurance program requirements concerning each phase of technology development.

As an example, design is underway on an innovative robotic arm that offers the potential to increase the efficiency of waste removal from single-shell tanks. The arm, referred to as the Mobile Arm Retrieval System (MARS), will be capable of a wide range of motion and include

telescoping capabilities to enable it to reach the tank extremities. Interchangeable tools on the end of the arm will be used to break up the waste, move it to a pump and remove it from the tank. Incorporating lessons learned from other DOE sites and the corporate parents of WRPS with new technology innovations such as use of lightweight and high-strength composite materials have increased the options for effective tank waste retrieval. Improved retrieval effectiveness and efficiency is expected to lead to workers spending less time in hazardous environments.

TFC-PLN-64 "Industrial Hygiene Instrumentation Plan" includes a formal selection and evaluation process to be implemented prior to purchase of an instrument. This evaluation is conducted by an IH assisted by IHTs, Engineering, Quality Assurance, and the maintenance calibration contractor. TFC-ESHQ_S-IH-CD-38 "Evaluation and Procurement of Industrial Hygiene Monitoring Equipment" is the document that describes in detail the instrument evaluation process. In addition, WRPS has included in the instrument maintenance calibration subcontract statement of work a requirement for the subcontractor to notify WRPS of advances in IH instrumentation or newer models that will improve IH monitoring accuracy or efficiency, including those demonstrated to be successfully evaluated by other Hanford contractors. As an example, the portable gas chromatograph/mass spectrometer (GC/MS) was selected as a method to quickly qualitatively analyze for many of the chemicals of potential concern in vapor grab samples. This improved the efficiency in determining whether protective measures are warranted for a given activity and work location.

Additionally in the area of industrial hygiene instrumentation, WRPS's Performance Objectives, Metrics and Commitments includes an objective for new instrumentation evaluation. Initial evaluation of four potential instrumentation technologies has been completed and further evaluation of one of the technologies (Photon Transfer Reaction Mass Spectrometry) is continuing for use as a real time monitor for VOCs in the tank farms.

In the area of personal protective equipment, WRPS continually looks for new technology. Several documents help drive these activities. Examples where these evaluations have lead to the use of new technology:

- The identification of a different respirator that could be used in locations where a powered air purifying respirators (PAPR) equipped with a high efficiency particulate cartridge equipped, hard hat and hood would be required. This PAPR also is the first model to have audible and visual low flow and low battery alarms. After evaluation of the respirators for tank farm applications and user requirements, the respirators were procured by operations. A maintenance and testing program specific to the PAPRs was developed to ensure safe and reliable operation when in use. The program specifies maintenance, testing, repair and setup of the battery power pack and filter housing.
- The upgrade to use nickel metal hydride battery in PAPRs. These batteries offer increased airflow to the user and can operate the PAPR blower units longer than the previously used nickel-cadmium battery. The nickel metal hydride battery is equipped with a red indicator light that activates after about eight to nine hours of continuous use

and alerts the user that the battery needs to be changed-out for a fully charged battery. These batteries also are not prone to developing a memory.

- The identification of OREX clothing that reduces the potential for heat stress. Currently another generation of OREX is under evaluation that could in some cases replace the use of rainsuits and further reduce the risk of heat stress.

4.3 The Corrective Actions Taken to Control or Remove any Adverse Impact from the Noncompliant Conditions and the Results Achieved

Several examples of procedures, processes and field applications were identified that implement the requirement for new technology. No adverse impacts were identified as a result of the finding. Therefore, no immediate corrective actions were taken.

4.4 Corrective Actions Taken to Identify the Extent of Condition

This finding already applies at the company level. Therefore, no extent of condition was performed for this finding.

4.5 Corrective Actions to be Taken to Correct the Causes and Prevent Further Findings

As identified in the assessment report, there are many examples that show in written documents and current practice that WRPS actively pursues new technologies. However, there is an opportunity to improve the program by formalizing the description of the existing practices within engineering and the Health and Safety organization for complying with the cited standard and compiling the new technologies evaluated in a centralized list. In addition to making compliance easier to demonstrate, these improvements further emphasize the WRPS commitment to continuously improving worker protection. The following actions will be taken:

No.	Action	Deliverable(s)	Responsible Manager	Completion Date
CA-01-01	Update TFC-PLN-55 "Industrial Hygiene Safety Management Program Plan" to clearly describe the WRPS practice for complying with the standard, give direction on giving input to the Health and Safety organization on new technologies evaluated, and adding to the requirements section 29 CFR 1910.120(p)(5), "New Technology Program, " 29 CFR 1910.120(o)(1), "New Technology Programs" and 1910.120(o)(2).	Updated procedure	M. Jones	8/28/09

CA-01-02	Update TFC-PLN-91 "Industrial Safety Management Program Plan" to clearly describe the WRPS practices related to industrial safety worker protection equipment (e.g., fall protection devices) for complying with the standard, give direction on giving input to the Health and Safety organization on new technologies evaluated, and adding to the requirements section 29 CFR 1910.120(p)(5), "New Technology Program, " 29 CFR 1910.120(o)(1), "New Technology Programs" and 1910.120(o)(2).	Updated procedure	W. Gaydosh	8/28/09
CA-01-03	Update TFC-PLN-90 "Technology Development Management Plan" to clearly state the WRPS practice for compliance with the new technology standard, give direction on giving input to the Health and Safety organization on new technologies evaluated, and adding to the requirements section 29 CFR 1910.120(p)(5), "New Technology Program, " 29 CFR 1910.120(o)(1), "New Technology Programs" and 1910.120(o)(2).	Updated procedure	R. Mendoza	8/28/09
CA-01-04	Develop and maintain a centralized list of new technologies evaluated. The list will include input from engineering, industrial safety and industrial hygiene.	List of new technologies	M. Jones	7/31/09

4.6 Finding Analysis

WRPS has reviewed this finding and initiated corrective actions to promote improvement.

5.0 Finding Number A-09-ESQ-TANKFARM-001-F02

5.1 Finding

Contrary to 29 CFR 1910.132(d), 1910.132(d)(1), 1910.132(d)(1)(i), 1910.132(d)(1)(ii), 1910.132(d)(2), 1910.134(c)(1), 1910.134(c)(1)(i), 1910.120(p)(8), WRPS has not established a written, fully comprehensive decision logic for the selection and use of PPE.

5.2 Background

TFC-ESHQ-S_SAF-C-02, "Job Hazard Analysis" is the procedure for hazard assessment and control selection at WRPS. The work hazard analysis document produced during implementation of this procedure and TFC-OPS-MAINT-C-02, "Pre-Job Briefing," are the tools for communicating to employees the hazard and controls for a job. If PPE is required, TFC-ESHQ-S_IS-C-02, "Personal Protective Equipment" provides selection criteria and guidance. RPP-23074 "Tank Vapor Chemicals of Potential Concern, Existing Direct Reading Instrumentation and Personal Protective Equipment Considerations" took the newly released RPP-22491 "Industrial Hygiene Chemical Vapor Technical Basis" and considered respiratory protection, protective glove and suit materials for each chemical of potential concern (COPC). RPP-34147 "Tank Waste Dermal Exposure Assessment" evaluated actual dermal tank waste exposures and calculated theoretical worst case exposure scenarios for tank farm activities for dermal and ocular exposure to tank waste, tank vapors, and tank condensate. It was concluded that standard engineering controls, work practices and protective equipment prevent worker contact with tank wastes, and the worst case dermal hazard scenarios are not met. These conclusions are incorporated in TFC-ESHQ-S_IS-C-02, Attachment A. If respirators are required, TFC-ESHQ-S_IH-C-05, "Respiratory Protection" provides selection criteria and guidance. This guidance addresses the requirements listed in 10 CFR 1910.134, "Respiratory Protection" (evaluation of hazards, identification of relevant workplace and user factors that affect performance and reliability, exposure time, exposure concentration, chemical state and physical form of hazard, use of NIOSH approved respirator, respirator assigned protection factor, selection of proper filter/cartridge, cartridge change out schedule). Tank waste vapor exposure characterization studies have been performed looking at sampling and monitoring data collected during waste disturbing and non-waste disturbing activities. Data and conclusions from these studies have been integrated into worker protection control measures. For example, headspace, source, area, and personal data are available for use in IH hazard analyses performed in TFC-ESHQ-S_IH-C-48, "Managing Vapor Control Zones" and documented in a chemical exposure hazard analysis. During emergency response, WRPS emergency procedures cover initial responses to put employees in safe conditions (e.g., evacuate upwind, take cover, etc...) and then the incident commander/HFD, with input from emergency response radiological and chemical hazard assessors, provide direction on the hazard controls for emergency responders.

5.3 The Corrective Actions Taken to Control or Remove any Adverse Impact from the Noncompliant Conditions and the Results Achieved

Inhalation and dermal exposure assessments for tank waste hazards have been documented and determinations of controls, including PPE, have been selected based on a sound and accepted

decision logic. The tank farm procedures and practices implement these determinations. No adverse impacts were identified as a result of the finding. Therefore, no immediate corrective actions were taken.

5.4 Corrective Actions Taken to Identify the Extent of Condition

This finding already applies at the company level. Therefore, no extent of condition was performed for this finding.

5.5 Corrective Actions to be Taken to Correct the Causes and Prevent Further Findings

As identified in the discussion section of the assessment, the TFC-ESHQ-S_IS-C-02, "Personal Protective Equipment" does not provide a pre-determined process for the selection and service life of chemical protective clothing. It is recommended that TFC-ESHQ-S_IS-C-02, "Personal Protective Equipment" be revised to include a reference for guidance on a recommended chemical protective clothing (CPC) material reference for guidance on CPC selection and service life. This will strengthen the tools available to the industrial hygiene professionals responsible for selecting of CPC. It was also identified that the language in TFC-ESHQ-S_IS-C-02, "Personal Protective Equipment" regarding contact with tank waste could be confusing. It is recommended that TFC-ESHQ-S_IS-C-02, "Personal Protective Equipment" be revised to clarify the hazard and controls associated with tank waste contact. The clarifying statements will clearly provide the existing determination for dermal exposure protection from contact with tank waste. The following actions will be taken:

No.	Action	Deliverable(s)	Responsible Manager	Completion Date
CA-02-01	Update TFC-ESHQ-S_IS-C-02, "Personal Protective Equipment" to include a reference for guidance on a recommended chemical protective clothing (CPC) material reference for guidance on CPC selection and service life.	Updated procedure	W. Gaydosh	9/30/09
CA-02-02	Update TFC-ESHQ-S_IS-C-02, "Personal Protective Equipment" to clarify the hazard and controls associated with tank waste contact.	Updated procedure	W. Gaydosh	9/30/09

5.6 Finding Analysis

WRPS has reviewed this finding and initiated corrective actions to promote improvement.

6.0 Finding Number A-09-ESQ-TANKFARM-001-F03

6.1 Finding

Contrary to 10 CFR 851.21, "Hazard Identification and Assessment" there is a lack of specified criteria in the selection of direct reading air monitoring instrumentation and interpretation of results.

6.2 Background

Two procedures and an "IH Monitoring/Sampling Fact Sheet" address the specific selection criteria for direct reading air monitoring instrumentation. The two procedures are TF-OPS-IHT-007 "Using Direct Reading Instruments" and TFC-ESHQ-S_IH-CD-38 "Evaluation and Procurement of Industrial Hygiene Monitoring Instruments".

Guidance for field selection of instrumentation is provided to the industrial hygienist in TF-OPS-IHT-007 "Using Direct Reading Instruments". TF-OPS-IHT-007 Attachment 4 itemizes selection criteria for choosing direct reading instruments for field use. Section 5.1.3 states "SELECT the appropriate direct reading instrument for the contaminants to be sampled, considering:

- Instrument accuracy
- Instrument sensitivity
- Instrument limitations
- Instrument power sources
- Instrument operating temperature ranges
- Instrument response times
- Potential interferences

"IH Monitoring/Sampling Fact Sheet" found on the "Safety & Health Programs" home page provides a detailed guide on what monitoring instrument to select for evaluating different COPC's. Examples from this fact sheet include the use of iTX for ammonia and ppbRAE for Ethylamine.

Guidance for the procurement of new instrumentation is provided in TFC-ESHQ-S_IH-CD-38 Attachment 1, section 3.0 which directs the industrial hygienist to use form A-6003-896 to ensure that all applicable factors have been considered and evaluated prior to the procurement of any monitoring instrument." Form A-6003-896: "Evaluation of Industrial Hygiene Monitoring Instruments Form" lists selection criteria under the column "EVALUATION FACTOR" to include such items as:

- What is the need for the instrument, ie new chemical hazard, improved technology?

- What agent/s does the instrument measure and by what method?
- What are the optimal operating conditions (temperature, relative humidity and pressure) for operation of the instrument?
- What environmental factors will cause interferences such as dust, humidity or electric fields?
- Note the high and low detections limits, the detection range, and sub-ranges (e.g., 0-200 ppm and 20-1000 ppm)
- What is the detection limit?
- What chemicals will cause false positive/false negative readings or other interferences?
- Will the instrument record specific data, such as the average, the peak, and lowest readings?
- List limitations of the instrument that are not specified above.

6.3 The Corrective Actions Taken to Control or Remove any Adverse Impact from the Noncompliant Conditions and the Results Achieved

Several examples of specific criteria for the selection of direct reading air monitoring instruments and interpretation of results have been provided. No adverse impacts were identified as a result of the finding. Therefore, no immediate corrective actions were taken.

6.4 Corrective Actions Taken to Identify the Extent of Condition

This finding already applies at the company level. Therefore, no extent of condition was performed for this finding.

6.5 Corrective Actions to be Taken to Correct the Causes and Prevent Further Findings

As identified in the discussion section of the assessment, reliance on professional judgment creates the potential for errors, inconsistency and difficulty for auditors. While WRPS has an industrial hygiene qualification process (rated highly by the ORP assessment) that enhances our staff's professional judgment, an update to TF-OPS-IHT-007 is recommended to incorporate a decision logic for instrument selection and data interpretation for routine and non-routine monitoring. The update will be communicated to the industrial hygienists. The rationale for the volatile organic compound action level will be provided in an industrial hygiene fact sheet. These actions are intended to reduce the risk of errors and inconsistencies associated with the reliance on professional judgment of industrial hygienists and auditors. The following actions will be taken:

No.	Action	Deliverable(s)	Responsible Manager	Completion Date
CA-03-01	Update TF-OPS-IHT-007 by incorporating documentation of the decision logic for routine and non-routine monitoring regarding instrument selection and data interpretation.	Updated procedure.	M. Jones	9/30/09
CA-03-02	Communicate to the industrial hygienists the changes to the procedure.	Communication to the industrial hygienists.	M. Jones/K. Roueche/L. Gurney	10/30/09
CA-03-03	Document the rationale for the volatile organic compound action level.	Industrial hygiene fact sheet.	M. Jones	7/17/09

6.6 Finding Analysis

WRPS has reviewed this finding and initiated corrective actions to promote improvement.

7.0 Finding Number A-09-ESQ-TANKFARM-001-F04

7.1 Finding

Contrary to 10 CFR 851.21 and 851.23, there is an absence of written direction to incorporate the mandated goal of reducing worker exposure to carcinogens and all other chemicals to levels ALARA, below the Chemicals of Potential Concern (COPC) Occupational Exposure Limit (OEL).

7.2 Background

WRPS fully endorses the best management practice "to maintain chemical vapor exposures as low as is practical." WRPS believes this is a key aspect of our worker protection program. The ALARA concept in industrial hygiene is the anticipation, recognition, evaluation and control of hazards and is based on American Industrial Hygiene Association "A Strategy for Assessing and Managing Occupational Exposures" (AIHA Strategy) as provided in guidance from DOE G 440.1-3.

While there is not a formal description of the ALARA concepts as related to industrial hygiene, the tenets of ALARA concepts (similar to those or the Radiological Control Program) are generally described in our existing procedures and processes. Overall, WRPS procedures, plans and training courses have, through various means, provided direction and approaches to maintaining chemical exposure to as low as is practical.

At the TOC, the defining document for chemical ALARA concepts is the RPP-13033 Tank Farm Documented Safety Analysis. Chapter 8, "Hazardous Material Protection," section 8.4 states the hazardous material ALARA policy and program as the following: "The hazardous material protection program ensures that exposure to hazardous materials are below regulatory limits and where possible additional controls are in place to further reduce exposures." The chapter continues with a description of hazardous material training, hazard identification, administrative limits, occupational medical surveillance, respiratory protection, hazardous material monitoring, instrumentation, record keeping, hazard communication, and occupational chemical exposures. These ALARA concepts are implemented through other safety and health programmatic documents.

Additional carcinogen and chemical exposure direction is found in TFC-ESHQ-IH-STD-11 "Carcinogen Control" and TFC-PLN-34, the "Industrial Hygiene Exposure Assessment Strategy." The primary purpose of TFC-PLN-34, which is based on the AIHA Strategy, is to ensure exposures are characterized and controlled well enough to keep present risks acceptable and to put the organization in the position to manage future risks. Managing future risks is, in part, a function of maintaining exposures to a level that is acceptable.

WRPS believes there is improvement needed to make the chemical ALARA a cohesive program. Actions to improve the program are described in section 7.5.

7.3 The Corrective Actions Taken to Control or Remove any Adverse Impact from the Noncompliant Conditions and the Results Achieved

Programs, procedures and training courses have been identified which provide written direction on maintaining carcinogen and chemical exposures ALARA. No adverse impacts were identified as a result of the finding. Therefore, no immediate corrective actions were taken.

7.4 Corrective Actions Taken to Identify the Extent of Condition

This finding already applies at the company level. Therefore, no extent of condition was performed for this finding.

7.5 Corrective Actions to be Taken to Correct the Causes and Prevent Further Findings

In an effort to improve the WRPS IH ALARA program, actions have been identified. These improvement actions will assist WRPS in providing a comprehensive and cohesive process for maintaining chemical vapor exposures as low as is practical.

We will improve our documents on IH ALARA. A policy statement will be added to our Industrial Hygiene Safety Management Program Plan stating our goal is "to maintain chemical vapor exposures as low as is practical." We will review our plans and procedures to ensure a consistent approach on IH ALARA concepts. We will develop, as part of the ongoing actions related to the Hanford Concerns Council (HCC) Phase I independent review, a sampling strategy that provides a method for management to evaluate program performance in maintaining exposures to tank vapors by reducing uncertainties.

We will develop a communication plan for improving the work force awareness of IH ALARA principles. This plan could include, for example, communication of information about IH ALARA principles and work practices through campaigns (e.g. posters) and use of the Chemical Vapor Solutions Team (CVST).

In addition, WRPS is committed to having an outside review of the IH ALARA process at the TOC as compared to the principles of a radiological ALARA program, to assist in determination of areas where the IH ALARA process could be improved. This outside review will identify gaps for WRPS to determine which elements of ALARA concepts can be better described, defined and implemented through our Safety and Health Programs to support the goal of "to maintain chemical vapor exposures as low as is practical."

No.	Action	Deliverable(s)	Responsible Manager	Completion Date
CA-04-01	Add the policy statement "to maintain chemical vapor exposures as low as is practical"	Revised TFC-PLN-55 Industrial Hygiene Safety Management Program Plan	M. Jones	8/28/09
CA-04-02	Develop and provide to HCC a strategy for continued tank vapor exposure assessment.	New draft document provided for HCC review.	M. Jones	6/22/09
CA-04-03	Review and update TOC IH procedures to provide a consistent message on ALARA concepts	Updated documents	M. Jones	11/30/09
CA-04-04	Develop a communication plan to improve IH ALARA awareness.	New communication plan	D. Tuckness	8/28/09
CA-04-05	Conduct a review of the IH ALARA process compared to a radiation ALARA program and determine areas for improvement	Issue statement of work with schedule to outside reviewer.	F. Beranek	8/28/09

7.6 Finding Analysis

WRPS has reviewed this finding and initiated corrective actions to promote improvement.

8.0 Review and Approval of WRPS Corrective Actions

This CAP was developed by the assigned responsible manager and was approved by the Safety & Health Manager.

9.0 Corrective Action Plan Reporting and Closure

Corrective actions for each Finding will be tracked and monitored using the PER system.

To close an action, the responsible manager must provide objective evidence documenting completion of the actions and verifying compliance to the applicable requirements. Closure documentation will be attached electronically to the associated PER.

Save

Problem Evaluation Request (PER)

WRPS-PER-2009-0899
In Process/Work

PER No	Date of Discovery	Time of Discovery (24:00)	Project
WRPS-PER-2009-0899	05/05/2009	15:39	S&H

Location

OTHER

How Was Problem Discovered

DOE-ORP

Description of Concern or Problem

The U. S. Department of Energy, Office of River Protection (ORP) conducted a Phase I assessment (A-09-ESQ-TANKFARM-001) of the programmatic elements of the Washington River Protection Solutions LLC Industrial Hygiene program during January and February 2009. The assessment was directed at four elements of interest including past assessments, program technical basis and procedures, staff qualifications, and program management. The assessment resulted in four Findings and one Observation including:

A-09-ESQ-TANKFARM-001-F04: Contrary to 10 CFR 851.21 and 851.23, there is an absence of written direction to incorporate the mandated goal of reducing worker exposure to carcinogens and all other chemicals to levels ALARA, below the Chemicals of Potential Concern (COPC) OEL.

Requirement Not Satisfied	Source Document Number

Equipment Identification Number	System Identification

Immediate actions Taken or Planned

Initiated PER

Recommended Corrective actions

Assign to M. Jones. Develop CAP and transmit to ORP.

Originator Contact

e-mail

Originators Name	Originators ID	Originators Phone	Date Initiated
Mata, Beth L	H0056284	(509) 373-0422	05/05/2009

SHIFT OPERATIONS REVIEW

Title

ORP Assessment of Industrial Hygiene Program Finding 4

How Discovered	Agency
Externally Identified	DOE ORP

Reportability	SSC Operability	Operability Review	Comp Measures Req
Non-Reportable	N/A	N/A	

Describe actions Taken or Recommended

No additional actions taken or recommended by the BOSO.

SO Reviewer Name	SO Reviewer ID	SO Reviewer Phone	SO Review Date
Higham, Dale B	H0078950	(509) 373-2689	05/05/2009

SCREENING

PER Significance Level	
PER with Resolution	

Independent Assessment Review	Occurrence Report Number	Externally Identified	
Yes		Yes	
Assigned Responsible	**Facilities Rep / SSO**	**Safety Management Rep**	

Manager			
Jones, Mark W		Tuckness, Dennis T	
Program		**Safety Management Program**	
• N/A		• Industrial Hygiene	
PER Screening Comments			
PER w/ Res with informal Apparent Cause Analysis (Nancy Brown 05/06/09)			
Causal Code			
A5B2C05	Communications LTA Written Communications Content LTA Ambiguous instructions/requirements		
A5B3C01	Communications LTA Written Communication Not Used Lack of written communication		
MGT/Comm/Train	**Human Performance**	**GEMS**	**Equip/Eng/Other**
Failed Barrier	**ORPS Code**	**Functional Area**	**Work Process**
	Not Applicable	Occupational Safety and Health	• ALARA Concerns (not RadCon) • Assessments
ISMS	**Consequence Code**		
Perform work within the controls	• ^N/A^ - No consequence code applies		
PER Screening Chair	**PER Screening Chair ID**	**PER Screening Chair Phone**	**PER Screening Date**
Brown, Nancy L	H0088797	(509) 373-0992	05/06/2009
PAAA REVIEW			
PAAA Screening	**PAAA Codes**	**Function Codes**	
PAAA, Non-NTS Reportable	• 10 CFR Appendix A to Part 851 (6)	• Industrial Hygiene	
NTS Report Number	**NTS Report Date**		
Repetitive / Recurrent	**Programmatic**	**Intentional Violation / Misrepresentation**	
No	No	No	
PAAA Screening Comments			
TFC-PLN-47, Section 6.4			
PAAA Reviewer Name	**PAAA Review Date**		
Anderson, Craig E	05/06/2009		
PAAA Approver Name	**PAAA Approve Date**		
Anderson, Craig E	05/07/2009		
SENIOR MANAGEMENT REVIEW/CONCURRENCE			
TF Operations Morning Leadership Call			
N/A			
Instructions for Responsible Manager			
Review the PER Screening Tab for requested data. Complete the task in E-STARS in accordance with TFC-ESHQ-Q_C-C-01, and TFC-ESHQ-Q_ADM-C-12 Apparent Cause Analysis & Corrective Action Planning.			
Senior Management	**Sr Mgmt ID**	**Sr Mgmt Phone**	**Sr Mgmt Review Date**
Brown, Nancy L	H0088797	(509) 373-0992	05/07/2009
CAUSE ANALYSIS			
Description of Occurrence			
The Tank Farm DSA contains the DOE required ALARA program and policy for hazardous materials. However, the IH			

Program doesn't have a cohesive written ALARA program for chemical exposures.

Extent of Condition

The WRPS plans/procedures/training were reviewed to determine the extent of the chemical ALARA principles in the documents. While there is not a formal description of the ALARA concepts as related to industrial hygiene, the tenets of ALARA concepts (similar to those or the Radiological Control Program) are generally described in our existing procedures and processes. There is no evidence of non-compliance. Opportunities for improvement were identified. The WRPS procedures/plans that need to be revised are identified in the attached corrective action plan.

Safety Significance

This is a programmatic improvement that is not likely to impact employee safety, equipment or environmental protection.

Generic Implications

Remedial Corrective Action

Write Corrective Action Plan to detail the procedure/plan changes to provide a more cohesive chemical ALARA program.

Causal Analysis, Apparent Cause and/or Root Cause Analysis

WRPS has programs, procedures, and training courses in place which provide written direction on maintaining carcinogen and chemical exposures ALARA. While chemical ALARA is practiced in industrial hygiene the documentation was not brought to reflect practice. WRPS has determined that the chemical ALARA program will be improved as noted in the corrective action plan.

CORRECTIVE ACTIONS

Actionee	Action Due Date	E-STARS Number
Jones, Mark W	08/28/2009	

Action

Add the policy statement "to maintain chemical vapor exposures as low as is practical"

Deliverable: Revised TFC-PLN-55, Industrial Hygiene Safety Management Program Plan

Corrective Action Attachments

ATTACHMENTS

0900723_09-ESQ-076_WRPS_-_[0904160568].pdf

Link to PER

WRPS 0901072 R1 Letter.doc[1].pdf

WRPS-0901072_R1_Enclosure_Native.doc

AUDIT HISTORY

Change Date	Auditor	Comments
05/07/2009 10:03	Brown, Nancy L	Responsible Manager Task Launched by Brown, Nancy L

-- End of Report --
07/09/2009 04:52 PM

Task# WRPS-PER-2009-0899

E-STARS[R] Report
Task Detail Report
07/09/2009 1652

TASK INFORMATION			
Task#	WRPS-PER-2009-0899		
Subject	RES; ORP Assessment of Industrial Hygiene Program Finding 4		
Parent Task#		**Status**	Open
Reference		**Due**	06/27/2009
Originator	^PER Coordinator	**Priority**	Medium
Originator Phone		**Category**	PER
Origination Date	05/05/2009 1540	**Generic1**	None
Remote Task#		**Generic2**	None
Deliverable	PER Review	**Generic3**	None
Class	None	**View Permissions**	Global
Instructions	*No Instructions*		

ROUTING LISTS		
1	Responsible Manager	Active
	Review the PER Screening Tab for requested data. Complete the task in E-STARS in accordance with TFC-ESHQ-Q_C-C-01, and TFC-ESHQ-Q_ADM-C-12 Apparent Cause Analysis & Corrective Action Planning.	
	• Jones, Mark W - Assign - Completed with comments - 06/18/2009 0938 *Instructions:*	
	• Jones, Mark W - Assign - Completed with comments - 06/18/2009 0954 *Instructions:* Did you contact the originator about the PER? Document your contact in the response window.	
	• ^Independent Assessment Review(Brown, Robert L) - Review - Concur with comments - 06/29/2009 1424 *Instructions:* Independent Assessor Review	
	• Tuckness, Dennis T - Review - Concur with comments - 07/01/2009 1520 *Instructions:* Safety Management Representative Review	
2	Review Initial PER	Inactive
	Review New PER	
	• ^SO(Higham, Dale B) - Review - Concur - 05/05/2009 2229 *Instructions:*	
	• ^PER Screening(Brown, Nancy L) - Review - Concur - 05/06/2009 1544 *Instructions:*	
	• ^Mgr Review - Review - Cancelled - 05/07/2009 1003 *Instructions:*	

ATTACHMENTS	
Attachments	1. 0900723_09-ESQ-076_WRPS_-_[0904160568].pdf 2. Link to PER 3. WRPS 0901072 R1 Letter.doc[1].pdf 4. WRPS-0901072_R1_Enclosure_Native.doc

COMMENTS	
Poster	Jones, Mark W (Bowman, Tami A) - 06/18/2009 0938

Task# WRPS-PER-2009-0899

	Completed		
	Corrective actions ready to launch. Bowman 6/18/2009		
Poster	Jones, Mark W (Bowman, Tami A) - 06/18/2009 0954		
	Completed		
	PER originator contacted via telephone. Bowman 06/18/2009		
Poster	^Independent Assessment Review (Brown, Robert L) - 06/29/2009 1424		
	Concur		
	Concur		
Poster	Tuckness, Dennis T - 07/01/2009 1520		
	Concur		
	This was a formal corrective action plan to ORP		
TASK DUE DATE HISTORY			
Modified	05/07/2009 1003 - ^PER Coordinator	**New Due Date**	06/19/2009 1630
Modified	05/07/2009 1003 - ^PER Coordinator	**New Due Date**	06/27/2009 1630
Modified	05/05/2009 1540 - ^PER Coordinator	**New Due Date**	05/07/2009 1630
SUB TASK HISTORY			
Subtask#	WRPS-PER-2009-0899.1		
Subject	RES; ORP Assessment of Industrial Hygiene Program Finding 4		
Originator	Jones, Mark W (Bowman, Tami A)		
	Routing List	*No Active Routing List*	

-- end of report --

INCOMING CORRESPONDENCE COVERSHEET

CORR-2009-0083

Author	Addressee	Correspondence No.
J. C. Poniatowski/ORP	J. M. Armstead/WRPS	0900723 DOE-ORP: 09-ESQ-076

Subject: CONTRACT NO. DE-AC27-08RV14800 – RESULTS OF ASSESSMENT A-09-ESQ-TANKFARM-001, PHASE 1, "INDUSTRIAL HYGIENE TECHNICAL BASIS"

DISTRIBUTION

Washington River Protection Solutions
WRPS Correspondence Control
JC Allen-Floyd
JM Armstead
F Beranek ((Assignee))
HS Berman
MN Brosee
C Burrows
GJ Johnson
WJ Johnson
MW Jones
MA Lindholm
KJ Rueter
DJ Sansotta
SM Sax
BR Thomas
DT Tuckness

Priority:	**NORMAL**
Assignee:	F. Beranek
Received:	April 16, 2009
Due Date:	5/16/2009 – Respond to the assessment findings as directed by ORP.

WRPS Correspondence Control
For Questions call: 376-0271
Outlook Address: ^WRPS Correspondence Control

U.S. Department of Energy
Office of River Protection
P.O. Box 450, MSIN H6-60
Richland, Washington 99352

APR 15 2009

09-ESQ-076

0900723

Mr. Mike Armstead, Contract Manager
Washington River Protection Solutions LLC
2440 Stevens Center Place
Richland, Washington 99354

Dear Mr. Armstead:

CONTRACT NO. DE-AC27-08RV14800 – RESULTS OF ASSESSMENT A-09-ESQ-TANKFARM-001, PHASE I, "INDUSTRIAL HYGIENE TECHNICAL BASIS"

This letter transmits the results of the U.S. Department of Energy, Office of River Protection assessment of the Tank Operations Contractor "Industrial Hygiene Technical Basis." The assessment was completed on February 23, 2009.

The assessment resulted in four findings. The assessment team concluded that there are deficiencies in the programmatic assessment of new technologies to enhance worker safety and health, the selection and use of Direct Reading Instruments for air monitoring, the incorporation of the goal of applying the concept of "As Low As Reasonably Achievable" (ALARA) to chemical vapor exposures, and the selection process for personal protective equipment.

It should be noted that the Washington River Protection Solutions LLC is being requested to demonstrate how the ALARA concept shall be incorporated into the safety culture with respect to the monitoring and control of chemical vapors, as it is being applied to ionizing radiation hazards.

Within 30 days of receipt of this letter you shall respond to the assessment findings. The response shall include:

- The corrective actions that have been taken (i.e., compensatory measures) to control or remove any adverse impact from the non-compliant condition until sustainable corrective actions are implemented;

- The corrective actions that will be taken to identify the extent of condition, correct the causes, and prevent further findings (i.e., Corrective Action Plan); and

- The date when all corrective actions will be completed verified and compliance to the applicable requirements achieved (i.e., completion of an effectiveness review).

APR 1 5 2009

If you have any questions, please contact me, or your staff may contact William J. Taylor, Assistant Manager, Office of Environmental Safety and Quality, (509) 376-7851.

Sincerely,

Joseph C. Poniatowski
Contracting Officer

ESQ:RLU

Attachment

cc w/attach:
WRPS Correspondence

RECEIVED
APR 1 6 2009
WRPS
CORRESPONDENCE CONTROL

Attachment
09-ESQ-076
A-09-ESQ-TANKFARM-001

United States Department of Energy
Office of River Protection
Tank Operations Contractor
Industrial Hygiene Technical Basis Assessment

Final Report
A-09-ESQ-TANKFARM-001
March 10, 2009

Richard L. Urie
Team Leader

EXECUTIVE SUMMARY

The U.S. Department of Energy, Office of River Protection (ORP) conducted a Phase I assessment of the programmatic elements of the Washington River Protection Solutions LLC (WRPS) Industrial Hygiene (IH) program from January 16, 2009, through February 20, 2009. The assessment was directed at four elements of interest: past assessments, program technical basis and procedures; staff qualifications; and program management.

Conclusions

There are many very strong elements to the IH technical basis, including a well qualified staff; an extensive sampling and Personal Protective Equipment (PPE) inventory; proper utilization of accredited laboratories; and a solid funding base. The programmatic element for control, conveyance, and management of sampling data appears to be exceptional. WRPS has established over 80 documents related to IH information and directives. However, there is a missing tier of direction, which normally serves as the bridge between the general instructive programs and implementation. Specifically, there is an absence of written methodologies that normally provide the basis for the selection of PPE and some Direct Reading Instruments, which is a fundamental programmatic necessity. There is also a lack of strategic sample planning and data management, which is reportedly being addressed through the support of an expert IH consultative panel. In addition, there is an absence of a dedicated program for the review or development of new technologies for the purpose of enhancing worker health and safety, as required under 10 Code of Federal Regulations (CFR) 851, "Worker Safety and Health Plan."

An overriding observation of the WRPS technical basis is the prevalence of references made to IH professional judgment. ORP acknowledges and encourages the application of professional judgment, with respect to interpretation of directives and real time response to changes in operational needs or off normal events. However, there is an absence of the basis for decision making that has been critically reviewed, documented, and unilaterally applied to the WRPS operations. In addition, there is a lack of documentation of individualized IH decisions, which results in a lack of on-going and post event accountability. Lastly, the WRPS IH goals and objectives neither stipulate, nor discuss the requirement to reduce chemical exposures to As Low As Reasonably Achievable (ALARA), below the Occupational Exposure Limits (OEL). The absence of this goal is reflected in a prevailing attitude through IH and Industrial Hygiene Technician Staff, that chemical vapor exposures are adequately characterized and controlled with respect to conventional standards. ORP shall closely examine the WRPS health and safety culture in the second phase of the assessment to ascertain the degree in which this is problematic in regards to the impacts to the management of off normal events, continued efforts for improvement, and the incorporation of health and performance based goals.

FINDINGS

A-09-ESQ-TANKFARM-001-F01: Contrary to 29 CFR 1910.120(p)(5), "New Technology Program," 29 CFR 1910.120(o)(1),"New Technology Programs" and 1910.120(o)(2) WRPS has not established and implemented programmatic procedures which direct the evaluation and

introduction of new technologies into the WRPS Environmental Safety Health & Quality group, which includes the IH program.

A-09-ESQ-TANKFARM-001-F02: Contrary to 29 CFR 1910.132(d), 1910.132(d)(1), 1910.132(d)(1)(i), 1910.132(d)(1)(ii), 1910.132(d)(2), 1910.134(c) (1), 1910.134(c)(1)(i), and 1910.120(p)(8), WRPS has not established a written, fully comprehensive decision logic for the selection and use of PPE.

A-09-ESQ-TANKFARM-001-F03: Contrary to 10 CFR 851.21, "Hazard Identification and Assessment" there is a lack of specified criteria in the selection of direct reading air monitoring instrumentation and interpretation of results.

A-09-ESQ-TANKFARM-001-F04: Contrary to 10 CFR 851.21 and 851.23, there is an absence of written direction to incorporate the mandated goal of reducing worker exposure to carcinogens and all other chemicals to levels ALARA, below the Chemicals of Potential Concern (COPC) OEL.

OBSERVATION

A-09-ESQ-TANKFARM-001-O01: There is a lack of clear, consolidated information. The WRPS IH technical basis is overly complicated and confusing to both workers and outside viewers. There exists an uncharacteristically high element of deference to professional judgment.

Acronyms

ABIH	American Board of Industrial Hygiene
ACGIH	American Conference of Governmental Industrial Hygienists
AIHA	American Industrial Hygiene Association
ALARA	As Low As Reasonably Achievable
ANSI	American National Standards Institute
CFR	Code of Federal Regulations
CH2M HILL	CH2M HILL Hanford Group, Inc.
COC	Chain of Custody
COPC	Chemicals of Potential Concern
CPC	Chemical Protective Clothing
DOE	U.S. Department of Energy
DRI	Direct Reading Instrument
ESH&Q	Environmental Safety Health and Quality
HCC	Hanford Concerns Council
IH	Industrial Hygiene
IHT	Industrial Hygiene Technician
NIOSH	National Institute for Occupational Safety and Health
OEL	Occupational Exposure Limits
ORP	Office of River Protection
OSHA	Occupational Safety and Health Administration
PAPR	Powered Air Purifying Respirator
PEL	Permissible Exposure Level
PPE	Personal Protective Equipment
SST	Single Shelled Tank
STEL	Short Term Exposure Limit
TFC	Tank Farm Contractor
TFIH	Tank Farm Industrial hygienist
TLV	Threshold Limit Value
VOC	Volatile Organic Compound
WRPS	Washington River Protection Solutions LLC

Table of Contents

1.0 SURVEILLANCE SCOPE 1

2.0 SURVEILLANCE METHODOLOGY 1

3.0 DISCUSSION 1

4.0 CONCLUSIONS 13

5.0 FINDINGS AND OBSERVATIONS 15

6.0 REFERENCES (From DOE Standard IH Practices, DOE-STD-6005-2001 April 2001) 20

APPENDIX A. Principal Document Review and Comments
APPENDIX B. Industrial Hygiene Technical Basis Assessment of WRPS (PLAN), A-09-ESQ-TANKFARM-001
APPENDIX C. Integrated Safety Management System Evaluation Form
APPENDIX D. Assessment Team Biographies

1.0 SURVEILLANCE SCOPE

The scope of this 2009 Phase I assessment of the Washington River Protection Solutions LLC (WRPS) Industrial Hygiene (IH) program, is limited to the foundation of the program, involving an assessment of plans, procedures, risk assessment documents, staff qualifications, and documented management tools. Within this scope, the U.S. Department of Energy (DOE), Office of River Protection (ORP) team addresses the primary question: "Is WRPS properly planning, and effectively managing an industrial hygiene, occupational exposure assessment, and hazards management program that meets the intent of 10 CFR 851?"

2.0 SURVEILLANCE METHODOLOGY

The methodology of the assessment consisted of four discrete efforts, followed by Generator Assistance Program analysis based on the results of the assessment per the DOE 440.1-8, "Implementation Guide for use with 10 Code of Federal Regulations (CFR) 851." The four elements of the assessment were:

- A review of past assessments conducted by DOE, the Hanford Concerns Council (HCC) – expert panel, the CH2M HILL Hanford Group, Inc. (CH2M HILL) IH Program Health/Analysis presentation to the Executive Safety Review Board (September 25, 2008), WRPS "Industrial Hygiene Safety Management Program Plan-Management Assessment" - 0900116, the WRPS Fact Finding for 702AZ Condensate Drained from Ventilation Duct on December 17, 2008, Report NO. 2008-025; and the National Institute for Occupational Safety and Health (NIOSH), "Health Hazard Evaluation Report 2004-0145-2941;"

- A review and assessment of all available WRPS IH related documents which are generated or owned by the WRPS Environmental Safety, Health, and Quality (ESH&Q) division, plus select and pertinent tertiary documents that are referenced with the IH program documents;

- An evaluation of the IH personnel qualifications by way of a review of staff qualifications cards and through small group interviews of as many staff members as feasible; and

- A series of meetings with the WRPS IH manager and associated review of WRPS IH management records, data bases, and reports that reflect the current level of effort associated with IH treads analysis, program metrics, program planning, budgeting, staffing, self-assessments, and associated corrective actions.

3.0 DISCUSSION

Due to the relatively broad spectrum of the "Industrial Hygiene Technical Basis Assessment Phase I" scope of work; this section is simplified by being organized by the four basic elements, as follows: Review of Past IH Assessments; Document Review; Staff Qualifications; and Program Management. Each of these subsections refers to attachments, which provide specific methods and results or data points. Appendix A is a checklist generated from the performance evaluation criteria, as they pertain to the four primary assessment elements.

3.1 Past Tank Farm IH Assessments

A number of assessments, including two major third-party assessments have been performed on the chemical exposure elements of the Tank Farm IH program, over the last seven years. The two major assessments reviewed include the NIOSH "Health Hazard Evaluation Report 2004-0145-2941," released in July 2004 and the HCC commissioned report by an expert panel, entitled "The Industrial Hygiene Chemical Vapor Technical Basis," dated June 2008. These documents were reviewed to ascertain the historical concerns of the past contractor's program. One management assessment of the IH program was conducted by WRPS, since accepting operations on October 1, 2008, and in addition, ORP surveillance of WRPS response to an abnormal event, included some IH elements.

Under the current WRPS management assessment process, internal staff, including subcontractor personnel, perform an evaluation of the WRPS IH program, submit the results to the IH Program Manager and enter results into the Problem Evaluation Request system for tracking corrective actions. The results of the management assessment (WRPS-0900116, "Industrial Hygiene Safety Management Program Plan-Management Assessment," dated January 19, 2009) indicated four areas in need of improvement, improve an element of heat stress monitoring in a particular survey, maintaining procedures not used on a regular basis, issues on Right-to-Know Stations, and hierarchy of controls required by 10 CFR 851. The WRPS management assessment appears to be comprehensive in nature and some of the observations noted by WRPS are consistent with the ORP Assessment Team's observations, including the issue of some procedures not being updated since the implementation of 10 CFR 851 and deficiencies in the Personal Protective Equipment (PPE) selection process.

There are no WRPS assessments of IH practices during off normal events, other than a fact finding report at this time. The "ORP Management Concern S-09-ESQ-TANKFARM-003 WRPS Response to Abnormal Events" report was in draft form at the time of this assessment. However, it is of value to this assessment, as it provides direction in the review of IH procedures, relative to the chemical exposure risk assessment process, the documented process for selection and use of PPE, post event communications with the Hanford medical provider, selection and use of air monitoring instruments, and identification of exposure source materials.

The tank farm contractor transition briefing entitled "Industrial Hygiene Program Health/Analysis" dated September 25, 2008, provided only minimal amount of performance metrics of the IH program. Having an adequate set of metrics is needed since the overall goal of an IH program is the prevention of occupational disease, illnesses, and disorders that impact the health of workers; interfere with operational stability; and negatively impact the comfort and morale of personnel. As such, metrics that allow for the measurement and tracking of adverse impacts are necessary for the correction of causative factors in meeting this goal. Compliance with standards such as Threshold Limit Values (TLV) is a mandatory, secondary objective that assists in meeting this goal. Effort should be provided in developing leading indicators as much as possible.

3.2 Document Review

3.2.1 General

The Assessment Team reviewed over 80 WRPS IH related procedures, fact sheets, supporting documents, or sets of documents in the course of the assessment. They were comprised of top tier health and safety and IH management plans, staff qualifications plans and requirements, technical directives, quality assurance directives, operational procedures, performance tracking documents, an exposure monitoring data base, and WRPS web page based hazard communication resources. Appendix A of this assessment contains a list of those documents and observations associated with each document, as warranted.

The collective set of programmatic documents address a cadre of preventative medicine elements including hearing conservation, ergonomics, heat and cold stress, illumination, blood borne pathogens and others addressed in Appendix A. Of these elements, the thrust of the program is dedicated to the evaluation and control of chemical exposures. The chemical monitoring and control aspects of the written programs contain some excellent, advanced level efforts that have been developed as part of the technical basis for the understanding and control of chemical exposure associated with the waste constituents. Documents pertaining to the characterization of tank headspace vapors, personnel exposure sampling results, occupational exposure limits and liquid chemical constituents form the technical basis which serves as baseline risk assessments for the decision logic that follows in procedural documents. In addition, there are documents which provide very specific directions on IH monitoring, procedural processes, PPE, and administrative controls. Many of these documents at the secondary and tertiary levels are highly instructive and self-explanatory.

However, there are four general observations germane to a number of IH related procedures, one of which was also self-identified by WRPS. They are:

- The first is a lack of written core decision logic, which results in excessive deference to an IH professional judgment approach;

- Secondly, the collective state of the programmatic elements are very voluminous, somewhat contradictory (see "Example of Concern" on next page) and difficult to interpret at the implementation level. Both manifestations of the program may be cause for confusion and have a negative impact on the functionality and credibility of the program as a whole, particularly from interested parties not involved in the day-to-day IH operations.

- In addition, a sub-set of programmatic IH procedures pre-dated 2005 should have been revised to include as required by 10 CFR 851.23(a)(9) American Conference of Governmental Industrial Hygienists (ACGIH), "Threshold Limit Values for Chemical Substances and Physical Agents and Biological Exposure Indices," 2005 referenced

TLVs when they are lower (more protective) than permissible exposure limits found in 29 CFR 1910. For example, TFC-ESHQ-IH-STD-06, "Hearing Conservation Program," Revision A, dated October 28, 2004, was not revised to include the 2005 TLV, it should be noted the actual TLV in this case was not revised in 2005 it remains, 85 decibels, A-weighting scale [dBA] 8-hr Time Weighted Average;

- Communications between WRPS and AdvanceMed Hanford regarding medical surveillance, is not well defined. Medical surveillance stipulated for either pre-placement or annual exams typically do not provide the medical surveillance requirements to be met by the occupational medical contractor or in the absence of this information feedback – verification that the requirements were met before placement or continued placement. For example, 29 CFR 1910.1001(I), "Medical Surveillance" requires a specific pre-placement examination before an employee can be designated as an asbestos worker but TFC-ESHQ-IH-STD-04, "Asbestos Control – Facility Management/General Industry" does not document how these pre-placement requirements are transmitted to the occupational medical office or verified to have been met before placement;

- Lastly, the programmatic goals fail to address the requirement for monitoring and controlling chemical exposures to As Low As Reasonably Achievable (ALARA), below the Occupational Exposure Limits (OEL). The existing written goal of maintaining exposures below 50% of the OELs is not consistent with the requirements stipulated in DOE Orders, nor with the ACGIH, 2005 TLV booklet, incorporated into 10 CFR 851. The application of an ALARA goal is not only mandated, but is of particular significance to the health and safety of workers who deal with a vast mixture of chemicals, of unknown cumulative toxicological effects. In addition, there is no written consideration of the margin of sampling error associated with the existing sample collection and analysis utilized, nor for the use of Direct Reading Instruments (DRI) to monitor for short term exposure limits.

  Example of Concern:

  TFC-ESHQ-S-IS-C-02-RevB-12 (February 2008) states: "Some of the chemicals in tank waste and condensate can damage the skin, irritate the skin, or be absorbed through the skin"

  RPP-34147, Revision 0 (June 2007) states as the last statement of the conclusions: "Therefore, dermal exposure hazards from tank waste is extremely low and requires no additional Controls"

  Fact Sheet EH-0607 (October 2007) "Dermal Protection from Tank Waste, Condensate and Tank Vapors" refers to RPP-34147 for direction, suggesting (but unclear) that neither silver shield® Chemical Protective Clothing (CPC) or any other designated CPC is warranted for Tank Farms Operations at the listed tank sites.

3.2.2 Lack of Clear, Consolidated Information

WRPS maintains a hierarchy of programmatic documents, which flow down from general, to more specific information and directives. ORP recognizes that such a process is necessary due to the voluminous nature of the materials. However, the process, which has evolved out of response to needs, is cumbersome and sometimes lacks clarity in an end result. As an example, a key document is the "Tank Operations Contractor Health and Safety Plan." Normally, such a plan contains necessary instructions to workers as a standalone, pragmatic document which addresses eight fundamental subjects, mandated in 29 CFR 1910.120 (P). The sections of the WRPS document that address IH subject matter, collectively refer to 32 links necessary to understand the basic components, which in turn refer to over 200 secondary links. The difficulties in locating and extracting specific, operational IH information were reflected by Industrial Hygiene Technicians (IHT) during a small group interview. Yet the documents as a whole, fail to adequately address three of the eight mandated items. The subjects that are absent or deficient are: 1) Medical Surveillance; 2) New Technologies Program; and 3) Emergency Response, including PPE.

Example: INDUSTRIAL HYGIENE INSTRUMENTATION PLAN, TFC-PLN-64, REVISION B-1, summarizes the selection of DRIs as a skill of IH Professional decision as follows: "Instruments will be selected by the project Industrial Hygienist (IH) as part of the development of the sampling/monitoring plan and will be based on the hazard to be measured"

Another confusing element pertains to the "IH Exposure Assessment Strategy" (TFC-PLN-34, Revision D-2), which discusses Short Term Exposure Limits (STEL) Plan and Ceiling Limits, but is non-specific in the application to the strategy. A sub-section in Appendix B of the plan, states: "Ceiling limits are generally airborne concentrations which should never be exceeded...Certain chemicals have STELs or ceiling limits that have unique sample duration periods. Averaging times for the TF COPCs are listed in Appendix B." However, no further instruction is provided in Appendix B. (Note: this section is referenced as being adapted from the American Industrial Hygiene Association (AIHA) 1998, Leidel 1977, and ACGIH. It appears that the supporting appendices were not included in the WRPS plan.)

3.1.1 Personal Protective Equipment Decision Logic

A key element within the WRPS programmatic directives, which lacks reproducible methodology is that required for the selection of PPE. Although there are a number of good documents describing Chemicals of Potential Concern (COPC) and individual considerations of selection, there is no indication as to what PPE is available onsite; and neither a process nor a defensible, pre determined selection of PPE, which can be consistently utilized by the IH Staff.

3.2.3.1 Chemical Protective Clothing and Chemical Eye Protection

A review of documents related to PPE discuss tank waste chemical constituents relative to dermal exposure, but fall short of a discussion of the specific selection of CPC and eye protection associated with the toxicants of the waste and a pH of 13 (highly corrosive). In addition, there is no consideration of precautionary measures for such off normal effects as a splash involving a high body surface area, and/or the eyes. The "Personal Protective Equipment" TFC-ESHQ-S-C-02 is the baseline directive for the selection of chemical protective clothing and eye protection, yet the section on eye protection is limited to safety glasses for impact protection only. The CPC and glove section of The "Industrial Hygiene Exposure Assessment Strategy" TFC-PLN-34 D-2, refers to this document for direction on skin protection. A supporting document, the "Tank Waste Dermal Exposure Assessment" RPP-34147, serves as an extensive study of potential chemical absorption and justification for not issuing Silver Shield® or 4H® gloves for stipulated tank farms. However, each of the documents fail to address the following significant items:

- Protection from skin burns or dermatitis due to chemical contact of the hands;
- Protection from skin burns or large surface area chemical absorptions, from a large scale splash;
- the health impacts and protection of the eyes associated with liquid splash; and
- the documents collectively fail to provide a pre-determined decision or a clear decision process for the selection and service life of CPC. Such common considerations associated with multiple chemical breakthrough times, permeation rates, and degradation of various materials used in the selection and use of CPC is absent.

> **Note:** TFC-ESHQ-S-IS-C, Rev B-12 (PPE), Section 6.3.1 states that *some chemicals in tank waste and tank condensate can damage the skin, irritate, or be absorbed by the skin and to consult IH in the work planning process.*

The IH technical basis requires CPC decision logic and methodologies. The level of effort necessary to fill in the gaps is potentially minor, but significant to the process.

3.2.3.2 Respiratory Protective Equipment

The Tank Operations Contractor Health and Safety Plan states the following:

"Personal protective equipment includes use of respiratory protection approved by Industrial Hygiene, either as specified in job procedures, Tank Vapor Information

Sheets, or job hazard analyses or through voluntary use even though not required for compliance with the occupational exposure limit."

In addition, the WRPS Respiratory Protection Plan is a 54-page document, of which two pages of text and a single page figure are provided on the subject of respirator selection. The information provided, is in general terms and includes a statement that **"Specific guidance for respirator selection is available from NIOSH and OSHA."** Neither document provides specific information that is relevant to what respirator options are available to WRPS, the applicability of respirator cartridges to various COPCs, including carcinogens or mixed contaminant considerations; and those respirator ensembles that are not approved for specific applications, such as an acid gas cartridge is not approved for nitric acid nor hydrogen sulfide gas. No other documents were observed to address the decision logic for consistent decision making by IHs throughout the program.

During the course of interviews one IH professional discussed a recent event, in which a small quantity of methylene chloride was spilled and the IH was tasked with taking photos of the spill scene. The IH professional judged the exposure was below the TLV for methylene chloride, but utilized respiratory protective equipment on a voluntary basis. The respirator selected for the task was a Powered Air Purifying Respirator (PAPR) with (presumably) an organic vapor cartridge. The use of a PAPR was made in error, on two accounts: 1) PAPR is not approved for methylene chloride by manufacturers due to poor adsorption to activated carbon; and 2) Occupational Safety and Health Administration (OSHA) specifically mandates the use of supplied air respirators for potential exposure to methylene chloride vapors exceeds the Permissible Exposure Limit (PEL) or STEL (29 CFR 1910.1052(g)). In addition, there was no documented effort to perform a simple ventilation calculation to document the PEL or STEL was not exceeded. The professional judgment exercised in this situation demonstrates a potential outcome associated with the lack of written selection protocols and directions. Additionally, there is no common mode of documentation on the selection process of respiratory protection by the IH Professional. This in turn, leads to the inability of a technical peer review and a single point error for the respiratory selection process. Professional judgment alone is an insufficient technical basis for the selection of respiratory protection. WRPS must identify decision logic for unilateral application at tank farms.

3.2.4 Clarification of DRI Applications and Decision Logic

There are excellent documents within the WRPS program, which describe the use and calibration of IH instruments and a significant amount of data available for the characterization of COPCs. However, there is an absence of written directives or fact sheets that specifically demonstrate the applicability of some DRIs relative to what is being surveyed in sampling plans and the basis for turn back values. There are also tables which list the COPCs and the appropriate instrument or reference to a pump or SUMA® method, however, there is no summary for such operational and interpretative needs as the detection limits for the DRIs, cross sensitivity & correction factors, the range

relative to the COPCs and therefore, what determines a DRI action level. This absence of standardized criteria was reflected in an interview with IHTs, as inconsistencies in the assignment of DRIs for similar operations by different IHs. The following example indicates a failure associated with the absence of decision logic:

Example: Tank Farm Work Instruction WDL#111243, dated December 12, 2008, calls for the monitoring of organic and ammonia vapor, yet provides action levels for the described task as follows:

- Organic Vapors 2 ppm
- Ammonia 12 ppm
- Formaldehyde 0.2 ppm

The following failures occurred:

1. Formaldehyde cannot be detected by the prescribed instruments*.
2. Formaldehyde, by virtue of multiple toxicological risks, including carcinogenicity, irritation, and pulmonary sensitization, is a priority COPC, as evidenced by the lowest OEL.
3. Yet, the document fails to identify that the formaldehyde OEL is a ceiling value, meaning that an exposure of 0.3 ppm is not to be exceeded. This is a contradiction to the WRPS IH Exposure Assessment Plan (3.11) that mandates screening COPCs and controlling exposure to below 50% of the OEL. Not only is the action level above 50%, these action levels are intended for time weighted average exposures – not ceiling limits, which could instantaneously be exceeded.

*ORP confirmed that formaldehyde is a not COPC to be monitored at this location per the TVIS, and reference was mistakenly made on this work instruction.

ORP confirmed that formaldehyde is not a COPC to be monitored at this location, per RPP-RPT-29262, A-Prefix Tank Farms Vapor Hazard Characterization Report, Revision 0 and this reference was a quality assurance error on the work instruction, not a technical omission.

The WRPS IH technical basis does not offer a clear, documented decision logic and justification for utilizing or not utilizing DRIs for assessing possible excursions of exposure above baseline personal exposure data, as stated in Section 3.11 of TFC-PLN-34, Revision D-2, "IH Exposure Assessment Strategy." This plan does identify in Attachment E, a series of factors to be considered in the establishment of DRI action limits, and states: "The Safety and Health Director will review current screening action levels for appropriate conservatism," - a reference to professional judgement. Therefore, in the absence of decision logic, a review was conducted of the flow down of documents on this subject, which included the Tank Farm Chemical Exposure Hazard Analysis (series of reports), Tank Farms Vapor Characterization Report (series), Management of Vapor Control Zones, Instrumentation instructional documents (series), Fact Sheet:

"Monitoring for COPCs in the Tank Farm," and representative IH Monitoring and Sampling Plans, and Work Hazard Analysis documents. Questions that remain, would then include: Which Volatile Organic Compounds (VOC) are detected within the range and sensitivity of a 10.6 ev Photo Ionization Detector and which are not? When is a flame ionization detector then used and for what sub section of the COPCs? What common non VOCs such as N-Nitrosomethylethylamine, nitrous oxide, and mercury are not being monitored and why not? Are correction factors applied to combustible gas indicators calibrated with isopentane, but used primarily for hydrogen monitoring? What are the margins of error and interfering compounds to be considered for use of DRIs? These elements of the IH Exposure Assessment strategy appear to be absent. ORP recognizes that DRIs are an important element of the overall strategy, and that there are limitations in their application; however, the process of determining the use, limitations, and associated applications must be documented, to support designated use.

Formaldehyde has a ceiling value (not to be exceeded) of 3 ppm, but a WRPS action level of 2 ppm. The accuracy of the detector tube may range from +/- 35% to +/- 50%, which indicates that ceilings could be exceeded before actions are initiated. In addition, detector tubes are cumbersome, time consuming to operate, and difficult to read. The logistics of the DRI sampling and the margin of error suggest that either the action level or the mode of DRI sampling may not have been subjected to the same decision logic as other COPCs, indicating inconsistency.

3.3 STAFF QUALIFICATIONS

WRPS has an extensive staff of 54 IH professionals, which includes 3 managers (of which one is certified in IH), 9 industrial hygienists (of which 5 are certified in IH) and 32 IHTs, who are represented under the collective bargaining agreement.

There are qualifications standards which identify baseline requirements and responsibilities for IH Professional (TFC-BSM-TQ-STD-01, "Technical Staff Qualification Requirements") and IHT (TFC-BSM-TQ-STD-07, "Industrial Hygiene Technician Training and Qualification Requirements.") In addition, WRPS maintains both IH and IHT qualification cards (350882, "Qualification Card for Industrial Hygiene Professional," Revision 0804.1 and 350292, "Qualification Card for TOC Industrial Hygiene Technician," Revision 0608.1). The process does not separately address specialty positions such as the IHT Lead nor does it address any special requirements for the IHT responsible for being the IH equipment custodian or respiratory protective equipment custodian.

The IH professional qualifications standard and process is relatively rigorous. The IH professional qualification process is primarily directed at having a Bachelors degree in IH or related science, two years of IH experience and one year of IH experience in the nuclear industry or equivalency; plus extensive required reading, self-study and procedural

orientation. The IH professional is required to obtain 24 hours of continuing education per year. A majority of the IH professionals on staff hold current certifications through the American Board of Industrial Hygiene (ABIH). A sample review of completed IH professional qualification card was not part of the scope of Phase I of the assessment.

The IHT qualification process requires an Associate Degree in safety and health technology, applied science or related science, one year job related experience or equivalent combination of education and experience plus extensive in-house training on fundamentals and instrumentation. The IHT process does include hands on training in the classroom and periodic updates on seldom used instruments. Sample observations of IHT process qualification or requalification was not part of this assessment, but will be part of the Phase II assessment.

Feedback from group interviews involving 31 of the 54 IH professional staff found them to be very aware of the Tank Farm IH issues. The majority of the IH professionals on staff have extensive commercial and DOE Complex experience in the subject areas of the assessment. The IH professional staff was very open and provided their candid professional opinion of the current WRPS IH program and areas for possible improvement (e.g., training). A common questioned asked by the Assessor's during the interviews were on the subject of level of effort expended on tank farm vapor sampling – over board, too little or just right. The consensus was that the vapor sampling was larger then should be in relationship to the commercial industry but it was understood and accepted. The morale of the IH Professional staff seems to be holding up during the last few years both CH2M HILL/WRPS have been able to maintain a high level IH staff (it should be noted a current WRPS employee is going to take part one of the ABIH certification process this coming June). There was common consensus among the WRPS IH professional staff that there is generally room for improvement of the program but no other portion of the IH program is Less Than Adequate due to the attention being given to the Tank Farm vapor issue. Another common question asked by the Assessor's during the interviews was in regards to the nature of interface or projects which ally the fear of workers and result in a prudent level of risk information regarding Tank Farm vapor issues; for which several interfaces were described including the Chemical Vapor Solutions Team, Presidents Council, and Chemical Hazard Awareness Training. However, it appears a sustained effort to provide risk information to workers about historical and ongoing sampling results, including IH instrument capabilities and limits in relation to the radiological instrumentation has not been accomplished.

The control of IHT field data forms, Chain of Custody (COC), conveyance to IH records, management of sampling data, and distribution of employee occupational exposure notification is controlled by TFC-ESHQ-S_IH-C-46, "Industrial Hygiene Reporting and Records Management," Revision B-1. The electronic record copy of sampling is maintained on the Tank Farm Industrial Hygiene (TFIH) database from transposed field notes and backed up every evening on hard drive. During discussions with the first group of IHT it was very clear they understood the rules of COC. The ORP field observations of sampling taken by IHTs and conveyance of the sample media through processing and records management will be a portion of the Phase II assessment. Interviews with the WRPS personnel responsible for maintaining the TFIH database appear to be well versed in the capability of

TFIH database and associated software. The TFIH database software is currently maintained by Lockheed Martin Services, Inc.

A majority of the IHT have at least five or more years experience working as IHT in Tank Farms or at the Hanford Site. Based on interviews the IHTs who have responsibility as the IH equipment custodian and respiratory expert have extensive knowledge (both have over 20 years Hanford experience) of their respective fields and were able to discuss in adequate detail technical subjects of their respective assigned job areas. One follow up question to WRPS management was on the succession planning in case either IHT decides to retire, the feedback provided was that the respiratory protection program is well covered but given the technical complexity of the IH equipment custodian duties, there were succession issues which are being actively pursued. The Field IHTs appear to have an adequate understanding of the basics of the most commonly used IH instruments. Based on response to questions, the IHT provided a mixed response to the ease of use of IH procedures and sampling plans, on occasion a work pause was needed for clarification. Another common theme among the IHT, was there was different responses based on the same vapor hazard between Base Operations, Single-Shell Tank (SST) Retrieval, and Closure, including the area of down posting a Vapor Control Zone. Not all IH sampling plans require personnel monitoring/sampling in the absence of it being mandated as part of the work task. There is a general reluctance for worker's to wear the sampling apparatus on a voluntary basis, as there is a complaint of it being cumbersome.

3.4 Program Management

The WRPS IH Management efforts address a cadre of departmental elements such as staff training, budgeting, data management, quality assurance, scheduling, review and updating of written programs, and strategic planning. WRPS IH program management is centered within the ESH&Q group of WRPS, although the majority of IH personnel are deployed to Base Operations or SST Retrieval and Closure for operational support. The IH program manager is a Certified Industrial Hygienist and responsible for central functions such as program metrics, data management, technical basis risk assessments, and primary procedural components.

3.4.1 Goals, Metrics and Trends Analysis

The current state of the sample data is relatively unprocessed, other than through the tracking of constituent results above the 10% and 50% OEL status for existing COPCs. However, WRPS is currently in the process of re-assessing the baseline data acquired. As part of this effort, they are planning the consolidation of the data, in a manner which allows for the assessment of both the statistical approach to be used in a re-characterization of potential exposures and in the identification of data gaps. This effort will in turn, drive the number and location of additional screening and routine monitoring efforts. The methodology will reportedly be developed in conjunction with an independent expert IH panel.

There is an ongoing effort to consolidate data and assimilate upward or downward trends in other IH program elements such as hearing conservation, non-ionizing radiation, heat stress, cold stress, and ergonomics. It is noteworthy that WRPS IH managers and staff appear to agree per interviews, that the vapor control program has monopolized their resources and there is some frustration that: 1) they have exceeded industry standards in addressing the concern; 2) there is no serious vapor health threat; and 3) other programmatic areas of need are not being addressed as they would prefer.

Example of WRPS Sampling Strategy under consideration

Frequency of sampling (low-high)

Carcinogen	H	H	H
Highly Toxic	M	H	H
Irritant	L	M	H

% of OEL----------›

3.4.2 The Role of Professional Judgment

WRPS points out that it maintains a high caliber of staff and that professional judgment is a necessary element to the program. In the factual accuracy response, WRPS states: "The American Conference of Governmental Industrial Hygienists and the American Board of Industrial Hygiene both recognize that professional industrial hygienists must evaluate data and information and make professional judgments."

ORP recognizes not only the value, but the necessity of professional judgment - particularly in the event of off normal operations. Such judgments is based not only on training and experience, but also on baseline programmatic guidelines that have been reviewed, approved, and incorporated into the programmatic foundation of the health and safety program. It is neither feasible nor desirable to attempt to dictate directives for variables that occur with environmental and operational dynamics. However, the fundamental methods in which decisions will be made, in a consistent, defensible mode is essential to the credibility of the program. As an example, NIOSH, arguably the international subject matter expert on respiratory devices devotes 41 pages to the process

of respirator selection in the "NIOSH Guide to Industrial Respiratory Protection." A professional judgment is required in the understanding and application of this document. However, the narratives, checklists and flow charts are provided to "insure uniformity and adherence" to established methods established jointly by NIOSH and the Occupational Safety and Health Administration (OSHA). Similar guides, established as industry standards are available for the selection of CPC, eye protection and other PPE elements. All of these guides require professional judgment in the application process, with respect to the vast mixture of COPCs and environmental conditions. What is missing from WRPS is clearly stated policies with respect to: 1) the need; 2) the application; 3) WRPS inventory or options available; and 4) standard methods for decision making.

ORP acknowledges that WRPS has some elements of the selection process incorporated into programmatic documents, such as a discussion of the service life of respirator cartridges and an extensive study on the application of silver shield® gloves and mercury exposure. Yet, there are major elements missing and most importantly, no standard means of directing the use of those elements in a cohesive fashion, and there is no defined process for documenting the basis for the decisions made in the absence of standard methodologies.

The same is true with respect to broad range DRIs. Table 1 of the "Monitoring for COPC in Tank Farm Vapors" list instruments that respond to multiple COPCs, but does not address the means of discriminating amongst those with very low TLVs and those that have high TLVs. There appears to be a mandate for utilizing detector tubes for some, and broad range instruments such as the TVA and ppbRAE for others. Some COPCs appear to be monitored by either option. The argument of utilizing professional judgments for the selection of instruments is only defensible, in the presence of a sound technical basis, which provides each IH with the pre determined range, sensitivity, correction factors and unknowns associated with the DRI table. To assume that each IH has performed this task independently in a correct, consistent manner and maintains the basis for the decision logic is not prudent. In addition, there is no evidence to suggest that such factors and thought process, are in turn, documented with each work instruction or operational document.

The level of effort required to either: 1) provide pre established decisions for PPE and DRIs for the waste and condensate per Tank farm; or 2) to provide decision logic directly, with the aid of internet links is minimal. To have this fundamental element absent from both a written PPE plan and sampling strategy plan is not the industry norm.

4.0 CONCLUSIONS

4.1 Positive observations and trends

- The breadth and detail of most programmatic WRPS IH documents is very good.
- The effort on evaluating baseline chemical hazards has been very advanced.

- The program for control, conveyance, and management of sampling data appears to be exceptional.

- The WRPS Staff offers considerable experience, held to high qualification standards, self-confident and professional.

- The WRPS IH related instrumentation, data base, and overall resources are exceptional.

- WRPS is upgrading risk communication process, including the use of outside subject matter experts.

- WRPS is pro actively supporting an independent panel for additional vapor monitoring and control considerations.

- WRPS is reportedly improving worker access to material safety data sheets through the establishment of an electronic on-line Material Safety Data Sheets program. This action appears to be prompted by two observations that result from the WRPS self-assessment, finalized on January 19, 2009.

4.2 Opportunities for Improvement

- The compendium of IH Information and directives could be consolidated for IH and workers, in a manner more easily acquired and understood.

- WRPS should incorporate exposure characterization and control goals and objectives into the IH technical basis.

- WRPS should define the range for professional judgment within the IH program to a reasonable extent within the technical basis documents.

- WRPS should review and evaluate worker occupational illness reporting as an element of the hazard identification and assessment process, per 10 CFR 851.21(7) and 10 CFR 851.26 94)(b). The consideration of reported target organ or systemic effects and related causative agents within the tank farm may be an important added element of the IH strategy. The overall goal of the compliance with this requirement being the evaluation of reports in a manner which allows reconsideration of the effectiveness of current protective measures with regards to the monitoring and control strategy. For example, in the event that asthma and related reactive airways disease is identified as a complaint of tank farm workers and recognizing that formaldehyde [a COPC] has a causal link to asthma, special consideration may then be directed at increasing the nature and frequency of formaldehyde monitoring.

4.3 Assessment Follow-up Items

As part of a future assessment (Phase II), actual field implementation of the documented WRPS IH program will be evaluated with special emphasis on:

- Observations of IH Technicians going through re-qualification or initial qualification, actual sampling (source, personnel, or area) and processing of sample media for laboratory analysis and execution of the Work Instructions/Job Hazard Analysis (TFC-ESHQ-S_SAF-C-02, "Job Hazard Analysis," Revision D-5). The IH Professionals qualification card process consists mostly of required reading with some actual case studies like assigning DRIs and sample data analysis.

- Per several months of observation, formal interviews, and review of one off-normal event (702-AZ); there is a general concern that the prevailing opinion within the WRPS IH department, that Tank Farm static chemical vapor and condensate exposures are fully characterized and controlled, is having negative impacts the degree of WRPS vigilance in anticipating, preparing for, and responding to off-normal events and secondarily, assessments of new or improved control measures. As part of Phase II the assessors will perform field assessment of drills for off-normal waste release and actual should any should occur.

- The process of decision making in regards to PPE and instrumentation shall be closely evaluated.

- The monitoring, controls and associated documentation of off-normal event decision making.

- The effectiveness of the sample and data quality assurance process.

- The nature of the safety culture within WRPS.

5.0 FINDINGS AND OBSERVATIONS

5.1 Findings

A-09-ESQ-TANKFARM-001-F01: Contrary to requirements WRPS has not established and implemented programmatic procedures which evaluate and introduce new technologies into the WRPS ESH&Q Assurance group, nor IH program. WRPS has clear evidence that portions have been made, such as the addition of upgraded IH instrumentation. A formal and concerted effort to periodically evaluate new technologies for worker health and safety is an important, but missing feature of this high end health and safety program.

Requirements:

29 CFR 1910.120(p)(5), "New Technology Program" The employer shall develop and implement procedures meeting the requirements of paragraph (o) of this section for introducing new and innovative equipment into the workplace.

1910.120(o)(1): The employer shall develop and implement procedures for the introduction of effective new technologies and equipment developed for the improved protection of employees working with hazardous waste clean-up operations, and the same shall be implemented as part of the site safety and health program to assure that employee protection is being maintained.

1910.120(o)(2): New technologies, equipment, or control measures available to the industry, such as the use of foams, absorbents, neutralizers, or other means to suppress the level of air contaminants while excavating the site or for spill control, shall be evaluated by employers or their representatives. Such an evaluation shall be done to determine the effectiveness of the new methods, materials, or equipment before implementing their use on a large scale for enhancing employee protection. Information and data from manufacturers or suppliers may be used as part of the employer's evaluation effort. Such evaluations shall be made available to OSHA upon request.

Discussion:

WRPS has not established and implemented programmatic procedures which evaluate and introduce new technologies into the WRPS ESH&Q Assurance group, nor IH program. There is clear evidence efforts have been made, such as the addition of upgraded IH instrumentation. However, given the history of the tank farm vapor exposure monitoring & controls challenges and the history of abnormal events, a formal and concerted effort to periodically evaluate new technologies for worker health and safety is an important, but missing feature of this high end health and safety program.

A-09-ESQ-TANKFARM-001-F02: Contrary to requirements WRPS has not established written, comprehensive decision logic for the selection and use of PPE. WRPS has developed risk assessment documents, as well as a respiratory protection plan and PPE plan. However, there are no defined action levels and selection criteria available for review for respiratory protective equipment, CPC, nor chemical protection of the eyes; and there is no element that addresses the selection process or protocol of use for an emergency response.

Requirements:

29 CFR 1910.132(d): Hazard assessment and equipment selection.

29 CFR 1910.132(d)(1): The employer shall assess the workplace to determine if hazards are present, or are likely to be present, which necessitate the use of PPE. If such hazards are present, or likely to be present, the employer shall:

29 CFR 1910.132(d)(1)(i): Select, and have each affected employee use, the types of PPE that will protect the affected employee from the hazards identified in the hazard assessment;

29 CFR 1910.132(d)(1)(ii): Communicate selection decisions to each affected employee;

29 CFR 1910.132(d)(2): The employer shall verify that the required workplace hazard assessment has been performed through a written certification that identifies the workplace evaluated; the person certifying that the evaluation has been performed; the date(s) of the hazard assessment; and, which identifies the document as a certification of hazard assessment.

29 CFR 1910.134(c) (1): In any workplace where respirators are necessary to protect the health of the employee or whenever respirators are required by the employer, the employer shall establish and implement a written respiratory protection program with worksite-specific procedures... The employer shall include in the program the following provisions of this section, as applicable:

29 CFR 1910.134(c)(1)(i): Procedures for selecting respirators for use in the workplace;

29 CFR 1910.120(p)(8): Elements of an emergency response plan. The employer shall develop an emergency response plan for emergencies which shall address, as a minimum, the following areas to the extent that they are not addressed in any specific program required in this paragraph.

29 CFR 1910.120(p)(8)(ii)(K): PPE and emergency equipment (other items not included).

Discussion:

WRPS has developed risk assessment documents, as well as a respiratory protection plan and PPE plan. However, there are no defined action levels and selection criteria available for review for respiratory protective equipment, CPC, nor chemical protection of the eyes; and there is no element that addresses the selection process or protocol of use for an emergency response. In addition, there is an absence of service life criteria for CPC. The absence of a decision process or a documented, designated CPC material extends beyond the chemical oriented elements of the program and includes a deficiency in the Bloodborne Pathogen Exposure Control Plan. These items are of the most basic type of information to be made available to workers through the written safety and health program. A number of IH documents make reference to consulting the IH, deferring to the IH "professional judgment."

A-09-ESQ-TANKFARM-001-F03: There is a lack of specified criteria in the selection of direct reading air monitoring instrumentation and interpretation of results. There is an absence of specific methodology on the selection and interpretation of nine or more different DRI used to monitor for the acute hazard of COPC. Such DRI warrant both clear decision logic for selection and instructions of interpretation relative to other instrument readings. The results associated with the lack of written guidance and criteria was manifested in the WRPS response to the 222-S methylene chloride spill, in which the 10.6 ev Photoionoization

detector was used in error, as the basis for the release of the work area. The manufacturer's literature clearly identifies that this instrument does not detect a chemical such as methylene chloride, which has an ionization potential higher than 10.6 ev.

Requirement:

10 CFR 851.21, "Hazard Identification and Assessment"

(a) Contractors must establish procedures to identify existing and potential workplace hazards and assess the risk of associated workers injury and illness. Procedures must include methods to: Assess worker exposure to chemical, physical, biological, or safety workplace hazards through appropriate workplace monitoring;

Discussion:

Despite considerable attention to COPC, air monitoring strategies, and instrument operation, there is an absence of specific methodology for the selection and interpretation of the nine or more different DRI used to monitor for the acute hazard COPC (as listed in EH-06-004). Selection and data interpretation of some DRI such as the use of the iTX ammonia meter for ammonia measurement is self-evident. However, other DRI such as the ppbRAE, the Miran 205B, and the TVA-1000 respond to multiple chemicals at different sensitivities and react to multiple interfering compounds. Such DRI warrant both clear decision logic for selection and instructions of interpretation, relative to other instrument readings. In addition, there is no direction provided for the use of detector tubes with regard to the same. Such reliance on "Professional Judgment," at this significant level of decision making creates the potential for errors, departmental inconsistency, an absence of written documentation, and an inability to audit program performance against standardized procedures.

A-09-ESQ-TANKFARM-001-F04: There is an absence of written direction to incorporate the mandated goal of reducing worker exposure to carcinogens and all chemicals to levels ALARA, below the TLV.

Requirements:

10 CFR 851, 10 CFR 851.21, and 10 CFR 851.23 The 2005 ACGIH TLV booklet states "...carcinogens, worker exposure by all routes should be carefully controlled to levels as low as possible, below the TLV"

10 CFR 851.21(4), "Hazard Identification and Abatement," that the "contractor must analyze designs of new facilities and modifications to existing facilities and equipment for potential workplace hazards" and 10 CFR 851.22, "Hazard Prevention and Abatement," contractors must establish and implement a hazard prevention and abatement to ensure...

DOE Standard 1189-2008, "Integration of Safety into the Design Process" – Section 7.10, "Hazardous Material," similar to radiological hazards, DOE requirements invoke an ALARA concept for the protection of workers from hazardous materials. Design should support the

primary objective of reducing the frequency, severity, and cost of incidents involving hazardous material, as well as the cost of hazardous operations. Prevention practices, such as substitution of less hazardous materials in a project or design of a process to reduce generations of hazardous waste, should be examined prior to consideration of protection strategies. Protection strategies will generally involve confinement strategies, such a gloveboxes, piped systems, and tanks, as well as administrative controls. The approach will typically be driven by the magnitude of the hazard and inventory. Similar to radiological hazards, DOE requirements invoke an ALARA concept for the protection of workers from hazardous materials.

DOE-STD-3009-94, "Preparation Guide for U.S. Department of Energy Non-Reactor Nuclear Facility Documented Safety Analyses," Chapter 8, "Hazardous Material Protection"

8.4 ALARA POLICY AND PROGRAM (DOE-3009-94)

This section summarizes the ALARA policy and program for the facility. Historically, hazardous materials, unlike radioactive materials, have often been evaluated assuming de-minimis level below which little harm is associated with exposures (e.g., OSHA PELs). Where this is the case for given subject matter, ALARA needs to be considered a qualitative concept evaluated against OSHA and IH exposure standards and guidelines.

8.4 ALARA POLICY AND PROGRAM (TF DSA)

The hazardous material protection program ensures that exposures to hazardous materials are below regulatory limits and at a level ALARA. ALARA concepts are employed at the tank farms for hazardous material protection. The goal of ALARA is to reduce the level of hazardous materials and the effects of those materials at the source, and thereby mitigate any effects on workers, the environment, or the public. ALARA also ensures that exposures are kept to the lowest levels and within the limits set by governing authorities (i.e., OSHA PELs, ACGIH TLVs, and DOE directives). Procedures, instructions, and standards ensure exposures are kept to a minimum based on the requirements and provisions of DOE Orders, OSHA regulations, national consensus IH standards, and recommended practices. The IH programs pertaining to hazardous material protection at the Tank Farm Contractor (TFC) facilities utilize elimination/substitution of materials, engineered controls and features, administrative controls, and PPE.

To minimize the use of, and exposure to, hazardous materials, purchase requisitions are reviewed for products that contain or that may result in the production of hazardous chemicals; where possible, less hazardous materials are substituted. In addition, the TFC oversees contractor and subcontractor construction activities at TFC facilities to minimize exposures to hazardous materials through worksite inspections following the requirements of DOE O 440.1A.

5.2 Observations

A-09-ESQ-TANKFARM-001-O01: There is a lack of clear, consolidated information the WRPS IH technical basis is overly complicated and confusing to both workers and outside viewers. There are a number of significant conflicting statements regarding such important elements as PPE and air monitoring requirements. In addition, there are numerous links within key documents that refer the reader to a secondary set of documents, which in turn refer the reader to a tertiary set of documents.

Discussion:

The WRPS IH Technical Basis is overly complicated and confusing to both workers and outside viewers. There are a number of significant conflicting statements regarding such important elements as PPE and air monitoring requirements. In addition, there are numerous links within key documents that refer the reader to a secondary set of documents, which in turn refer the reader to a tertiary set of documents. Another concern is the listing of extensive readings for the implementation of a single IH task of noise dosimetry (TF-OPS-IHT-0015), which states "the following documents may be needed to perform this procedure" then lists 16 major documents, including TLV books, CFR, American National Standards Institute (ANSI) docs, and others.

Assessment Follow-up Items

A-09-ESQ-TANKFARM-001-AFI01: There is a WRPS IH consensus that the tank farms vapor hazards is static and fully characterized, which results in a WRPS IH Departmental mentality that limits vigilant assessment of day-to-day considerations of abnormal events, assessment of new or improved control measures; and interpretation of results. In follow up assessment (Phase II), the following subject areas will be looked at: The nature of the safety culture within WRPS, observations of IH Technicians going through re-qualification or initial qualification, actual sampling (source, personnel, or area), the processing of sample media for laboratory analysis and execution of the Work Instructions/Job Hazard Analysis, field observations of drills for off-normal waste release (and actual should any occur), the monitoring, controls, and associated documentation of abnormal event decision making, and effectiveness of in field sample and data quality assurance process.

6.0 REFERENCES (From DOE Standard IH Practices, DOE-STD-6005-2001 April 2001)

6.1 Government Documents

DOE Directives (Policy, Orders, Handbooks, and Technical Standards)

a. CFR 1910 Part 851 Replacing DOE O 440.1A, Worker Protection Management for DOE Federal and Contractor Employees.

b. DOE O 450.4. Safety Management System Policy.

c. DOE O 450.5. Line Environment, Safety, and Health Oversight.

d. DOE G 440.1-1, Worker Protection Management for DOE Federal and Contractor Employees Guide for Use with DOE O 440.1.

e. DOE G 440.1-2, Construction Safety Management Guide for Use with DOE O 440.1.

f. DOE G 440.1-3, Occupational Exposure Assessment, Implementation Guide for Use with DOE O 440.1.

g. DOE G 440.1-4, Contractor Occupational Medical Program Guide for Use with DOE O 440.1.

h. DOE G 440.1-7, Implementation Guide for Use with DOE N 440.1-7, Interim Chronic Beryllium Disease Prevention Program.

i. DOE Standard 1189-2008, "Integration of Safety into the Design Process."

j. DOE Standard 3009, Preparation Guide for U.S. Department of Energy Non-Reactor Nuclear Facility Documented Safety Analyses

k. GUIDES: DOE G 441.1-2 Occupational ALARA Program Guide

DOE-STD-6005-2001 2 i. DOE O 5480.10A, Contractor IH Program.

- **Other Government Documents**

a. U.S. Department of Labor, OSHA, "Field Inspection Reference Manual."

b. U.S. Department of Labor, OSHA, "Technical Manual."

c. U.S. Department of Labor, OSHA, Title 29 CFR, Part 1910, Occupational Safety and Health Standards, and Part 1926, Safety and Health Regulations for Construction.

d. U.S. Department of Labor, OSHA, Title 29 CFR, Part 1960, Basic Program Elements for Federal Employee Occupational Safety and Health Programs and Related Matters.

6.2 Non-Government Documents

a. ACGIH, "Threshold Limit Values for Chemical Substances and Physical Agents and Biological Exposure Indices" (Latest edition).

b. American Conference of Governmental Industrial Hygienists, "Industrial Ventilation: A Manual of Recommended Practice" (Latest edition).

c. Joseph Damiano and John R. Mulhausen (Editors), "A Strategy for Assessing and Managing Occupational Exposures," 2nd edition. AIHA, Fairfax, VA (1998)

d. Salvatore R. DiNardi, (Editor), "The Occupational Environment. Its Evaluation and Control," AIHA, Fairfax, VA (1997)

e. ANSI, latest version of various standards including, but not limited to:
   1. ANSI Z 88.2, .Respiratory Protection.
   2. ANSI Z 88.6, .Physical Qualifications for Respirator Use.
   3. ANSI Z 117.1, .Safety Requirements for Working in Tanks and Other Confined Spaces.
   4. ANSI Z 136.1, .Safe Use of Lasers.
   5. ANSI Z 358.1, .Emergency Eyewash and Shower Equipment.

f. American Society of Heating, Refrigerating, and Air Conditioning Engineers, "ASHRAE Handbook and Product Directory," volume on Fundamentals.

6.3 Personnel Interviewed

6.3.1 WRPS ESH&Q Safety and Health Manager

6.3.2 WRPS ESH&Q Business Operations Industrial Safety/IH Manager

6.3.3 WRPS ESH&Q Business Operations IH Manager

6.3.4 WRPS SST Retrieval & Closure Safety and IH Manager

6.3.5 WRPS Industrial Hygienists (7 total)

6.3.6 WRPS Industrial Hygiene Technicians (20 total)

6.4 Documents Reviewed

6.4.1 Integrated Environment, Safety, and Health Management System Description for the Tank Operations Contractor, RPP–MP-03

6.4.2 Worker Health and Safety Requirements Implementation Matrix, TFC-ESHQ-S SAF-CD-11

6.4.3 Worker Health and Safety Program, TFC-PLN-47, RPP-27195

6.4.4 Industrial Hygiene Safety Management Program Plan TFC-PLN-55

6.4.5 Tank Operations Contractor Health and Safety Plan TFC-PLN-43, Revision A-12

6.4.6 IH Exposure Assessment Strategy RPP-27195 TFC-PLN-34 R-D-2

6.4.7 Beryllium TFC-PLN 24

6.4.8 ASBESTOS PROGRAM, RPP-MP-625, Revision

6.4.9 Risk Management Plan TFC-PLN-39 Revision C

6.4.10 Emergency Management Program Plan TF-PLN-85

6.4.11 Tank Farm Contractor Training and Qualification Plan TFC-PLN-64

6.4.12 Technical Staff Qualifications Requirements USQ-GCX-2

6.4.13 IH Tech and Qualifications Requirements TFC-BSM-TQ STD-07 RC

6.4.14 Subcontractor Oversight ESH&Q TFC-ESHQ-S_SAF-C-07, Revision B-5

6.4.15 EMPLOYEE JOB TASK ANALYSIS TFC-ESHQ-S_IH-C-17, Revision B-3

6.4.16 IH Deports and Documents (Safety & Health Programs-web page) Dermal Exposure Study & Waste Disturbing Activities Vapor Characterization.

6.2.17 IH Reporting & Records Management TFC-ESHQ-S_IH-C-46

6.2.18 Managing Vapor Control Zones TFC-ESHQ-S_IH-C-48

6.2.19 Chemical Management Process TFC-ESHQ-S_IH-C-47

6.2.20 Industrial Hygiene Alarm Response TFC-ESHQ-S_IH-C-45

6.2.21 TF Chemical Exposure Hazard Analysis (Safety & Health Programs-web page)

6.2.22 Exposure Monitoring, Reporting, and Records Management TFC-ESHQ-IH-STD-03

6.2.23 Industrial Hygiene Response to Vapor Concerns TFC-ESHQ-IH-STD-09

6.2.24 Industrial Hygiene Equipment Management TFC ESQC_H- S PI 11

6.2.25 Industrial Hygiene Response to Employee Contact with Chemical Waste TFC-ESHQ-IH-STD-10

6.2.26 Industrial Hygiene Chemical Vapor Technical Basis RPP-22491, R1

6.2.27 Tank Waste Dermal Exposure Assessment RPP-34147, R O

6.2.28 Concentrations of Chemicals of Potential Concern in Water and Organic Condensates PRR-RPT-24794, R 1

6.2.29 Respirator Issuance and Control ProcessesTFC-ESHQ-S_IH-CD-05.1

6.2.30 Personal Protective Equipment TFC-ESHQ-S_IS-C-02

6.2.31 Blood borne Pathogen Exposure Control Standard TFC-ESHQ-S-24

6.2.32 INDUSTRIAL HYGIENE INSTRUMENT ALARM RESPONSE TFC-ESHQ-S_IH-C-45, Revision A-1

6.2.33 Response to Reported Odors or unexpected Changes to Vapor Conditions, TF Abnormal Operating Procedures:

6.2.34 Evaluation and Procurement of Industrial Hygiene Monitoring Instruments TFC-ESHQ-S_IH-CD-38

6.2.35 3M Breathe Easy Powered Air Purifying Respirator Test and Maintenance TFC-ESHQ-S_IH-D-05.2

6.2.36 MSA OptimAir 6A Powered Air Purifying Respirator Test and Maintenance TFC-ESHQ-S_IH-D-05.3

6.2.37 Using the TVA 1000B Toxic Vapor Analyzer TFC-ESHQ-S_IH-D-25

6.2.38 Tank Vapor Source Monitoring TFC-ESHQ-S_IH-D-27

6.2.39 Permit Required Confined Space TFC-ESHQ-S_IH-C-04, Revision C-2

6.2.40 MIRAN 205B Series SapphIRe Instrument OperationTFC-ESHQ-S_IH-D-32

6.2.41 Noise Surveys, Dosimetry, and Octave Band AnalysisTFC-ESHQ-S_IH-D-34

6.2.42 Hazard CommunicationTFC-ESHQ-S_IH-C-02

6.2.43 COC and Submitting Samples for Laboratory Analysis TFC-ESHQ-S_IH-P-10

6.2.44 Ergonomics TFC-ESHQ-S_IH-STD-03

6.2.45 Cold Stress TFC-ESHQ-IH-STD-01

6.2.46 Heat Stress Control TFC-ESHQ S IH C -07

6.2.47 Laser Safety and Nonionizing Radiation TFC-ESHQ-IH-STD-02

6.2.48 Asbestos Control - Facility Management/General Industry TFC-ESHQ-IH-STD-04

6.2.49 Hearing Conservation Program TFC-ESHQ-IH-STD-06

6.2.50 Lead Control Program TFC-ESHQ-IH-STD-08

6.2.51 Carcinogen Control TFC-ESHQ-IH-STD-11

6.2.52 Industrial Hygiene Monitoring and Control Strategies During Tank Retrieval and Transfers TFC-ESHQ-IH-STD-12

6.2.53 Illumination TFC-ESHQ-IH-STD-13

6.2.54 IHT Flammable Gas Surveillance on Double Shell Tanks TF-OPS-IHT-00

6.2.55 Perform IHT Flammable Gas Surveillance on Single Shell Tanks TF-OPS-IHT-002

6.2.56 Preparation and Field Use of Multi-Gas Monitor Model TMX412 TF-OPS-IHT-003

6.2.57 Preparation and Field Use of iTX Multi-Gas Monitor and iSP Motorized Sampling Pump TF-OPS-IHT-004

6.2.58 Preparation and Field Use of the ppbRAE Volatile Organic Compound Monitor TF-OPS-IHT-005

6.2.59 Preparation and Field Use of Drager Accuro and Accuro 2000 Pump and Colorimetric Indicator TF-OPS-IHT-006

6.2.60 Using DRIs TF-OPS-IHT-007

6.2.61 Using The Sper Scientific Light Meter TF-OPS-IHT-008

6.2.62 IH Pump Preparation and field Use for Personal-Area Air Monitoring TF-OPS-IHT-009

6.2.63 Field Wipe Sampling and Bulk Sampling Methods TF-OPS-IHT-0010

6.2.64 Preparation and Field Use of the AreaRAE Multi-Gas Monitor TF-OPS-IHT-0011

6.2.65 Preparation and Field Use of the QUESTemp 15 and QUESTemp 32 Heat Stress Monitors TF-OPS-IHT-0012

6.2.66 Preparation and Field Use of the Lumex Ra-915+ Mercury Vapor Analyzer TF-OPS-IHT-0014

6.2.67 Preparation and Field Use of the Quest Q300 Noise Dosimeter and 2900 Sound Level Meter TF-OPS-IHT-0015

6.2.68 Preparation and Field Use of the Manning EC-P2 Ammonia Monitor TF-OPS-IHT-0016

6.2.69 Performance Indicators (H&S Web)

6.2.70 IH Exposure Assessment strategy TFC PLN-34, Revision D-2, Section 3.4

6.2.71 WRPS Health and Safety Tool Box Web Page: multiple fact sheets, data sheets, information sheets, analysis and reports.

APPENDIX A – PRINCIPAL DOCUMENT REVIEW AND COMMENTS

Document Name	Document Identifier	Comments
PRIMARY DOCUMENTS		
Integrated Environment, Safety, and Health Management System Description for the Tank Operations Contractor	RPP –MP-03	Baseline ISM
Worker Health and Safety Requirements Implementation Matrix	TFC-ESHQ-S_SAF-CD-11	-Excellent tool.
Worker Health and Safety Program	TFC-PLN -47 RPP-27195	-Does not address New Technology Program -Organizational Roles and Responsibilities element is difficult to access -Medical Surveillance Program is vague
Industrial Hygiene Safety Management Program Plan	TFC-PLN-55	-Calls for a target of 3 IH field Inspections per week -No new technology review process -No element of metrics or corrective action elements
Chemical Hygiene Plan		To be addresses as part of the ATL assessment
Tank Operations Contractor Health and Safety Plan	TFC-PLN-43, REV A-12	-Scope is to be "compliant with 29 CFR 1910.120" -Scope includes (…"facility workers protected from unplanned releases of radioactive and hazardous materials)" -Unsuccessful in accessing WRPS Org Chart via cited web link -Does not address New Technology Program -Document contains cited links and over 200 secondary links contained in those documents - 4.2.1 No discussion of administrative controls -4.6 BBP program is non compliant (see that line item) -6.0 Contamination Control is radiation oriented no direction on chemical decontamination? - Medical surveillance does not address IH interactions with Medical contractor following uncontrolled exposures (EJTA is primary tool for ongoing surveillance).
IH Exposure Assessment Strategy	RPP-27195 TFC-PLN-34 R D-2	Lacks specific methodologies and decision making for use of DRIs, despite general directives provided.
Beryllium	TFC-PLN 24	Previously approved.
ASBESTOS PROGRAM	**RPP-MP-625, REV**	Effective.
Risk Management Plan	**TFC-PLN-39, REV C December 3, 2008**	-No discussion of Engineering control assessments, administrative control efficiency, PPE usage impacts, review of new technologies or future assessment strategies.
Emergency Management Program Plan	TF-PLN-85	Does not address all 29 CFR 1910.120 line items
Staff Qualifications		
Tank Farm Contractor Training and Qualification Plan	TFC-PLN-64	Applicable to all TOC personnel, General in nature
Technical Staff Qualifications Requirements	USQ-GCX-2	IH quals well addressed.
IH Tech Training and Qual Requirements	TFC-BSM-TQ STD-07 R C	-Calls for 2 yr degree + 1 yr experience & Basic in-house IH course, -Does not discuss IHT –Lead Quals -Does not address IH Equipment Custodian Quals
Subcontractor Oversight	**ESH&Q□TFC-ESHQ-S_SAF-C-07, REV B-5□**	**It is unclear as to who will provide the IH support, There are no minimal quals stated for H&S subs**
EMPLOYEE JOB TASK ANALYSIS	**TFC-ESHQ-S_IH-C-17, REV B-3**	**This is the key link in the Medical Surveillance Program within the TOC HASP. Does not address overexposure medical surveillance issues.**
IH Management Elements		
IH Deports and Documents	**Safety & Health**	Excellent resource

- **Dermal Exposure Study** - Waste Disturbing Activities Vapor Characterization.	**Programs-web page**	**- Dermal Exposure Study** - **Dedicated to demonstrating that Silver shield CPC is not warranted for listed TF work.** -Waste Disturbing Activities Vapor Characterization Report
IH Reporting & Records Management	**TFC-ESHQ-S_IH-C-46**	Overall, good document
Managing Vapor Control Zones	**TFC-ESHQ-S_IH-C-48**	Appears to be a very good tool, ties to the TVIS and the CHAD s.
Chemical Management Process	**TFC-ESHQ-S_IH-C-47**	- Not Hazwaste related
Industrial Hygiene Alarm Response	**TFC-ESHQ-S_IH-C-45**	IHT or IH: "Evaluate the cause and determine the need for additional actions" – no decision tree or directives for stop work, etc.
TF Chemical Exposure Hazard Analysis	**Safety & Health Programs-web page**	-Overall, very good risk characterization summaries in similar format for multiple tanks and operations. Use of comparable operations is useful. *T Farm breather filter change out: No need for a vapor control zone and monitoring is limited to ammonia and VOCs: However, WRPS has 1) Provided a list of chemicals in condensate (Hg, nitrosamines, etc) & 2) Stated that filters trap semi vols ?
Exposure Monitoring, Reporting, and Records Management	**TFC-ESHQ-IH-STD-03**	Exceeds OSHA retention of exposure records (75 yrs)
Industrial Hygiene Response to Vapor Concerns	**TFC-ESHQ-IH-STD-09**	Very good overall approach, but cited instruments and techniques are limited in scope?
Industrial Hygiene Equipment Management	**TFC ESQC _H- S PI 11**	Good Directive.
Industrial Hygiene Response to Employee Contact with Chemical Waste	**TFC-ESHQ-IH-STD-10**	"All hazard and facility/area information will be provided to the Occupational Medicine Contractor and the shift manager". What, where, How and when?
Technical Documents		
Industrial Hygiene Chemical Vapor Technical Basis	**RPP-22491, R1**	-Excellent effort, subject to some change per WRPS and HC interactions
Tank Waste Dermal Exposure Assessment	**RPP-34147 Revision 0**	- Excellent Element of Tech Basis- Advance level work -liquid has a pH of 13, yet document only calls for safety glasses, as does the PPE plan below. -Conclusion is unclear with respect to CPC requirements.
Concentrations of Chemicals of Potential Concern in Water and Organic Condensates	**PRR-RPT-24794, R 1**	-Excellent Study and characterization
Respirator Issuance and Control Processes	**TFC-ESHQ-S_IH-CD-05.1**	Effective.
Personal Protective Equipment	**TFC-ESHQ-S_IS-C-02**	-lacks discussion of decision logic for CPC selection &, service life -Indicates that corrosive materials are cause for protection, but the text only addresses impact protection, not splash protection?
Blood borne Pathogen Exposure Control Standard	**TFC-ESHQ-S-24**	- does not define type of Gloves -Refers only to "masks" as respiratory protective equipment
INDUSTRIAL HYGIENE INSTRUMENT ALARM RESPONSE	**TFC-ESHQ-S_IH-C-45, REV A-1**	IHT or IH: "Evaluate the cause and determine the need for additional actions".
Response to Reported Odors or unexpected Changes to Vapor Conditions	**TF Abnormal Operating Procedures:**	IH to collect grab sample for GC/MS Real time monitoring is VOC and ammonia
Evaluation and Procurement of Industrial Hygiene Monitoring Instruments	**TFC-ESHQ-S_IH-CD-38**	- No discussion of new technology reviews, but very good element of such a process.
3M Breathe Easy Powered Air	**TFC-ESHQ-S_IH-D-**	Effective.

Purifying Respirator Test and Maintenance	**05.2**	
MSA OptimAir 6A Powered Air Purifying Respirator Test and Maintenance	**TFC-ESHQ-S_IH-D-05.3**	Effective.
Using the TVA 1000B Toxic Vapor Analyzer	**TFC-ESHQ-S_IH-D-25**	-No discussion of COPC that are detected by PID/FID or sensitivity/ correction factors
Tank Vapor Source Monitoring	**TFC-ESHQ-S_IH-D-27**	Very general, no techniques described.
Permit Required Confined Space	**TFC-ESHQ-S_IH-C-04, REV C-2**	N o comments.
MIRAN 205B Series SapphIRe Instrument Operation	**TFC-ESHQ-S_IH-D-32**	Very good. Note format varies with different instruments.
Noise Surveys, Dosimetry, and Octave Band Analysis	**TFC-ESHQ-S_IH-D-34**	Excellent.
Hazard Communication	**TFC-ESHQ-S_IH-C-02**	Unclear as to what hazard index is used for labeling; HMIS?
Chain of Custody and Submitting Samples for Laboratory Analysis	**TFC-ESHQ-S_IH-P-10**	Good.
Ergonomics	**TFC-ESHQ-S_IH-STD-03**	Sound. Cites TLV Booklet for primary direction. See Also: **TANK FARMS GENERAL INDUSTRIAL SAFETY HAZARDS ANALYSIS** **See Also Ergonomics H&S web page**
Cold Stress	**TFC-ESHQ-IH-STD-01**	Effective.
Heat Stress Control	**TFC-ESHQ S IH C -07**	Good, comprehensive.
Laser Safety and Nonionizing Radiation	**TFC-ESHQ-IH-STD-02**	No comment.
Asbestos Control - Facility Management/General Industry	**TFC-ESHQ-IH-STD-04**	29 CFR 1910.1001(l), *Medical Surveillance* requires a specific pre-placement examination before an employee can be designated as an asbestos worker but TFC-ESHQ-IH-STD-04, *Asbestos Control – Facility Management/General Industry* does not document how these pre-placement requirements are transmitted to the occupational medical office or verified to have been met before placement.
Asbestos Control - Construction Industry	**TFC-ESHQ-IH-STD-05**	No comments
Hearing Conservation Program	**TFC-ESHQ-IH-STD-06**	29 CFR 1910.95(g)(10) defines a standard threshold shift as a change in hearing threshold relative to the baseline audiogram of an average of 10 dB or more at 2000, 3000, and 4000 Hz or greater in either ear. Contrary to this TFC-ESHQ-IH-STD-06, *Hearing Conservation Program*, Revision A, Dated October 28, 2004 list the determining standard threshold shift that is an average of 25 dB or greater at 2000, 3000, and 4000 Hz in either or both ears for written notification to an employee.
Lead Control Program	**TFC-ESHQ-IH-STD-08**	29 CFR 1910.1025(e)(4), *Mechanical Ventilation* requires effectiveness check of at least every three months and within five days of any change that may result in a change in employee exposure to lead. Contrary to this TFC-ESHQ-IH-STD-08, *Lead Control Program* (section 3.3.3, *Mechanical Ventilation*) omits the effectiveness check requirement.
Carcinogen Control	**TFC-ESHQ-IH-STD-11**	29 CFR 1910.1003 (c)(2)(ii) requires for the listed carcinogens within a regulated area, authorized employees upon exit wash the hands, forearms, face, and neck upon each exit. Contrary to this TFC-ESHQ-IH-STD-11, *Carcinogen Control* (Step 10) only identifies the action of washing but is non-specific on body section or upon each exit of the regulated area. 29 CFR 1910.1003(e)(1)(ii)requires a specific sign at entrances to regulated areas containing operations covered by paragraph (c)(5). Contrary to this TFC-ESHQ-IH-STD-11, *Carcinogen Control* (Step 8) does provide the specific signage as the referenced section requires.
Industrial Hygiene Monitoring and Control Strategies During Tank Retrieval and Transfers	**TFC-ESHQ-IH-STD-12**	Requires updating: This February, 2005 document discusses pending, future policies not yet addressed.
Illumination	**TFC-ESHQ-IH-STD-13**	-consistent with 29 CFR 1910.120 M (illumination)
IHT Flammable Gas Surveillance on	**TF-OPS-IHT-001**	-Good record keeping tools, no mention of calibration or correction factors if warranted.

Double Shell Tanks		
Perform IHT Flammable Gas Surveillance on Single Shell Tanks	TF-OPS-IHT-002	-Good record keeping tools, no mention of calibration or correction factors if warranted.
Preparation and Field Use of Multi-Gas Monitor Model TMX412	TF-OPS-IHT-003	Excellent. Note: No discussion of LEL corrections.
Preparation and Field Use of iTX Multi-Gas Monitor and iSP Motorized Sampling Pump	TF-OPS-IHT-004	Effective.
Preparation and Field Use of the ppbRAE Volatile Organic Compound Monitor	TF-OPS-IHT-005	Very Good (=/- 10% of bump gas acceptable) No discussion of PID lamp or range, sensitivities or applications.
Preparation and Field Use of Drager Accuro and Accuro 2000 Pump and Colorimetric Indicator	TF-OPS-IHT-006	Excellent. Do not understand pump application in text?
Using Direct Reading Instruments	TF-OPS-IHT-007	-Overall, good document. - No discussion of COPC that are detected by PID/FID or sensitivity/ correction factors
Using The Sper Scientific Light Meter	TF-OPS-IHT-008	Good.
Industrial Hygiene Pump Preparation and field Use for Personal-Area Air Monitoring	TF-OPS-IHT-009	Effective.
Field Wipe Sampling and Bulk Sampling Methods	TF-OPS-IHT-0010	Effective.
Preparation and Field Use of the AreaRAE Multi-Gas Monitor	TF-OPS-IHT-0011	Effective. Good detail.
Preparation and Field Use of the QUESTemp 15 and QUESTemp 32 Heat Stress Monitors	TF-OPS-IHT-0012	Effective.
Preparation and Field Use of the Lumex Ra-915+ Mercury Vapor Analyzer	TF-OPS-IHT-0014	Effective. Mode of technology absent.
Preparation and Field Use of the Quest Q300 Noise Dosimeter and 2900 Sound Level Meter	TF-OPS-IHT-0015	This procedure states the "the following documents may be need to perform this procedure" then lists 16 major documents, including TLV books, CFRs, ANSI docs, etc . This is an unrealistic burden to place on IHTs!
Preparation and Field Use of the Manning EC-P2 Ammonia Monitor	TF-OPS-IHT-0016	Unclear as to how an IHT's calibration (if necessary) is accounted for on sticker and records?
Metrics		-
Performance Indicators	H&S Web	Good metrics, but limited to subject matter - Lab turn around data - Tracking of # of samples
Industrial hygiene Exposure Assessment Strategy	TFC-PLN-34, REV D-2 Section 3.4	-Discusses SEGs -number of exposures below 10% of OELs -Number of exposures greater then 50% of the OEL -Recommendations for SEG revisions or EAS improvements
Tertiary Documents		

Procedural Items	LCO 3.2.3 SST 241-B-203/B-204 Passive Ventilation Sys **Tank Farm DSA Requirements Implementation Matrix** **AC 5.8 Emergency Preparedness** **AC 5.10 Flammable Gas Control** **LCOS: ventilation, Flammable Gas Concentrations**	No Comments
MSDS	**Safety & Health Programs-web page**	Appears to be a sound system of electronic MSDS access.
TANK VAPOR INFORMATION SHEETs	**Safety & Health Programs-web page**	- Dermal Protection outlines those tanks that do not call for silver shield. This does not clarify what CPC, if any, is warranted, nor does it address corrosive element. - Monitoring for COPC's (Chemicals of Potential Concern) Good element to the Exposure Assessment Strategy, as applied to A tank farm only. However, narrative states: " Direct reading instruments (DRI) are used to monitor for COPC that may cause immediate acute effects, such as irritation." However, the list of 8 chemicals that are monitored by DRIs does not include some other COPCs that appear to offer acute effects such as furan? - Health Effects of Chemicals of Potential Concern – good Hazard Communication tool for hazwaste consitutents. - Odor Thresholds – good reference.

U.S. Department of Energy
[redacted]
P.O. Box 450, MSIN H6-60
Richland, Washington 99352

JAN 12 2009

08-ESQ-335

Mr. Mike Armstead
Procurement Contracts Manager
Washington River Protection Solutions LLC
2440 Stevens Center Place
Richland, Washington 99354

Dear Mr. Armstead:

CONTRACT NO. DE-AC27-08RV14800 – NOTIFICATION OF INDUSTRIAL HYGIENE TECHNICAL BASIS ASSESSMENT

The U.S. Department of Energy, Office of River Protection (ORP) will conduct an assessment of the Washington River Protection Solutions LLC industrial hygiene technical basis during the month of January 2009. The lead for this assessment is Richard L. Urie and supported by Mario R. Moreno. An assessment review plan is attached.

If you have any questions, please contact me, or your staff may contact Richard L. Urie, Office of Environmental Safety and Quality, (509) 376-2229.

Sincerely,

Joseph C. Poniatowski
Contracting Officer

ESQ:RLU

Attachment

cc w/attach:
F. Beranek, WRPS
M. W. Jones, WRPS
D. T. Tuckness, WRPS
WRPS Correspondence

Attachment
08-ESQ-335

JAN 1 2 2009

U.S. Department of Energy

Office of River Protection

Industrial Hygiene Technical Basis Assessment

of

Washington River Protection Solutions

Industrial Hygiene Technical Basis Assessment
A-09-ESQ-TANKFARM -001

PURPOSE:

U.S. Department of Energy (DOE), Office of River Protection (ORP) will conduct an assessment of the contractor's Industrial Hygiene (IH) technical basis programmatic documents, staff qualifications, and internal means of management, which provide guidance of work implementation at the Washington River Protection Solutions LLC (WRPS) operated facilities. This assessment fulfills a scheduled assessment that is identified in the ORP Fiscal Year 2009 Integrated Assessment Schedule. The assessment will conform to the requirements of ORP procedure ESQ-IP-1, RO.

INDUSTRIAL HYGIENE SCOPE:

The scope of this assessment shall be limited to the following basic tasks:

I. A review and assessment of all WRPS programmatic IH related documents, as defined in this section;

II. An evaluation of the IH personnel qualifications by way of a review of staff qualifications cards and through small group interviews; and

III. A review of WRPS IH management records, data bases and reports that reflect the current level of effort associated with IH treads analysis, program metrics, program planning, self-assessments, and associated corrective actions.

The assessment plan was developed using DOE G 440.1-3, titled Occupational Exposure Assessment. DOE G 440.1-3 provided the Criteria, Review, and Approach Documents (CRAD)/Lines of Inquiry which are listed below. The assessor modified the CRADs/Lines of Inquiry to be more specific as it relates to WRPS. The assessor will use a combination of conventional review techniques during the course of the assessment, including document reviews, personnel interviews, and field observations.

For the purpose of this assessment and to assure a common understanding, an IH program is considered to consist of the following technical and programmatic sub-elements:

1. Hazard communication & related training;

2. Chemical exposure monitoring, modeling, and related health risk assessments;
   a. Inclusive of air & surface sources, instrumentation, and techniques in consideration of eye/dermal exposures, injection, inhalation and ingestion

3. Toxicology and chemical hazard assessments;
   a. Inclusive of medical surveillance, and consideration of health effects such as cancer, birth defects, chemical sensitivity, target organ effects; explosive,& reactive chemical hazards

4. Implementation and testing of control strategies for IH Hazards;
   a. Inclusive of demonstrated consideration of engineering controls, including ventilation and shielding; administrative controls including product or process substitution; ongoing reviews of emerging technologies

5. Ergonomics and illumination;

6. Identification, assessment, and control of physical work environment factors;
   a. Inclusive of heat and cold, high and low pressure environments, and shift work

7. Selection and use of Personal Protective Equipment, with an emphasis on eye, face, skin, and respiratory protection;

8. Energy and electromagnetic radiation;
   a. Inclusive of the Identification, assessment and control of noise, non-ionizing radiation, and laser safety

9. Biological hazards assessment within the work place;
   a. Inclusive of pathogenic agents, poisonous organisms, and allergens

10. Functional IH Management elements, including:
    a. Staff Training and Qualifications programs
    b. Trends analysis, Metrics, tracking, self-assessments and reporting
    c. Lessons learned, corrective actions and improvements
    d. Employee interactions and informational exchange
    e. Planning, budgeting, and continuing education

11. Integration of the afore mentioned IH elements into applied operations including:
    a. Hazardous Waste Operations
    b. Confined Space Entry
    c. Laboratory Chemical Hygiene Plans
    d. Chemical spill response activities
    e. Beryllium, lead, carcinogen and asbestos management programs

CRITERIA

The CRAD is intended to provide guidance for evaluation of the occupational exposure assessment and health hazards management component of the DOE and WRPS IH program. The goal of the criteria is to answer the fundamental question:

"Is WRPS properly planning, and effectively managing an industrial hygiene, occupational exposure assessment, and hazards management program that meets the intent of 10 CFR 851?"

Enclosure 1 provides detailed questions that may be utilized as specific CRADs. Enclosure 2 provides a summary of the methodology to be employed, to assist WRPS in facilitation of the assessment process.

TEAM MEMBERS:

The assessment team will be lead by Richard L. Urie, with the support of Mario R. Moreno.

REQUIREMENTS:

- 10 Code of Federal Regulations (CFR) Part 851, Worker Safety and Health Program Rule;
- 10 CFR Part 850 Chronic Beryllium Disease Prevention Program; Final Rule (not applicable to this assessment);
- DOE G 440.1-3, Occupational Exposure Assessment;
- DOE O 226.1a, Contractor Assurance;
- OSHA Regulations Standards - 29 CFR 1910 and 1960;
  - 29 CFR 1910, with emphasis on –
    - General Duty Clause
    - 29 CFR 1910.120 Hazardous Waste Operations
    - 29 CFR 1910.132, Personal Protective Equipment
    - 29 CFR 1910.134, Respiratory Protection
    - 29 CFR 191 0. 94, 95 & 97 Ventilation, noise, & Non ionizing Radiation
    - 29 CFR 146 Confined Space Entry
    - 29 CFR 1910.141 Sanitation
- DOE Environmental Safety and Health (ES&H) Reporting Order 231.1; and Computerized Accident/Incident Reporting System;
- DOE O 231.1A, ES&H Reporting;
- Work Authorization System Order; DOE O 412.1A;
- ES&H Goals Policy; DOE P 450.7
- Safety Management Functions, Responsibilities, and Authorities Policy; DOE P 411.1
- Quality Assurance Order; DOE O 414.1C;

- DOE Notice 450.14, Safe Handling, Transfer, and Receipt of Biological Etiologic Agents at Department of Energy Facilities;
- DOE P 456.1, Secretarial Policy Statement on Nanoscale Safety;
- DOE Order 5480.19, Conduct of Operations Requirements for DOE Facilities;
- DOE Order 5480.20A, Personnel Selection, Qualification, and Training. Requirements for DOE Nuclear Facilities; and
- DOE O 225.1A, Accident Investigations.

Richard L. Urie, Team Lead, January 7, 2009

ENCLOSURE 1

PERFORMANCE OBJECTIVES

Performance Objective 1: Washington River Protection Solutions LLC (WRPS) Program Documentation

Criteria to be evaluated:

1. Has the WRPS Safety and Health Organization documented the Industrial Hygiene (IH); occupational exposure and health hazards management programs in a manner which is comprehensive and compliant with 10 Code of Federal Regulations (CFR) 1910.851, 10 CFR 850 and 851, other U.S. Department of Energy (DOE) Directives and recognized consensus standards (e.g., the American Industrial Hygiene Association [AIHA], National Institute of Occupational Safety and Health [NIOSH]). Has the WRPS IH program defined the technical areas and the frequency at which each technical area is assessed? For each technical area, are there procedures for performing the health hazard assessment which defines the purpose, scope, responsibilities, assessment criteria, and references? Does the assessment documentation include: occupational exposure assessment and sampling methodology, laboratory analysis method used, report findings, causal analyses, corrective actions, review, and distribution of report?

2. Has WRPS documented a clear definition of responsibility for decisions by senior management, provision for escalation of worker health matters involving significant occupational exposures and hazards to DOE in an appropriate time frame?

3. Does WRPS maintain a documented sitewide planning and budgeting process which includes priorities for managing occupational exposures and health hazards?

4. Does the WRPS Safety and Health Organization have documented implementation plans for the occupational exposure and health hazards management program?

5. Has WRPS established clear lines of authority and responsibility for managing the occupational exposure and health hazards program? Are responsibilities of each staff position defined for worker health activities? Internal and external interfaces within and between the DOE Office of River Protection, the WRPS, and with outside groups (i.e., State, local, and regional health officials and other government agencies), being clearly and formally defined for each position?

6. Has the WRPS Safety and Health Organization developed and maintained a written occupational exposure and health hazards management program in conformance to 10 CFR 850, and 10 CFR 851.

PERFORMANCE OBJECTIVES

Performance Objective 2: Operating Contractor's Program Implementation of Administrative Elements

Criteria to be evaluated:

1. Has WRPS fully integrated its IH; occupational exposure and health hazards management program into the work planning and execution process?

2. Does the contractor's Safety and Health organization prepare an annual assessment schedule showing the occupational exposure and health hazards assessments planned?

3. Does the contractor's Safety and Health organization submit to the DOE Office of River Protection (ORP), a list of the dates on which occupational exposure and health hazards technical assessments were preformed?

4. Do the WRPS audit management system tools include; procedures for performing occupational exposure and health hazards assessments, worksheets, periodic standard report formats, reference material, training material, which are provided to staff performing assessments?

5. Does the contractor's Safety and Health Organization has a system in place to control, maintain occupational exposures, health hazards management procedures and hazard control guides current? Does the system include a mechanism for updating and distributing procedures, and internal guides on a specified schedule?

6. Does WRPS Safety and Health Organization perform analyses on significant occupational exposures and health hazards assessment findings? Has the contractor identified staff that is responsible for correcting the contractor's health hazard deficiencies? Are the actions necessary to resolve the deficiency addressed in corrective action plans?

7. Does the contactor's Safety and Health organization perform trend analysis of findings from the occupational exposures and health hazards programs? Does the contractor communicate leading and lagging performance trends to ORP? Does the contractor have a technically defensible corrective action management program that will prevent reoccurrence of IH; occupational exposure and health hazards management program deficiencies?

8. Does the contractor's Safety and Health organization have a tracking system that includes all occupational exposures and health hazards finding? Does the tracking system identify corrective actions, schedules, and progress made on corrective actions? Is other information such as results of root cause analyses also included in the tracking system? Is there a method to flag or highlight significant events or actions is included in the tracking system?

9. Does the contractor's Safety and Health organization ensure that management processes, activity hazards identification and analysis, and functional technical appraisals in specific occupational exposure and health hazards assessment subject areas are included in the contractor's program and are integrated into the Contractor's safety management, work planning and execution system?

   Note: This might include: activity hazards analysis, exposure assessments, hazard controls and, the specific technical program elements (e.g., noise and hearing conservation, ventilation, respiratory protection, asbestos, non-ionizing radiation (radio-frequency radiation, lasers, magnetic fields), ergonomics, carcinogens, DOE Beryllium program, Occupational Safety and Health Administration (OSHA) substance specific health standards i.e., Benzene, Asbestos, etc; occupant emergency and critical event planning, sanitation, vibration, extreme temperature, biohazards, confined spaces, laboratory hygiene program, Indoor Air Quality, office environments, recordkeeping, employee training and certification, and labeling and posting).

10. Does the contractor's line management organization track the effectiveness of its implementation of the occupational exposure and health hazards program by reviewing the findings of its internal assessments of the program? Does the contractor's line management identify problems which are promptly corrected?

11. Does WRPS have an effective corrective action program and organizational structure for resolving related action items? Contractor performance with respect to completing corrective actions is documented, reported, and tracked?

12. Does the WRPS Safety and Health organization have adequate staff with a level of professional training, experience commensurate with the requirements for implementation of the IH; occupational exposures and health hazards management program?

13. Does the WRPS Safety and Health organization ensure that internal self-assessments of occupational exposure and health hazards are conducted?

14. WRPS Safety and Health Organization ensure compliance with mandatory standards for assessing and managing occupational exposures and health hazards.

15. Is the WRPS occupational exposure and health hazards assessment staff adequately trained in occupational exposure assessment, such as through an AIHA, or other academic based program? Does the training address familiarization with all mandatory standards, AIHA or NIOSH criteria, guidance documents, and other references that are pertinent to the technical area; use of procedures for conducting the assessment and, instructions on preparing reports and related documentation?

16. Does the WRPS Safety and Health Organization prepare performance indicator reports, utilize performance indicators involving occupational exposures, health hazards data, and other operations information? This includes; medical monitoring, epidemiological surveillances, Computerized Accident/Incident Reporting System, OSHA 300 log data,

Occurrence Reporting and Processing System reportable occurrences, for performing trending and analysis to provide early identification of potential exposure and health hazards and/or deteriorating/improving worker health conditions.

17. WRPS provides management periodic summaries of performance on the assessment and management of occupational exposures and health hazards.

18. Has WRPS developed program management goals related to occupational exposures and health hazard? Are these goals measurable and include short-term (annual) and long-term goals (several year period) to assess and manage occupational exposures and health hazards? Is the progress towards goals monitored regularly and goals adjusted as necessary? Do the line managers have performance elements in their personnel appraisal relating to successful attainment of program management goals?

ENCLOSURE 2

METHODOLOGY

The Industrial Hygiene (IH) technical basis assessment shall consist of the following elements:

1. An in-brief tentatively planned for the week of January 12, 2009, involving the Washington River Protection Solutions LLC (WRPS) health and Safety Manager and IH Manger; and the U.S. Department of Energy (DOE) assessment team. The purpose of the in-brief is to clarify the scope and the applicable Criteria Review and Approach Documents; and to discuss scheduling and logistical requirements of the assessment.

2. The DOE Office of River Protection (ORP) assessment team shall review all WRPS IH related programs, plans, procedures and related documents currently on record. This assessment will not necessarily include a detailed review of data bases, log books, and records, other than to verify the presence of such documents as warranted. The review process will entail a comparative analysis of WRPS programmatic documents to Federal requirements (please see requirements section below) and include a review such umbrellas programs as:

   - 851 requirements Matrix TFC-ESHQ-S_SAF-CD-11;
   - Worker Health and Safety Program, RPP-27195; and
   - Tank Operations Contractor Health and Safety Plan.

To include secondary and tertiary documents such as

- IH Chemical Vapor Technical Basis, RPP-22491, Revision 1;
- IH Exposure Assessment Strategy RPP-27195 TFC-PLN-34 R D-2; and
- IHT-007 Using Direct Reading Instruments.

3. The DOE ORP assessment team will meet with the appropriate WRPS management representatives to gain a clear understanding of WRPS IH program goals, objectives, metrics/ trends analysis, and internal assessment efforts and results. In addition, the team will review the communication process between the WRPS IH management team and the DOE ORP representatives with respect to on-going programmatic updates and special event notifications. The meeting(s) will also serve as an opportunity to clarify any questions regarding WRPS written programs and guidance documents.

4. The DOE ORP assessment team will coordinate with WRPS a series of interviews with equal grades of all WRPS IH personnel for the purpose of evaluating their level of knowledge and

training; and to gain first hand insight into their respective job duties and interactions relative to the programmatic directives.

5. The DOE ORP assessment team will conduct a Generator Assistance Program analysis based on the results of the assessment per a 10 CFR 851 itemized template.

6. Other elements as deemed necessary.

7. The DOE ORP assessment team will conduct a de-brief to discuss any draft observations or findings with WRPS managers of interest.

Task# ORP-ESQ-2008-0344

E-STARS[R] Report
Task Detail Report
01/12/2009 1013

TASK INFORMATION

Task#	ORP-ESQ-2008-0344		
Subject	CONCUR:08-ESQ-335; NOTIFICATION OF INDUSTRIAL HYGIENE TECHNICAL BASIS ASSESSMENT		
Parent Task#		**Status**	CLOSED 01/12/2009
Reference	08-ESQ-335	**Due**	
Originator	Gano, Becky	**Priority**	High
Originator Phone	(509) 376-6004	**Category**	None
Origination Date	12/30/2008 0835	**Generic1**	
Remote Task#		**Generic2**	
Deliverable	None	**Generic3**	
Class	Long Term	**View Permissions**	Normal

Instructions

Correspondence is being routed for concurrence via hard copy. Once you receive the correspondence, please approve or disapprove electronically via E-STARS and route to next person on the routing/concurrence list.

BCC:
ESQ OFF FILE
ESQ RDG FILE
J.C.PONIATOWSKI, AMD
W.J.TAYLOR, ESQ
K.A.HOAR, VCD
R.L.URIE, VCD

RECORD NOTE:

ROUTING LISTS

1	Route List	Inactive

- Urie, Richard L - Review - Cancelled - 01/12/2009 1013
  Instructions:
- Hoar, Kenneth A - Review - Concur - 01/12/2009 1003
  Instructions:
- Taylor, William J - Review - Concur - 01/12/2009 0734
  Instructions:
- Poniatowski, Joseph C - Approve - Approved - 01/12/2009 0936
  Instructions:

ATTACHMENTS

Attachments

1. 08-ESQ-335 att IH Technical Basis Assessment.doc
2. 08-ESQ-335 WRPS LTR Notification of Industrial Hygiene Technical Basis Assessment.doc

COLLABORATION

COMMENTS

Poster Gano, Becky - 01/12/2009 1001

CLOSED

RECEIVED
JAN 12 2009

Task# ORP-ESQ-2008-0344

E-STARS[R] Report
Task Detail Report
12/30/2008 0839

TASK INFORMATION

Task#	ORP-ESQ-2008-0344		
Subject	CONCUR:08-ESQ-335; NOTIFICATION OF INDUSTRIAL HYGIENE TECHNICAL BASIS ASSESSMENT		
Parent Task#		**Status**	Open
Reference	08-ESQ-335	**Due**	
Originator	Gano, Becky	**Priority**	High
Originator Phone	(509) 376-6004	**Category**	None
Origination Date	12/30/2008 0835	**Generic1**	
Remote Task#		**Generic2**	
Deliverable	None	**Generic3**	
Class	Long Term	**View Permissions**	Normal

Instructions

Correspondence is being routed for concurrence via hard copy. Once you receive the correspondence, please approve or disapprove electronically via E-STARS and route to next person on the routing/concurrence list.

BCC:
ESQ OFF FILE
ESQ RDG FILE
J.C.PONIATOWSKI, AMD
W.J.TAYLOR, ESQ
K.A.HOAR, VCD
R.L.URIE, VCD

RECORD NOTE:

ROUTING LISTS

1	Route List	Active

- Urie, Richard L - Review - Awaiting Response - Due Date 1/8/09 RL
  Instructions:
- Hoar, Kenneth A - Review - Awaiting Response - Due Date 1/8/09
  Instructions:
- Taylor, William J - Review - Awaiting Response - Due Date 1/9/09
  Instructions:
- Poniatowski, Joseph C - Approve - Awaiting Response - Due Date 1/12/09
  Instructions:

ATTACHMENTS

Attachments

1. 08-ESQ-335 att IH Technical Basis Assessment.doc
2. 08-ESQ-335 WRPS LTR Notification of Industrial Hygiene Technical Basis Assessment.doc

COLLABORATION

COMMENTS

No Comments

TASK DUE DATE HISTORY

No Due Date History

SUB TASK HISTORY

No Subtasks

-- end of report --

APPENDIX C - INTERGRATED SAFETY MANAGEMENT SYSTEM EVALUATION FORM

ISMS Evaluation
ESQ-OA-IP-01-R1
Issued 01/21/09
Tank Operations Contractor
Industrial Hygiene Technical Basis Assessment

For each of the following identify whether the report:

S = Identified a strength

W = Identified a weakness

N = Found the topic with no special strength or weakness

N/A = Did not address the topic

Topical Area	Evaluation	Comment (optional)
Core Function 1: Define the Scope of Work	W	Field work OK, weak at program level
Core Function 2: Analysis of Hazards	N	
Core Function 3: Develop and Implement Hazard Controls	N	
Core Function 4: Perform Work Within Controls	N	
Core Function 5: Provide Feedback and Continuous Improvement	W	
Principle 1: Line Management Responsibility for Safety	W	
Principle 2: Clear Roles and Responsibilities	W	Including weak interfaces with Ops and Eng.
Principle 3: Competence Commensurate with Responsibilities	N	
Principle 4: Balanced Priorities	W	
Principle 5: Identification of Safety Standards and Requirements	W	
Principle 6: Hazard Controls Tailored to Work Performed	W	
Principle 7: Operations Authorization	N	
Supplemental Principle 1: Highly-Reliable Operational Performance	W	
Supplemental Principle 2: Individual Attitude and Responsibility	S	Current workforce usually performs work correctly in absence of program Procedures.
Supplemental Principle 3: Performance Assurance	W	
Supplemental Principle 4: Organizational Performance Improvement	W	

APPENDIX D – ASSESSMENT TEAM BIOGRAPHIES

Richard L. Urie, Team Lead

Mr. Urie is certified in Industrial Hygiene (IH) by the American Board of Industrial Hygiene, # 3681; and is co-certified in safety, but the Board of Safety Professionals, #12248. He holds a masters degree in Environmental Science from the University of Colorado - Denver and a Bachelor of Science Degree in Community Health, from the University of Northern Colorado. He has practiced IH and safety since 1980, with project experience at over 20 major Comprehensive Environmental Response Compensation and Liability Act Sites and 4 U.S. Department of Energy (DOE) facilities within the western United States. He initiated and managed an IH consulting firm from 1988 to 1999, employing 5 Certified Industrial Hygienists and has provided assessments, training, and consultation to over 400 institutions and businesses in the United States, Germany, Kuwait, Iraq, Indonesia, Taiwan, and Australia. He has served as the team lead for the Department of Homeland Security - Biological Emergency Support Team as a member of the HAZMAT Team at the Los Alamos National Laboratory (LANL) and worked directly with the Centers for Disease Control Infectious Disease Branch and the National Institute for Occupational Safety and Health in the response to a suspected bioterrorism event and in the establishment of response planning for perceived targets of opportunity in New York City, New York. He supported research in airborne agricultural bioterrorism through LANL and Texas A&M West. Examples of past IH assessments performed by Rich Urie include:

- PNL - Hanford Pre Tiger Team IH programmatic assessment & HAZWOPER training.
- LANL Readiness Assessment of the TA-54 Decontamination, Volume Reduction System & training.
- Rocky Flats Plant post Tiger Team IH HAZWOPER programmatic assessment and generation of the original HAZWOPER Health and Safety Program.
- U.S. Army Support Operations Iraq/Kuwait: IH risk assessments & training.
- Freeport Indonesia annual IH programmatic Assessments and staff training program.
- Adolph Coors Company IH Emergency Preparedness Assessment and Training.
- Homestake Gold Mine IH Programmatic Assessment.
- National Aeronautics and Space Administration (NASA) White Sands Test Facility IH field Assessments.
- AMOCO Production emergency response assessor, expert witness, and trainer.

He is the author of three publications on the subject of Personal Protective Equipment and associated risk assessments. One such publication was in collaboration with the American Conference of Governmental Industrial Hygienists. He has served as an expert witness in Federal court regarding related IH subject matter, and provided IH presentations to the U.S. Attorney General's Office, Department of Homeland Security, NASA, National Mining Engineers Conference, and DOE, among others. Mr. Urie is currently the IH program representative for the DOE Office of River Protection.

Mario Moreno, Team Member

Mr. Moreno holds a bachelor's degree from California State Polytechnic University in Chemical Engineering. He has provided engineering related services to the U.S. Department of Energy (DOE) for 20 years, including an assignment as the program manager for the Single-Shell Tank stabilization efforts. Mario, formerly with the tank farm nuclear safety/authorization basis; is currently working towards Industrial Hygiene (IH) certification under the DOE Office of River Protection IH mentorship program and has completed a number of IH technical courses. He has participated in numerous health and safety related assessments at the Hanford Site.

washington river protection solutions | PO Box 850
Richland, WA 99352

June 11, 2009 WRPS-0901072 R1

Mr. J. C. Poniatowski, Contracting Officer
U.S. Department of Energy
Office of River Protection
Post Office Box 450
Richland, Washington 99352-0450

Dear Mr. Poniatowski:

CONTRACT NO. DE-AC27-08RV14800 – WASHINGTON RIVER PROTECTION SOLUTIONS LLC RESPONSE TO PHASE 1, INDUSTRIAL HYGIENE TECHNICAL BASIS ASSESSMENT A-09-ESQ-TANKFARM-001, "WASHINGTON RIVER PROTECTION SOLUTIONS LLC CORRECTIVE ACTION PLAN"

Reference: Letter, J. C. Poniatowski, ORP, to J. M. Armstead, WRPS, "Contract No. DE-AC27-08RV14800 – Approval of Extension to the Washington River Protection Solutions LLC (WRPS) Response to Results of Assessment A-09-ESQ-TANKFARM-001," 09-ESQ-175/0901072, dated May 20, 2009.

This letter transmits Washington River Protection Solutions LLC (WRPS) response to the U.S. Department of Energy, Office of River Protection (ORP) assessment A-09-ESQ-TANKFARM-001, Phase I, "Industrial Hygiene Technical Basis." ORP requested a response from WRPS by May 16, 2009, and WRPS was granted an extension to June 15, 2009 in the referenced letter. There were four findings and one observation identified in the assessment report. Enclosed is the WRPS Corrective Action Plan (CAP) that addresses these findings.

Per our commitment to ensure that the highest standards of performance continues, the enclosed Corrective Action Plan addresses the corrective actions taken by WRPS to control or remove any adverse impact from the non-compliant condition, corrective actions taken to identify the extent of condition, and corrective actions taken to correct the causes, and prevent further findings, and the date when all corrective actions will be completed. The corrective actions outlined in the enclosed CAP have been discussed with Ms. S. J. Olinger, Ms. S. L. Charboneau, and Messrs. W. J. Taylor, K. A. Hoar, and R. L. Urie of your staff.

At a meeting on June 5, 2009, Ms. S. J. Olinger directed WRPS to respond to the observation. WRPS is requesting 45 days from the date of this letter to provide a response to the observation.

If you have any questions, please contact me at 372-9168, or Mr. D. T. Tuckness, Worker Safety and Health Manager, at 373-9920.

Sincerely,

(Signature Attached)

J. M. Armstead
Contracts Manager

MWJ:KMR

Enclosure: Corrective Action Plan - Washington River Protection Solutions LLC Response to Phase 1, Industrial Hygiene Technical Basis Assessment A-09-ESQ-TANKFARM-001 (15 pages)

cc: ORP Correspondence Control
S. E. Bechtol, ORP
S. L. Charboneau, ORP
K. A. Hoar, ORP
S. C. Johnson, ORP
S. J. Olinger, ORP
M. R. Moreno, ORP
W. J. Taylor, ORP
M. J. Urie, ORP

WRPS Correspondence Control
J. C. Allen-Floyd, WRPS
F. Beranek, WRPS
J. A. Caldwell, WRPS
T. M. Jennings, WRPS
G. J. Johnson, WRPS
W. J. Johnson, WRPS
M. W. Jones, WRPS
S. M. Sax, WRPS
B. R. Thomas, WRPS
D. T. Tuckness, WRPS

Electronically Approved by:

UserName: Armstead, Mike (h0525980)
Title: Prime Contract Manager
Date: Thursday, 11 June 2009, 02:30 PM Pacific Daylight Time
Meaning: Signed per Direction of the TOC President's Office
==========

CORRECTIVE ACTION PLAN

Phase 1 Assessment of Industrial Hygiene Technical Basis
(A-09-ESQ-TANKFARM-001)

U. S. Department of Energy (DOE), Office of River Protection (ORP)

Assessment Report

April 15, 2009

Prepared by:
Washington River Protection Solutions LLC
June 15, 2009

Table of Contents

1.0 Introduction 3
2.0 Corrective Action Methodology 3
3.0 Corrective Action Plan Structure 3
4.0 Finding Number A-09-ESQ-TANKFARM-001-F01 4
5.0 Finding Number A-09-ESQ-TANKFARM-001-F02 7
6.0 Finding Number A-09-ESQ-TANKFARM-001-F03 10
7.0 Finding Number A-09-ESQ-TANKFARM-001-F04 12
8.0 Review and Approval of WRPS Corrective Actions 15
9.0 Corrective Action Plan Reporting and Closure 15

1.0 Introduction

The U.S. Department of Energy, Office of River Protection (ORP) performed an assessment of the Tank Operations Contractor "Industrial Hygiene Technical Basis." The assessment report was transmitted on April 15, 2009. The assessment resulted in four findings. This Corrective Action Plan (CAP) addresses the following issues:

- **A-09-ESQ-TANKFARM-001-F01:** Contrary to 29 CFR 1910.120(p)(5), "New Technology Program, " 29 CFR 1910.120(o)(1), "New Technology Programs" and 1910.120(o)(2) WRPS has not established and implemented programmatic procedures which direct the evaluation and introduction of new technologies into the WRPS Environmental Safety Health & Quality group, which includes the IH program.
- **A-09-ESQ-TANKFARM-001-F02:** Contrary to 29 CFR 1910.132(d), 1910.132(d)(1), 1910.132(d)(1)(i), 1910.132(d)(1)(ii), 1910.132(d)(2), 1910.134(c)(1), 1910.134(c)(1)(i), 1910.120(p)(8), WRPS has not established a written, fully comprehensive decision logic for the selection and use of PPE.
- **A-09-ESQ-TANKFARM-001-F03:** Contrary to 10 CFR 851.21, "Hazard Identification and Assessment" there is a lack of specified criteria in the selection of direct reading air monitoring instrumentation and interpretation of results.
- **A-09-ESQ-TANKFARM-001-F04:** Contrary to 10 CFR 851.21 and 851.23, there is an absence of written direction to incorporate the mandated goal of reducing worker exposure to carcinogens and all other chemicals to levels ALARA, below the Chemicals of Potential Concern (COPC) Occupational Exposure Limit (OEL).

2.0 Corrective Action Methodology

A process based on WRPS procedure TFC-ESHQ-Q_C-C-01, *Problem Evaluation Request*, and TFC-ESHQ-Q_ADM-C-12, *Apparent Cause Analysis and Corrective Action Planning*, was used to develop this CAP. The Findings are documented in Problem Evaluation Requests (PERs) in the Washington River Protection Solutions LLC (WRPS) Issues Management System. The causal analysis, extent of condition, remedial corrective actions, and planned corrective actions for the Findings are documented and tracked in the associated PERs. The causes summarized below are supported by an analysis using commonly accepted causal analysis methods.

3.0 Corrective Action Plan Structure

Each finding is addressed in a separate section. For each finding, the following is provided: background; corrective actions that have been taken to control or remove any adverse impact from the noncompliant conditions until sustainable corrective actions are implemented; corrective actions that will be taken to identify the extent of conditions, correct the causes, and prevent further findings; and the date when all corrective actions will be completed verified and compliance to the applicable requirements achieved.

4.0 Finding Number A-09-ESQ-TANKFARM-001-F01

4.1 Finding

Contrary to 29 CFR 1910.120(p)(5), "New Technology Program, " 29 CFR 1910.120(o)(1), "New Technology Programs" and 1910.120(o)(2) WRPS has not established and implemented programmatic procedures which direct the evaluation and introduction of new technologies into the WRPS Environmental Safety Health & Quality group, which includes the IH program.

4.2 Background

WRPS has written programs and procedures describing the processes for actively seeking out and/or developing new technology to improve worker protection. The written documents cover engineering technology development, instrumentation, and respiratory protection. Examples of technology include waste handling equipment, instrumentation and PPE. Procedures and training are developed when new technology is introduced to ensure employee protection is maintained.

The need for technology development is identified by WRPS when existing processes are inadequate or inefficient and no proven technology is available in the industry for the intended application. Inadequate or inefficient processes often result in workers spending more time in hazardous environments, which increases the risk of harm. TFC-PLN-90 "Technology Development Management Plan" defines the tank farm work processes for developing and deploying new technologies. TFC-PLN-90 is a formal, written document that includes engineering, quality assurance and procurement requirements and complies with 29 CFR 1910.120 (o)(1) as a procedure "...for the introduction of effective new technologies and equipment developed for the improved protection of employees working with hazardous waste..." The technology development process progresses through 3 phases. During phase I, discussions are held with potential vendors who have promising technologies that can be developed for WRPS. A formal procurement is initiated to support further development and testing. The statement of work includes functional criteria and testing requirements for the end use of the developmental technology. During phase II, promising technology is subjected to qualification testing to verify that it meets the intended performance and functional criteria. Test plans and procedures are developed. Inspection is conducted during testing to verify compliance with approved procedures. Prior to release for deployment, the QA engineer verifies the quality of the technology for the intended use. Phase III is deployment. The responsible implementing organization applies existing systems for procedures, receipt inspection, storage, handling and work planning to deploy the technology in the field. TFC-PLN-90 also includes a graded application of Quality Assurance program requirements concerning each phase of technology development.

As an example, design is underway on an innovative robotic arm that offers the potential to increase the efficiency of waste removal from single-shell tanks. The arm, referred to as the Mobile Arm Retrieval System (MARS), will be capable of a wide range of motion and include

telescoping capabilities to enable it to reach the tank extremities. Interchangeable tools on the end of the arm will be used to break up the waste, move it to a pump and remove it from the tank. Incorporating lessons learned from other DOE sites and the corporate parents of WRPS with new technology innovations such as use of lightweight and high-strength composite materials have increased the options for effective tank waste retrieval. Improved retrieval effectiveness and efficiency is expected to lead to workers spending less time in hazardous environments.

TFC-PLN-64 "Industrial Hygiene Instrumentation Plan" includes a formal selection and evaluation process to be implemented prior to purchase of an instrument. This evaluation is conducted by an IH assisted by IHTs, Engineering, Quality Assurance, and the maintenance calibration contractor. TFC-ESHQ_S-IH-CD-38 "Evaluation and Procurement of Industrial Hygiene Monitoring Equipment" is the document that describes in detail the instrument evaluation process. In addition, WRPS has included in the instrument maintenance calibration subcontract statement of work a requirement for the subcontractor to notify WRPS of advances in IH instrumentation or newer models that will improve IH monitoring accuracy or efficiency, including those demonstrated to be successfully evaluated by other Hanford contractors. As an example, the portable gas chromatograph/mass spectrometer (GC/MS) was selected as a method to quickly qualitatively analyze for many of the chemicals of potential concern in vapor grab samples. This improved the efficiency in determining whether protective measures are warranted for a given activity and work location.

Additionally in the area of industrial hygiene instrumentation, WRPS's Performance Objectives, Metrics and Commitments includes an objective for new instrumentation evaluation. Initial evaluation of four potential instrumentation technologies has been completed and further evaluation of one of the technologies (Photon Transfer Reaction Mass Spectrometry) is continuing for use as a real time monitor for VOCs in the tank farms.

In the area of personal protective equipment, WRPS continually looks for new technology. Several documents help drive these activities. Examples where these evaluations have lead to the use of new technology:

- The identification of a different respirator that could be used in locations where a powered air purifying respirators (PAPR) equipped with a high efficiency particulate cartridge equipped, hard hat and hood would be required. This PAPR also is the first model to have audible and visual low flow and low battery alarms. After evaluation of the respirators for tank farm applications and user requirements, the respirators were procured by operations. A maintenance and testing program specific to the PAPRs was developed to ensure safe and reliable operation when in use. The program specifies maintenance, testing, repair and setup of the battery power pack and filter housing.
- The upgrade to use nickel metal hydride battery in PAPRs. These batteries offer increased airflow to the user and can operate the PAPR blower units longer than the previously used nickel-cadmium battery. The nickel metal hydride battery is equipped with a red indicator light that activates after about eight to nine hours of continuous use

and alerts the user that the battery needs to be changed-out for a fully charged battery. These batteries also are not prone to developing a memory.

- The identification of OREX clothing that reduces the potential for heat stress. Currently another generation of OREX is under evaluation that could in some cases replace the use of rainsuits and further reduce the risk of heat stress.

4.3 The Corrective Actions Taken to Control or Remove any Adverse Impact from the Noncompliant Conditions and the Results Achieved

Several examples of procedures, processes and field applications were identified that implement the requirement for new technology. No adverse impacts were identified as a result of the finding. Therefore, no immediate corrective actions were taken.

4.4 Corrective Actions Taken to Identify the Extent of Condition

This finding already applies at the company level. Therefore, no extent of condition was performed for this finding.

4.5 Corrective Actions to be Taken to Correct the Causes and Prevent Further Findings

As identified in the assessment report, there are many examples that show in written documents and current practice that WRPS actively pursues new technologies. However, there is an opportunity to improve the program by formalizing the description of the existing practices within engineering and the Health and Safety organization for complying with the cited standard and compiling the new technologies evaluated in a centralized list. In addition to making compliance easier to demonstrate, these improvements further emphasize the WRPS commitment to continuously improving worker protection. The following actions will be taken:

No.	Action	Deliverable(s)	Responsible Manager	Completion Date
CA-01-01	Update TFC-PLN-55 "Industrial Hygiene Safety Management Program Plan" to clearly describe the WRPS practice for complying with the standard, give direction on giving input to the Health and Safety organization on new technologies evaluated, and adding to the requirements section 29 CFR 1910.120(p)(5), "New Technology Program, " 29 CFR 1910.120(o)(1), "New Technology Programs" and 1910.120(o)(2).	Updated procedure	M. Jones	8/28/09

CA-01-02	Update TFC-PLN-91 "Industrial Safety Management Program Plan" to clearly describe the WRPS practices related to industrial safety worker protection equipment (e.g., fall protection devices) for complying with the standard, give direction on giving input to the Health and Safety organization on new technologies evaluated, and adding to the requirements section 29 CFR 1910.120(p)(5), "New Technology Program, " 29 CFR 1910.120(o)(1), "New Technology Programs" and 1910.120(o)(2).	Updated procedure	W. Gaydosh	8/28/09
CA-01-03	Update TFC-PLN-90 "Technology Development Management Plan" to clearly state the WRPS practice for compliance with the new technology standard, give direction on giving input to the Health and Safety organization on new technologies evaluated, and adding to the requirements section 29 CFR 1910.120(p)(5), "New Technology Program, " 29 CFR 1910.120(o)(1), "New Technology Programs" and 1910.120(o)(2).	Updated procedure	R. Mendoza	8/28/09
CA-01-04	Develop and maintain a centralized list of new technologies evaluated. The list will include input from engineering, industrial safety and industrial hygiene.	List of new technologies	M. Jones	7/31/09

4.6 Finding Analysis

WRPS has reviewed this finding and initiated corrective actions to promote improvement.

5.0 Finding Number A-09-ESQ-TANKFARM-001-F02

5.1 Finding

Contrary to 29 CFR 1910.132(d), 1910.132(d)(1), 1910.132(d)(1)(i), 1910.132(d)(1)(ii), 1910.132(d)(2), 1910.134(c)(1), 1910.134(c)(1)(i), 1910.120(p)(8), WRPS has not established a written, fully comprehensive decision logic for the selection and use of PPE.

5.2 Background

TFC-ESHQ-S_SAF-C-02, "Job Hazard Analysis" is the procedure for hazard assessment and control selection at WRPS. The work hazard analysis document produced during implementation of this procedure and TFC-OPS-MAINT-C-02, "Pre-Job Briefing," are the tools for communicating to employees the hazard and controls for a job. If PPE is required, TFC-ESHQ-S_IS-C-02, "Personal Protective Equipment" provides selection criteria and guidance. RPP-23074 "Tank Vapor Chemicals of Potential Concern, Existing Direct Reading Instrumentation and Personal Protective Equipment Considerations" took the newly released RPP-22491 "Industrial Hygiene Chemical Vapor Technical Basis" and considered respiratory protection, protective glove and suit materials for each chemical of potential concern (COPC). RPP-34147 "Tank Waste Dermal Exposure Assessment" evaluated actual dermal tank waste exposures and calculated theoretical worst case exposure scenarios for tank farm activities for dermal and ocular exposure to tank waste, tank vapors, and tank condensate. It was concluded that standard engineering controls, work practices and protective equipment prevent worker contact with tank wastes, and the worst case dermal hazard scenarios are not met. These conclusions are incorporated in TFC-ESHQ-S_IS-C-02, Attachment A. If respirators are required, TFC-ESHQ-S_IH-C-05, "Respiratory Protection" provides selection criteria and guidance. This guidance addresses the requirements listed in 10 CFR 1910.134, "Respiratory Protection" (evaluation of hazards, identification of relevant workplace and user factors that affect performance and reliability, exposure time, exposure concentration, chemical state and physical form of hazard, use of NIOSH approved respirator, respirator assigned protection factor, selection of proper filter/cartridge, cartridge change out schedule). Tank waste vapor exposure characterization studies have been performed looking at sampling and monitoring data collected during waste disturbing and non-waste disturbing activities. Data and conclusions from these studies have been integrated into worker protection control measures. For example, headspace, source, area, and personal data are available for use in IH hazard analyses performed in TFC-ESHQ-S_IH-C-48, "Managing Vapor Control Zones" and documented in a chemical exposure hazard analysis. During emergency response, WRPS emergency procedures cover initial responses to put employees in safe conditions (e.g., evacuate upwind, take cover, etc…) and then the incident commander/HFD, with input from emergency response radiological and chemical hazard assessors, provide direction on the hazard controls for emergency responders.

5.3 The Corrective Actions Taken to Control or Remove any Adverse Impact from the Noncompliant Conditions and the Results Achieved

Inhalation and dermal exposure assessments for tank waste hazards have been documented and determinations of controls, including PPE, have been selected based on a sound and accepted

decision logic. The tank farm procedures and practices implement these determinations. No adverse impacts were identified as a result of the finding. Therefore, no immediate corrective actions were taken.

5.4 Corrective Actions Taken to Identify the Extent of Condition

This finding already applies at the company level. Therefore, no extent of condition was performed for this finding.

5.5 Corrective Actions to be Taken to Correct the Causes and Prevent Further Findings

As identified in the discussion section of the assessment, the TFC-ESHQ-S_IS-C-02, "Personal Protective Equipment" does not provide a pre-determined process for the selection and service life of chemical protective clothing. It is recommended that TFC-ESHQ-S_IS-C-02, "Personal Protective Equipment" be revised to include a reference for guidance on a recommended chemical protective clothing (CPC) material reference for guidance on CPC selection and service life. This will strengthen the tools available to the industrial hygiene professionals responsible for selecting of CPC. It was also identified that the language in TFC-ESHQ-S_IS-C-02, "Personal Protective Equipment" regarding contact with tank waste could be confusing. It is recommended that TFC-ESHQ-S_IS-C-02, "Personal Protective Equipment" be revised to clarify the hazard and controls associated with tank waste contact. The clarifying statements will clearly provide the existing determination for dermal exposure protection from contact with tank waste. The following actions will be taken:

No.	Action	Deliverable(s)	Responsible Manager	Completion Date
CA-02-01	Update TFC-ESHQ-S_IS-C-02, "Personal Protective Equipment" to include a reference for guidance on a recommended chemical protective clothing (CPC) material reference for guidance on CPC selection and service life.	Updated procedure	W. Gaydosh	9/30/09
CA-02-02	Update TFC-ESHQ-S_IS-C-02, "Personal Protective Equipment" to clarify the hazard and controls associated with tank waste contact.	Updated procedure	W. Gaydosh	9/30/09

5.6 Finding Analysis

WRPS has reviewed this finding and initiated corrective actions to promote improvement.

6.0 Finding Number A-09-ESQ-TANKFARM-001-F03

6.1 Finding

Contrary to 10 CFR 851.21, "Hazard Identification and Assessment" there is a lack of specified criteria in the selection of direct reading air monitoring instrumentation and interpretation of results.

6.2 Background

Two procedures and an "IH Monitoring/Sampling Fact Sheet" address the specific selection criteria for direct reading air monitoring instrumentation. The two procedures are TF-OPS-IHT-007 "Using Direct Reading Instruments" and TFC-ESHQ-S_IH-CD-38 "Evaluation and Procurement of Industrial Hygiene Monitoring Instruments".

Guidance for field selection of instrumentation is provided to the industrial hygienist in TF-OPS-IHT-007 "Using Direct Reading Instruments". TF-OPS-IHT-007 Attachment 4 itemizes selection criteria for choosing direct reading instruments for field use. Section 5.1.3 states "SELECT the appropriate direct reading instrument for the contaminants to be sampled, considering:

- Instrument accuracy
- Instrument sensitivity
- Instrument limitations
- Instrument power sources
- Instrument operating temperature ranges
- Instrument response times
- Potential interferences

"IH Monitoring/Sampling Fact Sheet" found on the "Safety & Health Programs" home page provides a detailed guide on what monitoring instrument to select for evaluating different COPC's. Examples from this fact sheet include the use of iTX for ammonia and ppbRAE for Ethylamine.

Guidance for the procurement of new instrumentation is provided in TFC-ESHQ-S_IH-CD-38 Attachment 1, section 3.0 which directs the industrial hygienist to use form A-6003-896 to ensure that all applicable factors have been considered and evaluated prior to the procurement of any monitoring instrument." Form A-6003-896: "Evaluation of Industrial Hygiene Monitoring Instruments Form" lists selection criteria under the column "EVALUATION FACTOR" to include such items as:

- What is the need for the instrument, ie new chemical hazard, improved technology?

- What agent/s does the instrument measure and by what method?
- What are the optimal operating conditions (temperature, relative humidity and pressure) for operation of the instrument?
- What environmental factors will cause interferences such as dust, humidity or electric fields?
- Note the high and low detections limits, the detection range, and sub-ranges (e.g., 0-200 ppm and 20-1000 ppm)
- What is the detection limit?
- What chemicals will cause false positive/false negative readings or other interferences?
- Will the instrument record specific data, such as the average, the peak, and lowest readings?
- List limitations of the instrument that are not specified above.

6.3 The Corrective Actions Taken to Control or Remove any Adverse Impact from the Noncompliant Conditions and the Results Achieved

Several examples of specific criteria for the selection of direct reading air monitoring instruments and interpretation of results have been provided. No adverse impacts were identified as a result of the finding. Therefore, no immediate corrective actions were taken.

6.4 Corrective Actions Taken to Identify the Extent of Condition

This finding already applies at the company level. Therefore, no extent of condition was performed for this finding.

6.5 Corrective Actions to be Taken to Correct the Causes and Prevent Further Findings

As identified in the discussion section of the assessment, reliance on professional judgment creates the potential for errors, inconsistency and difficulty for auditors. While WRPS has an industrial hygiene qualification process (rated highly by the ORP assessment) that enhances our staff's professional judgment, an update to TF-OPS-IHT-007 is recommended to incorporate a decision logic for instrument selection and data interpretation for routine and non-routine monitoring. The update will be communicated to the industrial hygienists. The rationale for the volatile organic compound action level will be provided in an industrial hygiene fact sheet. These actions are intended to reduce the risk of errors and inconsistencies associated with the reliance on professional judgment of industrial hygienists and auditors. The following actions will be taken:

No.	Action	Deliverable(s)	Responsible Manager	Completion Date
CA-03-01	Update TF-OPS-IHT-007 by incorporating documentation of the decision logic for routine and non-routine monitoring regarding instrument selection and data interpretation.	Updated procedure.	M. Jones	9/30/09
CA-03-02	Communicate to the industrial hygienists the changes to the procedure.	Communication to the industrial hygienists.	M. Jones/K. Roueche/L. Gurney	10/30/09
CA-03-03	Document the rationale for the volatile organic compound action level.	Industrial hygiene fact sheet.	M. Jones	7/17/09

6.6 Finding Analysis

WRPS has reviewed this finding and initiated corrective actions to promote improvement.

7.0 Finding Number A-09-ESQ-TANKFARM-001-F04

7.1 Finding

Contrary to 10 CFR 851.21 and 851.23, there is an absence of written direction to incorporate the mandated goal of reducing worker exposure to carcinogens and all other chemicals to levels ALARA, below the Chemicals of Potential Concern (COPC) Occupational Exposure Limit (OEL).

7.2 Background

WRPS fully endorses the best management practice "to maintain chemical vapor exposures as low as is practical." WRPS believes this is a key aspect of our worker protection program. The ALARA concept in industrial hygiene is the anticipation, recognition, evaluation and control of hazards and is based on American Industrial Hygiene Association "A Strategy for Assessing and Managing Occupational Exposures" (AIHA Strategy) as provided in guidance from DOE G 440.1-3.

While there is not a formal description of the ALARA concepts as related to industrial hygiene, the tenets of ALARA concepts (similar to those or the Radiological Control Program) are generally described in our existing procedures and processes. Overall, WRPS procedures, plans and training courses have, through various means, provided direction and approaches to maintaining chemical exposure to as low as is practical.

At the TOC, the defining document for chemical ALARA concepts is the RPP-13033 Tank Farm Documented Safety Analysis. Chapter 8, "Hazardous Material Protection," section 8.4 states the hazardous material ALARA policy and program as the following: "The hazardous material protection program ensures that exposure to hazardous materials are below regulatory limits and where possible additional controls are in place to further reduce exposures." The chapter continues with a description of hazardous material training, hazard identification, administrative limits, occupational medical surveillance, respiratory protection, hazardous material monitoring, instrumentation, record keeping, hazard communication, and occupational chemical exposures. These ALARA concepts are implemented through other safety and health programmatic documents.

Additional carcinogen and chemical exposure direction is found in TFC-ESHQ-IH-STD-11 "Carcinogen Control" and TFC-PLN-34, the "Industrial Hygiene Exposure Assessment Strategy." The primary purpose of TFC-PLN-34, which is based on the AIHA Strategy, is to ensure exposures are characterized and controlled well enough to keep present risks acceptable and to put the organization in the position to manage future risks. Managing future risks is, in part, a function of maintaining exposures to a level that is acceptable.

WRPS believes there is improvement needed to make the chemical ALARA a cohesive program. Actions to improve the program are described in section 7.5.

7.3 The Corrective Actions Taken to Control or Remove any Adverse Impact from the Noncompliant Conditions and the Results Achieved

Programs, procedures and training courses have been identified which provide written direction on maintaining carcinogen and chemical exposures ALARA. No adverse impacts were identified as a result of the finding. Therefore, no immediate corrective actions were taken.

7.4 Corrective Actions Taken to Identify the Extent of Condition

This finding already applies at the company level. Therefore, no extent of condition was performed for this finding.

7.5 Corrective Actions to be Taken to Correct the Causes and Prevent Further Findings

In an effort to improve the WRPS IH ALARA program, actions have been identified. These improvement actions will assist WRPS in providing a comprehensive and cohesive process for maintaining chemical vapor exposures as low as is practical.

We will improve our documents on IH ALARA. A policy statement will be added to our Industrial Hygiene Safety Management Program Plan stating our goal is "to maintain chemical vapor exposures as low as is practical." We will review our plans and procedures to ensure a consistent approach on IH ALARA concepts. We will develop, as part of the ongoing actions related to the Hanford Concerns Council (HCC) Phase I independent review, a sampling strategy that provides a method for management to evaluate program performance in maintaining exposures to tank vapors by reducing uncertainties.

We will develop a communication plan for improving the work force awareness of IH ALARA principles. This plan could include, for example, communication of information about IH ALARA principles and work practices through campaigns (e.g. posters) and use of the Chemical Vapor Solutions Team (CVST).

In addition, WRPS is committed to having an outside review of the IH ALARA process at the TOC as compared to the principles of a radiological ALARA program, to assist in determination of areas where the IH ALARA process could be improved. This outside review will identify gaps for WRPS to determine which elements of ALARA concepts can be better described, defined and implemented through our Safety and Health Programs to support the goal of "to maintain chemical vapor exposures as low as is practical."

No.	Action	Deliverable(s)	Responsible Manager	Completion Date
CA-04-01	Add the policy statement "to maintain chemical vapor exposures as low as is practical"	Revised TFC-PLN-55 Industrial Hygiene Safety Management Program Plan	M. Jones	8/28/09
CA-04-02	Develop and provide to HCC a strategy for continued tank vapor exposure assessment.	New draft document provided for HCC review.	M. Jones	6/22/09
CA-04-03	Review and update TOC IH procedures to provide a consistent message on ALARA concepts	Updated documents	M. Jones	11/30/09
CA-04-04	Develop a communication plan to improve IH ALARA awareness.	New communication plan	D. Tuckness	8/28/09
CA-04-05	Conduct a review of the IH ALARA process compared to a radiation ALARA program and determine areas for improvement	Issue statement of work with schedule to outside reviewer.	F. Beranek	8/28/09

7.6 Finding Analysis

WRPS has reviewed this finding and initiated corrective actions to promote improvement.

8.0 Review and Approval of WRPS Corrective Actions

This CAP was developed by the assigned responsible manager and was approved by the Safety & Health Manager.

9.0 Corrective Action Plan Reporting and Closure

Corrective actions for each Finding will be tracked and monitored using the PER system.

To close an action, the responsible manager must provide objective evidence documenting completion of the actions and verifying compliance to the applicable requirements. Closure documentation will be attached electronically to the associated PER.

Save

Problem Evaluation Request (PER)

WRPS-PER-2009-0900
In Process/Work

PER No	Date of Discovery	Time of Discovery (24:00)	Project
WRPS-PER-2009-0900	05/05/2009	15:40	S&H

Location

OTHER

How Was Problem Discovered

DOE-ORP

Description of Concern or Problem

The U. S. Department of Energy, Office of River Protection (ORP) conducted a Phase I assessment (A-09-ESQ-TANKFARM-001) of the programmatic elements of the Washington River Protection Solutions LLC Industrial Hygiene program during January and February 2009. The assessment was directed at four elements of interest including past assessments, program technical basis and procedures, staff qualifications, and program management. The assessment resulted in four Findings and one Observation including:

A-09-ESQ-TANKFARM-001-OO1: There is a lack of clear, consolidated information. The WRPS IH technical basis is overly complicated and confusing to both workers and outside viewers. There exists an uncharacteristically high element of deference to professional judgment.

Requirement Not Satisfied	Source Document Number

Equipment Identification Number	System Identification

Immediate actions Taken or Planned

Initiated PER.

Recommended Corrective actions

Assign to M. Jones as PIE/CIM

Originator Contact

e-mail

Originators Name	Originators ID	Originators Phone	Date Initiated
Mata, Beth L	H0056284	(509) 373-0422	05/05/2009

SHIFT OPERATIONS REVIEW

Title

ORP Assessment of Industrial Hygiene Program Observation 1

How Discovered	Agency
Externally Identified	DOE ORP

Reportability	SSC Operability	Operability Review	Comp Measures Req
Non-Reportable	N/A	N/A	

Describe actions Taken or Recommended

No additional actions taken or recommended by the BOSO.

SO Reviewer Name	SO Reviewer ID	SO Reviewer Phone	SO Review Date
Higham, Dale B	H0078950	(509) 373-2689	05/05/2009

SCREENING

PER Significance Level	
PIE/CIM	

Independent Assessment Review	Occurrence Report Number	Externally Identified	
No		Yes	
Assigned Responsible	**Facilities Rep / SSO**	**Safety Management Rep**	

Manager			
Jones, Mark W			
Program		**Safety Management Program**	
• N/A		• Industrial Hygiene	
PER Screening Comments			
cc: Dennis Tuckness (Nancy Brown 05/06/09)			
Causal Code			
MGT/Comm/Train	**Human Performance**	**GEMS**	**Equip/Eng/Other**
Failed Barrier	**ORPS Code**	**Functional Area**	**Work Process**
	Not Applicable	Occupational Safety and Health	• Assessments • IH Program
ISMS	**Consequence Code**		
Provide feedback and continuous improvement	• Communications - Inadequate communications, roles, responsibilities		
PER Screening Chair	**PER Screening Chair ID**	**PER Screening Chair Phone**	**PER Screening Date**
Brown, Nancy L	H0088797	(509) 373-0992	05/06/2009
PAAA REVIEW			
PAAA Screening	**PAAA Codes**	**Function Codes**	
PAAA, Non-NTS Reportable	• 10 CFR Appendix A to Part 851 (6)	• Industrial Hygiene	
NTS Report Number	**NTS Report Date**		
Repetitive / Recurrent	**Programmatic**	**Intentional Violation / Misrepresentation**	
No	No	No	
PAAA Screening Comments			
TFC-PLN-47, Section 6.4			
PAAA Reviewer Name	**PAAA Review Date**		
Anderson, Craig E	05/06/2009		
PAAA Approver Name	**PAAA Approve Date**		
Anderson, Craig E	05/07/2009		
SENIOR MANAGEMENT REVIEW/CONCURRENCE			
TF Operations Morning Leadership Call			
N/A			
Instructions for Responsible Manager			
Evaluate suggestion, enter comments and required actions on PIE/CIM tab of the PER. Disposition in accordance with TFC-ESHQ-Q_C-C-01, Problem Evaluation Request.			
Senior Management	**Sr Mgmt ID**	**Sr Mgmt Phone**	**Sr Mgmt Review Date**
Brown, Nancy L	H0088797	(509) 373-0992	05/07/2009
CAUSE ANALYSIS			
Description of Occurrence			
Extent of Condition			
Safety Significance			

Generic Implications
Remedial Corrective Action
Causal Analysis, Apparent Cause and/or Root Cause Analysis
PIE/CIM
Evaluation of PIE/CIM Initiative
ATTACHMENTS
0900723_09-ESQ-076_WRPS_-_[0904160568].pdf
Link to PER
WRPS-PER-2009-0900 PIE_CIM.msg

AUDIT HISTORY

Change Date	Auditor	Comments
05/07/2009 10:04	Brown, Nancy L	Responsible Manager Task Launched by Brown, Nancy L

-- End of Report --
07/09/2009 04:53 PM

Task# WRPS-PER-2009-0900

E-STARS[R] Report
Task Detail Report
07/09/2009 1654

TASK INFORMATION			
Task#	WRPS-PER-2009-0900		
Subject	PIE; ORP Assessment of Industrial Hygiene Program Observation 1		
Parent Task#		**Status**	Open
Reference		**Due**	07/27/2009
Originator	^PER Coordinator	**Priority**	Medium
Originator Phone		**Category**	PER
Origination Date	05/05/2009 1541	**Generic1**	None
Remote Task#		**Generic2**	None
Deliverable	PER Review	**Generic3**	None
Class	None	**View Permissions**	Global
Instructions	*No Instructions*		

ROUTING LISTS

1	Responsible Manager	Active
	Evaluate suggestion, enter comments and required actions on PIE/CIM tab of the PER. Disposition in accordance with TFC-ESHQ-Q_C-C-01, Problem Evaluation Request.	
	• Jones, Mark W - Assign - Awaiting Response - Due Date - 07/27/2009 1630 *Instructions:*	
	• Jones, Mark W - Assign - Withdrawn - 06/30/2009 1113 *Instructions:* Did you contact the originator about the PER? Document your contact in the response window.	
2	Review Initial PER	Inactive
	Review New PER	
	• ^SO(Higham, Dale B) - Review - Concur - 05/05/2009 2233 *Instructions:*	
	• ^PER Screening(Brown, Nancy L) - Review - Concur - 05/06/2009 1547 *Instructions:*	
	• ^Mgr Review - Review - Cancelled - 05/07/2009 1004 *Instructions:*	

ATTACHMENTS

Attachments	1. 0900723_09-ESQ-076_WRPS_-_[0904160568].pdf 2. Link to PER 3. WRPS-PER-2009-0900 PIE_CIM.msg

COMMENTS

Poster	^PER Coordinator (Glaman, Linda R) - 06/30/2009 1114
	extend to 7-27-09 per attached email request. LBG 6-30-09
	Please extend the above referenced PER as follows: RM Mark Jones Due 07/04/2009 Extend 07/27/2009 We have been directed by ORP to have a corrective action plan for this observation. Additional

Task# WRPS-PER-2009-0900

	time is needed to complete. T Bowman for M Jones 6-30-09		
TASK DUE DATE HISTORY			
Modified	06/30/2009 1113 - ^PER Coordinator (Glaman, Linda R)	**New Due Date**	07/27/2009 1630
Modified	05/07/2009 1004 - ^PER Coordinator	**New Due Date**	07/04/2009 1630
Modified	05/07/2009 1004 - ^PER Coordinator	**New Due Date**	07/04/2009 1630
Modified	05/05/2009 1541 - ^PER Coordinator	**New Due Date**	05/07/2009 1630
SUB TASK HISTORY			
Subtask#	WRPS-PER-2009-0900.1		
Subject	PIE; ORP Assessment of Industrial Hygiene Program Observation 1		
Originator	Jones, Mark W (Bowman, Tami A)		
	Routing List	Route List	

		Assignee	Caldwell, Joyce A	**Response**	

-- end of report --

INCOMING CORRESPONDENCE COVERSHEET

CORR-2009-0083

Author	Addressee	Correspondence No.
J. C. Poniatowski/ORP	J. M. Armstead/WRPS	0900723 DOE-ORP: 09-ESQ-076

Subject: CONTRACT NO. DE-AC27-08RV14800 – RESULTS OF ASSESSMENT A-09-ESQ-TANKFARM-001, PHASE 1, "INDUSTRIAL HYGIENE TECHNICAL BASIS"

DISTRIBUTION

Washington River Protection Solutions
WRPS Correspondence Control
JC Allen-Floyd
JM Armstead
F Beranek ((Assignee))
HS Berman
MN Brosee
C Burrows
GJ Johnson
WJ Johnson
MW Jones
MA Lindholm
KJ Rueter
DJ Sansotta
SM Sax
BR Thomas
DT Tuckness

Priority:	**NORMAL**
Assignee:	F. Beranek
Received:	April 16, 2009
Due Date:	5/16/2009 – Respond to the assessment findings as directed by ORP.

WRPS Correspondence Control
For Questions call: 376-0271
Outlook Address: ^WRPS Correspondence Control

U.S. Department of Energy
Office of River Protection
P.O. Box 450, MSIN H6-60
Richland, Washington 99352

APR 15 2009

09-ESQ-076

0900723

Mr. Mike Armstead, Contract Manager
Washington River Protection Solutions LLC
2440 Stevens Center Place
Richland, Washington 99354

Dear Mr. Armstead:

CONTRACT NO. DE-AC27-08RV14800 – RESULTS OF ASSESSMENT A-09-ESQ-TANKFARM-001, PHASE I, "INDUSTRIAL HYGIENE TECHNICAL BASIS"

This letter transmits the results of the U.S. Department of Energy, Office of River Protection assessment of the Tank Operations Contractor "Industrial Hygiene Technical Basis." The assessment was completed on February 23, 2009.

The assessment resulted in four findings. The assessment team concluded that there are deficiencies in the programmatic assessment of new technologies to enhance worker safety and health, the selection and use of Direct Reading Instruments for air monitoring, the incorporation of the goal of applying the concept of "As Low As Reasonably Achievable" (ALARA) to chemical vapor exposures, and the selection process for personal protective equipment.

It should be noted that the Washington River Protection Solutions LLC is being requested to demonstrate how the ALARA concept shall be incorporated into the safety culture with respect to the monitoring and control of chemical vapors, as it is being applied to ionizing radiation hazards.

Within 30 days of receipt of this letter you shall respond to the assessment findings. The response shall include:

- The corrective actions that have been taken (i.e., compensatory measures) to control or remove any adverse impact from the non-compliant condition until sustainable corrective actions are implemented;

- The corrective actions that will be taken to identify the extent of condition, correct the causes, and prevent further findings (i.e., Corrective Action Plan); and

- The date when all corrective actions will be completed verified and compliance to the applicable requirements achieved (i.e., completion of an effectiveness review).

APR 15 2009

If you have any questions, please contact me, or your staff may contact William J. Taylor, Assistant Manager, Office of Environmental Safety and Quality, (509) 376-7851.

Sincerely,

Joseph C. Poniatowski
Contracting Officer

ESQ:RLU

Attachment

cc w/attach:
WRPS Correspondence

RECEIVED
APR 16 2009
WRPS
CORRESPONDENCE CONTROL

Attachment
09-ESQ-076
A-09-ESQ-TANKFARM-001

United States Department of Energy
Office of River Protection
Tank Operations Contractor
Industrial Hygiene Technical Basis Assessment

Final Report
A-09-ESQ-TANKFARM-001
March 10, 2009

Richard L. Urie
Team Leader

EXECUTIVE SUMMARY

The U.S. Department of Energy, Office of River Protection (ORP) conducted a Phase I assessment of the programmatic elements of the Washington River Protection Solutions LLC (WRPS) Industrial Hygiene (IH) program from January 16, 2009, through February 20, 2009. The assessment was directed at four elements of interest: past assessments, program technical basis and procedures; staff qualifications; and program management.

Conclusions

There are many very strong elements to the IH technical basis, including a well qualified staff; an extensive sampling and Personal Protective Equipment (PPE) inventory; proper utilization of accredited laboratories; and a solid funding base. The programmatic element for control, conveyance, and management of sampling data appears to be exceptional. WRPS has established over 80 documents related to IH information and directives. However, there is a missing tier of direction, which normally serves as the bridge between the general instructive programs and implementation. Specifically, there is an absence of written methodologies that normally provide the basis for the selection of PPE and some Direct Reading Instruments, which is a fundamental programmatic necessity. There is also a lack of strategic sample planning and data management, which is reportedly being addressed through the support of an expert IH consultative panel. In addition, there is an absence of a dedicated program for the review or development of new technologies for the purpose of enhancing worker health and safety, as required under 10 Code of Federal Regulations (CFR) 851, "Worker Safety and Health Plan."

An overriding observation of the WRPS technical basis is the prevalence of references made to IH professional judgment. ORP acknowledges and encourages the application of professional judgment, with respect to interpretation of directives and real time response to changes in operational needs or off normal events. However, there is an absence of the basis for decision making that has been critically reviewed, documented, and unilaterally applied to the WRPS operations. In addition, there is a lack of documentation of individualized IH decisions, which results in a lack of on-going and post event accountability. Lastly, the WRPS IH goals and objectives neither stipulate, nor discuss the requirement to reduce chemical exposures to As Low As Reasonably Achievable (ALARA), below the Occupational Exposure Limits (OEL). The absence of this goal is reflected in a prevailing attitude through IH and Industrial Hygiene Technician Staff, that chemical vapor exposures are adequately characterized and controlled with respect to conventional standards. ORP shall closely examine the WRPS health and safety culture in the second phase of the assessment to ascertain the degree in which this is problematic in regards to the impacts to the management of off normal events, continued efforts for improvement, and the incorporation of health and performance based goals.

FINDINGS

A-09-ESQ-TANKFARM-001-F01: Contrary to 29 CFR 1910.120(p)(5), "New Technology Program," 29 CFR 1910.120(o)(1),"New Technology Programs" and 1910.120(o)(2) WRPS has not established and implemented programmatic procedures which direct the evaluation and

introduction of new technologies into the WRPS Environmental Safety Health & Quality group, which includes the IH program.

A-09-ESQ-TANKFARM-001-F02: Contrary to 29 CFR 1910.132(d), 1910.132(d)(1), 1910.132(d)(1)(i), 1910.132(d)(1)(ii), 1910.132(d)(2), 1910.134(c) (1), 1910.134(c)(1)(i), and 1910.120(p)(8), WRPS has not established a written, fully comprehensive decision logic for the selection and use of PPE.

A-09-ESQ-TANKFARM-001-F03: Contrary to 10 CFR 851.21, "Hazard Identification and Assessment" there is a lack of specified criteria in the selection of direct reading air monitoring instrumentation and interpretation of results.

A-09-ESQ-TANKFARM-001-F04: Contrary to 10 CFR 851.21 and 851.23, there is an absence of written direction to incorporate the mandated goal of reducing worker exposure to carcinogens and all other chemicals to levels ALARA, below the Chemicals of Potential Concern (COPC) OEL.

OBSERVATION

A-09-ESQ-TANKFARM-001-O01: There is a lack of clear, consolidated information. The WRPS IH technical basis is overly complicated and confusing to both workers and outside viewers. There exists an uncharacteristically high element of deference to professional judgment.

Acronyms

ABIH	American Board of Industrial Hygiene
ACGIH	American Conference of Governmental Industrial Hygienists
AIHA	American Industrial Hygiene Association
ALARA	As Low As Reasonably Achievable
ANSI	American National Standards Institute
CFR	Code of Federal Regulations
CH2M HILL	CH2M HILL Hanford Group, Inc.
COC	Chain of Custody
COPC	Chemicals of Potential Concern
CPC	Chemical Protective Clothing
DOE	U.S. Department of Energy
DRI	Direct Reading Instrument
ESH&Q	Environmental Safety Health and Quality
HCC	Hanford Concerns Council
IH	Industrial Hygiene
IHT	Industrial Hygiene Technician
NIOSH	National Institute for Occupational Safety and Health
OEL	Occupational Exposure Limits
ORP	Office of River Protection
OSHA	Occupational Safety and Health Administration
PAPR	Powered Air Purifying Respirator
PEL	Permissible Exposure Level
PPE	Personal Protective Equipment
SST	Single Shelled Tank
STEL	Short Term Exposure Limit
TFC	Tank Farm Contractor
TFIH	Tank Farm Industrial hygienist
TLV	Threshold Limit Value
VOC	Volatile Organic Compound
WRPS	Washington River Protection Solutions LLC

Table of Contents

1.0 SURVEILLANCE SCOPE 1

2.0 SURVEILLANCE METHODOLOGY 1

3.0 DISCUSSION 1

4.0 CONCLUSIONS 13

5.0 FINDINGS AND OBSERVATIONS 15

6.0 REFERENCES (From DOE Standard IH Practices, DOE-STD-6005-2001 April 2001) 20

APPENDIX A. Principal Document Review and Comments
APPENDIX B. Industrial Hygiene Technical Basis Assessment of WRPS (PLAN), A-09-ESQ-TANKFARM-001
APPENDIX C. Integrated Safety Management System Evaluation Form
APPENDIX D. Assessment Team Biographies

1.0 SURVEILLANCE SCOPE

The scope of this 2009 Phase I assessment of the Washington River Protection Solutions LLC (WRPS) Industrial Hygiene (IH) program, is limited to the foundation of the program, involving an assessment of plans, procedures, risk assessment documents, staff qualifications, and documented management tools. Within this scope, the U.S. Department of Energy (DOE), Office of River Protection (ORP) team addresses the primary question: "Is WRPS properly planning, and effectively managing an industrial hygiene, occupational exposure assessment, and hazards management program that meets the intent of 10 CFR 851?"

2.0 SURVEILLANCE METHODOLOGY

The methodology of the assessment consisted of four discrete efforts, followed by Generator Assistance Program analysis based on the results of the assessment per the DOE 440.1-8, "Implementation Guide for use with 10 Code of Federal Regulations (CFR) 851." The four elements of the assessment were:

- A review of past assessments conducted by DOE, the Hanford Concerns Council (HCC) – expert panel, the CH2M HILL Hanford Group, Inc. (CH2M HILL) IH Program Health/Analysis presentation to the Executive Safety Review Board (September 25, 2008), WRPS "Industrial Hygiene Safety Management Program Plan-Management Assessment" - 0900116, the WRPS Fact Finding for 702AZ Condensate Drained from Ventilation Duct on December 17, 2008, Report NO. 2008-025; and the National Institute for Occupational Safety and Health (NIOSH), "Health Hazard Evaluation Report 2004-0145-2941;"

- A review and assessment of all available WRPS IH related documents which are generated or owned by the WRPS Environmental Safety, Health, and Quality (ESH&Q) division, plus select and pertinent tertiary documents that are referenced with the IH program documents;

- An evaluation of the IH personnel qualifications by way of a review of staff qualifications cards and through small group interviews of as many staff members as feasible; and

- A series of meetings with the WRPS IH manager and associated review of WRPS IH management records, data bases, and reports that reflect the current level of effort associated with IH treads analysis, program metrics, program planning, budgeting, staffing, self-assessments, and associated corrective actions.

3.0 DISCUSSION

Due to the relatively broad spectrum of the "Industrial Hygiene Technical Basis Assessment Phase I" scope of work; this section is simplified by being organized by the four basic elements, as follows: Review of Past IH Assessments; Document Review; Staff Qualifications; and Program Management. Each of these subsections refers to attachments, which provide specific methods and results or data points. Appendix A is a checklist generated from the performance evaluation criteria, as they pertain to the four primary assessment elements.

3.1 Past Tank Farm IH Assessments

A number of assessments, including two major third-party assessments have been performed on the chemical exposure elements of the Tank Farm IH program, over the last seven years. The two major assessments reviewed include the NIOSH "Health Hazard Evaluation Report 2004-0145-2941," released in July 2004 and the HCC commissioned report by an expert panel, entitled "The Industrial Hygiene Chemical Vapor Technical Basis," dated June 2008. These documents were reviewed to ascertain the historical concerns of the past contractor's program. One management assessment of the IH program was conducted by WRPS, since accepting operations on October 1, 2008, and in addition, ORP surveillance of WRPS response to an abnormal event, included some IH elements.

Under the current WRPS management assessment process, internal staff, including subcontractor personnel, perform an evaluation of the WRPS IH program, submit the results to the IH Program Manager and enter results into the Problem Evaluation Request system for tracking corrective actions. The results of the management assessment (WRPS-0900116, "Industrial Hygiene Safety Management Program Plan-Management Assessment," dated January 19, 2009) indicated four areas in need of improvement, improve an element of heat stress monitoring in a particular survey, maintaining procedures not used on a regular basis, issues on Right-to-Know Stations, and hierarchy of controls required by 10 CFR 851. The WRPS management assessment appears to be comprehensive in nature and some of the observations noted by WRPS are consistent with the ORP Assessment Team's observations, including the issue of some procedures not being updated since the implementation of 10 CFR 851 and deficiencies in the Personal Protective Equipment (PPE) selection process.

There are no WRPS assessments of IH practices during off normal events, other than a fact finding report at this time. The "ORP Management Concern S-09-ESQ-TANKFARM-003 WRPS Response to Abnormal Events" report was in draft form at the time of this assessment. However, it is of value to this assessment, as it provides direction in the review of IH procedures, relative to the chemical exposure risk assessment process, the documented process for selection and use of PPE, post event communications with the Hanford medical provider, selection and use of air monitoring instruments, and identification of exposure source materials.

The tank farm contractor transition briefing entitled "Industrial Hygiene Program Health/Analysis" dated September 25, 2008, provided only minimal amount of performance metrics of the IH program. Having an adequate set of metrics is needed since the overall goal of an IH program is the prevention of occupational disease, illnesses, and disorders that impact the health of workers; interfere with operational stability; and negatively impact the comfort and morale of personnel. As such, metrics that allow for the measurement and tracking of adverse impacts are necessary for the correction of causative factors in meeting this goal. Compliance with standards such as Threshold Limit Values (TLV) is a mandatory, secondary objective that assists in meeting this goal. Effort should be provided in developing leading indicators as much as possible.

3.2 Document Review

3.2.1 General

The Assessment Team reviewed over 80 WRPS IH related procedures, fact sheets, supporting documents, or sets of documents in the course of the assessment. They were comprised of top tier health and safety and IH management plans, staff qualifications plans and requirements, technical directives, quality assurance directives, operational procedures, performance tracking documents, an exposure monitoring data base, and WRPS web page based hazard communication resources. Appendix A of this assessment contains a list of those documents and observations associated with each document, as warranted.

The collective set of programmatic documents address a cadre of preventative medicine elements including hearing conservation, ergonomics, heat and cold stress, illumination, blood borne pathogens and others addressed in Appendix A. Of these elements, the thrust of the program is dedicated to the evaluation and control of chemical exposures. The chemical monitoring and control aspects of the written programs contain some excellent, advanced level efforts that have been developed as part of the technical basis for the understanding and control of chemical exposure associated with the waste constituents. Documents pertaining to the characterization of tank headspace vapors, personnel exposure sampling results, occupational exposure limits and liquid chemical constituents form the technical basis which serves as baseline risk assessments for the decision logic that follows in procedural documents. In addition, there are documents which provide very specific directions on IH monitoring, procedural processes, PPE, and administrative controls. Many of these documents at the secondary and tertiary levels are highly instructive and self-explanatory.

However, there are four general observations germane to a number of IH related procedures, one of which was also self-identified by WRPS. They are:

- The first is a lack of written core decision logic, which results in excessive deference to an IH professional judgment approach;

- Secondly, the collective state of the programmatic elements are very voluminous, somewhat contradictory (see "Example of Concern" on next page) and difficult to interpret at the implementation level. Both manifestations of the program may be cause for confusion and have a negative impact on the functionality and credibility of the program as a whole, particularly from interested parties not involved in the day-to-day IH operations.

- In addition, a sub-set of programmatic IH procedures pre-dated 2005 should have been revised to include as required by 10 CFR 851.23(a)(9) American Conference of Governmental Industrial Hygienists (ACGIH), "Threshold Limit Values for Chemical Substances and Physical Agents and Biological Exposure Indices," 2005 referenced

TLVs when they are lower (more protective) than permissible exposure limits found in 29 CFR 1910. For example, TFC-ESHQ-IH-STD-06, "Hearing Conservation Program," Revision A, dated October 28, 2004, was not revised to include the 2005 TLV, it should be noted the actual TLV in this case was not revised in 2005 it remains, 85 decibels, A-weighting scale [dBA] 8-hr Time Weighted Average;

- Communications between WRPS and AdvanceMed Hanford regarding medical surveillance, is not well defined. Medical surveillance stipulated for either pre-placement or annual exams typically do not provide the medical surveillance requirements to be met by the occupational medical contractor or in the absence of this information feedback – verification that the requirements were met before placement or continued placement. For example, 29 CFR 1910.1001(I), "Medical Surveillance" requires a specific pre-placement examination before an employee can be designated as an asbestos worker but TFC-ESHQ-IH-STD-04, "Asbestos Control – Facility Management/General Industry" does not document how these pre-placement requirements are transmitted to the occupational medical office or verified to have been met before placement;

- Lastly, the programmatic goals fail to address the requirement for monitoring and controlling chemical exposures to As Low As Reasonably Achievable (ALARA), below the Occupational Exposure Limits (OEL). The existing written goal of maintaining exposures below 50% of the OELs is not consistent with the requirements stipulated in DOE Orders, nor with the ACGIH, 2005 TLV booklet, incorporated into 10 CFR 851. The application of an ALARA goal is not only mandated, but is of particular significance to the health and safety of workers who deal with a vast mixture of chemicals, of unknown cumulative toxicological effects. In addition, there is no written consideration of the margin of sampling error associated with the existing sample collection and analysis utilized, nor for the use of Direct Reading Instruments (DRI) to monitor for short term exposure limits.

  Example of Concern:

  TFC-ESHQ-S-IS-C-02-RevB-12 (February 2008) states: "Some of the chemicals in tank waste and condensate can damage the skin, irritate the skin, or be absorbed through the skin"

  RPP-34147, Revision 0 (June 2007) states as the last statement of the conclusions: "Therefore, dermal exposure hazards from tank waste is extremely low and requires no additional Controls"

  Fact Sheet EH-0607 (October 2007) "Dermal Protection from Tank Waste, Condensate and Tank Vapors" refers to RPP-34147 for direction, suggesting (but unclear) that neither silver shield® Chemical Protective Clothing (CPC) or any other designated CPC is warranted for Tank Farms Operations at the listed tank sites.

3.2.2 Lack of Clear, Consolidated Information

WRPS maintains a hierarchy of programmatic documents, which flow down from general, to more specific information and directives. ORP recognizes that such a process is necessary due to the voluminous nature of the materials. However, the process, which has evolved out of response to needs, is cumbersome and sometimes lacks clarity in an end result. As an example, a key document is the "Tank Operations Contractor Health and Safety Plan." Normally, such a plan contains necessary instructions to workers as a standalone, pragmatic document which addresses eight fundamental subjects, mandated in 29 CFR 1910.120 (P). The sections of the WRPS document that address IH subject matter, collectively refer to 32 links necessary to understand the basic components, which in turn refer to over 200 secondary links. The difficulties in locating and extracting specific, operational IH information were reflected by Industrial Hygiene Technicians (IHT) during a small group interview. Yet the documents as a whole, fail to adequately address three of the eight mandated items. The subjects that are absent or deficient are: 1) Medical Surveillance; 2) New Technologies Program; and 3) Emergency Response, including PPE.

Example: INDUSTRIAL HYGIENE INSTRUMENTATION PLAN, TFC-PLN-64, REVISION B-1, summarizes the selection of DRIs as a skill of IH Professional decision as follows: "Instruments will be selected by the project Industrial Hygienist (IH) as part of the development of the sampling/monitoring plan and will be based on the hazard to be measured"

Another confusing element pertains to the "IH Exposure Assessment Strategy" (TFC-PLN-34, Revision D-2), which discusses Short Term Exposure Limits (STEL) Plan and Ceiling Limits, but is non-specific in the application to the strategy. A sub-section in Appendix B of the plan, states: "Ceiling limits are generally airborne concentrations which should never be exceeded...Certain chemicals have STELs or ceiling limits that have unique sample duration periods. Averaging times for the TF COPCs are listed in Appendix B." However, no further instruction is provided in Appendix B. (Note: this section is referenced as being adapted from the American Industrial Hygiene Association (AIHA) 1998, Leidel 1977, and ACGIH. It appears that the supporting appendices were not included in the WRPS plan.)

3.1.1 Personal Protective Equipment Decision Logic

A key element within the WRPS programmatic directives, which lacks reproducible methodology is that required for the selection of PPE. Although there are a number of good documents describing Chemicals of Potential Concern (COPC) and individual considerations of selection, there is no indication as to what PPE is available onsite; and neither a process nor a defensible, pre determined selection of PPE, which can be consistently utilized by the IH Staff.

3.2.3.1 Chemical Protective Clothing and Chemical Eye Protection

A review of documents related to PPE discuss tank waste chemical constituents relative to dermal exposure, but fall short of a discussion of the specific selection of CPC and eye protection associated with the toxicants of the waste and a pH of 13 (highly corrosive). In addition, there is no consideration of precautionary measures for such off normal effects as a splash involving a high body surface area, and/or the eyes. The "Personal Protective Equipment" TFC-ESHQ-S-C-02 is the baseline directive for the selection of chemical protective clothing and eye protection, yet the section on eye protection is limited to safety glasses for impact protection only. The CPC and glove section of The "Industrial Hygiene Exposure Assessment Strategy" TFC-PLN-34 D-2, refers to this document for direction on skin protection. A supporting document, the "Tank Waste Dermal Exposure Assessment" RPP-34147, serves as an extensive study of potential chemical absorption and justification for not issuing Silver Shield® or 4H® gloves for stipulated tank farms. However, each of the documents fail to address the following significant items:

- Protection from skin burns or dermatitis due to chemical contact of the hands;
- Protection from skin burns or large surface area chemical absorptions, from a large scale splash;
- the health impacts and protection of the eyes associated with liquid splash; and
- the documents collectively fail to provide a pre-determined decision or a clear decision process for the selection and service life of CPC. Such common considerations associated with multiple chemical breakthrough times, permeation rates, and degradation of various materials used in the selection and use of CPC is absent.

> **Note:** TFC-ESHQ-S-IS-C, Rev B-12 (PPE), Section 6.3.1 states that ***some chemicals in tank waste and tank condensate can damage the skin, irritate, or be absorbed by the skin and to consult IH in the work planning process.***

The IH technical basis requires CPC decision logic and methodologies. The level of effort necessary to fill in the gaps is potentially minor, but significant to the process.

3.2.3.2 Respiratory Protective Equipment

The Tank Operations Contractor Health and Safety Plan states the following:

"Personal protective equipment includes use of respiratory protection approved by Industrial Hygiene, either as specified in job procedures, Tank Vapor Information

Sheets, or job hazard analyses or through voluntary use even though not required for compliance with the occupational exposure limit."

In addition, the WRPS Respiratory Protection Plan is a 54-page document, of which two pages of text and a single page figure are provided on the subject of respirator selection. The information provided, is in general terms and includes a statement that **"Specific guidance for respirator selection is available from NIOSH and OSHA."** Neither document provides specific information that is relevant to what respirator options are available to WRPS, the applicability of respirator cartridges to various COPCs, including carcinogens or mixed contaminant considerations; and those respirator ensembles that are not approved for specific applications, such as an acid gas cartridge is not approved for nitric acid nor hydrogen sulfide gas. No other documents were observed to address the decision logic for consistent decision making by IHs throughout the program.

During the course of interviews one IH professional discussed a recent event, in which a small quantity of methylene chloride was spilled and the IH was tasked with taking photos of the spill scene. The IH professional judged the exposure was below the TLV for methylene chloride, but utilized respiratory protective equipment on a voluntary basis. The respirator selected for the task was a Powered Air Purifying Respirator (PAPR) with (presumably) an organic vapor cartridge. The use of a PAPR was made in error, on two accounts: 1) PAPR is not approved for methylene chloride by manufacturers due to poor adsorption to activated carbon; and 2) Occupational Safety and Health Administration (OSHA) specifically mandates the use of supplied air respirators for potential exposure to methylene chloride vapors exceeds the Permissible Exposure Limit (PEL) or STEL (29 CFR 1910.1052(g)). In addition, there was no documented effort to perform a simple ventilation calculation to document the PEL or STEL was not exceeded. The professional judgment exercised in this situation demonstrates a potential outcome associated with the lack of written selection protocols and directions. Additionally, there is no common mode of documentation on the selection process of respiratory protection by the IH Professional. This in turn, leads to the inability of a technical peer review and a single point error for the respiratory selection process. Professional judgment alone is an insufficient technical basis for the selection of respiratory protection. WRPS must identify decision logic for unilateral application at tank farms.

3.2.4 Clarification of DRI Applications and Decision Logic

There are excellent documents within the WRPS program, which describe the use and calibration of IH instruments and a significant amount of data available for the characterization of COPCs. However, there is an absence of written directives or fact sheets that specifically demonstrate the applicability of some DRIs relative to what is being surveyed in sampling plans and the basis for turn back values. There are also tables which list the COPCs and the appropriate instrument or reference to a pump or SUMA® method, however, there is no summary for such operational and interpretative needs as the detection limits for the DRIs, cross sensitivity & correction factors, the range

relative to the COPCs and therefore, what determines a DRI action level. This absence of standardized criteria was reflected in an interview with IHTs, as inconsistencies in the assignment of DRIs for similar operations by different IHs. The following example indicates a failure associated with the absence of decision logic:

Example: Tank Farm Work Instruction WDL#111243, dated December 12, 2008, calls for the monitoring of organic and ammonia vapor, yet provides action levels for the described task as follows:

- Organic Vapors 2 ppm
- Ammonia 12 ppm
- Formaldehyde 0.2 ppm

The following failures occurred:

1. Formaldehyde cannot be detected by the prescribed instruments*.
2. Formaldehyde, by virtue of multiple toxicological risks, including carcinogenicity, irritation, and pulmonary sensitization, is a priority COPC, as evidenced by the lowest OEL.
3. Yet, the document fails to identify that the formaldehyde OEL is a ceiling value, meaning that an exposure of 0.3 ppm is not to be exceeded. This is a contradiction to the WRPS IH Exposure Assessment Plan (3.11) that mandates screening COPCs and controlling exposure to below 50% of the OEL. Not only is the action level above 50%, these action levels are intended for time weighted average exposures – not ceiling limits, which could instantaneously be exceeded.

*ORP confirmed that formaldehyde is a not COPC to be monitored at this location per the TVIS, and reference was mistakenly made on this work instruction.

ORP confirmed that formaldehyde is not a COPC to be monitored at this location, per RPP-RPT-29262, A-Prefix Tank Farms Vapor Hazard Characterization Report, Revision 0 and this reference was a quality assurance error on the work instruction, not a technical omission.

The WRPS IH technical basis does not offer a clear, documented decision logic and justification for utilizing or not utilizing DRIs for assessing possible excursions of exposure above baseline personal exposure data, as stated in Section 3.11 of TFC-PLN-34, Revision D-2, "IH Exposure Assessment Strategy." This plan does identify in Attachment E, a series of factors to be considered in the establishment of DRI action limits, and states: "The Safety and Health Director will review current screening action levels for appropriate conservatism," - a reference to professional judgement. Therefore, in the absence of decision logic, a review was conducted of the flow down of documents on this subject, which included the Tank Farm Chemical Exposure Hazard Analysis (series of reports), Tank Farms Vapor Characterization Report (series), Management of Vapor Control Zones, Instrumentation instructional documents (series), Fact Sheet:

"Monitoring for COPCs in the Tank Farm," and representative IH Monitoring and Sampling Plans, and Work Hazard Analysis documents. Questions that remain, would then include: Which Volatile Organic Compounds (VOC) are detected within the range and sensitivity of a 10.6 ev Photo Ionization Detector and which are not? When is a flame ionization detector then used and for what sub section of the COPCs? What common non VOCs such as N-Nitrosomethylethylamine, nitrous oxide, and mercury are not being monitored and why not? Are correction factors applied to combustible gas indicators calibrated with isopentane, but used primarily for hydrogen monitoring? What are the margins of error and interfering compounds to be considered for use of DRIs? These elements of the IH Exposure Assessment strategy appear to be absent. ORP recognizes that DRIs are an important element of the overall strategy, and that there are limitations in their application; however, the process of determining the use, limitations, and associated applications must be documented, to support designated use.

Formaldehyde has a ceiling value (not to be exceeded) of 3 ppm, but a WRPS action level of 2 ppm. The accuracy of the detector tube may range from +/- 35% to +/- 50%, which indicates that ceilings could be exceeded before actions are initiated. In addition, detector tubes are cumbersome, time consuming to operate, and difficult to read. The logistics of the DRI sampling and the margin of error suggest that either the action level or the mode of DRI sampling may not have been subjected to the same decision logic as other COPCs, indicating inconsistency.

3.3 STAFF QUALIFICATIONS

WRPS has an extensive staff of 54 IH professionals, which includes 3 managers (of which one is certified in IH), 9 industrial hygienists (of which 5 are certified in IH) and 32 IHTs, who are represented under the collective bargaining agreement.

There are qualifications standards which identify baseline requirements and responsibilities for IH Professional (TFC-BSM-TQ-STD-01, "Technical Staff Qualification Requirements") and IHT (TFC-BSM-TQ-STD-07, "Industrial Hygiene Technician Training and Qualification Requirements.") In addition, WRPS maintains both IH and IHT qualification cards (350882, "Qualification Card for Industrial Hygiene Professional," Revision 0804.1 and 350292, "Qualification Card for TOC Industrial Hygiene Technician," Revision 0608.1). The process does not separately address specialty positions such as the IHT Lead nor does it address any special requirements for the IHT responsible for being the IH equipment custodian or respiratory protective equipment custodian.

The IH professional qualifications standard and process is relatively rigorous. The IH professional qualification process is primarily directed at having a Bachelors degree in IH or related science, two years of IH experience and one year of IH experience in the nuclear industry or equivalency; plus extensive required reading, self-study and procedural

orientation. The IH professional is required to obtain 24 hours of continuing education per year. A majority of the IH professionals on staff hold current certifications through the American Board of Industrial Hygiene (ABIH). A sample review of completed IH professional qualification card was not part of the scope of Phase I of the assessment.

The IHT qualification process requires an Associate Degree in safety and health technology, applied science or related science, one year job related experience or equivalent combination of education and experience plus extensive in-house training on fundamentals and instrumentation. The IHT process does include hands on training in the classroom and periodic updates on seldom used instruments. Sample observations of IHT process qualification or requalification was not part of this assessment, but will be part of the Phase II assessment.

Feedback from group interviews involving 31 of the 54 IH professional staff found them to be very aware of the Tank Farm IH issues. The majority of the IH professionals on staff have extensive commercial and DOE Complex experience in the subject areas of the assessment. The IH professional staff was very open and provided their candid professional opinion of the current WRPS IH program and areas for possible improvement (e.g., training). A common questioned asked by the Assessor's during the interviews were on the subject of level of effort expended on tank farm vapor sampling – over board, too little or just right. The consensus was that the vapor sampling was larger then should be in relationship to the commercial industry but it was understood and accepted. The morale of the IH Professional staff seems to be holding up during the last few years both CH2M HILL/WRPS have been able to maintain a high level IH staff (it should be noted a current WRPS employee is going to take part one of the ABIH certification process this coming June). There was common consensus among the WRPS IH professional staff that there is generally room for improvement of the program but no other portion of the IH program is Less Than Adequate due to the attention being given to the Tank Farm vapor issue. Another common question asked by the Assessor's during the interviews was in regards to the nature of interface or projects which ally the fear of workers and result in a prudent level of risk information regarding Tank Farm vapor issues; for which several interfaces were described including the Chemical Vapor Solutions Team, Presidents Council, and Chemical Hazard Awareness Training. However, it appears a sustained effort to provide risk information to workers about historical and ongoing sampling results, including IH instrument capabilities and limits in relation to the radiological instrumentation has not been accomplished.

The control of IHT field data forms, Chain of Custody (COC), conveyance to IH records, management of sampling data, and distribution of employee occupational exposure notification is controlled by TFC-ESHQ-S_IH-C-46, "Industrial Hygiene Reporting and Records Management," Revision B-1. The electronic record copy of sampling is maintained on the Tank Farm Industrial Hygiene (TFIH) database from transposed field notes and backed up every evening on hard drive. During discussions with the first group of IHT it was very clear they understood the rules of COC. The ORP field observations of sampling taken by IHTs and conveyance of the sample media through processing and records management will be a portion of the Phase II assessment. Interviews with the WRPS personnel responsible for maintaining the TFIH database appear to be well versed in the capability of

TFIH database and associated software. The TFIH database software is currently maintained by Lockheed Martin Services, Inc.

A majority of the IHT have at least five or more years experience working as IHT in Tank Farms or at the Hanford Site. Based on interviews the IHTs who have responsibility as the IH equipment custodian and respiratory expert have extensive knowledge (both have over 20 years Hanford experience) of their respective fields and were able to discuss in adequate detail technical subjects of their respective assigned job areas. One follow up question to WRPS management was on the succession planning in case either IHT decides to retire, the feedback provided was that the respiratory protection program is well covered but given the technical complexity of the IH equipment custodian duties, there were succession issues which are being actively pursued. The Field IHTs appear to have an adequate understanding of the basics of the most commonly used IH instruments. Based on response to questions, the IHT provided a mixed response to the ease of use of IH procedures and sampling plans, on occasion a work pause was needed for clarification. Another common theme among the IHT, was there was different responses based on the same vapor hazard between Base Operations, Single-Shell Tank (SST) Retrieval, and Closure, including the area of down posting a Vapor Control Zone. Not all IH sampling plans require personnel monitoring/sampling in the absence of it being mandated as part of the work task. There is a general reluctance for worker's to wear the sampling apparatus on a voluntary basis, as there is a complaint of it being cumbersome.

3.4 Program Management

The WRPS IH Management efforts address a cadre of departmental elements such as staff training, budgeting, data management, quality assurance, scheduling, review and updating of written programs, and strategic planning. WRPS IH program management is centered within the ESH&Q group of WRPS, although the majority of IH personnel are deployed to Base Operations or SST Retrieval and Closure for operational support. The IH program manager is a Certified Industrial Hygienist and responsible for central functions such as program metrics, data management, technical basis risk assessments, and primary procedural components.

3.4.1 Goals, Metrics and Trends Analysis

The current state of the sample data is relatively unprocessed, other than through the tracking of constituent results above the 10% and 50% OEL status for existing COPCs. However, WRPS is currently in the process of re-assessing the baseline data acquired. As part of this effort, they are planning the consolidation of the data, in a manner which allows for the assessment of both the statistical approach to be used in a re-characterization of potential exposures and in the identification of data gaps. This effort will in turn, drive the number and location of additional screening and routine monitoring efforts. The methodology will reportedly be developed in conjunction with an independent expert IH panel.

There is an ongoing effort to consolidate data and assimilate upward or downward trends in other IH program elements such as hearing conservation, non-ionizing radiation, heat stress, cold stress, and ergonomics. It is noteworthy that WRPS IH managers and staff appear to agree per interviews, that the vapor control program has monopolized their resources and there is some frustration that: 1) they have exceeded industry standards in addressing the concern; 2) there is no serious vapor health threat; and 3) other programmatic areas of need are not being addressed as they would prefer.

Example of WRPS Sampling Strategy under consideration

Frequency of sampling (low-high)

Carcinogen	H	H	H
Highly Toxic	M	H	H
Irritant	L	M	H

% of OEL----------)

3.4.2 The Role of Professional Judgment

WRPS points out that it maintains a high caliber of staff and that professional judgment is a necessary element to the program. In the factual accuracy response, WRPS states: "The American Conference of Governmental Industrial Hygienists and the American Board of Industrial Hygiene both recognize that professional industrial hygienists must evaluate data and information and make professional judgments."

ORP recognizes not only the value, but the necessity of professional judgment - particularly in the event of off normal operations. Such judgments is based not only on training and experience, but also on baseline programmatic guidelines that have been reviewed, approved, and incorporated into the programmatic foundation of the health and safety program. It is neither feasible nor desirable to attempt to dictate directives for variables that occur with environmental and operational dynamics. However, the fundamental methods in which decisions will be made, in a consistent, defensible mode is essential to the credibility of the program. As an example, NIOSH, arguably the international subject matter expert on respiratory devices devotes 41 pages to the process

of respirator selection in the "NIOSH Guide to Industrial Respiratory Protection." A professional judgment is required in the understanding and application of this document. However, the narratives, checklists and flow charts are provided to "insure uniformity and adherence" to established methods established jointly by NIOSH and the Occupational Safety and Health Administration (OSHA). Similar guides, established as industry standards are available for the selection of CPC, eye protection and other PPE elements. All of these guides require professional judgment in the application process, with respect to the vast mixture of COPCs and environmental conditions. What is missing from WRPS is clearly stated policies with respect to: 1) the need; 2) the application; 3) WRPS inventory or options available; and 4) standard methods for decision making.

ORP acknowledges that WRPS has some elements of the selection process incorporated into programmatic documents, such as a discussion of the service life of respirator cartridges and an extensive study on the application of silver shield® gloves and mercury exposure. Yet, there are major elements missing and most importantly, no standard means of directing the use of those elements in a cohesive fashion, and there is no defined process for documenting the basis for the decisions made in the absence of standard methodologies.

The same is true with respect to broad range DRIs. Table 1 of the "Monitoring for COPC in Tank Farm Vapors" list instruments that respond to multiple COPCs, but does not address the means of discriminating amongst those with very low TLVs and those that have high TLVs. There appears to be a mandate for utilizing detector tubes for some, and broad range instruments such as the TVA and ppbRAE for others. Some COPCs appear to be monitored by either option. The argument of utilizing professional judgments for the selection of instruments is only defensible, in the presence of a sound technical basis, which provides each IH with the pre determined range, sensitivity, correction factors and unknowns associated with the DRI table. To assume that each IH has performed this task independently in a correct, consistent manner and maintains the basis for the decision logic is not prudent. In addition, there is no evidence to suggest that such factors and thought process, are in turn, documented with each work instruction or operational document.

The level of effort required to either: 1) provide pre established decisions for PPE and DRIs for the waste and condensate per Tank farm; or 2) to provide decision logic directly, with the aid of internet links is minimal. To have this fundamental element absent from both a written PPE plan and sampling strategy plan is not the industry norm.

4.0 CONCLUSIONS

4.1 Positive observations and trends

- The breadth and detail of most programmatic WRPS IH documents is very good.
- The effort on evaluating baseline chemical hazards has been very advanced.

- The program for control, conveyance, and management of sampling data appears to be exceptional.

- The WRPS Staff offers considerable experience, held to high qualification standards, self-confident and professional.

- The WRPS IH related instrumentation, data base, and overall resources are exceptional.

- WRPS is upgrading risk communication process, including the use of outside subject matter experts.

- WRPS is pro actively supporting an independent panel for additional vapor monitoring and control considerations.

- WRPS is reportedly improving worker access to material safety data sheets through the establishment of an electronic on-line Material Safety Data Sheets program. This action appears to be prompted by two observations that result from the WRPS self-assessment, finalized on January 19, 2009.

4.2 Opportunities for Improvement

- The compendium of IH Information and directives could be consolidated for IH and workers, in a manner more easily acquired and understood.

- WRPS should incorporate exposure characterization and control goals and objectives into the IH technical basis.

- WRPS should define the range for professional judgment within the IH program to a reasonable extent within the technical basis documents.

- WRPS should review and evaluate worker occupational illness reporting as an element of the hazard identification and assessment process, per 10 CFR 851.21(7) and 10 CFR 851.26 94)(b). The consideration of reported target organ or systemic effects and related causative agents within the tank farm may be an important added element of the IH strategy. The overall goal of the compliance with this requirement being the evaluation of reports in a manner which allows reconsideration of the effectiveness of current protective measures with regards to the monitoring and control strategy. For example, in the event that asthma and related reactive airways disease is identified as a complaint of tank farm workers and recognizing that formaldehyde [a COPC] has a causal link to asthma, special consideration may then be directed at increasing the nature and frequency of formaldehyde monitoring.

4.3 Assessment Follow-up Items

As part of a future assessment (Phase II), actual field implementation of the documented WRPS IH program will be evaluated with special emphasis on:

- Observations of IH Technicians going through re-qualification or initial qualification, actual sampling (source, personnel, or area) and processing of sample media for laboratory analysis and execution of the Work Instructions/Job Hazard Analysis (TFC-ESHQ-S_SAF-C-02, "Job Hazard Analysis," Revision D-5). The IH Professionals qualification card process consists mostly of required reading with some actual case studies like assigning DRIs and sample data analysis.

- Per several months of observation, formal interviews, and review of one off-normal event (702-AZ); there is a general concern that the prevailing opinion within the WRPS IH department, that Tank Farm static chemical vapor and condensate exposures are fully characterized and controlled, is having negative impacts the degree of WRPS vigilance in anticipating, preparing for, and responding to off-normal events and secondarily, assessments of new or improved control measures. As part of Phase II the assessors will perform field assessment of drills for off-normal waste release and actual should any should occur.

- The process of decision making in regards to PPE and instrumentation shall be closely evaluated.

- The monitoring, controls and associated documentation of off-normal event decision making.

- The effectiveness of the sample and data quality assurance process.

- The nature of the safety culture within WRPS.

5.0 FINDINGS AND OBSERVATIONS

5.1 Findings

A-09-ESQ-TANKFARM-001-F01: Contrary to requirements WRPS has not established and implemented programmatic procedures which evaluate and introduce new technologies into the WRPS ESH&Q Assurance group, nor IH program. WRPS has clear evidence that portions have been made, such as the addition of upgraded IH instrumentation. A formal and concerted effort to periodically evaluate new technologies for worker health and safety is an important, but missing feature of this high end health and safety program.

Requirements:

29 CFR 1910.120(p)(5), "New Technology Program" The employer shall develop and implement procedures meeting the requirements of paragraph (o) of this section for introducing new and innovative equipment into the workplace.

1910.120(o)(1): The employer shall develop and implement procedures for the introduction of effective new technologies and equipment developed for the improved protection of employees working with hazardous waste clean-up operations, and the same shall be implemented as part of the site safety and health program to assure that employee protection is being maintained.

1910.120(o)(2): New technologies, equipment, or control measures available to the industry, such as the use of foams, absorbents, neutralizers, or other means to suppress the level of air contaminants while excavating the site or for spill control, shall be evaluated by employers or their representatives. Such an evaluation shall be done to determine the effectiveness of the new methods, materials, or equipment before implementing their use on a large scale for enhancing employee protection. Information and data from manufacturers or suppliers may be used as part of the employer's evaluation effort. Such evaluations shall be made available to OSHA upon request.

Discussion:

WRPS has not established and implemented programmatic procedures which evaluate and introduce new technologies into the WRPS ESH&Q Assurance group, nor IH program. There is clear evidence efforts have been made, such as the addition of upgraded IH instrumentation. However, given the history of the tank farm vapor exposure monitoring & controls challenges and the history of abnormal events, a formal and concerted effort to periodically evaluate new technologies for worker health and safety is an important, but missing feature of this high end health and safety program.

A-09-ESQ-TANKFARM-001-F02: Contrary to requirements WRPS has not established written, comprehensive decision logic for the selection and use of PPE. WRPS has developed risk assessment documents, as well as a respiratory protection plan and PPE plan. However, there are no defined action levels and selection criteria available for review for respiratory protective equipment, CPC, nor chemical protection of the eyes; and there is no element that addresses the selection process or protocol of use for an emergency response.

Requirements:

29 CFR 1910.132(d): Hazard assessment and equipment selection.

29 CFR 1910.132(d)(1): The employer shall assess the workplace to determine if hazards are present, or are likely to be present, which necessitate the use of PPE. If such hazards are present, or likely to be present, the employer shall:

29 CFR 1910.132(d)(1)(i): Select, and have each affected employee use, the types of PPE that will protect the affected employee from the hazards identified in the hazard assessment;

29 CFR 1910.132(d)(1)(ii): Communicate selection decisions to each affected employee;

29 CFR 1910.132(d)(2): The employer shall verify that the required workplace hazard assessment has been performed through a written certification that identifies the workplace evaluated; the person certifying that the evaluation has been performed; the date(s) of the hazard assessment; and, which identifies the document as a certification of hazard assessment.

29 CFR 1910.134(c) (1): In any workplace where respirators are necessary to protect the health of the employee or whenever respirators are required by the employer, the employer shall establish and implement a written respiratory protection program with worksite-specific procedures... The employer shall include in the program the following provisions of this section, as applicable:

29 CFR 1910.134(c)(1)(i): Procedures for selecting respirators for use in the workplace;

29 CFR 1910.120(p)(8): Elements of an emergency response plan. The employer shall develop an emergency response plan for emergencies which shall address, as a minimum, the following areas to the extent that they are not addressed in any specific program required in this paragraph.

29 CFR 1910.120(p)(8)(ii)(K): PPE and emergency equipment (other items not included).

Discussion:

WRPS has developed risk assessment documents, as well as a respiratory protection plan and PPE plan. However, there are no defined action levels and selection criteria available for review for respiratory protective equipment, CPC, nor chemical protection of the eyes; and there is no element that addresses the selection process or protocol of use for an emergency response. In addition, there is an absence of service life criteria for CPC. The absence of a decision process or a documented, designated CPC material extends beyond the chemical oriented elements of the program and includes a deficiency in the Bloodborne Pathogen Exposure Control Plan. These items are of the most basic type of information to be made available to workers through the written safety and health program. A number of IH documents make reference to consulting the IH, deferring to the IH "professional judgment."

A-09-ESQ-TANKFARM-001-F03: There is a lack of specified criteria in the selection of direct reading air monitoring instrumentation and interpretation of results. There is an absence of specific methodology on the selection and interpretation of nine or more different DRI used to monitor for the acute hazard of COPC. Such DRI warrant both clear decision logic for selection and instructions of interpretation relative to other instrument readings. The results associated with the lack of written guidance and criteria was manifested in the WRPS response to the 222-S methylene chloride spill, in which the 10.6 ev Photoionoization

detector was used in error, as the basis for the release of the work area. The manufacturer's literature clearly identifies that this instrument does not detect a chemical such as methylene chloride, which has an ionization potential higher than 10.6 ev.

Requirement:

10 CFR 851.21, "Hazard Identification and Assessment"

(a) Contractors must establish procedures to identify existing and potential workplace hazards and assess the risk of associated workers injury and illness. Procedures must include methods to: Assess worker exposure to chemical, physical, biological, or safety workplace hazards through appropriate workplace monitoring;

Discussion:

Despite considerable attention to COPC, air monitoring strategies, and instrument operation, there is an absence of specific methodology for the selection and interpretation of the nine or more different DRI used to monitor for the acute hazard COPC (as listed in EH-06-004). Selection and data interpretation of some DRI such as the use of the iTX ammonia meter for ammonia measurement is self-evident. However, other DRI such as the ppbRAE, the Miran 205B, and the TVA-1000 respond to multiple chemicals at different sensitivities and react to multiple interfering compounds. Such DRI warrant both clear decision logic for selection and instructions of interpretation, relative to other instrument readings. In addition, there is no direction provided for the use of detector tubes with regard to the same. Such reliance on "Professional Judgment," at this significant level of decision making creates the potential for errors, departmental inconsistency, an absence of written documentation, and an inability to audit program performance against standardized procedures.

A-09-ESQ-TANKFARM-001-F04: There is an absence of written direction to incorporate the mandated goal of reducing worker exposure to carcinogens and all chemicals to levels ALARA, below the TLV.

Requirements:

10 CFR 851, 10 CFR 851.21, and 10 CFR 851.23 The 2005 ACGIH TLV booklet states "...carcinogens, worker exposure by all routes should be carefully controlled to levels as low as possible, below the TLV"

10 CFR 851.21(4), "Hazard Identification and Abatement," that the "contractor must analyze designs of new facilities and modifications to existing facilities and equipment for potential workplace hazards" and 10 CFR 851.22, "Hazard Prevention and Abatement," contractors must establish and implement a hazard prevention and abatement to ensure...

DOE Standard 1189-2008, "Integration of Safety into the Design Process" – Section 7.10, "Hazardous Material," similar to radiological hazards, DOE requirements invoke an ALARA concept for the protection of workers from hazardous materials. Design should support the

primary objective of reducing the frequency, severity, and cost of incidents involving hazardous material, as well as the cost of hazardous operations. Prevention practices, such as substitution of less hazardous materials in a project or design of a process to reduce generations of hazardous waste, should be examined prior to consideration of protection strategies. Protection strategies will generally involve confinement strategies, such a gloveboxes, piped systems, and tanks, as well as administrative controls. The approach will typically be driven by the magnitude of the hazard and inventory. Similar to radiological hazards, DOE requirements invoke an ALARA concept for the protection of workers from hazardous materials.

DOE-STD-3009-94, "Preparation Guide for U.S. Department of Energy Non-Reactor Nuclear Facility Documented Safety Analyses," Chapter 8, "Hazardous Material Protection"

8.4 ALARA POLICY AND PROGRAM (DOE-3009-94)

This section summarizes the ALARA policy and program for the facility. Historically, hazardous materials, unlike radioactive materials, have often been evaluated assuming de-minimis level below which little harm is associated with exposures (e.g., OSHA PELs). Where this is the case for given subject matter, ALARA needs to be considered a qualitative concept evaluated against OSHA and IH exposure standards and guidelines.

8.4 ALARA POLICY AND PROGRAM (TF DSA)

The hazardous material protection program ensures that exposures to hazardous materials are below regulatory limits and at a level ALARA. ALARA concepts are employed at the tank farms for hazardous material protection. The goal of ALARA is to reduce the level of hazardous materials and the effects of those materials at the source, and thereby mitigate any effects on workers, the environment, or the public. ALARA also ensures that exposures are kept to the lowest levels and within the limits set by governing authorities (i.e., OSHA PELs, ACGIH TLVs, and DOE directives). Procedures, instructions, and standards ensure exposures are kept to a minimum based on the requirements and provisions of DOE Orders, OSHA regulations, national consensus IH standards, and recommended practices. The IH programs pertaining to hazardous material protection at the Tank Farm Contractor (TFC) facilities utilize elimination/substitution of materials, engineered controls and features, administrative controls, and PPE.

To minimize the use of, and exposure to, hazardous materials, purchase requisitions are reviewed for products that contain or that may result in the production of hazardous chemicals; where possible, less hazardous materials are substituted. In addition, the TFC oversees contractor and subcontractor construction activities at TFC facilities to minimize exposures to hazardous materials through worksite inspections following the requirements of DOE O 440.1A.

5.2 Observations

A-09-ESQ-TANKFARM-001-O01: There is a lack of clear, consolidated information the WRPS IH technical basis is overly complicated and confusing to both workers and outside viewers. There are a number of significant conflicting statements regarding such important elements as PPE and air monitoring requirements. In addition, there are numerous links within key documents that refer the reader to a secondary set of documents, which in turn refer the reader to a tertiary set of documents.

Discussion:

The WRPS IH Technical Basis is overly complicated and confusing to both workers and outside viewers. There are a number of significant conflicting statements regarding such important elements as PPE and air monitoring requirements. In addition, there are numerous links within key documents that refer the reader to a secondary set of documents, which in turn refer the reader to a tertiary set of documents. Another concern is the listing of extensive readings for the implementation of a single IH task of noise dosimetry (TF-OPS-IHT-0015), which states "the following documents may be needed to perform this procedure" then lists 16 major documents, including TLV books, CFR, American National Standards Institute (ANSI) docs, and others.

Assessment Follow-up Items

A-09-ESQ-TANKFARM-001-AFI01: There is a WRPS IH consensus that the tank farms vapor hazards is static and fully characterized, which results in a WRPS IH Departmental mentality that limits vigilant assessment of day-to-day considerations of abnormal events, assessment of new or improved control measures; and interpretation of results. In follow up assessment (Phase II), the following subject areas will be looked at: The nature of the safety culture within WRPS, observations of IH Technicians going through re-qualification or initial qualification, actual sampling (source, personnel, or area), the processing of sample media for laboratory analysis and execution of the Work Instructions/Job Hazard Analysis, field observations of drills for off-normal waste release (and actual should any occur), the monitoring, controls, and associated documentation of abnormal event decision making, and effectiveness of in field sample and data quality assurance process.

6.0 REFERENCES (From DOE Standard IH Practices, DOE-STD-6005-2001 April 2001)

6.1 Government Documents

DOE Directives (Policy, Orders, Handbooks, and Technical Standards)

a. CFR 1910 Part 851 Replacing DOE O 440.1A, Worker Protection Management for DOE Federal and Contractor Employees.

b. DOE O 450.4. Safety Management System Policy.

c. DOE O 450.5. Line Environment, Safety, and Health Oversight.

d. DOE G 440.1-1, Worker Protection Management for DOE Federal and Contractor Employees Guide for Use with DOE O 440.1.

e. DOE G 440.1-2, Construction Safety Management Guide for Use with DOE O 440.1.

f. DOE G 440.1-3, Occupational Exposure Assessment, Implementation Guide for Use with DOE O 440.1.

g. DOE G 440.1-4, Contractor Occupational Medical Program Guide for Use with DOE O 440.1.

h. DOE G 440.1-7, Implementation Guide for Use with DOE N 440.1-7, Interim Chronic Beryllium Disease Prevention Program.

i. DOE Standard 1189-2008, "Integration of Safety into the Design Process."

j. DOE Standard 3009, Preparation Guide for U.S. Department of Energy Non-Reactor Nuclear Facility Documented Safety Analyses

k. GUIDES: DOE G 441.1-2 Occupational ALARA Program Guide

DOE-STD-6005-2001 2 i. DOE O 5480.10A, Contractor IH Program.

- **Other Government Documents**

a. U.S. Department of Labor, OSHA, "Field Inspection Reference Manual."

b. U.S. Department of Labor, OSHA, "Technical Manual."

c. U.S. Department of Labor, OSHA, Title 29 CFR, Part 1910, Occupational Safety and Health Standards, and Part 1926, Safety and Health Regulations for Construction.

d. U.S. Department of Labor, OSHA, Title 29 CFR, Part 1960, Basic Program Elements for Federal Employee Occupational Safety and Health Programs and Related Matters.

6.2 Non-Government Documents

a. ACGIH, "Threshold Limit Values for Chemical Substances and Physical Agents and Biological Exposure Indices" (Latest edition).

b. American Conference of Governmental Industrial Hygienists, "Industrial Ventilation: A Manual of Recommended Practice" (Latest edition).

c. Joseph Damiano and John R. Mulhausen (Editors), "A Strategy for Assessing and Managing Occupational Exposures," 2nd edition. AIHA, Fairfax, VA (1998)

d. Salvatore R. DiNardi, (Editor), "The Occupational Environment. Its Evaluation and Control," AIHA, Fairfax, VA (1997)

e. ANSI, latest version of various standards including, but not limited to:
   1. ANSI Z 88.2, .Respiratory Protection.
   2. ANSI Z 88.6, .Physical Qualifications for Respirator Use.
   3. ANSI Z 117.1, .Safety Requirements for Working in Tanks and Other Confined Spaces.
   4. ANSI Z 136.1, .Safe Use of Lasers.
   5. ANSI Z 358.1, .Emergency Eyewash and Shower Equipment.

f. American Society of Heating, Refrigerating, and Air Conditioning Engineers, "ASHRAE Handbook and Product Directory," volume on Fundamentals.

6.3 Personnel Interviewed

6.3.1 WRPS ESH&Q Safety and Health Manager

6.3.2 WRPS ESH&Q Business Operations Industrial Safety/IH Manager

6.3.3 WRPS ESH&Q Business Operations IH Manager

6.3.4 WRPS SST Retrieval & Closure Safety and IH Manager

6.3.5 WRPS Industrial Hygienists (7 total)

6.3.6 WRPS Industrial Hygiene Technicians (20 total)

6.4 Documents Reviewed

6.4.1 Integrated Environment, Safety, and Health Management System Description for the Tank Operations Contractor, RPP–MP-03

6.4.2 Worker Health and Safety Requirements Implementation Matrix, TFC-ESHQ-S SAF-CD-11

6.4.3 Worker Health and Safety Program, TFC-PLN-47, RPP-27195

6.4.4 Industrial Hygiene Safety Management Program Plan TFC-PLN-55

6.4.5 Tank Operations Contractor Health and Safety Plan TFC-PLN-43, Revision A-12

6.4.6 IH Exposure Assessment Strategy RPP-27195 TFC-PLN-34 R-D-2

6.4.7 Beryllium TFC-PLN 24

6.4.8 ASBESTOS PROGRAM, RPP-MP-625, Revision

6.4.9 Risk Management Plan TFC-PLN-39 Revision C

6.4.10 Emergency Management Program Plan TF-PLN-85

6.4.11 Tank Farm Contractor Training and Qualification Plan TFC-PLN-64

6.4.12 Technical Staff Qualifications Requirements USQ-GCX-2

6.4.13 IH Tech and Qualifications Requirements TFC-BSM-TQ STD-07 RC

6.4.14 Subcontractor Oversight ESH&Q TFC-ESHQ-S_SAF-C-07, Revision B-5

6.4.15 EMPLOYEE JOB TASK ANALYSIS TFC-ESHQ-S_IH-C-17, Revision B-3

6.4.16 IH Deports and Documents (Safety & Health Programs-web page) Dermal Exposure Study & Waste Disturbing Activities Vapor Characterization.

6.2.17 IH Reporting & Records Management TFC-ESHQ-S_IH-C-46

6.2.18 Managing Vapor Control Zones TFC-ESHQ-S_IH-C-48

6.2.19 Chemical Management Process TFC-ESHQ-S_IH-C-47

6.2.20 Industrial Hygiene Alarm Response TFC-ESHQ-S_IH-C-45

6.2.21 TF Chemical Exposure Hazard Analysis (Safety & Health Programs-web page)

6.2.22 Exposure Monitoring, Reporting, and Records Management TFC-ESHQ-IH-STD-03

6.2.23 Industrial Hygiene Response to Vapor Concerns TFC-ESHQ-IH-STD-09

6.2.24 Industrial Hygiene Equipment Management TFC ESQC_H- S PI 11

6.2.25 Industrial Hygiene Response to Employee Contact with Chemical Waste TFC-ESHQ-IH-STD-10

6.2.26 Industrial Hygiene Chemical Vapor Technical Basis RPP-22491, R1

6.2.27 Tank Waste Dermal Exposure Assessment RPP-34147, R O

6.2.28 Concentrations of Chemicals of Potential Concern in Water and Organic Condensates PRR-RPT-24794, R 1

6.2.29 Respirator Issuance and Control ProcessesTFC-ESHQ-S_IH-CD-05.1

6.2.30 Personal Protective Equipment TFC-ESHQ-S_IS-C-02

6.2.31 Blood borne Pathogen Exposure Control Standard TFC-ESHQ-S-24

6.2.32 INDUSTRIAL HYGIENE INSTRUMENT ALARM RESPONSE TFC-ESHQ-S_IH-C-45, Revision A-1

6.2.33 Response to Reported Odors or unexpected Changes to Vapor Conditions, TF Abnormal Operating Procedures:

6.2.34 Evaluation and Procurement of Industrial Hygiene Monitoring Instruments TFC-ESHQ-S_IH-CD-38

6.2.35 3M Breathe Easy Powered Air Purifying Respirator Test and Maintenance TFC-ESHQ-S_IH-D-05.2

6.2.36 MSA OptimAir 6A Powered Air Purifying Respirator Test and Maintenance TFC-ESHQ-S_IH-D-05.3

6.2.37 Using the TVA 1000B Toxic Vapor Analyzer TFC-ESHQ-S_IH-D-25

6.2.38 Tank Vapor Source Monitoring TFC-ESHQ-S_IH-D-27

6.2.39 Permit Required Confined Space TFC-ESHQ-S_IH-C-04, Revision C-2

6.2.40 MIRAN 205B Series SapphIRe Instrument OperationTFC-ESHQ-S_IH-D-32

6.2.41 Noise Surveys, Dosimetry, and Octave Band AnalysisTFC-ESHQ-S_IH-D-34

6.2.42 Hazard CommunicationTFC-ESHQ-S_IH-C-02

6.2.43 COC and Submitting Samples for Laboratory Analysis TFC-ESHQ-S_IH-P-10

6.2.44 Ergonomics TFC-ESHQ-S_IH-STD-03

6.2.45 Cold Stress TFC-ESHQ-IH-STD-01

6.2.46 Heat Stress Control TFC-ESHQ S IH C -07

6.2.47 Laser Safety and Nonionizing Radiation TFC-ESHQ-IH-STD-02

6.2.48 Asbestos Control - Facility Management/General Industry TFC-ESHQ-IH-STD-04

6.2.49 Hearing Conservation Program TFC-ESHQ-IH-STD-06

6.2.50 Lead Control Program TFC-ESHQ-IH-STD-08

6.2.51 Carcinogen Control TFC-ESHQ-IH-STD-11

6.2.52 Industrial Hygiene Monitoring and Control Strategies During Tank Retrieval and Transfers TFC-ESHQ-IH-STD-12

6.2.53 Illumination TFC-ESHQ-IH-STD-13

6.2.54 IHT Flammable Gas Surveillance on Double Shell Tanks TF-OPS-IHT-00

6.2.55 Perform IHT Flammable Gas Surveillance on Single Shell Tanks TF-OPS-IHT-002

6.2.56 Preparation and Field Use of Multi-Gas Monitor Model TMX412 TF-OPS-IHT-003

6.2.57 Preparation and Field Use of iTX Multi-Gas Monitor and iSP Motorized Sampling Pump TF-OPS-IHT-004

6.2.58 Preparation and Field Use of the ppbRAE Volatile Organic Compound Monitor TF-OPS-IHT-005

6.2.59 Preparation and Field Use of Drager Accuro and Accuro 2000 Pump and Colorimetric Indicator TF-OPS-IHT-006

6.2.60 Using DRIs TF-OPS-IHT-007

6.2.61 Using The Sper Scientific Light Meter TF-OPS-IHT-008

6.2.62 IH Pump Preparation and field Use for Personal-Area Air Monitoring TF-OPS-IHT-009

6.2.63 Field Wipe Sampling and Bulk Sampling Methods TF-OPS-IHT-0010

6.2.64 Preparation and Field Use of the AreaRAE Multi-Gas Monitor TF-OPS-IHT-0011

6.2.65 Preparation and Field Use of the QUESTemp 15 and QUESTemp 32 Heat Stress Monitors TF-OPS-IHT-0012

6.2.66 Preparation and Field Use of the Lumex Ra-915+ Mercury Vapor Analyzer TF-OPS-IHT-0014

6.2.67 Preparation and Field Use of the Quest Q300 Noise Dosimeter and 2900 Sound Level Meter TF-OPS-IHT-0015

6.2.68 Preparation and Field Use of the Manning EC-P2 Ammonia Monitor TF-OPS-IHT-0016

6.2.69 Performance Indicators (H&S Web)

6.2.70 IH Exposure Assessment strategy TFC PLN-34, Revision D-2, Section 3.4

6.2.71 WRPS Health and Safety Tool Box Web Page: multiple fact sheets, data sheets, information sheets, analysis and reports.

APPENDIX A – PRINCIPAL DOCUMENT REVIEW AND COMMENTS

Document Name	Document Identifier	Comments
PRIMARY DOCUMENTS		
Integrated Environment, Safety, and Health Management System Description for the Tank Operations Contractor	RPP –MP-03	Baseline ISM
Worker Health and Safety Requirements Implementation Matrix	TFC-ESHQ-S_SAF-CD-11	-Excellent tool.
Worker Health and Safety Program	TFC-PLN -47 RPP-27195	-Does not address New Technology Program -Organizational Roles and Responsibilities element is difficult to access -Medical Surveillance Program is vague
Industrial Hygiene Safety Management Program Plan	TFC-PLN-55	-Calls for a target of 3 IH field Inspections per week -No new technology review process -No element of metrics or corrective action elements
Chemical Hygiene Plan		To be addresses as part of the ATL assessment
Tank Operations Contractor Health and Safety Plan	TFC-PLN-43, REV A-12	-Scope is to be "compliant with 29 CFR 1910.120" -Scope includes (…"facility workers protected from unplanned releases of radioactive and hazardous materials)" -Unsuccessful in accessing WRPS Org Chart via cited web link -Does not address New Technology Program -Document contains cited links and over 200 secondary links contained in those documents - 4.2.1 No discussion of administrative controls -4.6 BBP program is non compliant (see that line item) -6.0 Contamination Control is radiation oriented no direction on chemical decontamination? - Medical surveillance does not address IH interactions with Medical contractor following uncontrolled exposures (EJTA is primary tool for ongoing surveillance).
IH Exposure Assessment Strategy	RPP-27195 TFC-PLN-34 R D-2	Lacks specific methodologies and decision making for use of DRIs, despite general directives provided.
Beryllium	TFC-PLN 24	Previously approved.
ASBESTOS PROGRAM	**RPP-MP-625, REV**	Effective.
Risk Management Plan	**TFC-PLN-39, REV C December 3, 2008**	-No discussion of Engineering control assessments, administrative control efficiency, PPE usage impacts, review of new technologies or future assessment strategies.
Emergency Management Program Plan	TF-PLN-85	Does not address all 29 CFR 1910.120 line items
Staff Qualifications		
Tank Farm Contractor Training and Qualification Plan	TFC-PLN-64	Applicable to all TOC personnel, General in nature
Technical Staff Qualifications Requirements	USQ-GCX-2	IH quals well addressed.
IH Tech Training and Qual Requirements	TFC-BSM-TQ STD-07 R C	-Calls for 2 yr degree + 1 yr experience & Basic in-house IH course, -Does not discuss IHT –Lead Quals -Does not address IH Equipment Custodian Quals
Subcontractor Oversight	**ESH&Q□TFC-ESHQ-S_SAF-C-07, REV B-5□**	**It is unclear as to who will provide the IH support, There are no minimal quals stated for H&S subs**
EMPLOYEE JOB TASK ANALYSIS	**TFC-ESHQ-S_IH-C-17, REV B-3**	**This is the key link in the Medical Surveillance Program within the TOC HASP. Does not address overexposure medical surveillance issues.**
IH Management Elements		
IH Deports and Documents	**Safety & Health**	Excellent resource

- **Dermal Exposure Study** - Waste Disturbing Activities Vapor Characterization.	**Programs-web page**	**- Dermal Exposure Study** - **Dedicated to demonstrating that Silver shield CPC is not warranted for listed TF work.** -Waste Disturbing Activities Vapor Characterization Report
IH Reporting & Records Management	**TFC-ESHQ-S_IH-C-46**	Overall, good document
Managing Vapor Control Zones	**TFC-ESHQ-S_IH-C-48**	Appears to be a very good tool, ties to the TVIS and the CHAD s.
Chemical Management Process	**TFC-ESHQ-S_IH-C-47**	- Not Hazwaste related
Industrial Hygiene Alarm Response	**TFC-ESHQ-S_IH-C-45**	IHT or IH: "Evaluate the cause and determine the need for additional actions" – no decision tree or directives for stop work, etc.
TF Chemical Exposure Hazard Analysis	**Safety & Health Programs-web page**	-Overall, very good risk characterization summaries in similar format for multiple tanks and operations. Use of comparable operations is useful. *T Farm breather filter change out: No need for a vapor control zone and monitoring is limited to ammonia and VOCs: However, WRPS has 1) Provided a list of chemicals in condensate (Hg, nitrosamines, etc) & 2) Stated that filters trap semi vols ?
Exposure Monitoring, Reporting, and Records Management	**TFC-ESHQ-IH-STD-03**	Exceeds OSHA retention of exposure records (75 yrs)
Industrial Hygiene Response to Vapor Concerns	**TFC-ESHQ-IH-STD-09**	Very good overall approach, but cited instruments and techniques are limited in scope?
Industrial Hygiene Equipment Management	**TFC ESQC _H- S PI 11**	Good Directive.
Industrial Hygiene Response to Employee Contact with Chemical Waste	**TFC-ESHQ-IH-STD-10**	"All hazard and facility/area information will be provided to the Occupational Medicine Contractor and the shift manager". What, where, How and when?
Technical Documents		
Industrial Hygiene Chemical Vapor Technical Basis	**RPP-22491, R1**	-Excellent effort, subject to some change per WRPS and HC interactions
Tank Waste Dermal Exposure Assessment	**RPP-34147 Revision 0**	- Excellent Element of Tech Basis- Advance level work -liquid has a pH of 13, yet document only calls for safety glasses, as does the PPE plan below. -Conclusion is unclear with respect to CPC requirements.
Concentrations of Chemicals of Potential Concern in Water and Organic Condensates	**PRR-RPT-24794, R 1**	-Excellent Study and characterization
Respirator Issuance and Control Processes	**TFC-ESHQ-S_IH-CD-05.1**	Effective.
Personal Protective Equipment	**TFC-ESHQ-S_IS-C-02**	-lacks discussion of decision logic for CPC selection &, service life -Indicates that corrosive materials are cause for protection, but the text only addresses impact protection, not splash protection?
Blood borne Pathogen Exposure Control Standard	**TFC-ESHQ-S-24**	- does not define type of Gloves -Refers only to "masks" as respiratory protective equipment
INDUSTRIAL HYGIENE INSTRUMENT ALARM RESPONSE	**TFC-ESHQ-S_IH-C-45, REV A-1**	IHT or IH: "Evaluate the cause and determine the need for additional actions".
Response to Reported Odors or unexpected Changes to Vapor Conditions	**TF Abnormal Operating Procedures:**	IH to collect grab sample for GC/MS Real time monitoring is VOC and ammonia
Evaluation and Procurement of Industrial Hygiene Monitoring Instruments	**TFC-ESHQ-S_IH-CD-38**	- No discussion of new technology reviews, but very good element of such a process.
3M Breathe Easy Powered Air	**TFC-ESHQ-S_IH-D-**	Effective.

Purifying Respirator Test and Maintenance	**05.2**	
MSA OptimAir 6A Powered Air Purifying Respirator Test and Maintenance	**TFC-ESHQ-S_IH-D-05.3**	Effective.
Using the TVA 1000B Toxic Vapor Analyzer	**TFC-ESHQ-S_IH-D-25**	-No discussion of COPC that are detected by PID/FID or sensitivity/ correction factors
Tank Vapor Source Monitoring	**TFC-ESHQ-S_IH-D-27**	Very general, no techniques described.
Permit Required Confined Space	**TFC-ESHQ-S_IH-C-04, REV C-2**	N o comments.
MIRAN 205B Series SapphIRe Instrument Operation	**TFC-ESHQ-S_IH-D-32**	Very good. Note format varies with different instruments.
Noise Surveys, Dosimetry, and Octave Band Analysis	**TFC-ESHQ-S_IH-D-34**	Excellent.
Hazard Communication	**TFC-ESHQ-S_IH-C-02**	Unclear as to what hazard index is used for labeling; HMIS?
Chain of Custody and Submitting Samples for Laboratory Analysis	**TFC-ESHQ-S_IH-P-10**	Good.
Ergonomics	**TFC-ESHQ-S_IH-STD-03**	Sound. Cites TLV Booklet for primary direction. See Also: **TANK FARMS GENERAL INDUSTRIAL SAFETY HAZARDS ANALYSIS** **See Also Ergonomics H&S web page**
Cold Stress	**TFC-ESHQ-IH-STD-01**	Effective.
Heat Stress Control	**TFC-ESHQ S IH C -07**	Good, comprehensive.
Laser Safety and Nonionizing Radiation	**TFC-ESHQ-IH-STD-02**	No comment.
Asbestos Control - Facility Management/General Industry	**TFC-ESHQ-IH-STD-04**	29 CFR 1910.1001(l), *Medical Surveillance* requires a specific pre-placement examination before an employee can be designated as an asbestos worker but TFC-ESHQ-IH-STD-04, *Asbestos Control – Facility Management/General Industry* does not document how these pre-placement requirements are transmitted to the occupational medical office or verified to have been met before placement.
Asbestos Control - Construction Industry	**TFC-ESHQ-IH-STD-05**	No comments
Hearing Conservation Program	**TFC-ESHQ-IH-STD-06**	29 CFR 1910.95(g)(10) defines a standard threshold shift as a change in hearing threshold relative to the baseline audiogram of an average of 10 dB or more at 2000, 3000, and 4000 Hz or greater in either ear. Contrary to this TFC-ESHQ-IH-STD-06, *Hearing Conservation Program*, Revision A, Dated October 28, 2004 list the determining standard threshold shift that is an average of 25 dB or greater at 2000, 3000, and 4000 Hz in either or both ears for written notification to an employee.
Lead Control Program	**TFC-ESHQ-IH-STD-08**	29 CFR 1910.1025(e)(4), *Mechanical Ventilation* requires effectiveness check of at least every three months and within five days of any change that may result in a change in employee exposure to lead. Contrary to this TFC-ESHQ-IH-STD-08, *Lead Control Program* (section 3.3.3, *Mechanical Ventilation*) omits the effectiveness check requirement.
Carcinogen Control	**TFC-ESHQ-IH-STD-11**	29 CFR 1910.1003 (c)(2)(ii) requires for the listed carcinogens within a regulated area, authorized employees upon exit wash the hands, forearms, face, and neck upon each exit. Contrary to this TFC-ESHQ-IH-STD-11, *Carcinogen Control* (Step 10) only identifies the action of washing but is non-specific on body section or upon each exit of the regulated area. 29 CFR 1910.1003(e)(1)(ii)requires a specific sign at entrances to regulated areas containing operations covered by paragraph (c)(5). Contrary to this TFC-ESHQ-IH-STD-11, *Carcinogen Control* (Step 8) does provide the specific signage as the referenced section requires.
Industrial Hygiene Monitoring and Control Strategies During Tank Retrieval and Transfers	**TFC-ESHQ-IH-STD-12**	Requires updating: This February, 2005 document discusses pending, future policies not yet addressed.
Illumination	**TFC-ESHQ-IH-STD-13**	-consistent with 29 CFR 1910.120 M (illumination)
IHT Flammable Gas Surveillance on	**TF-OPS-IHT-001**	-Good record keeping tools, no mention of calibration or correction factors if warranted.

Double Shell Tanks		
Perform IHT Flammable Gas Surveillance on Single Shell Tanks	**TF-OPS-IHT-002**	-Good record keeping tools, no mention of calibration or correction factors if warranted.
Preparation and Field Use of Multi-Gas Monitor Model TMX412	**TF-OPS-IHT-003**	Excellent. Note: No discussion of LEL corrections.
Preparation and Field Use of iTX Multi-Gas Monitor and iSP Motorized Sampling Pump	**TF-OPS-IHT-004**	Effective.
Preparation and Field Use of the ppbRAE Volatile Organic Compound Monitor	**TF-OPS-IHT-005**	Very Good (=/- 10% of bump gas acceptable) No discussion of PID lamp or range, sensitivities or applications.
Preparation and Field Use of Drager Accuro and Accuro 2000 Pump and Colorimetric Indicator	**TF-OPS-IHT-006**	Excellent. Do not understand pump application in text?
Using Direct Reading Instruments	**TF-OPS-IHT-007**	-Overall, good document. - No discussion of COPC that are detected by PID/FID or sensitivity/ correction factors
Using The Sper Scientific Light Meter	**TF-OPS-IHT-008**	Good.
Industrial Hygiene Pump Preparation and field Use for Personal-Area Air Monitoring	**TF-OPS-IHT-009**	Effective.
Field Wipe Sampling and Bulk Sampling Methods	**TF-OPS-IHT-0010**	Effective.
Preparation and Field Use of the AreaRAE Multi-Gas Monitor	**TF-OPS-IHT-0011**	Effective. Good detail.
Preparation and Field Use of the QUESTemp 15 and QUESTemp 32 Heat Stress Monitors	**TF-OPS-IHT-0012**	Effective.
Preparation and Field Use of the Lumex Ra-915+ Mercury Vapor Analyzer	**TF-OPS-IHT-0014**	Effective. Mode of technology absent.
Preparation and Field Use of the Quest Q300 Noise Dosimeter and 2900 Sound Level Meter	**TF-OPS-IHT-0015**	This procedure states the "the following documents may be need to perform this procedure" then lists 16 major documents, including TLV books, CFRs, ANSI docs, etc . This is an unrealistic burden to place on IHTs!
Preparation and Field Use of the Manning EC-P2 Ammonia Monitor	**TF-OPS-IHT-0016**	Unclear as to how an IHT's calibration (if necessary) is accounted for on sticker and records?
Metrics		-
Performance Indicators	**H&S Web**	Good metrics, but limited to subject matter - Lab turn around data - Tracking of # of samples
Industrial hygiene Exposure Assessment Strategy	**TFC-PLN-34, REV D-2 Section 3.4**	-Discusses SEGs -number of exposures below 10% of OELs -Number of exposures greater then 50% of the OEL -Recommendations for SEG revisions or EAS improvements
Tertiary Documents		

Procedural Items	LCO 3.2.3 SST 241-B-203/B-204 Passive Ventilation Sys **Tank Farm DSA Requirements Implementation Matrix** **AC 5.8 Emergency Preparedness** **AC 5.10 Flammable Gas Control** **LCOS: ventilation, Flammable Gas Concentrations**	No Comments
MSDS	**Safety & Health Programs-web page**	Appears to be a sound system of electronic MSDS access.
TANK VAPOR INFORMATION SHEETs	**Safety & Health Programs-web page**	- Dermal Protection outlines those tanks that do not call for silver shield. This does not clarify what CPC, if any, is warranted, nor does it address corrosive element. - Monitoring for COPC's (Chemicals of Potential Concern) Good element to the Exposure Assessment Strategy, as applied to A tank farm only. However, narrative states: " Direct reading instruments (DRI) are used to monitor for COPC that may cause immediate acute effects, such as irritation." However, the list of 8 chemicals that are monitored by DRIs does not include some other COPCs that appear to offer acute effects such as furan? - Health Effects of Chemicals of Potential Concern – good Hazard Communication tool for hazwaste consitutents. - Odor Thresholds – good reference.

U.S. Department of Energy
[redacted]
P.O. Box 450, MSIN H6-60
Richland, Washington 99352

JAN 12 2009

08-ESQ-335

Mr. Mike Armstead
Procurement Contracts Manager
Washington River Protection Solutions LLC
2440 Stevens Center Place
Richland, Washington 99354

Dear Mr. Armstead:

CONTRACT NO. DE-AC27-08RV14800 – NOTIFICATION OF INDUSTRIAL HYGIENE TECHNICAL BASIS ASSESSMENT

The U.S. Department of Energy, Office of River Protection (ORP) will conduct an assessment of the Washington River Protection Solutions LLC industrial hygiene technical basis during the month of January 2009. The lead for this assessment is Richard L. Urie and supported by Mario R. Moreno. An assessment review plan is attached.

If you have any questions, please contact me, or your staff may contact Richard L. Urie, Office of Environmental Safety and Quality, (509) 376-2229.

Sincerely,

Joseph C. Poniatowski
Contracting Officer

ESQ:RLU

Attachment

cc w/attach:
F. Beranek, WRPS
M. W. Jones, WRPS
D. T. Tuckness, WRPS
WRPS Correspondence

Attachment
08-ESQ-335

JAN 1 2 2009

U.S. Department of Energy

Office of River Protection

Industrial Hygiene Technical Basis Assessment

of

Washington River Protection Solutions

Industrial Hygiene Technical Basis Assessment
A-09-ESQ-TANKFARM -001

PURPOSE:

U.S. Department of Energy (DOE), Office of River Protection (ORP) will conduct an assessment of the contractor's Industrial Hygiene (IH) technical basis programmatic documents, staff qualifications, and internal means of management, which provide guidance of work implementation at the Washington River Protection Solutions LLC (WRPS) operated facilities. This assessment fulfills a scheduled assessment that is identified in the ORP Fiscal Year 2009 Integrated Assessment Schedule. The assessment will conform to the requirements of ORP procedure ESQ-IP-1, RO.

INDUSTRIAL HYGIENE SCOPE:

The scope of this assessment shall be limited to the following basic tasks:

I. A review and assessment of all WRPS programmatic IH related documents, as defined in this section;

II. An evaluation of the IH personnel qualifications by way of a review of staff qualifications cards and through small group interviews; and

III. A review of WRPS IH management records, data bases and reports that reflect the current level of effort associated with IH treads analysis, program metrics, program planning, self-assessments, and associated corrective actions.

The assessment plan was developed using DOE G 440.1-3, titled Occupational Exposure Assessment. DOE G 440.1-3 provided the Criteria, Review, and Approach Documents (CRAD)/Lines of Inquiry which are listed below. The assessor modified the CRADs/Lines of Inquiry to be more specific as it relates to WRPS. The assessor will use a combination of conventional review techniques during the course of the assessment, including document reviews, personnel interviews, and field observations.

For the purpose of this assessment and to assure a common understanding, an IH program is considered to consist of the following technical and programmatic sub-elements:

1. Hazard communication & related training;

2. Chemical exposure monitoring, modeling, and related health risk assessments;
   a. Inclusive of air & surface sources, instrumentation, and techniques in consideration of eye/dermal exposures, injection, inhalation and ingestion

3. Toxicology and chemical hazard assessments;
   a. Inclusive of medical surveillance, and consideration of health effects such as cancer, birth defects, chemical sensitivity, target organ effects; explosive,& reactive chemical hazards

4. Implementation and testing of control strategies for IH Hazards;
   a. Inclusive of demonstrated consideration of engineering controls, including ventilation and shielding; administrative controls including product or process substitution; ongoing reviews of emerging technologies

5. Ergonomics and illumination;

6. Identification, assessment, and control of physical work environment factors;
   a. Inclusive of heat and cold, high and low pressure environments, and shift work

7. Selection and use of Personal Protective Equipment, with an emphasis on eye, face, skin, and respiratory protection;

8. Energy and electromagnetic radiation;
   a. Inclusive of the Identification, assessment and control of noise, non-ionizing radiation, and laser safety

9. Biological hazards assessment within the work place;
   a. Inclusive of pathogenic agents, poisonous organisms, and allergens

10. Functional IH Management elements, including:
    a. Staff Training and Qualifications programs
    b. Trends analysis, Metrics, tracking, self-assessments and reporting
    c. Lessons learned, corrective actions and improvements
    d. Employee interactions and informational exchange
    e. Planning, budgeting, and continuing education

11. Integration of the afore mentioned IH elements into applied operations including:
    a. Hazardous Waste Operations
    b. Confined Space Entry
    c. Laboratory Chemical Hygiene Plans
    d. Chemical spill response activities
    e. Beryllium, lead, carcinogen and asbestos management programs

CRITERIA

The CRAD is intended to provide guidance for evaluation of the occupational exposure assessment and health hazards management component of the DOE and WRPS IH program. The goal of the criteria is to answer the fundamental question:

"Is WRPS properly planning, and effectively managing an industrial hygiene, occupational exposure assessment, and hazards management program that meets the intent of 10 CFR 851?"

Enclosure 1 provides detailed questions that may be utilized as specific CRADs. Enclosure 2 provides a summary of the methodology to be employed, to assist WRPS in facilitation of the assessment process.

TEAM MEMBERS:

The assessment team will be lead by Richard L. Urie, with the support of Mario R. Moreno.

REQUIREMENTS:

- 10 Code of Federal Regulations (CFR) Part 851, Worker Safety and Health Program Rule;
- 10 CFR Part 850 Chronic Beryllium Disease Prevention Program; Final Rule (not applicable to this assessment);
- DOE G 440.1-3, Occupational Exposure Assessment;
- DOE O 226.1a, Contractor Assurance;
- OSHA Regulations Standards - 29 CFR 1910 and 1960;
  - 29 CFR 1910, with emphasis on –
    - General Duty Clause
    - 29 CFR 1910.120 Hazardous Waste Operations
    - 29 CFR 1910.132, Personal Protective Equipment
    - 29 CFR 1910.134, Respiratory Protection
    - 29 CFR 191 0. 94, 95 & 97 Ventilation, noise, & Non ionizing Radiation
    - 29 CFR 146 Confined Space Entry
    - 29 CFR 1910.141 Sanitation
- DOE Environmental Safety and Health (ES&H) Reporting Order 231.1; and Computerized Accident/Incident Reporting System;
- DOE O 231.1A, ES&H Reporting;
- Work Authorization System Order; DOE O 412.1A;
- ES&H Goals Policy; DOE P 450.7
- Safety Management Functions, Responsibilities, and Authorities Policy; DOE P 411.1
- Quality Assurance Order; DOE O 414.1C;

- DOE Notice 450.14, Safe Handling, Transfer, and Receipt of Biological Etiologic Agents at Department of Energy Facilities;
- DOE P 456.1, Secretarial Policy Statement on Nanoscale Safety;
- DOE Order 5480.19, Conduct of Operations Requirements for DOE Facilities;
- DOE Order 5480.20A, Personnel Selection, Qualification, and Training. Requirements for DOE Nuclear Facilities; and
- DOE O 225.1A, Accident Investigations.

Richard L. Urie, Team Lead, January 7, 2009

ENCLOSURE 1

PERFORMANCE OBJECTIVES

Performance Objective 1: Washington River Protection Solutions LLC (WRPS) Program Documentation

Criteria to be evaluated:

1. Has the WRPS Safety and Health Organization documented the Industrial Hygiene (IH); occupational exposure and health hazards management programs in a manner which is comprehensive and compliant with 10 Code of Federal Regulations (CFR) 1910.851, 10 CFR 850 and 851, other U.S. Department of Energy (DOE) Directives and recognized consensus standards (e.g., the American Industrial Hygiene Association [AIHA], National Institute of Occupational Safety and Health [NIOSH]). Has the WRPS IH program defined the technical areas and the frequency at which each technical area is assessed? For each technical area, are there procedures for performing the health hazard assessment which defines the purpose, scope, responsibilities, assessment criteria, and references? Does the assessment documentation include: occupational exposure assessment and sampling methodology, laboratory analysis method used, report findings, causal analyses, corrective actions, review, and distribution of report?

2. Has WRPS documented a clear definition of responsibility for decisions by senior management, provision for escalation of worker health matters involving significant occupational exposures and hazards to DOE in an appropriate time frame?

3. Does WRPS maintain a documented sitewide planning and budgeting process which includes priorities for managing occupational exposures and health hazards?

4. Does the WRPS Safety and Health Organization have documented implementation plans for the occupational exposure and health hazards management program?

5. Has WRPS established clear lines of authority and responsibility for managing the occupational exposure and health hazards program? Are responsibilities of each staff position defined for worker health activities? Internal and external interfaces within and between the DOE Office of River Protection, the WRPS, and with outside groups (i.e., State, local, and regional health officials and other government agencies), being clearly and formally defined for each position?

6. Has the WRPS Safety and Health Organization developed and maintained a written occupational exposure and health hazards management program in conformance to 10 CFR 850, and 10 CFR 851.

PERFORMANCE OBJECTIVES

Performance Objective 2: Operating Contractor's Program Implementation of Administrative Elements

Criteria to be evaluated:

1. Has WRPS fully integrated its IH; occupational exposure and health hazards management program into the work planning and execution process?

2. Does the contractor's Safety and Health organization prepare an annual assessment schedule showing the occupational exposure and health hazards assessments planned?

3. Does the contractor's Safety and Health organization submit to the DOE Office of River Protection (ORP), a list of the dates on which occupational exposure and health hazards technical assessments were preformed?

4. Do the WRPS audit management system tools include; procedures for performing occupational exposure and health hazards assessments, worksheets, periodic standard report formats, reference material, training material, which are provided to staff performing assessments?

5. Does the contractor's Safety and Health Organization has a system in place to control, maintain occupational exposures, health hazards management procedures and hazard control guides current? Does the system include a mechanism for updating and distributing procedures, and internal guides on a specified schedule?

6. Does WRPS Safety and Health Organization perform analyses on significant occupational exposures and health hazards assessment findings? Has the contractor identified staff that is responsible for correcting the contractor's health hazard deficiencies? Are the actions necessary to resolve the deficiency addressed in corrective action plans?

7. Does the contactor's Safety and Health organization perform trend analysis of findings from the occupational exposures and health hazards programs? Does the contractor communicate leading and lagging performance trends to ORP? Does the contractor have a technically defensible corrective action management program that will prevent reoccurrence of IH; occupational exposure and health hazards management program deficiencies?

8. Does the contractor's Safety and Health organization have a tracking system that includes all occupational exposures and health hazards finding? Does the tracking system identify corrective actions, schedules, and progress made on corrective actions? Is other information such as results of root cause analyses also included in the tracking system? Is there a method to flag or highlight significant events or actions is included in the tracking system?

9. Does the contractor's Safety and Health organization ensure that management processes, activity hazards identification and analysis, and functional technical appraisals in specific occupational exposure and health hazards assessment subject areas are included in the contractor's program and are integrated into the Contractor's safety management, work planning and execution system?

   Note: This might include: activity hazards analysis, exposure assessments, hazard controls and, the specific technical program elements (e.g., noise and hearing conservation, ventilation, respiratory protection, asbestos, non-ionizing radiation (radio-frequency radiation, lasers, magnetic fields), ergonomics, carcinogens, DOE Beryllium program, Occupational Safety and Health Administration (OSHA) substance specific health standards i.e., Benzene, Asbestos, etc; occupant emergency and critical event planning, sanitation, vibration, extreme temperature, biohazards, confined spaces, laboratory hygiene program, Indoor Air Quality, office environments, recordkeeping, employee training and certification, and labeling and posting).

10. Does the contractor's line management organization track the effectiveness of its implementation of the occupational exposure and health hazards program by reviewing the findings of its internal assessments of the program? Does the contractor's line management identify problems which are promptly corrected?

11. Does WRPS have an effective corrective action program and organizational structure for resolving related action items? Contractor performance with respect to completing corrective actions is documented, reported, and tracked?

12. Does the WRPS Safety and Health organization have adequate staff with a level of professional training, experience commensurate with the requirements for implementation of the IH; occupational exposures and health hazards management program?

13. Does the WRPS Safety and Health organization ensure that internal self-assessments of occupational exposure and health hazards are conducted?

14. WRPS Safety and Health Organization ensure compliance with mandatory standards for assessing and managing occupational exposures and health hazards.

15. Is the WRPS occupational exposure and health hazards assessment staff adequately trained in occupational exposure assessment, such as through an AIHA, or other academic based program? Does the training address familiarization with all mandatory standards, AIHA or NIOSH criteria, guidance documents, and other references that are pertinent to the technical area; use of procedures for conducting the assessment and, instructions on preparing reports and related documentation?

16. Does the WRPS Safety and Health Organization prepare performance indicator reports, utilize performance indicators involving occupational exposures, health hazards data, and other operations information? This includes; medical monitoring, epidemiological surveillances, Computerized Accident/Incident Reporting System, OSHA 300 log data,

Occurrence Reporting and Processing System reportable occurrences, for performing trending and analysis to provide early identification of potential exposure and health hazards and/or deteriorating/improving worker health conditions.

17. WRPS provides management periodic summaries of performance on the assessment and management of occupational exposures and health hazards.

18. Has WRPS developed program management goals related to occupational exposures and health hazard? Are these goals measurable and include short-term (annual) and long-term goals (several year period) to assess and manage occupational exposures and health hazards? Is the progress towards goals monitored regularly and goals adjusted as necessary? Do the line managers have performance elements in their personnel appraisal relating to successful attainment of program management goals?

ENCLOSURE 2

METHODOLOGY

The Industrial Hygiene (IH) technical basis assessment shall consist of the following elements:

1. An in-brief tentatively planned for the week of January 12, 2009, involving the Washington River Protection Solutions LLC (WRPS) health and Safety Manager and IH Manger; and the U.S. Department of Energy (DOE) assessment team. The purpose of the in-brief is to clarify the scope and the applicable Criteria Review and Approach Documents; and to discuss scheduling and logistical requirements of the assessment.

2. The DOE Office of River Protection (ORP) assessment team shall review all WRPS IH related programs, plans, procedures and related documents currently on record. This assessment will not necessarily include a detailed review of data bases, log books, and records, other than to verify the presence of such documents as warranted. The review process will entail a comparative analysis of WRPS programmatic documents to Federal requirements (please see requirements section below) and include a review such umbrellas programs as:

   - 851 requirements Matrix TFC-ESHQ-S_SAF-CD-11;
   - Worker Health and Safety Program, RPP-27195; and
   - Tank Operations Contractor Health and Safety Plan.

To include secondary and tertiary documents such as

- IH Chemical Vapor Technical Basis, RPP-22491, Revision 1;
- IH Exposure Assessment Strategy RPP-27195 TFC-PLN-34 R D-2; and
- IHT-007 Using Direct Reading Instruments.

3. The DOE ORP assessment team will meet with the appropriate WRPS management representatives to gain a clear understanding of WRPS IH program goals, objectives, metrics/ trends analysis, and internal assessment efforts and results. In addition, the team will review the communication process between the WRPS IH management team and the DOE ORP representatives with respect to on-going programmatic updates and special event notifications. The meeting(s) will also serve as an opportunity to clarify any questions regarding WRPS written programs and guidance documents.

4. The DOE ORP assessment team will coordinate with WRPS a series of interviews with equal grades of all WRPS IH personnel for the purpose of evaluating their level of knowledge and

training; and to gain first hand insight into their respective job duties and interactions relative to the programmatic directives.

5. The DOE ORP assessment team will conduct a Generator Assistance Program analysis based on the results of the assessment per a 10 CFR 851 itemized template.

6. Other elements as deemed necessary.

7. The DOE ORP assessment team will conduct a de-brief to discuss any draft observations or findings with WRPS managers of interest.

Task# ORP-ESQ-2008-0344

E-STARS[R] Report
Task Detail Report
01/12/2009 1013

TASK INFORMATION

Task#	ORP-ESQ-2008-0344		
Subject	CONCUR:08-ESQ-335; NOTIFICATION OF INDUSTRIAL HYGIENE TECHNICAL BASIS ASSESSMENT		
Parent Task#		**Status**	CLOSED 01/12/2009
Reference	08-ESQ-335	**Due**	
Originator	Gano, Becky	**Priority**	High
Originator Phone	(509) 376-6004	**Category**	None
Origination Date	12/30/2008 0835	**Generic1**	
Remote Task#		**Generic2**	
Deliverable	None	**Generic3**	
Class	Long Term	**View Permissions**	Normal

Instructions

Correspondence is being routed for concurrence via hard copy. Once you receive the correspondence, please approve or disapprove electronically via E-STARS and route to next person on the routing/concurrence list.

BCC:
ESQ OFF FILE
ESQ RDG FILE
J.C.PONIATOWSKI, AMD
W.J.TAYLOR, ESQ
K.A.HOAR, VCD
R.L.URIE, VCD

RECORD NOTE:

ROUTING LISTS

1	Route List	Inactive

- Urie, Richard L - Review - Cancelled - 01/12/2009 1013
  Instructions:
- Hoar, Kenneth A - Review - Concur - 01/12/2009 1003
  Instructions:
- Taylor, William J - Review - Concur - 01/12/2009 0734
  Instructions:
- Poniatowski, Joseph C - Approve - Approved - 01/12/2009 0936
  Instructions:

ATTACHMENTS

Attachments

1. 08-ESQ-335 att IH Technical Basis Assessment.doc
2. 08-ESQ-335 WRPS LTR Notification of Industrial Hygiene Technical Basis Assessment.doc

COLLABORATION

COMMENTS

Poster Gano, Becky - 01/12/2009 1001

CLOSED

RECEIVED
JAN 12 2009

Task# ORP-ESQ-2008-0344

E-STARS[R] Report
Task Detail Report
12/30/2008 0839

TASK INFORMATION

Task#	ORP-ESQ-2008-0344		
Subject	CONCUR:08-ESQ-335; NOTIFICATION OF INDUSTRIAL HYGIENE TECHNICAL BASIS ASSESSMENT		
Parent Task#		**Status**	Open
Reference	08-ESQ-335	**Due**	
Originator	Gano, Becky	**Priority**	High
Originator Phone	(509) 376-6004	**Category**	None
Origination Date	12/30/2008 0835	**Generic1**	
Remote Task#		**Generic2**	
Deliverable	None	**Generic3**	
Class	Long Term	**View Permissions**	Normal

Instructions

Correspondence is being routed for concurrence via hard copy. Once you receive the correspondence, please approve or disapprove electronically via E-STARS and route to next person on the routing/concurrence list.

BCC:
ESQ OFF FILE
ESQ RDG FILE
J.C.PONIATOWSKI, AMD
W.J.TAYLOR, ESQ
K.A.HOAR, VCD
R.L.URIE, VCD

RECORD NOTE:

ROUTING LISTS

1	Route List	Active

- Urie, Richard L - Review - Awaiting Response - Due Date 1/8/09 RL
  Instructions:
- Hoar, Kenneth A - Review - Awaiting Response - Due Date 1/8/09
  Instructions:
- Taylor, William J - Review - Awaiting Response - Due Date 1/9/09
  Instructions:
- Poniatowski, Joseph C - Approve - Awaiting Response - Due Date 1/12/09
  Instructions:

ATTACHMENTS

Attachments

1. 08-ESQ-335 att IH Technical Basis Assessment.doc
2. 08-ESQ-335 WRPS LTR Notification of Industrial Hygiene Technical Basis Assessment.doc

COLLABORATION

COMMENTS

No Comments

TASK DUE DATE HISTORY

No Due Date History

SUB TASK HISTORY

No Subtasks

-- end of report --

APPENDIX C - INTERGRATED SAFETY MANAGEMENT SYSTEM EVALUATION FORM

ISMS Evaluation
ESQ-OA-IP-01-R1
Issued 01/21/09
Tank Operations Contractor
Industrial Hygiene Technical Basis Assessment

For each of the following identify whether the report:

S = Identified a strength

W = Identified a weakness

N = Found the topic with no special strength or weakness

N/A = Did not address the topic

Topical Area	Evaluation	Comment (optional)
Core Function 1: Define the Scope of Work	W	Field work OK, weak at program level
Core Function 2: Analysis of Hazards	N	
Core Function 3: Develop and Implement Hazard Controls	N	
Core Function 4: Perform Work Within Controls	N	
Core Function 5: Provide Feedback and Continuous Improvement	W	
Principle 1: Line Management Responsibility for Safety	W	
Principle 2: Clear Roles and Responsibilities	W	Including weak interfaces with Ops and Eng.
Principle 3: Competence Commensurate with Responsibilities	N	
Principle 4: Balanced Priorities	W	
Principle 5: Identification of Safety Standards and Requirements	W	
Principle 6: Hazard Controls Tailored to Work Performed	W	
Principle 7: Operations Authorization	N	
Supplemental Principle 1: Highly-Reliable Operational Performance	W	
Supplemental Principle 2: Individual Attitude and Responsibility	S	Current workforce usually performs work correctly in absence of program Procedures.
Supplemental Principle 3: Performance Assurance	W	
Supplemental Principle 4: Organizational Performance Improvement	W	

APPENDIX D – ASSESSMENT TEAM BIOGRAPHIES

Richard L. Urie, Team Lead

Mr. Urie is certified in Industrial Hygiene (IH) by the American Board of Industrial Hygiene, # 3681; and is co-certified in safety, but the Board of Safety Professionals, #12248. He holds a masters degree in Environmental Science from the University of Colorado - Denver and a Bachelor of Science Degree in Community Health, from the University of Northern Colorado. He has practiced IH and safety since 1980, with project experience at over 20 major Comprehensive Environmental Response Compensation and Liability Act Sites and 4 U.S. Department of Energy (DOE) facilities within the western United States. He initiated and managed an IH consulting firm from 1988 to 1999, employing 5 Certified Industrial Hygienists and has provided assessments, training, and consultation to over 400 institutions and businesses in the United States, Germany, Kuwait, Iraq, Indonesia, Taiwan, and Australia. He has served as the team lead for the Department of Homeland Security - Biological Emergency Support Team as a member of the HAZMAT Team at the Los Alamos National Laboratory (LANL) and worked directly with the Centers for Disease Control Infectious Disease Branch and the National Institute for Occupational Safety and Health in the response to a suspected bioterrorism event and in the establishment of response planning for perceived targets of opportunity in New York City, New York. He supported research in airborne agricultural bioterrorism through LANL and Texas A&M West. Examples of past IH assessments performed by Rich Urie include:

- PNL - Hanford Pre Tiger Team IH programmatic assessment & HAZWOPER training.
- LANL Readiness Assessment of the TA-54 Decontamination, Volume Reduction System & training.
- Rocky Flats Plant post Tiger Team IH HAZWOPER programmatic assessment and generation of the original HAZWOPER Health and Safety Program.
- U.S. Army Support Operations Iraq/Kuwait: IH risk assessments & training.
- Freeport Indonesia annual IH programmatic Assessments and staff training program.
- Adolph Coors Company IH Emergency Preparedness Assessment and Training.
- Homestake Gold Mine IH Programmatic Assessment.
- National Aeronautics and Space Administration (NASA) White Sands Test Facility IH field Assessments.
- AMOCO Production emergency response assessor, expert witness, and trainer.

He is the author of three publications on the subject of Personal Protective Equipment and associated risk assessments. One such publication was in collaboration with the American Conference of Governmental Industrial Hygienists. He has served as an expert witness in Federal court regarding related IH subject matter, and provided IH presentations to the U.S. Attorney General's Office, Department of Homeland Security, NASA, National Mining Engineers Conference, and DOE, among others. Mr. Urie is currently the IH program representative for the DOE Office of River Protection.

Mario Moreno, Team Member

Mr. Moreno holds a bachelor's degree from California State Polytechnic University in Chemical Engineering. He has provided engineering related services to the U.S. Department of Energy (DOE) for 20 years, including an assignment as the program manager for the Single-Shell Tank stabilization efforts. Mario, formerly with the tank farm nuclear safety/authorization basis; is currently working towards Industrial Hygiene (IH) certification under the DOE Office of River Protection IH mentorship program and has completed a number of IH technical courses. He has participated in numerous health and safety related assessments at the Hanford Site.

Message

From: Bowman, Tamara
Sent: Tuesday, June 30, 2009 8:49 AM
To: ^WRPS Corrective Action Group
Cc: Caldwell, Joyce A; Jones, Mark W
Subject: WRPS-PER-2009-0900 PIE/CIM

Please extend the above referenced PER as follows:

RM Mark Jones

Due 07/04/2009

Extend 07/27/2009

We have been directed by ORP to have a corrective action plan for this observation. Additional time is needed to complete.

Tami Bowman

"Safety - Our Way of Life"
W- 509-372-0031
C- 509-438-5268
Fax- 509-373-2715

Save

Problem Evaluation Request (PER)

WRPS-PER-2009-0924
In Process/Work

PER No	Date of Discovery	Time of Discovery (24:00)	Project
WRPS-PER-2009-0924	05/08/2009	08:00	Engineering

Location

All Tank Farms

How Was Problem Discovered

MOP

Description of Concern or Problem

During the performance of an Integrated Safety Management System (ISMS) Phase II Management Observation, the following observation was made:

Consider a change to TFC-ENG-FACSUP-D-01.1, System Health Report Preparation, to require that Problem Evaluation Requests (PERs) be written for the following information generated/captured in these reports: design issues, long range recommendations, other significant findings, issues, vulnerabilities.

Requirement Not Satisfied	Source Document Number

Equipment Identification Number	System Identification

Immediate actions Taken or Planned

None.

Recommended Corrective actions

Consider a procedure change. To help, also consider requiring that these PERs be assigned to the appropriate facility manager for resolution since many may require funding.

Originator Contact

No

Originators Name	Originators ID	Originators Phone	Date Initiated
Milliken, Nancy J	H0051651	(509) 376-7846	05/08/2009

SHIFT OPERATIONS REVIEW

Title

System Health Report Preparation, to require that Problem Evaluation Requests (PERs) be written

How Discovered	Agency
self-ID prior to event	

Reportability	SSC Operability	Operability Review	Comp Measures Req
Non-Reportable	N/A	N/A	

Describe actions Taken or Recommended

No additional Base Ops Shift Office actions required at this time.

SO Reviewer Name	SO Reviewer ID	SO Reviewer Phone	SO Review Date
Johnson, Brian A	H0003531	(509) 373-2696	05/08/2009

SCREENING

PER Significance Level			
PIE/CIM			
Independent Assessment Review	**Occurrence Report Number**	**Externally Identified**	
No		No	
Assigned Responsible Manager	**Facilities Rep / SSO**	**Safety Management Rep**	
Nelson, Eric A			

Program		Safety Management Program	
• N/A		• Safety Culture (ISMS)	
PER Screening Comments			
cc: Gary Faust (Nancy Brown 05/11/09)			
Causal Code			
MGT/Comm/Train	**Human Performance**	**GEMS**	**Equip/Eng/Other**
Failed Barrier	**ORPS Code**	**Functional Area**	**Work Process**
	Not Applicable	Engineering	• Assessments • Procedures: Preparation/Review
ISMS	**Consequence Code**		
Provide feedback and continuous improvement	• ^N/A^ - No consequence code applies		
PER Screening Chair	**PER Screening Chair ID**	**PER Screening Chair Phone**	**PER Screening Date**
Brown, Nancy L	H0088797	(509) 373-0992	05/11/2009
PAAA REVIEW			
PAAA Screening	**PAAA Codes**	**Function Codes**	
Not subject to PAAA			
NTS Report Number	**NTS Report Date**		
Repetitive / Recurrent	**Programmatic**	**Intentional Violation / Misrepresentation**	
No	No	No	
PAAA Screening Comments			
PAAA Reviewer Name	**PAAA Review Date**		
Anderson, Craig E	05/11/2009		
PAAA Approver Name	**PAAA Approve Date**		
Anderson, Craig E	05/12/2009		
SENIOR MANAGEMENT REVIEW/CONCURRENCE			
TF Operations Morning Leadership Call			
N/A			
Instructions for Responsible Manager			
Evaluate suggestion, enter comments and required actions on PIE/CIM tab of the PER. Disposition in accordance with TFC-ESHQ-Q_C-C-01, Problem Evaluation Request.			
Senior Management	**Sr Mgmt ID**	**Sr Mgmt Phone**	**Sr Mgmt Review Date**
Brown, Nancy L	H0088797	(509) 373-0992	05/12/2009
CAUSE ANALYSIS			
Description of Occurrence			
Extent of Condition			
Safety Significance			
Generic Implications			

Remedial Corrective Action
Causal Analysis, Apparent Cause and/or Root Cause Analysis
PIE/CIM
Evaluation of PIE/CIM Initiative
ATTACHMENTS
Link to PER
WRPS-PER-2009-0924.msg

AUDIT HISTORY

Change Date	Auditor	Comments
05/12/2009 09:26	Brown, Nancy L	Responsible Manager Task Launched by Brown, Nancy L

-- End of Report --
07/09/2009 04:54 PM

Task# WRPS-PER-2009-0924

E-STARS[R] Report
Task Detail Report
07/09/2009 1655

TASK INFORMATION			
Task#	WRPS-PER-2009-0924		
Subject	PIE; System Health Report Preparation, to require that Problem Evaluation Requests (PERs) be written		
Parent Task#		**Status**	Open
Reference		**Due**	08/07/2009
Originator	^PER Coordinator	**Priority**	Medium
Originator Phone		**Category**	PER
Origination Date	05/08/2009 0819	**Generic1**	None
Remote Task#		**Generic2**	None
Deliverable	PER Review	**Generic3**	None
Class	None	**View Permissions**	Global
Instructions	*No Instructions*		

ROUTING LISTS

1	Responsible Manager	Active
	Evaluate suggestion, enter comments and required actions on PIE/CIM tab of the PER. Disposition in accordance with TFC-ESHQ-Q_C-C-01, Problem Evaluation Request.	
	• Nelson, Eric A - Assign - Delegated - 05/21/2009 0756 *Instructions:* ↳ *Routing List:* Route List - Active *Instructions:* • Faust, Gary L - Assign - Awaiting Response	
2	Review Initial PER	Inactive
	Review New PER	
	• ^SO(Johnson, Brian A) - Review - Concur - 05/08/2009 1117 *Instructions:*	
	• ^PER Screening(Brown, Nancy L) - Review - Concur - 05/11/2009 1359 *Instructions:*	
	• ^Mgr Review - Review - Cancelled - 05/12/2009 0926 *Instructions:*	

ATTACHMENTS

Attachments	1. Link to PER 2. WRPS-PER-2009-0924.msg

COMMENTS

Poster	^PER Coordinator (Glaman, Linda R) - 07/02/2009 1529
	extend to 7-30-09 per attached email request. LBG 7-2-09
	Please extend the due date for the subject ESTARS task to 7/30/09. Additional time is required to determine a path forward on the identified issue. Gary Faust for E Nelson 7-2-09

TASK DUE DATE HISTORY

Task# WRPS-PER-2009-0924			
Modified	07/02/2009 1528 - ^PER Coordinator (Glaman, Linda R)	**New Due Date**	08/07/2009 1630
Modified	05/12/2009 0926 - ^PER Coordinator	**New Due Date**	07/07/2009 1630
Modified	05/12/2009 0926 - ^PER Coordinator	**New Due Date**	07/07/2009 1630
Modified	05/08/2009 0819 - ^PER Coordinator	**New Due Date**	05/10/2009 1630
SUB TASK HISTORY			
No Subtasks			

-- end of report --

Message

From: Faust, Gary L

Sent: Thursday, July 02, 2009 10:28 AM

To: ^WRPS Corrective Action Group

Cc: Littlejohn, Susan M; Nelson, Eric A

Subject: WRPS-PER-2009-0924

Please extend the due date for the subject ESTARS task to 7/30/09. Additional time is required to determine a path forward on the identified issue.

Gary Faust
Central Design Authority & Standards
373-0337

Save

Problem Evaluation Request (PER)

WRPS-PER-2009-0946
Closed 05/18/2009 10:45

PER No	Date of Discovery	Time of Discovery (24:00)	Project
WRPS-PER-2009-0946	04/02/2009	00:00	Base Ops

Location

AY Farm

How Was Problem Discovered

Routine Work

Description of Concern or Problem

TREND ONLY - NO ACTION REQUIRED. This PER is written for automated PAAA/WSH trending purposes only. April 2009 First Aid Case. Assign to Craig Anderson, PAAA/WSH.

200E/241-AY – BASE OPS: Maintenance/Work Execution, West Maintenance, West Day Operation – FIRST AID – En route to AX Farm, employee smelled odor in AY Farm. Employee treated at AMH and returned to work with no restrictions.

Requirement Not Satisfied	Source Document Number
None	
Equipment Identification Number	**System Identification**

Immediate actions Taken or Planned

Employee sent to AMH.

Recommended Corrective actions

None.

Originator Contact

No

Originators Name	Originators ID	Originators Phone	Date Initiated
Anderson, Craig E	H0001274	(509) 372-3940	05/12/2009

SHIFT OPERATIONS REVIEW

Title

employee smelled odor in AY Farm

How Discovered	Agency
self-ID result of event	

Reportability	SSC Operability	Operability Review	Comp Measures Req
Non-Reportable	N/A	N/A	

Describe actions Taken or Recommended

no additional actions taken or recommended by Base Ops SO

SO Reviewer Name	SO Reviewer ID	SO Reviewer Phone	SO Review Date
Strasser, David W	H0075556	(509) 373-2689	05/12/2009

SCREENING

PER Significance Level	
Trend Only	

Independent Assessment Review	Occurrence Report Number	Externally Identified	
No		No	
Assigned Responsible Manager	**Facilities Rep / SSO**	**Safety Management Rep**	
Anderson, Craig E			

Program	Safety Management Program
• N/A	• Industrial Safety

PER Screening Comments			
Trending only (Nancy Brown 05/14/09)			
Causal Code			
MGT/Comm/Train	**Human Performance**	**GEMS**	**Equip/Eng/Other**
Failed Barrier	**ORPS Code**	**Functional Area**	**Work Process**
	Not Applicable	Occupational Safety and Health	• Vapor/Odor Reporting
ISMS	**Consequence Code**		
Identify and analyze hazards	• Vapor - Tank Related - Employee exposure to a vapor that is tank origin related		
PER Screening Chair	**PER Screening Chair ID**	**PER Screening Chair Phone**	**PER Screening Date**
Brown, Nancy L	H0088797	(509) 373-0992	05/14/2009
PAAA REVIEW			
PAAA Screening	**PAAA Codes**	**Function Codes**	
Not subject to PAAA			
NTS Report Number	**NTS Report Date**		
Repetitive / Recurrent	**Programmatic**	**Intentional Violation / Misrepresentation**	
No	No	No	
PAAA Screening Comments			
PAAA Reviewer Name	**PAAA Review Date**		
Anderson, Craig E	05/13/2009		
PAAA Approver Name	**PAAA Approve Date**		
Anderson, Craig E	05/13/2009		
SENIOR MANAGEMENT REVIEW/CONCURRENCE			
TF Operations Morning Leadership Call			
N/A			
Instructions for Responsible Manager			
Senior Management	**Sr Mgmt ID**	**Sr Mgmt Phone**	**Sr Mgmt Review Date**
Brown, Nancy L	H0088797	(509) 373-0992	05/18/2009
ATTACHMENTS			
Link to PER			

-- End of Report --
05/18/2009 10:45 AM

Task# WRPS-PER-2009-0946			
E-STARS[R] Report Task Detail Report 05/18/2009 1045			
TASK INFORMATION			
Task#	WRPS-PER-2009-0946		
Subject	TREND; employee smelled odor in AY Farm		
Parent Task#		Status	CLOSED 05/18/2009
Reference		Due	05/14/2009
Originator	^PER Coordinator	Priority	Medium
Originator Phone		Category	PER
Origination Date	05/12/2009 1028	Generic1	None
Remote Task#		Generic2	None
Deliverable	PER Review	Generic3	None
Class	None	View Permissions	Global
Instructions	*No Instructions*		
ROUTING LISTS			
1	Review Initial PER		Inactive
	Review New PER		
	• ^SO(Strasser, David W) - Review - Concur - 05/12/2009 1324 *Instructions:*		
	• ^PER Screening(Brown, Nancy L) - Review - Concur - 05/14/2009 1357 *Instructions:*		
	• ^Mgr Review(Brown, Nancy L) - Review - Concur - 05/18/2009 0933 *Instructions:*		
ATTACHMENTS			
Attachments	1. Link to PER		
COMMENTS			
No Comments			
TASK DUE DATE HISTORY			
Modified	05/12/2009 1028 - ^PER Coordinator	New Due Date	05/14/2009 1630
SUB TASK HISTORY			
No Subtasks			
-- end of report --			

Save

Problem Evaluation Request (PER)

WRPS-PER-2009-0959
In Process/Work

PER No	Date of Discovery	Time of Discovery (24:00)	Project
WRPS-PER-2009-0959	05/13/2009	10:30	ATS/222-S

Location

222S

How Was Problem Discovered

Assessment

Description of Concern or Problem

During a MOP assessment I discovered that the tuning solution used for the semi-volatile organics analysis on thermal desorption tubes was expired. The tuning solution had been used even though it had expired in December 2007.

Requirement Not Satisfied	Source Document Number
Standards and reagents, used to generate data reported to clients, are not used beyond expiration dates.	ATS-MP-1015

Equipment Identification Number	System Identification
N/A	

Immediate actions Taken or Planned

Analyst will not use the expired standard. Also, Laboratory Manager notified.

Recommended Corrective actions

Recommend assigning as a PER with resolution to Cary Seidel.

Originator Contact

I would like to help define the problem

Originators Name	Originators ID	Originators Phone	Date Initiated
Clark, Glen A	H0103701	(509) 373-1790	05/13/2009

SHIFT OPERATIONS REVIEW

Title

Tuning Solution for Semi-Volatile Organics Analysis Expired

How Discovered	Agency
self-ID prior to event	

Reportability	SSC Operability	Operability Review	Comp Measures Req
Non-Reportable	N/A	N/A	

Describe actions Taken or Recommended

No additional actions recommended.

SO Reviewer Name	SO Reviewer ID	SO Reviewer Phone	SO Review Date
Brey, Steve L	H0062556	(509) 373-2960	05/19/2009

SCREENING

PER Significance Level	
PER with Resolution	

Independent Assessment Review	Occurrence Report Number	Externally Identified	
No		No	

Assigned Responsible Manager	Facilities Rep / SSO	Safety Management Rep	
Seidel, Cary M		Shugars, David L	

Program	Safety Management Program
• N/A	• Quality Assurance

PER Screening Comments

Formal Apparent Cause Analysis: Issue represents continuted use of an expired standard for over a year.
L Glaman 5-20-09

Causal Code			
A3B1C03	Human Performance LTA Skill Based Error Incorrect performance due to mental lapse		
A5B2C03	Communications LTA Written Communications Content LTA Data/computations wrong/incomplete		
MGT/Comm/Train	**Human Performance**	**GEMS**	**Equip/Eng/Other**
Failed Barrier	**ORPS Code**	**Functional Area**	**Work Process**
	Not Applicable	Analytical Chemistry	• Analytical Standards Preparation
ISMS	**Consequence Code**		
Perform work within the controls	• Calibration Standard - Calibration standard failed, expired, or otherwise LTA • Qualification Requirements Not Met - Person performed activity without meeting qualification requirements • Reagent Quality - Reagent Quality or Purity Issue, Chemical/Gas/apparatus		
PER Screening Chair	**PER Screening Chair ID**	**PER Screening Chair Phone**	**PER Screening Date**
Glaman, Linda R	H0060893	(509) 376-1776	05/20/2009

PAAA REVIEW

PAAA Screening	**PAAA Codes**	**Function Codes**	
PAAA, Non-NTS Reportable	• 10 CFR 830.122 (e)(1)	• M&TE (control and calibration) • Sample Control	
NTS Report Number	**NTS Report Date**		
Repetitive / Recurrent	**Programmatic**	**Intentional Violation / Misrepresentation**	
No	No	No	
PAAA Screening Comments			
PAAA Reviewer Name	**PAAA Review Date**		
Anderson, Craig E	05/20/2009		
PAAA Approver Name	**PAAA Approve Date**		
Anderson, Craig E	05/21/2009		

CAUSE ANALYSIS

Description of Occurrence

During performance of MOP-FY09-ISMS-014 it was discovered that the primary standard used to prepare a secondary diluted standard was expired. This diluted standard solution was used to perform the semi-volatile organics analysis on thermal desorption tubes. ATS-MP-1015 states that standards and reagents used to generate data reported to clients are not used beyond expiration dates.

Extent of Condition

The individual knew the appropriate steps related to the process for creating the diluted solution but inattention caused a failure to check the expiration date before continuing with use. Considering the number of company communications regarding self-checking and requirements to adhere to the requirements of all procedures, additional communication beyond the individual in the case does not appear to be warranted.

Safety Significance

There was no actual or potential effect to personnel, equipment or the environment. The tuning standard cannot fail in such a way as to generate false data because calibration standards would have failed and stopped analysis.

Generic Implications

Remedial Corrective Action

The importance of checking the expiration dates on the standards prior to use was emphasized with the Scientific Technician.
Completed by the Analytical Process Development manager on 5/13/09

The expired standard was disposed of and replaced with an unexpired standard.
Completed by the Scientific Technician on 5/13/09

Reviewed impact to equipment and data and determined that data and equipment were not affected.
Completed by the Analytical Process Development manager and the Scientific Technician on 5/14/09

WRPS-PER-2009-1235 was initiated to address the issue with regard to the inconsistent entry of chemicals into the CITS database.
Completed by Tina Spadoni on 6/24/09

Causal Analysis, Apparent Cause and/or Root Cause Analysis

WHY Analysis:
A Standard used to generate data reported to a client was used beyond the expiration date.

The diluted standard solution used to perform semi-volatile organic analysis on thermal desorption tubes was determined to be expired.

Assessor discovered that the primary standard used to prepare the secondary diluted standard was expired.

The Scientific Technician forgot to check the standards expiration date prior to use.

Summary:
Inattention caused the Scientific Technician to forget to check the expiration date on the standard prior to using it to create a secondary diluted standard. One on one discussion with the Scientific Technician reinforced the importance of checking expiration dates prior to use.

In addition, an Expired Chemicals report dated 4/28/09 from the Chemical Inventory Tracking System (CITS) was used to identify and initiate disposal of expired chemicals in 4QR and 4TUV. This report did not list the standard in question and so it was not identified for disposal. A PER was initiated to address the issue with regard to the inconsistent entry of chemicals into the CITS database. A worker assessment has also been scheduled for FY-2010 to review the Chemical Management Program and identify any opportunities for improvement.

CORRECTIVE ACTIONS

Actionee	Action Due Date	E-STARS Number
Jewett, James R	01/29/2010	WRPS-PER-2009-0959.1

Action

Perform an assessment of the Chemical Management Program to determine if opportunities for improvement exist.

Corrective Action Attachments

- Link to PER
- MOP-FY09-ISMS-014 - Implementation of 222-S QA Plan.pdf
- WRPS-PER-2009-0959 - Originator Concurrence.msg

ATTACHMENTS

Link to PER

MOP-FY09-ISMS-014 - Implementation of 222-S QA Plan.pdf

WRPS-PER-2009-0959 - Originator Concurrence.msg

AUDIT HISTORY

Change Date	Auditor	Comments
05/21/2009 10:54	Brown, Nancy L	Responsible Manager Task Launched by Brown, Nancy L

07/06/2009 15:35	Alexander, Sandy K	Change to Cause Analysis screen/Corrective Action plan.
07/06/2009 15:37	Alexander, Sandy K	Change to Cause Analysis screen/Corrective Action plan.
07/07/2009 10:19	Alexander, Sandy K	'Remedial Corrective Action' was changed.
08/04/2009 13:32	Glaman, Linda R	Corrective actions Launched by Glaman, Linda R

-- End of Report --
08/04/2009 02:59 PM

Task# WRPS-PER-2009-0959

E-STARS[R] Report
Task Detail Report
08/04/2009 1500

TASK INFORMATION			
Task#	WRPS-PER-2009-0959		
Subject	RES; Tuning Solution for Semi-Volatile Organics Analysis Expired		
Parent Task#		**Status**	Open
Reference		**Due**	02/12/2010
Originator	^PER Coordinator	**Priority**	Medium
Originator Phone		**Category**	PER
Origination Date	05/13/2009 1209	**Generic1**	None
Remote Task#		**Generic2**	None
Deliverable	PER Review	**Generic3**	None
Class	None	**View Permissions**	Global
Instructions	*No Instructions*		

ROUTING LISTS

1	Corrective actions Routing Lis	Active
	To launch Corrective actions.	
	• ^PER CAs - Assign - Awaiting Response - Due Date - 02/08/2010 0000 *Instructions:*	
	• Shugars, David L - Review - Awaiting Response - Due Date - 02/12/2010 0000 *Instructions:*	
2	Responsible Manager	Inactive
	Review the PER Screening Tab for requested data. Complete the task in E-STARS in accordance with TFC-ESHQ-Q_C-C-01, and TFC-ESHQ-Q_ADM-C-12 Apparent Cause Analysis & Corrective Action Planning.	
	• Seidel, Cary M - Assign - Completed with comments - 06/25/2009 1223 *Instructions:*	
	• Seidel, Cary M - Assign - Completed with comments - 06/25/2009 1226 *Instructions:* Did you contact the originator about the PER? Document your contact in the response window.	
	• Seidel, Cary M - Assign - Completed with comments - 07/06/2009 1545 *Instructions:* This PER must remain open until the planned assessment is performed in 2010. Also, the action to track performance of the assessment should be an ESTARS item associated with this PER.	
	• Seidel, Cary M - Assign - Completed with comments - 07/07/2009 1004 *Instructions:* Cary, please talk with Glen Clark on this	
	• Shugars, David L - Review - Concur - 07/07/2009 1318 *Instructions:* Safety Management Representative Review	
	• ^Independent Assessment Review(Brown, Robert L) - Assign - Completed with comments - 07/30/2009 1335 *Instructions:*	
3	Review Initial PER	Inactive
	Review New PER	

Task# WRPS-PER-2009-0959

	• ^SO(Brey, Steve L) - Review - Concur - 05/19/2009 0849 *Instructions:*
	• ^PER Screening(Glaman, Linda R) - Review - Concur - 05/20/2009 1311 *Instructions:*
	• ^Mgr Review - Review - Cancelled - 05/21/2009 1054 *Instructions:*

ATTACHMENTS

Attachments	1. Link to PER 2. MOP-FY09-ISMS-014 - Implementation of 222-S QA Plan.pdf 3. WRPS-PER-2009-0959 - Originator Concurrence.msg

COMMENTS

Poster	Seidel, Cary M - 06/25/2009 1223
	Completed
	The Apparent Cause Analysis & Corrective Action Planning has been completed. A QA accessment of the chemical management system has been requested.
Poster	Seidel, Cary M - 06/25/2009 1226
	Completed
	Apparent Cause Analysis & Corrective Action Planning has been completed. A QA accessment of the chemical management system has been scheduled. The originator played a major role in the cause analysis and corrective action planning.
Poster	Seidel, Cary M (Alexander, Sandy K) - 07/06/2009 1545
	Completed
	The action to perform an assessment has been added to the corrective action plan on the PER. PER will not be closed until the assessment has been completed. Please launch one corrective action.
Poster	Seidel, Cary M (Alexander, Sandy K) - 07/07/2009 1004
	Completed
	The action to perform an assessment has been added to the corrective action plan on the PER. PER will not be closed until the assessment has been completed. Please launch one corrective action.
Poster	^Independent Assessment Review (Brown, Robert L) - 07/30/2009 1335
	Completed
	Discussed with Dave Shugers. Concur with closure.

TASK DUE DATE HISTORY

Modified	08/04/2009 1332 - ^PER Coordinator	**New Due Date**	02/12/2010 0000
Modified	05/21/2009 1054 - ^PER Coordinator	**New Due Date**	07/01/2009 1630
Modified	05/21/2009 1054 - ^PER Coordinator	**New Due Date**	06/27/2009 1630
Modified	05/13/2009 1209 - ^PER Coordinator	**New Due Date**	05/15/2009 1630

SUB TASK HISTORY

Subtask#	WRPS-PER-2009-0959.1
Subject	WRPS-PER-2009-0959; RES; Perform an assessment of the Chemical Management Program to determine if opportunities for improvement exist.

Task# WRPS-PER-2009-0959					
Originator	^PER CAs				
	Routing List	Corrective Action			
		Assignee	Jewett, James R	**Response**	
		Assignee	Seidel, Cary M	**Response**	

-- end of report --

WRPS ISMS Phase II
Management Observation Program
Assessment Report

Assessment Number:	MOP-FY09-ISMS-014	Title/Activity:	Implementation of 222-S Laboratory QA Plan

Criterion#	N/A	Criterion:	N/A

Approach: ☒ **Document Review** **X Interview** **X Activity Observation**

Assessor(s)/Team Member(s):	Glen Clark		
Assessment Dates:	April 23 – May 14, 2009		
Program/ Project:	222-S Laboratory		
Documents Reviewed:	RPP-MP-003, ISMS Description for TOC, Revision 6		
Interviews Conducted:	Wade Warrant, Cary Seidel, Keith Fuller, Jerry Kunkel, Jann Frye, Amber Biggs, Steven Davis		
Activities Observed:	Sample internal Chain-of-Custody		
Summary/Discussion of Results:	ATS-MP-1032, *222-S Laboratory QA Plan*, incorporates the flow down of the TFC-PLN-02, *Quality Assurance Program Description,* requirements as applied to an analytical laboratory. All assigned personnel have completed the required reading of the current revision of ATS-MP-1032. The assessor evaluated the implementation of ATS-MP-1032 in the areas of personnel qualification and training, internal Chain-of-Custody, chemical standards, calibration of analytical balances, control charts, QA program assessments, and test planning. Completed Qualification Cards are being maintained in the training organization, while only OJT training documentation is maintained at 222-S Laboratory. The Qualification Card (222-S Process Development Chemist/Scientist) for James Duncan was reviewed and found to be complete. OmniLIMS and hard copy Login/Logout sheets are being used to document internal Chain-of-Custody. The calibration, internal standards, and tuning solution standards used for organics TDU analysis were reviewed and found to be within expiration dates except for the tuning solution used for the analysis of semi-volatiles on TDUs. The assessor generated a PER, referenced below, to document the issue of the expired tuning solution. The calibration stickers for the two analytical balances in 222-SA were reviewed and found to be complete and the balance calibrations current and within expiration. Control charts were last updated about December 2008. An independent assessment of the 222-S Laboratory QA program was not completed in FY2008 because of transition activities to WRPS, however, an independent assessment has been scheduled for august of this fiscal year. Test plans/test procedures are issued through the document control system as either internal memorandums or as engineering documents. Also, WRPS-PER-2009-0746, was reviewed, which had been written recently by the Analytical Process Development Team Lead, to address the use of some TDU sample tubes that had been used more than the procedurally (IH-LT-549-150) allotted twenty times. Implementation of the corrective actions in the documentation of the PER should preclude this from occurring again.		
Noteworthy Practices/ Strengths:			
Opportunities for Improvement:			
Criterion Satisfied:	X Yes ☐ No	**If No, Note Why:**	All reviewed criteria satisfied except for the use of an expired tuning solution.
PER(s) Issued:	X Yes No	**PER Number(s):**	WRPS-PER-2009-0959

WRPS ISMS Phase II
Management Observation Program
Assessment Report

Assessment Number:	MOP-FY09-ISMS-014	Title/Activity:	Implementation of 222-S Laboratory QA Plan

Remedial Actions:	Laboratory personnel to discontinue using the expired tuning solution and the Laboratory Manager notified of the situation.
Conclusions:	The assessor found that all reviewed areas were compliant with ATS-MP-1032 and were being implemented satisfactorily, except for the use of the expired tuning solution.
Recommendations:	To facilitate the generation of control charts, the assessor recommends that 222-S Process Development Chemists/Scientists use NorthWest Analytical (NWA) software in OmniLIMS to generate control charts instead of excel spreadsheets.

Review and Approval:	*This report has been reviewed and approved by the SMP Owner/Line Manager.*	
Name	**Signature**	**Date**
Glen A. Clark	Glen A Clark	5/14/09

(Revised: (3/26/09)

Message

From: Clark, Glen A
Sent: Thursday, June 25, 2009 10:01 AM
To: Alexander, Sandy K
Cc: Seidel, Cary M; Kunkel, Jerry M
Subject: RE: WRPS-PER-2009-0959 - Please Review Causal Analysis Tab

I concur

From: Alexander, Sandy K
Sent: Thursday, June 25, 2009 9:49 AM
To: Seidel, Cary M; Kunkel, Jerry M; Clark, Glen A
Subject: WRPS-PER-2009-0959 - Please Review Causal Analysis Tab

Link To – WRPS-PER-2009-0959

Please review the information provided in the Causal Analysis Tab and attachments, let me know if you concur with information as is.

The PER concerning inconsistent entry of information into CITS was initiated by Tina Spadoni and I thought it would fit in with this resolution – let me know what you think.

If any changes are needed, please let me know.

Thank You,
Sandy Alexander
373-0064

Task# WRPS-PER-2009-0959.1

E-STARS[R] Report
Task Detail Report
08/06/2009 1038

TASK INFORMATION			
Task#	WRPS-PER-2009-0959.1		
Subject	WRPS-PER-2009-0959; RES; Perform an assessment of the Chemical Management Program to determine if opportunities for improvement exist.		
Parent Task#	WRPS-PER-2009-0959	**Status**	Open
Reference	WRPS-PER-2009-0959	**Due**	02/04/2010
Originator	^PER CAs	**Priority**	Medium
Originator Phone		**Category**	PER
Origination Date	08/04/2009 1332	**Generic1**	None
Remote Task#		**Generic2**	None
Deliverable	PER Review	**Generic3**	None
Class	None	**View Permissions**	Global
Instructions	*No Instructions*		

ROUTING LISTS		
1	Corrective Action	Active
	Perform an assessment of the Chemical Management Program to determine if opportunities for improvement exist. RESPONSIBLE MANAGER: When this corrective action is complete, enter a closure statement in E-STARS and close the E-STARS subtask. Refer to the Problem Evaluation Request procedure TFC-ESHQ-Q-C-C-01, Section 4.4 for closure documentation requirements	
	• Jewett, James R - Assign - Awaiting Response - Due Date - 01/29/2010 0000 *Instructions:*	
	• Seidel, Cary M - Review - Awaiting Response - Due Date - 02/02/2010 0000 *Instructions:*	

ATTACHMENTS	
Attachments	1. Link to PER 2. MOP-FY09-ISMS-014 - Implementation of 222-S QA Plan.pdf 3. WRPS-PER-2009-0959 - Originator Concurrence.msg

COMMENTS

No Comments

TASK DUE DATE HISTORY			
Modified	08/04/2009 1332 - ^PER CAs	**New Due Date**	02/04/2010 0000
Modified	08/04/2009 1332 - ^PER CAs	**New Due Date**	02/12/2010 0000

SUB TASK HISTORY

No Subtasks

-- end of report --

Save

Problem Evaluation Request (PER)

WRPS-PER-2008-0009
In Process/Work

PER No	Date of Discovery	Time of Discovery (24:00)	Project
WRPS-PER-2008-0009	10/02/2008	13:00	RadCon Programs

Location

OTHER

How Was Problem Discovered

General Observation

Description of Concern or Problem

While preparing for an ORP assessment of sealed radioactive source accountability and controls, a potential weakness was discovered with procedure TFC-ESHQ-RP_MON-C-24, REV E-2, "Sealed Radioactive Source Accountability and Control." Source custodians/delegates are required to attend training every two years, and "the Project radiological control director/manager must designate source custodians and delegates by completing TFC Designation of Source Custodian (A-6003-939)," (Section 4.1, Step 3). Because the procedure does not require updating/resubmitting form A-6003-939 on a periodic basis, it is possible for someone to remain designated as a source custodian/delegate after lapsing on their required retraining. The Radioactive Source Control Company Technical Authority (RSC-CTA) should evaluate this problem for possible improvement.

Requirement Not Satisfied	Source Document Number
	TFC-ESHQ-RP_MON-C-24, Sealed Radioactive Source Accountability and Control

Equipment Identification Number	System Identification
N/A	

Immediate actions Taken or Planned

Discussed with Jim Rolph and documented in this PER.

Recommended Corrective actions

Recommend screening this as a PIE/CIM to Jim Rolph (Radiological Contols).

Originator Contact

I would like to review the the corrective actions at closure to ensure they were effective

Originators Name	Originators ID	Originators Phone	Date Initiated
Hanni, Jon	H2391068	(509) 373-4017	10/02/2008

SHIFT OPERATIONS REVIEW

Title

Weakness was discovered with procedure TFC-ESHQ-RP_MON-C-24, REV E-2, "Sealed Radioactive Source Accountability and Contr

How Discovered	Agency
self-ID prior to event	

Reportability	SSC Operability	Operability Review	Comp Measures Req
Non-Reportable	N/A	N/A	

Describe actions Taken or Recommended

No additional actions taken or recommended by BO SO.

SO Reviewer Name	SO Reviewer ID	SO Reviewer Phone	SO Review Date
Andrews, Jeffrey E	H0078933	(509) 373-2689	10/02/2008

SCREENING

PER Significance Level	
PIE/CIM	

Independent Assessment Review	Occurrence Report Number	Externally Identified	
No		No	

Assigned Responsible	Facilities Rep / SSO	Safety Management Rep	

Manager			
Rolph, Jim T			
Program		**Safety Management Program**	
• N/A		• Radiological Control	
PER Screening Comments			
None			
Causal Code			
MGT/Comm/Train	**Human Performance**	**GEMS**	**Equip/Eng/Other**
Failed Barrier	**ORPS Code**	**Functional Area**	**Work Process**
	Not Applicable	Radiation Protection	• Radiological Source Control
ISMS	**Consequence Code**		
Perform work within the controls	• Source Control - Program - Identified weakness or oversight in the Source Control program		
PER Screening Chair	**PER Screening Chair ID**	**PER Screening Chair Phone**	**PER Screening Date**
Brown, Nancy L	H0088797	(509) 373-0992	10/06/2008
PAAA REVIEW			
PAAA Screening	**PAAA Codes**	**Function Codes**	
PAAA, Non-NTS Reportable	• 10 CFR 830.122 (d)(1)	• Procedure Quality	
NTS Report Number	**NTS Report Date**		
Repetitive / Recurrent	**Programmatic**	**Intentional Violation / Misrepresentation**	
No	No	No	
PAAA Screening Comments			
PAAA Reviewer Name	**PAAA Review Date**		
Anderson, Craig E	10/06/2008		
PAAA Approver Name	**PAAA Approve Date**		
Anderson, Craig E	10/07/2008		
CAUSE ANALYSIS			
Description of Occurrence			
Extent of Condition			
Safety Significance			
Generic Implications			
Remedial Corrective Action			
Causal Analysis, Apparent Cause and/or Root Cause Analysis			
CORRECTIVE ACTIONS			
Actionee	**Action Due Date**	**E-STARS Number**	

Hanni, Jon	07/15/2009	WRPS-PER-2008-0009.1

Action

Change procedure (TFC-ESHQ-RP_MON-C-24) as indicated in the "Evaluation of PIE/CIM Initiative" field above.

Corrective Action Attachments

- A-6003-939_REV2.docx
- ADCA for TFC-ESHQ-RP_MON-C-24,RevF.pdf
- Extension Request WRPS-PER-2008-0009_ 0024_ 0029.msg
- Form Design Request for A-6003-939.pdf
- Link to PER
- Re_ Extension Request for _WRPS-PER-2008-0009_1_ PERs associated with A-08-ESQ-TANKFARM-010.msg
- TFC-ESHQ-RP_MON-C-24,_Sealed_Radioactive_Source_Accountability_and_Control.doc

PIE/CIM

Evaluation of PIE/CIM Initiative

A meeting was held on December 5,2008 between the company technical authority and facility points of contact for sealed radioactive source control to discuss this PER and other recent PERs associated with the sealed radioactive source program. After reviewing the issue identified in this PER, and noting that a non-compliance has already occurred (WRPS-PER-2008-0016), it was determined that the simplest solution is to change the procedure so that the Project Radiological Control Manager (PRCM) only has to designate the primary source custodian for each source in writing.

The requirement to designate source custodians and delegates is self-imposed, i.e. it was proceduralized but does not flow down from regulatory requirements. The training requirements for source custodians/delegates are Rad Worker I or II and Course 351526 "Source Custodian Training." Each radioactive sealed source is assigned to a source custodian. Beyond identifying the custodian for each source, the self-imposed requirement to designate workers as custodians or delegates does not serve any additional purpose. Therefore, the procedure will be changed to indicate that the PRCM will designate the primary custodian for each source in writing annually, or whenever primary custodianship changes. All other qualified personnel will be considered source custodian delegates by default upon completing the necessary training (Rad Worker I or II and Course 351526).

ATTACHMENTS

Extension Request WRPS-PER-2008-0009_ 0024_ 0029.msg

Link to PER

AUDIT HISTORY

Change Date	Auditor	Comments
10/07/2008 08:52	Owen, Annette	Responsible Manager Task Launched by Owen, Annette
01/22/2009 13:49	Hanni, Jon	Change to Cause Analysis screen/Corrective Action plan.
01/26/2009 14:15	Glaman, Linda R	'Screening Program' was added. 'Screening Safety Managemnt Program' was added.
01/26/2009 14:17	Glaman, Linda R	Corrective actions Launched by Glaman, Linda R
05/13/2009 14:14	Glaman, Linda R	Change to Cause Analysis screen/Corrective Action plan.
05/13/2009 14:15	Glaman, Linda R	extend CA .1 per attached email request. LBG We are fully staffed now and are making good progressing in training and qualifications so I see us improving in this area as well as other in the near future. J Hanni for J Rolph 5-11-09

-- End of Report --
08/06/2009 08:24 AM

Task# WRPS-PER-2008-0009

E-STARS[R] Report
Task Detail Report
08/06/2009 0913

TASK INFORMATION			
Task#	WRPS-PER-2008-0009		
Subject	PIE; Weakness was discovered with procedure TFC-ESHQ-RP_MON-C-24, REV E-2, "Sealed Radioactive Source Accountability and Contr		
Parent Task#		**Status**	Open
Reference		**Due**	07/26/2009
Originator	^PER Coordinator	**Priority**	Medium
Originator Phone		**Category**	PER
Origination Date	10/02/2008 1411	**Generic1**	None
Remote Task#		**Generic2**	None
Deliverable	PER Review	**Generic3**	None
Class	None	**View Permissions**	Global
Instructions	*No Instructions*		

ROUTING LISTS

1	Corrective actions Routing Lis	Active
	To launch Corrective actions.	
	• ^PER CAs - Assign - Awaiting Response - Due Date - 07/22/2009 0000 *Instructions:*	
2	Responsible Manager	Inactive
	Evaluate suggestion, enter comments and required actions on PIE/CIM tab of the PER. Disposition in accordance with TFC-ESHQ-Q_C-C-01, Problem Evaluation Request.	
	• Rolph, Jim T - Assign - Completed with comments - 01/22/2009 1403 *Instructions:* ↳ *Routing List:* Route List - Inactive *Instructions:* • Hanni, Jon - Approve - Approved with comments - 01/22/2009 1350	
	• Rolph, Jim T - Assign - Completed with comments - 01/22/2009 1405 *Instructions:* Did you contact the originator about the PER? Document your contact in the response window.	
3	Review Initial PER	Inactive
	Review New PER	
	• ^SO(Andrews, Jeffrey E) - Review - Concur - 10/02/2008 1414 *Instructions:*	
	• ^PER Screening(Brown, Nancy L) - Review - Concur - 10/06/2008 1608 *Instructions:*	
	• ^Mgr Review(Owen, Annette) - Review - Concur - 10/07/2008 0852 *Instructions:*	

ATTACHMENTS

Attachments	1. Extension Request WRPS-PER-2008-0009_ 0024_ 0029.msg 2. Link to PER

COMMENTS

Task# WRPS-PER-2008-0009

Poster	^PER Coordinator (Owen, Annette) - 12/01/2008 1448
	Extend to 1/31/09 per attached e-mail request.
	"The issues in this PER were identified prior to an ORP assessment (A-08-TANKFARM-010) of the sealed radioactive source control program. A couple more PERs will be written upon receipt of the assessment report from ORP. The source control company technical authority (CTA) has scheduled a meeting with all of the source custodians to discuss all issues that have been identified as part of this assessment and determine the necessary corrective actions. The goal is to consolidate all improvements into one procedure revision instead of several small ones. It is recommended that the deadline for this PER be extended to January 31, 2009 so corrective actions can be identified and procedure/form changes can be worked through the review and implementation processes. Once corrective actions have been chosen, the CTA may elect to roll up all of the source assessment related PERs if necessary."
Poster	Hanni, Jon - 01/22/2009 1350
	Approve
	PIE/CIM Evaluation has been completed and corrective actions identified.
Poster	Rolph, Jim T - 01/22/2009 1403
	Completed
	Task completed
Poster	Rolph, Jim T - 01/22/2009 1405
	Completed
	Complete
Poster	^PER Coordinator (Glaman, Linda R) - 05/13/2009 1415
	Due Date Extension
	extend CA .1 per attached email request. LBG We are fully staffed now and are making good progressing in training and qualifications so I see us improving in this area as well as other in the near future. J Hanni for J Rolph 5-11-09

TASK DUE DATE HISTORY

Modified	05/13/2009 1416 - ^PER Coordinator	**New Due Date**	07/26/2009 0000
Modified	01/26/2009 1417 - ^PER Coordinator	**New Due Date**	04/18/2009 0000
Modified	01/26/2009 1417 - ^PER Coordinator	**New Due Date**	04/14/2009 0000
Modified	12/01/2008 1447 - ^PER Coordinator (Owen, Annette)	**New Due Date**	02/04/2009 1630
Modified	10/07/2008 0852 - ^PER Coordinator	**New Due Date**	12/01/2008 1630
Modified	10/07/2008 0852 - ^PER Coordinator	**New Due Date**	12/01/2008 1630
Modified	10/02/2008 1411 - ^PER Coordinator	**New Due Date**	10/04/2008 1630

SUB TASK HISTORY

Subtask#	WRPS-PER-2008-0009.1				
Subject	WRPS-PER-2008-0009; PIE; Change procedure (TFC-ESHQ-RP_MON-C-24) as indicated in the "Evaluation				
Originator	^PER CAs				
	Routing List	Corrective Action			
		Assignee	Hanni, Jon	**Response**	Completed w/Com
		Assignee	Rolph, Jim T	**Response**	Concur w/Com

Task# WRPS-PER-2008-0009

-- end of report --

Message

From: Owen, Annette
Sent: Monday, December 01, 2008 11:28 AM
To: ^WRPS Corrective Action Group
Subject: Extension Request WRPS-PER-2008-0009, 0024, 0029

From: Brey, K Kristine
Sent: Monday, December 01, 2008 11:09 AM
To: Hanni, Jonathan B; Matarazzo, Laci D; Owen, Annette
Cc: Rolph, James T; Brey, K Kristine
Subject: RE: EXTENSION ON WRPS-ISMS-2008-0005.4, 0029 & 0024

Hi - I am going to forward this to the Corrective Action Management group (Annette Owen), whom I believe can help you with extensions.

The only thing I am helping to track is the ISMS item (WRPS-ISMS-2008-0005.4), and it does not appear that an extension is needed.

Hope this will help you - thanks - K2

Kristine Brey, *Manager*
Laboratory Support Services
373-3076

From: Hanni, Jonathan B
Sent: Monday, December 01, 2008 10:04 AM
To: Matarazzo, Laci D; Brey, K Kristine
Cc: Rolph, James T
Subject: RE: EXTENSION ON WRPS-ISMS-2008-0005.4, 0029 & 0024

The extension requests should apply to:
WRPS-PER-2008-0009, currently due 12/1/08 (today)
WRPS-PER-2008-0024, currently due 12/6/08
WRPS-PER-2008-0029, currently due 12/6/08

The request does not apply to WRPS-ISMS-2008-0005.4 as it is not a PER.

Jonathan B. Hanni
Radiological Controls
2750E/C-113/200 East, MSIN: R1-05
Office: 509-373-4017, Cell: 509-619-3568
Fax: 509-372-1664

washington_river_protection_solutic

From: Matarazzo, Laci D
Sent: Tuesday, November 25, 2008 1:01 PM
To: Brey, K Kristine
Cc: Rolph, James T; Hanni, Jonathan B
Subject: EXTENSION ON WRPS-ISMS-2008-0005.4, 0029 & 0024

Kristine,

I need to extend the following E-Star actions, with the justification of: "The issues in this PER were identified prior to an ORP assessment (A-08-TANKFARM-010) of the sealed radioactive source control program. A couple more PERs will be written upon receipt of the assessment report from ORP. The source control company technical authority (CTA) has scheduled a meeting with all of the source custodians to discuss all issues that have been identified as part of this assessment and determine the necessary corrective actions. The goal is to consolidate all improvements into one procedure revision instead of several small ones. It is recommended that the deadline for this PER be extended to January 31, 2009 so corrective actions can be identified and procedure/form changes can be worked through the review and implementation processes. Once corrective actions have been chosen, the CTA may elect to roll up all of the source assessment related PERs if necessary."

I have not requested an extension on an action like this before, if this is not the correct way to-do so, please let me know.

Thank you,

Laci Matarazzo

Radiological Controls, WRPS
373-4696
2750E C-101

Task# WRPS-PER-2008-0009.1

E-STARS[R] Report
Task Detail Report
08/06/2009 1027

TASK INFORMATION			
Task#	WRPS-PER-2008-0009.1		
Subject	WRPS-PER-2008-0009; PIE; Change procedure (TFC-ESHQ-RP_MON-C-24) as indicated in the "Evaluation		
Parent Task#	WRPS-PER-2008-0009	**Status**	Open
Reference	WRPS-PER-2008-0009	**Due**	07/22/2009
Originator	^PER CAs	**Priority**	Medium
Originator Phone		**Category**	PER
Origination Date	01/26/2009 1417	**Generic1**	None
Remote Task#		**Generic2**	None
Deliverable	PER Review	**Generic3**	None
Class	None	**View Permissions**	Global
Instructions	*No Instructions*		

ROUTING LISTS

1	Corrective Action	Active
	Change procedure (TFC-ESHQ-RP_MON-C-24) as indicated in the "Evaluation of PIE/CIM Initiative" field above. RESPONSIBLE MANAGER: When this corrective action is complete, enter a closure statement in E-STARS and close the E-STARS subtask. Refer to the Problem Evaluation Request procedure TFC-ESHQ-Q-C-C-01, Section 4.4 for closure documentation requirements	
	• Hanni, Jon - Assign - Completed with comments - 06/15/2009 1458 *Instructions:*	
	• Rolph, Jim T - Review - Concur with comments - 06/16/2009 0650 *Instructions:*	

ATTACHMENTS

Attachments	1. A-6003-939_REV2.docx 2. ADCA for TFC-ESHQ-RP_MON-C-24,RevF.pdf 3. Extension Request WRPS-PER-2008-0009_ 0024_ 0029.msg 4. Form Design Request for A-6003-939.pdf 5. Link to PER 6. Re_ Extension Request for _WRPS-PER-2008-0009_1_ PERs associated with A-08-ESQ-TANKFARM-010.msg 7. TFC-ESHQ-RP_MON-C-24,_Sealed_Radioactive_Source_Accountability_and_Control.doc

COMMENTS

Poster	^PER Coordinator (Glaman, Linda R) - 05/13/2009 1415
	Due Date Extension
	extend CA .1 per attached email request. LBG We are fully staffed now and are making good progressing in training and qualifications so I see us improving in this area as well as other in the near future. J Hanni for J Rolph 5-11-09
Poster	Hanni, Jon - 06/15/2009 1458
	Completed

Task# WRPS-PER-2008-0009.1

	TFC-ESHQ-RP_MON-C-24, REV F, "Sealed Radioactive Source Accountability and Control" was issued on May 14, 2009 (see attached procedure and ADCA). This revision modified the designation of source custodian process so RadCon management is no longer required to designate source custodian delegate. The TOC Designation of Source Custodian form (A-6003-939) has also been revised (see attached) with a note reading, "This form expires 1 year after the date it was signed by Project Radiological Control Level 2 Manager/Manager."
Poster	Rolph, Jim T - 06/16/2009 0650
	Concur
	TFC-ESHQ-RP_MON-C-24, REV F, "Sealed Radioactive Source Accountability and Control" was issued on May 14, 2009 (see attached procedure and ADCA). This revision modified the designation of source custodian process so RadCon management is no longer required to designate source custodian delegate. The TOC Designation of Source Custodian form (A-6003-939) has also been revised (see attached) with a note reading, "This form expires 1 year after the date it was signed by Project Radiological Control Level 2 Manager/Manager."

TASK DUE DATE HISTORY

Modified	05/13/2009 1416 - ^PER Coordinator	**New Due Date**	07/15/2009 0000
Modified	01/26/2009 1417 - ^PER CAs	**New Due Date**	04/10/2009 0000
Modified	01/26/2009 1417 - ^PER CAs	**New Due Date**	04/14/2009 0000

SUB TASK HISTORY

No Subtasks

-- end of report --

Task# WRPS-PER-2008-0009.1

E-STARS[R] Report
Task Detail Report
08/06/2009 1029

TASK INFORMATION			
Task#	WRPS-PER-2008-0009.1		
Subject	WRPS-PER-2008-0009; PIE; Change procedure (TFC-ESHQ-RP_MON-C-24) as indicated in the "Evaluation		
Parent Task#	WRPS-PER-2008-0009	**Status**	Open
Reference	WRPS-PER-2008-0009	**Due**	07/22/2009
Originator	^PER CAs	**Priority**	Medium
Originator Phone		**Category**	PER
Origination Date	01/26/2009 1417	**Generic1**	None
Remote Task#		**Generic2**	None
Deliverable	PER Review	**Generic3**	None
Class	None	**View Permissions**	Global
Instructions	*No Instructions*		

ROUTING LISTS

1	Corrective Action	Active
	Change procedure (TFC-ESHQ-RP_MON-C-24) as indicated in the "Evaluation of PIE/CIM Initiative" field above. RESPONSIBLE MANAGER: When this corrective action is complete, enter a closure statement in E-STARS and close the E-STARS subtask. Refer to the Problem Evaluation Request procedure TFC-ESHQ-Q-C-C-01, Section 4.4 for closure documentation requirements	
	• Hanni, Jon - Assign - Completed with comments - 06/15/2009 1458 *Instructions:*	
	• Rolph, Jim T - Review - Concur with comments - 06/16/2009 0650 *Instructions:*	

ATTACHMENTS

Attachments	1. A-6003-939_REV2.docx 2. ADCA for TFC-ESHQ-RP_MON-C-24,RevF.pdf 3. Extension Request WRPS-PER-2008-0009_ 0024_ 0029.msg 4. Form Design Request for A-6003-939.pdf 5. Link to PER 6. Re_ Extension Request for _WRPS-PER-2008-0009_1_ PERs associated with A-08-ESQ-TANKFARM-010.msg 7. TFC-ESHQ-RP_MON-C-24,_Sealed_Radioactive_Source_Accountability_and_Control.doc

COMMENTS

Poster	^PER Coordinator (Glaman, Linda R) - 05/13/2009 1415
	Due Date Extension
	extend CA .1 per attached email request. LBG We are fully staffed now and are making good progressing in training and qualifications so I see us improving in this area as well as other in the near future. J Hanni for J Rolph 5-11-09
Poster	Hanni, Jon - 06/15/2009 1458
	Completed

Task# WRPS-PER-2008-0009.1			
	TFC-ESHQ-RP_MON-C-24, REV F, "Sealed Radioactive Source Accountability and Control" was issued on May 14, 2009 (see attached procedure and ADCA). This revision modified the designation of source custodian process so RadCon management is no longer required to designate source custodian delegate. The TOC Designation of Source Custodian form (A-6003-939) has also been revised (see attached) with a note reading, "This form expires 1 year after the date it was signed by Project Radiological Control Level 2 Manager/Manager."		
Poster	Rolph, Jim T - 06/16/2009 0650		
	Concur		
	TFC-ESHQ-RP_MON-C-24, REV F, "Sealed Radioactive Source Accountability and Control" was issued on May 14, 2009 (see attached procedure and ADCA). This revision modified the designation of source custodian process so RadCon management is no longer required to designate source custodian delegate. The TOC Designation of Source Custodian form (A-6003-939) has also been revised (see attached) with a note reading, "This form expires 1 year after the date it was signed by Project Radiological Control Level 2 Manager/Manager."		
TASK DUE DATE HISTORY			
Modified	05/13/2009 1416 - ^PER Coordinator	**New Due Date**	07/15/2009 0000
Modified	01/26/2009 1417 - ^PER CAs	**New Due Date**	04/10/2009 0000
Modified	01/26/2009 1417 - ^PER CAs	**New Due Date**	04/14/2009 0000
SUB TASK HISTORY			
No Subtasks			

-- end of report --

TOC DESIGNATION OF SOURCE CUSTODIAN

DATE: _____

SOURCE CUSTODIAN: _____

PHONE: _____

TFC-ESHQ-RP_MON-C-24 requires source custodians be designated by management, trained as a radiation worker in accordance with the HNF-5183, and trained in site-specific source accountability procedures (Course 351529).

TRAINING VERIFICATION:

Rad Worker I	☐	Date: _____
Rad Worker II	☐	Date: _____
Initial Source Custodian Training (Course 351529)	☐	Date: _____
Course 351529 has been assigned in item profile	☐	Date: _____

TYPE OF SOURCE CUSTODIAN:

Source Custodian ☐

Source Custodian Delegate ☐

CONCURRENCE SIGNATURE:

_____ _____

Project RadCon Manager Date

NOTE: This form expires 1 year after the date it was signed by Project Radiological Control Level 2 Manager / Manager.

Forward a copy to the Facility POC and the Company Technical Authority (CTA)

ADMINISTRATIVE DOCUMENT CHANGE AUTHORIZATION

(See page 3 for form completion instructions)

1. Document Number	2. Document Title
TFC-ESHQ-RP_MON-C-24 Current Revision E-3 - To - Next Revision F	Sealed Radioactive Source Accountability and Control

3. Document Type: (●) Procedure ( ) Standard ( ) Guidance Doc. ( ) Mgmt. Directive ( ) Policy ( ) Plan ( ) Charter

4. Type of Change: ( ) New (●) Major Revision ( ) Minor Revision ( ) Periodic Review ( ) Cancellation

5. Initiated by	6. Phone	7. Mailstop	8. Date
J. B. Hanni	373-4017	R1-05	05/09/09

9. Document Owner	10. Functional Area Manager
J. B. Hanni	J. T. Rolph

11. Proposed Changes	12. Reason for Change
Section 3.0: Insert a new third paragraph (see mark-up draft of procedure)	Inserted as part of a corrective action for CH2M-PER-2008-1569.
Section 4.1, Number 3, Amend text (see mark-up draft of procedure)	This is a corrective action associated with WRPS-PER-2008-0009.
Section 4.10, Insert new step 4 (see mark-up draft of procedure)	Part of corrective action driven by WRPS-PER-2009-0213.
Section 4.11, Step 1, Bullet 2, revise reference to DOE G 441.1-1C, Chapter 15.0	The referenced document has been revised, so the reference in the procedure needs to be updated accordingly.
Section 4.11, Step 1, Bullet 4, Amend text (see mark-up draft of procedure)	Corrective action associated with WRPS-PER-2008-0382.
Section 4.11, Insert new Step 2 (see mark-up draft of procedure)	Corrective action to WRPS-PER-2009-0213.
Section 4.11, Reword step 9 (formerly step 8, renumbered with insertion of new step 2),	Reworded in response to CH2M-PER-2008-1569.
Insert new Section 4.12 (See mark-up draft of procedure)	Corrective action to WRPS-PER-2009-0213
Section 7.1.1 Revise requirement numbers for a-r and v-w, add a requirement x (see mark-up draft of procedure)	HNF-MP-5184, Rev 7 renumbers requirements from 10 CFR 835. Added requirement x as corrective action to CH2M-PER-2008-1569
Section 7.1, add "5. CH2M-PER-2008-1569" and "6. WRPS-PER-2009-0213"	PERs CH2M-PER-2008-1569 and WRPS-PER-2009-0213 are both pers with resolution that drive most of the changes in this revision of the procedure.
Section 7.2, add "9. Nuclides and Isotopes: Chart of the Nuclides, 16th Ed., Lockheed Martin (2002)", "10. WRPS-PER-2008-0382", and "11. WRPS-PER-2008-0009."	These references are either cited in the procedure or are PERs that have driven some of the changes to this revision of the procedure.
Figure 1. Modify flowchart according to attached redline version (scanned pdf).	Flowchart needs to be amended to be consistent with procedure changes.

ADMINISTRATIVE DOCUMENT CHANGE AUTHORIZATION (continued)

1. Document Number	2. Document Title
TFC-ESHQ-RP_MON-C-24 Current Revision E-3 - To - Next Revision F	Sealed Radioactive Source Accountability and Control

IMPACTED DOCUMENTS

13. Does the change impact TFC-PLN-100? ○ Yes ◉ No If Yes, add impacted document to block 15 and initiate ADCA.

14. Does the change impact RPP-MP-003? ○ Yes ◉ No If Yes, add impacted document to block 15 and initiate ADCA.

15. Identify all impacted documents and Document Owners, and whether an ADCA needs to be completed

Procedure Number	Procedure Title	Document Owner	ADCA (Yes/No)
N/A	N/A	N/A	N/A

16. Training (please read):

It is the sole responsibility of the Functional Area Manager, Document Owner, or designee to determine all of the following:

- Training needs, or another method for communication, for a new or document revision (including who should receive training)
- When training/communication should be administered (before or after revision issuance)
- How training/communication should be documented (e.g., by roster).

Training/communication methods can include:

- Formal training [Contact the Training organization for assistance.]
- Tailgate meeting
- Staff meeting
- Required reading.

REVIEWERS

17. Designated Reviewing Organizations:

☐ Assessments	☐ ISMS	☐ Quality Assurance
☐ Communications	☐ Legal	☒ Radiological Control
☐ Contracts	☐ Maintenance	☐ Safety and Health
☐ Emergency Management	☐ Operations	☐ Training
☐ Engineering	☐ PAAA	☐ Waste Management
☐ Environmental	☐ Procedures	☐ Work Planning
☐ Finance	☐ Procurement	☐ 222-S Laboratory
☐ Human Resources	☐ Projects	☐ Other _____
☐ Information Resource Management	☐ Property	☐ Not Applicable

APPROVALS

18.

TFC-PLN-100 Interpretive Authority (print and sign)/Date ☒ N/A (see Instructions)

19. USQ

○ USQ _____
USQ Evaluator (print and sign) & USQ Number/Date

○ USQ-CAT-EX _____
USQ Evaluator or Individual Designated by NS (print and sign) & USQ Number/Date

○ Out of Scope _____
Print Name and Sign/Date

ADMINISTRATIVE DOCUMENT CHANGE AUTHORIZATION (continued)

1. Document Number	2. Document Title
TFC-ESHQ-RP_MON-C-24 Current Revision E-3 - To - Next Revision F	Sealed Radioactive Source Accountability and Control

20.

Document Owner (print and sign)/Date (Signature also verifies that all comments were resolved)

Functional Area Manager (print and sign)/Date

Procedures (print and sign)/Date

ADMINISTRATIVE DOCUMENT CHANGE AUTHORIZATION INSTRUCTIONS

1) Document Number and Current/Next Revisions: The current document number and current to next revision number or the new document number and revision provided by the Procedures group.

2) Document Title: The title of the document being revised or the title of the new document. (Does the title convey the intent of the document to the user?)

3) Document Type: Indicate document type by marking the appropriate box. (See TFC-PLN-80 for definitions.)

4) Type of Change: New document, a major or minor change to the existing document, periodic review, or cancellation.

5) Initiated by: Name of the person initiating the change.

6) Phone: Enter a cell phone number or office phone number where the initiator can be reached.

7) Mail Stop: The mail stop of the initiator.

8) Date: The date of submittal for the change. (This is not the implementation date or effective date of the change.)

9) Document Owner: The person assigned by the Functional Area Manager (TFC-BSM-AD-C-01, Section 3.2). See document ownership matrix on the procedures web page.

10) Functional Area Manager: The person responsible for implementation of the document (TFC-BSM-AD-C-01, Section 3.1.) See document ownership matrix on the procedures web page.

11) Proposed Changes: Clearly state changes to be made.

12) Reason for Change: Explain why the change is necessary (e.g., the process has to be modified due to a new requirement, change in organizational responsibility).

13) TFC-PLN-100: Review TFC-PLN-100 for impacts. If impacted, list TFC-PLN-100 in block 15 and initiate an ADCA to revise it per TFC-BSM-AD-C-01.

14) RPP-MP-003: Review RPP-MP-003 for impacts. If impacted, list RPP-MP-003 in block 15 and initiate an ADCA to revise it per TFC-BSM-AD-C-01.

15) Impacted Documents: Does the new document or major or minor change affect any other organizations? Does it affect any other procedures (processes) or documents in other organizations? Contact the POCs for the other organizations to ensure impacts have been identified. (Contact the Procedures organization for current POC list.) Perform a search for all references to the document being changed and list those impacted by the change. It is the document owner's responsibility to identify other impacted documents and to fill out the additional ADCAs.

16) Training or Method of Communication: Determine if a new document or document change requires formal training or whether a less formal method of communication is sufficient. Determine the audience that should receive the training/communication and when they should receive such training/communication (before or after document implementation).

17) Designated Reviewing Organizations: List organizations that should review the proposed change. See TFC-BSM-AD-C-01. Identify minimum reviewers. If no reviews are necessary, check "N/A."

18) TFC-PLN-100 Interpretive Authority/Date: Signature by IA indicates completion of review. (Check "N/A" if this revision **does not** <u>change or delete</u> an existing contract requirement implementation, and **does not** <u>add</u> such an implementation.)

19) USQ: USQ evaluator checks the "USQ" block and signs and dates and enters the USQ number when a USQ evaluation is performed. If the change is classified as "inconsequential" as defined by TFC-ENG-SB-C-03, the USQ evaluator or individual designated by Nuclear Safety checks the "USQ-CAT-EX" block, signs and dates, and enters the USQ number. If the document is listed in RPP-27195, no USQ is required; check the "Out of Scope" block and print, sign, and date.

22) Document Owner/Date: By signing, the document owner has reviewed and agrees with the ADCA and that the decisions/choices made address the change and the training necessary. (Signature also verifies that all comments were resolved.)

Functional Area Manager/Date: By signing this block, the Functional Area Manager is giving approval for the new or changed document. (See TFC-BSM-AD-C-01, Section 3.1, for responsibilities of the functional area manager.)

Procedures/Date: Final signature by Procedures prior to issuance of document.

FORMS DESIGN REQUEST

1. ◯ New form ◉ Revised form

2. Form no. *(disregard if new)* A-6003-939

3. Title of form *(limit to 100 characters)*
TFC Designation of Source Custodian

4. Form will be available in the following media:
- ☒ Electronic fill-in
- ☐ Electronic print only
- ☐ Electronic instructions that print separately
- ☐ Hard copy (enter Design/Printing Specifications below)

5. Contractor AND Organization responsible for this form:
WRPS Radiological Controls

6. Form required by *(ENTER specific DOE Order/HNF, or Procedure number)*
TFC-ESHQ-RP_MON-C-24, "Sealed Radioactive Source Accountability and Control"

7. Electronic form no. 1 _____ Electronic form no. 2 _____
Electronic instruction no. _____

8. After fill-in is form classified? ◯ Yes ◉ No

9. Is completed form sent outside your company? ◯ Yes ◉ No

10. Company logo requested? *(logos need DOE approval)* ◯ Yes ◉ No

11. Are blank forms controlled (i.e., only one person/org. can order printed forms)? ◯ Yes ◉ No *If forms are controlled, who MAY order form?*

12. **If any other form(s)** is/are being canceled or superseded by new/revised form give form number(s).
◯ Superseded N/A
◯ Canceled

DESIGN/PRINTING SPECIFICATIONS **(not applicable if electronic only)**

13. Number of originals

14. Size: Horizontal: _____ Vertical: _____

15. Ink color

16. Paper Weight: Color:

17. ◯ One sided ◯ Continuous feed *(pin feed)* ◯ Two sided ◯ Mylar Edge

18. Reverse side print head to: ◯ Head ◯ Left of back ◯ Foot ◯ Right of back

19. ☐ Carbonless/NCR No. of parts _____

20. ☐ Pad Sheets per pad _____

21. ☐ Hole punching required | No. of holes | Size of holes | Spacing

22. Binding margin: ◯ Left ◯ Right ◯ Top

23. Pre-numbering required? ◯ Yes ◯ No

24. Special instructions *(such as perforations, collate, score, pagination instructions, POC if different from initiator, etc.)*

25. Disposition of existing store stock supply *(if form is stocked by Stores, and is to be destroyed, attach completed Store Order for remaining supply)*
- ◯ Previous revision may be used until depleted
- ◯ Destroy immediately - submit a STORE ORDER
- ◯ Use previous revision until receipt of new revision, then destroy - submit a STORE ORDER
- ◯ Other -

Request initiated by *(Owner of form)*	HID No.	Building/Room/Area	MSIN	Phone No.
Jonathan Hanni	2391068	2750E/C-108/200E	R1-05	373-4017

Manager or Designated Liaison	Date Submitted
James T. Rolph	05/08/2009

PHMC/CH2M/DOE B1-03

A-6100-422 (05/04)

FORMS ADMINISTRATION USE ONLY

ORIGINATING CONTRACTOR APPROVAL

After analysis, form design is approved:

☐ As drafted

☐ With changes *(specify)* _____

_____

_____

_____

Originating Contractor Forms Administration _____ Date _____

SITE ADMINISTRATION APPROVAL

☐ Form replicated elsewhere in system. Design NOT approved.

☐ Form not replicated elsewhere in system. Design approved.

PHMC Forms Administration _____ Date _____

DEPARTMENT OF ENERGY - RICHLAND OPERATIONS APPROVALS *(If applicable)*

Privacy Act Statement is required. ☐ Yes ☐ No

Conversion to electronic media and placement on HLAN approved. ☐ Yes ☐ No

Comments _____

_____

_____

DOE-RL Privacy Act Officer _____ Date _____

(If Applicable) Use of logo approved. ☐ Yes ☐ No

DOE-RL Forms Officer _____ Date _____

~~TFC~~ TOC DESIGNATION OF SOURCE CUSTODIAN

DATE: _____

SOURCE CUSTODIAN: _____

PHONE: _____

TFC-ESHQ-RP_MON-C-24 requires source custodians be designated by management, trained as a radiation worker in accordance with the HNF-5183, and trained in site-specific source accountability procedures (Course 351529).

TRAINING VERIFICATION:

Rad Worker I	☐	Date: _____
Rad Worker II	☐	Date: _____
Initial Source Custodian Training (Course 351529)	☐	Date: _____
Course 351529 has been assigned in item profile	☐	Date: _____

TYPE OF SOURCE CUSTODIAN:

Source Custodian ☐

Source Custodian Delegate ☐

CONCURRENCE SIGNATURE:

_____ _____

Project RadCon Manager Date

Forward a copy to the Facility POC and the Company Technical Authority (CTA)

Insert the following note:

Note: This form expires 1 year after the date it was signed by Project Radiological Control Level 2 Manager/Manager.

Ownership matrix

TABLE OF CONTENTS

1.0 PURPOSE AND SCOPE 2
2.0 IMPLEMENTATION 2
3.0 RESPONSIBILITIES 2
4.0 PROCEDURE 2
- 4.1 Requirements 3
- 4.2 Source Procurement 4
- 4.3 Receipt of New Sources 4
- 4.4 Source Identification 5
- 4.5 Source Storage 6
- 4.6 Source User Briefing 6
- 4.7 Source Issue and Use 7
- 4.8 Source Transfers 8
- 4.9 Source Transport to PNNL 9
- 4.10 Inventory of Sealed Sources 9
- 4.11 Integrity Testing Sealed Sources 11
- 4.12 Completing TOC Radioactive Source Inventory and Accountable Source Integrity Test Record (A-6003-020) for Sources that have been Exempted from Inventory and Integrity Testing Requirements 14
- 4.13 Removing a Source from Service 15
- 4.14 Source Disposal 16
- 4.15 Lost Sources 16

5.0 DEFINITIONS 16
6.0 RECORDS 17
7.0 SOURCES 18
- 7.1 Requirements 18
- 7.2 References 18

TABLE OF FIGURES

Figure 1. Sealed Source Flowchart 20

1.0 PURPOSE AND SCOPE
(7.1.1.s, 7.1.1.t, 7.1.1.u)

This procedure describes the process used to identify, track, and control DOE owned accountable and exempt sealed radioactive sources. This procedure does not apply to sealed radioactive sources consisting solely of gaseous radioactive material or tritium. Consumer products, such as sources on the portable Geiger Mueller (GM), are considered outside the scope of controls by 10 CFR 835 and HNF-5183 and therefore not required to be integrity tested, inventoried, or labeled. Fixed and portable instruments with internal sources with activities that are less than 10% of the values found in Appendix 4A of the HNF-5183 are not required to be controlled per this procedure and should be controlled as radioactive material in accordance with HNF-5183, Article 412. (7.1.3)

This procedure applies to all WRPS personnel and subcontractors.

2.0 IMPLEMENTATION

This procedure is effective on the date shown in the header.

3.0 RESPONSIBILITIES

The project radiological control manager ensures in writing that any contractor bringing a non DOE-owned sealed radioactive source onto the site possesses a U.S. Nuclear Regulatory Commission (NRC) license or license issued by an NRC agreement state. Additionally, the project radiological control manager shall review the license, personnel training, and verify users are trained according to the license. Such source(s) will be exempt from this procedure. However, the project radiological control manager shall provide oversight of the contractor source control program at a level commensurate with the associated radiological hazard according to TFC-ESHQ-S_SAF-C-07.

The RadCon Program will maintain ownership of an accountable source index. Facility points of contact (POC) are responsible for maintaining ownership of all Sealed Radioactive Source Index forms (A-6004-196) for their project. Source custodians are responsible for completing the Sealed Radioactive Source Index form (A-6004-196) for their assigned sources and for forwarding the index to the project radiological control manager for approval. The project radiological control manager is responsible for reviewing and approving indexes for their project, forwarding the original to the facility POC and copies to the company technical authority (CTA) and source custodian upon completion of the inventory and integrity test cycle, when updated, and upon request.

Source custodians are responsible for knowing the type(s), levels, and energies of radiations emitted by each source assigned to them. Isotopic information including the half-life and modes of decay can be found in references such as: "Nuclides and Isotopes: Chart of the Nuclides," 16th Ed., Lockheed Martin (2002).

Additional responsibilities are contained within Section 4.0.

4.0 PROCEDURE

See Figure 1 for process flowchart.

4.1 Requirements

1. Radioactive source custodians and delegates shall be Radiological Worker I qualified, as a minimum, in accordance with 10 CFR 835.901 and HNF-5183, Article 632. (7.1.1.a)

2. Source issuers and users shall be Radiological Worker I qualified, as a minimum, in accordance with 10 CFR 835.901 and HNF-5183, Article 632.

3. The project radiological control manager must designate source custodians by annually completing TOC Designation of Source Custodian (A-6003-939). A new TOC Designation of Source Custodian form must be completed upon designation of a new source custodian.

   NOTE: Workers who have completed course 351529, "Source Custodian Training" but have not been designated as a source custodian by their project radiological control manager will be considered source custodian delegates.

4. The applicable manager for source custodian assigns course 351529 in the Integrated Training Electronic Matrix (ITEM) profile of source custodians and delegates.

5. Personnel handling sources should be trained commensurate with their associated duties as follows:

   - Course 351529, "Source Custodian Training," for Source Custodian and delegate (biennial re-qualification) users and issuers for all sources
   - Course 356430, "TOC Radioactive Source Issue and Use," for Health Physics Technician (HPT) users and issuers for exempt-quantity sources
   - Course 356424, "TOC Radioactive Source User Briefing," for source users other than HPTs
   - RGD custodian and operators are trained in accordance to TFC-ESHQ-RP-STD-04.

6. Sources (accountable and exempt) or their storage containers shall be labeled with the radiation symbol and "CAUTION RADIOACTIVE MATERIAL" or "DANGER RADIOACTIVE MATERIAL," source identification number, radionuclide, activity (with units preferably in μCi), assay date, custodian, and custodian phone number unless exempted by HNF-5183, Article 412.2. (7.1.1.e, 7.1.1.f, 7.1.1.g, 7.1.1.v)

7. An inventory is performed for all accountable and exempt radioactive sources at least every six months. (7.1.1.j)

8. Except for sealed radioactive sources consisting solely of gaseous radioactive material or tritium, each accountable sealed radioactive source is subject to a source integrity test upon receipt, when damage is suspected, and at intervals not to exceed six months (plus 30 day grace period). (7.1.1.m, 7.1.1.n, 7.1.1.w)

   NOTE: Source integrity tests must be capable of detecting radioactive material leakage equal to or exceeding 0.005 μCi (11,100 dpm).

9. Any sealed radioactive source found to be leaking 11,100 dpm or more of radioactive material shall be removed from service and controlled to minimize the spread of contamination. (7.1.1.r)

10. The removal of a radioactive source(s) from the assigned source storage location must be recorded on the TOC Radioactive Source Checkout Log Sheet (A-6003-019). (7.1.1.h)

11. Prior to obtaining new sources, contact the CTA for possible local source availability on site. Procurement of radioactive sources shall be coordinated through the applicable source custodian with concurrence of the CTA.

12. An initial receipt survey shall be performed by project radiological control as soon as practical, but no later than eight hours after the beginning of the work day following receipt of a sealed radioactive source. (7.1.1.d)

13. Sealed radioactive sources, including radiography sources, shall not be brought on site by external organizations without the prior knowledge and approval of the project radiological control manager.

14. Source custodians maintain a field file for each source under their control. Field files should include copies of interoffice memos, birth certificate, most recent calibration, inventory and integrity test records for two years, source disposal forms, and source transfer forms, as applicable and when available.

15. Sources used to calibrate radiation detection equipment shall be NIST traceable. NIST traceability can be maintained from birth or established by comparison to a NIST traceable standard (e.g., PNNL calibration source).

4.2 Source Procurement

Radiological Control/ Line Management	1.	Assign a source custodian. (7.1.1.a)
	2.	Ensure that the assigned source custodian has been trained according to the requirements stated in Section 4.1, item 5. (7.1.1.a)
	3.	Prior to obtaining new sources, notify the CTA for on site source availability.
Person Procuring Source	4.	Coordinate procurement of radioactive sources with the applicable source custodian and CTA.
	5.	Procure radioactive sources in accordance with TFC-BSM-CP_CPR-C-06.

4.3 Receipt of New Sources

Source Custodian	1.	Notify the applicable radiological control first line manager immediately upon receiving source.

2. Obtain an HPT and inspect the package for damage and possible loose contamination.

3. Have an HPT perform a receipt survey of the package as soon as practicable, but no later than eight hours after the beginning of the working day following receipt of the package. (7.1.1.b, 7.1.1.c, 7.1.1.d)

4. Ensure a radiation and contamination survey is performed. (7.1.1.b, 7.1.1.c, 7.1.1.d, 7.1.1.m)

5. Ensure integrity test is performed according to section 4.11 upon receipt of new accountable sources prior to use. (7.1.1.m)
6. Obtain original documents of the manufacturer's birth certificate and source inventory and integrity test records. (7.1.1.h)

7. Create a field file.

8. Update and approve the Sealed Radioactive Source Index form (A-6004-196) and forward to the project radiological control manager.

Project Radiological Control Level 2 Manager/Manager

9. Review and approve Sealed Radioactive Source Index form (A-6004-196) and forward original to facility POC and copies to source custodian and CTA. (7.1.1.h)

Facility Point of Contact

10. Maintain original Sealed Radioactive Source Index form (A-6004-196). (7.1.1.h)

Company Technical Authority

11. Review Sealed Radioactive Source Index form (A-6004-196) and update master accountable source index for accountable source changes.

4.4 Source Identification
(7.1.1.e., 7.1.1.f, 7.1.1.g, 7.1.1.k)

Source Custodian

1. Ensure labels are applied directly to all applicable sealed radioactive sources or source containers. Labels shall include:

   - Radiation symbol
   - "CAUTION RADIOACTIVE MATERIAL" or "DANGER RADIOACTIVE MATERIAL"
   - Serial number
   - Radionuclide
   - Date of assay
   - Source custodian
   - Amount of activity (including corresponding units preferably in μCi)
   - Source custodian phone number.

   NOTE: The sources manufacturer's serial numbers should be used (do not abbreviate, truncate, or use the Pacific Northwest National

Laboratory (PNNL) barcode number). CTA assigns a unique source identification number if a serial number is not available.

2. If the size or configuration of a source precludes application of a label, ensure the source, at a minimum, has:

   - Radiation symbol
   - "CAUTION RADIOACTIVE MATERIAL" or "DANGER RADIOACTIVE MATERIAL."

3. Ensure an additional label is placed on the device if the label/tag on the device is not readily visible on the outside of the device.

   NOTE: The additional label should be readily visible on the outside of the equipment, indicate a source is contained within the device, and include words such as "CAUTION RADIOACTIVE MATERIAL."

4.5 Source Storage

Source Custodian

1. Ensure storage rooms, storage containers, or cabinets containing sealed radioactive sources are:

   - Appropriately posted
   - Monitored as required by project routine surveillance program
   - Locked to prevent unauthorized use, where feasible. If locking is not feasible, the following controls shall be implemented:
     - Stored in a posted Radioactive Material Area
     - Labeled as radioactive material, indicating a source is contained within, on outside container and/or device
     - Obtain approval from source custodian and radiological control manager on form (A-6004-196). (7.1.4)

   NOTE 1: Sources that have the potential to generate a High Radiation Area should be locked, when not in use, to prevent unauthorized use.

   NOTE 2: Storage locations are approved by the project radiological control manager on form (A-6004-196).

2. Provide shielded storage for sources with dose rates greater than 5 mrem/hr at 30 cm.

4.6 Source User Briefing

Source Custodian or Delegate

1. Confirm the source user is:

   - Qualified under Radiological Worker I or II training (course 020701 or 020001) (7.1.1.a)

- Trained as a Radiation Worker II if a source may cause a high radiation or very high radiation area to be established (7.1.1.a)
- Trained in accordance with TFC-ESHQ-RP-STD-04 prior to using sources that are considered RGD.

2. Ensure TOC Radioactive Source Users Briefing Checklist (Source Users Briefing, course 356424) is complete. (7.1.2).
3. Maintain a copy for the source custodian files, and send the original checklist to training records.

4.7 Source Issue and Use

NOTE 1: Only trained custodians and delegates who have completed course 351529 may issue accountable sources. (7.1.1.a)

NOTE 2: HPTs who have completed Course 356430, "TOC Radioactive Source Issue and Use" (Source Issue and Use Briefing), may issue exempt sources and use all sources. (7.1.1.a)

NOTE 3: Source users, other than HPTs, who have completed Course 356424, "TOC Radioactive Source User Briefing," may use all sources.

NOTE 4: Transportation of radioactive sealed sources to PNNL is performed in accordance with section 4.9.

Source Custodian, Delegate, or Health Physics Technician

1. Determine if the requested source is accountable or exempt on the TOC Radioactive Source Checkout Log Sheet form (A-6003-019).
2. Ensure that the employee has completed course 356424, "Verification of Source User Briefing," or 356430, "TOC Radioactive Source Issue and Use."
3. If the source is to be used outside the storage location, complete the "Authorizing Person" portion of the TOC Radioactive Source Checkout Log Sheet form (A-6003-019). (7.1.1.h)
4. Verify that the user will be performing work under an approved procedure or Radiological Work Permit (RWP). Ensure the RWP or work document has identified the radiological hazard(s) and is appropriate for the task.

Source User

5. Complete the "Source Checkout" portion of the TOC Radioactive Source Checkout Log Sheet form (A-6003-019). (7.1.1.h)

Source Custodian, Delegate, or Health Physics Technician

6. Upon return of the source, document the source's return on the TOC Radioactive Source Checkout Log Sheet form (A-6003-019). (7.1.1.h)

   NOTE: Only trained custodians and delegates who have completed course number 351529 may complete the source return function for accountable sources.

7. Inspect the source and source container for damage.

8. Return the source to its storage location.

9. Contact project radiological control manager to approve an alternate storage location for the source if a source cannot be returned to the normal storage location before the end of the shift (all criteria of Section 4.5 must be met).

4.8 Source Transfers

Source User

1. Obtain concurrence from the source custodian to arrange for transfer of sources.

   NOTE: Transportation of radioactive sealed sources to PNNL is performed in accordance with section 4.9.

Source Custodian

2. Document transfer of sources to another source custodian on the TOC Radioactive Source Transfer form (A-6003-940).

   NOTE: Both custodians should maintain a copy of the transfer forms.

   a. Document transfer of source(s) to another on-site company through an external letter, in addition to completion of the transfer form, and provide current integrity test and manufacturer's birth certificate, if available.

3. Transfer source to new custodian.

   NOTE: Transfer is not complete until the new custodian has physically accepted the source.

4. Update and approve the Sealed Radioactive Source Index form (A-6004-196) and forward to the project radiological control manager.

Project Radiological Control Level 2 Manager/Manager

5. Review and approve the Sealed Radioactive Source Index form (A-6004-196) and forward original to facility POC and copies to source custodian and CTA.

Facility Point of Contact

6. Maintain original copy of the Sealed Radioactive Source Index form (A-6004-196).

Company Technical Authority

7. Review the Sealed Radioactive Source Index form (A-6004-196) and update master accountable source index for accountable source changes.

4.9 Source Transport to PNNL

Source Custodian, Delegate, or Health Physics Technician

1. Verify training requirements identified in section 4.7 are met.

2. Verify applicable radioactive shipment record is used.

3. Complete the TOC Radioactive Source Checkout Log Sheet (A-6003-019) as follows:

   a. Complete the "Authorized Person" section.

   b. Complete the "Source Checkout" section denoting source is at PNNL.

      NOTE: The "Source Checkout" section is completed by the person responsible for transporting the source to PNNL.

   c. When the source returns from PNNL, complete the "Source Returned" section.

4.10 Inventory of Sealed Sources

Source Custodian or Delegate

1. Ensure there are no sources checked out of storage location during the inventory cycle.

   - If a source is checked out of storage location, then ensure source is returned to storage location or arrangements are made to complete the inventory within the schedule requirements.

   - Otherwise continue.

2. Request copy of most current and approved Sealed Radioactive Source Index form (A-6004-196) from facility POC.

3. Perform a physical inventory every six months (or six months plus 30 days if scheduling problems require (see HNF-5183, Article 113.1) of each assigned accountable and exempt-quantity sealed sources. Document source inventory on TOC Radioactive Source Inventory and Accountable Source Integrity Test Record (A-6003-020). (7.1.1.h, 7.1.1.w)

   NOTE 1: Sources must be inventoried unless they are in an area that is unsafe for human entry or otherwise inaccessible. The status of the source is documented on the TOC Radioactive Source Inventory and Accountable Source Integrity Test Record (A-6003-020). (7.1.1.h, 7.1.1.o, 7.1.1.q)

NOTE 2: An interoffice memorandum to the CTA requesting exemption from inventory and integrity testing shall be prepared by the source custodian and concurrence obtained from the applicable project radiological control manager, facility POC, and CTA. A copy of the approved letter is maintained by the source custodian.

4. For sources that have NOT been exempted from inventory requirements, continue to step 5; otherwise go to Section 4.12.

5. Verify accuracy of source labeling (see Section 4.4). (7.1.1.e, 7.1.1.f)

6. Inspect the source and container for damage. (7.1.1.L)

7. Remove and replace labels that are worn or difficult to read. (7.1.1.k)

8. Document inventory completion and make appropriate changes on the TOC Radioactive Source Inventory and Accountable Source Integrity Test Record (A-6003-020) if information is not accurate. N/A the unused accountable source integrity test information for exempt-quantity sources. (If the source consists of more than one radionuclide, ensure they are accurately identified.) (7.1.1.h)

9. Review/approve inventory portion of form.

	a.	Forward form to radiological control first line manager if integrity test is not required
	b.	Go to section 4.11 if integrity test is required. Otherwise continue.
Radiological Control First Line Manager or Designee	c.	Review/approve TOC Radioactive Source Inventory and Accountable Source Integrity Test Record (A-6003-020) if integrity test is not required and return to source custodian.
Source Custodian	d.	Ensure each source is accounted for by comparing the Sealed Radioactive Source Index form (A-6004-196), provided by the facility POC, to the sources present in storage location.
	e.	If a source cannot be accounted for, go to section 4.14.
	f.	Otherwise continue.
	g.	Update and approve the Sealed Radioactive Source Index form (A-6004-196) and forward to the project radiological control manager.
Project Radiological Control Level 2 Manager/Manager	h.	Review and approve the Sealed Radioactive Source Index form (A-6004-196) and forward original to facility POC and copies to the sources custodian and CTA. (7.1.1.h)

Facility Point of Contact	i.	Maintain original Sealed Radioactive Source Index form (A-6004-196). (7.1.1.h)
Company Technical Authority	j.	Review Sealed Radioactive Source Index form (A-6004-196) and update master accountable source index for accountable source changes.

4.11 Integrity Testing Sealed Sources

NOTE 1: Tongs or other remote handling devices should be used if the extremity dose rate exceeds 500 mrem/hr (corrected reading) or the whole body dose rate exceeds 100 mrem/hr.

NOTE 2: Refer to TFC-ESHQ-RP-STD-04 for sources that can produce radiation fields equal to or greater than 100 mrem/hr at 30 cm. Radiation monitoring should be performed during and after use of such sources to verify the adequacy of controls, posting of immediate and adjacent areas, and return of the source to a safe condition.

Source Custodian

1. Ensure a source integrity test is performed on all accountable sources, except for those sources consisting solely of gaseous radioactive material or tritium, upon receipt, when damage is suspected, and at least every six months (or six months plus 30 days if scheduling problems require: see HNF-5183, Article 113.1). (7.1.1.m, 7.1.1.w)

   - Accountable sealed radioactive sources are not subject to periodic inventory and source integrity testing if that source is located in an area that is unsafe for human entry or otherwise inaccessible. (7.1.1.q)

   - If an accountable source is determined to be inaccessible for source integrity testing, implement appropriate measures to control access to the affected area and to monitor for the presence of contamination that may be spread as a result of source failure (see DOE G 441.1-1C, Chapter 15.0).

   - When the condition that resulted in an accountable source being inaccessible has been eliminated, complete the required source integrity test.

   - Accountable sources removed from service for longer than six months do not require periodic integrity testing. (7.1.1.o) Such sources shall be stored in a controlled location and subject to periodic inventory per Section 4.10 and subject to integrity testing prior to being placed back into service. (7.1.1.p)

   - The integrity of an accountable sealed radioactive source contained within a shield or device may be checked by wiping the area where contamination is most likely to occur from a failure of source integrity.

2. For accountable sources that have been exempted from integrity testing (i.e., sources that are inaccessible, in an area unsafe for human entry, or currently out of service), go to Section 4.12. Otherwise proceed to step 3.

Health Physics Technician

3. For non-electroplated sources, smear the entire surface of the sealed source and container, if accessible, with dry technical smear media.

   NOTE: Do not smear the active portion of an electroplated source.

4. For electroplated sources, smear the non-electroplated surface (e.g., back).

5. If the source cannot be removed from the container, smear the most accessible surface on the container.

   NOTE: Neutron sources are evaluated for neutron and gamma dose rates.

6. If accessible, obtain dose rates on contact and at 30 cm from the source.

7. Return source to its container.

8. Document dose rate measurements on the TOC Radioactive Source Inventory and Accountable Source Integrity Test Record (A-6003-020). (7.1.1.h)

9. Count the smear with an instrument appropriate for detecting the type(s), levels, and energies of the radiations emitted by the source (7.1.1.x); the minimum detectable activity (MDA) shall be less than 11,100 dpm. (7.1.1.n, 7.1.5)

   NOTE: Some sources emit radiation that is not easily detected by typical scaler instruments. Integrity test smears from such sources need to be counted using instruments that are capable of meeting the 11,100 dpm MDA requirements. For example, low-energy beta emitters that decay with energies below that of Tc-99 (e.g., H-3 or C-14) cannot be detected to meet the required MDA with gas proportional or Geiger-Müller detectors. Some nuclides have exotic modes of decay such as electron capture, for which the only particle emitted is a gamma photon (e.g., Cd-109). A liquid scintillation counter should be used for low-energy beta emitters, and a gamma spectrometer should be used for sources that decay by electron capture.

10. Document the integrity results on the TOC Radioactive Source Inventory and Accountable Source Integrity Test Record (A-6003-020). (7.1.1.h)

11. If activity from the integrity test is less than decision level (DL):

    a. Record alpha and beta results as N/A for activity and <DL for net counts.

    b. Forward documents to radiological control first-line management for review.

12. If the activity from the integrity test is greater than the DL:

    a. Notify the source custodian and radiological control management.

       NOTE: If the measured activity is close to the DL, a second count may be performed to assess whether the results were a false positive.

    b. Obtain and evaluate a second source integrity smear.

    c. If second smear is less than the DL, then document the integrity results on the form.

       1) Record alpha and beta results as N/A for activity and < DL for net counts.

       2) Forward documents to radiological control first-line management for review.

    d. If the second smear is greater than the DL:

       1) Notify the source custodian and radiological control management for evaluation.

       2) Control to prevent the spread of contamination.

       3) Document the integrity test results on the form.

       4) Forward documents to radiological control first line management for review.

    e. Remove source found leaking more than 11,100 dpm from service and prevent the spread of contamination:

       1) Notify the Facility POC and CTA.

       2) Complete a Radiological Survey Report in accordance with TFC-ESHQ-RP_ADM-P-09.

       3) Initiate a Problem Evaluation Request (PER) identifying the leaking source.

Radiological Control First Line Management or Designee	13. Review/approve the integrity test for accuracy and forward the document to the appropriate source custodian. (7.1.1.h)
Source Custodian	14. Maintain the original inventory and integrity test record and insert a copy of the TOC Radioactive Source Inventory and Accountable Source Integrity Test Record (A-6003-020) into the source field file. (7.1.1.h)
	15. Update and approve the Sealed Radioactive Source Index form (A-6004-196), and forward to the project radiological control manager.
Project Radiological Control Level 2 Manager/Manager	16. Review and approve the Sealed Radioactive Source Index form (A-6004-196) and forward original to facility POC and copies to the sources custodian and CTA. (7.1.1.h)
Facility Point of Contact	17. Maintain original Sealed Radioactive Source Index form (A-6004-196). (7.1.1.h)
Company Technical Authority	18. Review Sealed Radioactive Source Index form (A-6004-196) and update master accountable source index for accountable source changes.

4.12 Completing TOC Radioactive Source Inventory and Accountable Source Integrity Test Record (A-6003-020) for Sources that have been Exempted from Inventory and Integrity Testing Requirements

Source Custodian

1. Verify that the conditions used to exempt the source from inventory and integrity test requirements are still applicable.
   a. If the source is no longer inaccessible or unsafe for human entry, complete Section 4.10, steps 4 through 8 and, if applicable, Section 4.11, steps 3 through 18.
   b. Otherwise, go to step 2.
2. Record the general source information and original and current assay data under Section I on A-6003-020, "TOC Radioactive Source Inventory and Accountable Source Integrity Test Record."
3. If the source is accountable, record "N/A" in each of the boxes in Section II of A-6003-020, "TOC Radioactive Source Inventory and Accountable Source Integrity Test Record."
4. Complete Section III of A-6003-020, "TOC Radioactive Source Inventory and Accountable Source Integrity Test Record" as follows:
   a. Select "N/A" for "Integrity Test Satisfactory."
   b. Check the box "Source Unsafe for Human Entry (Inaccessible) or "Source Removed from Service," as applicable.

c. Record "N/A" in remaining fields.

5. Include the following statement in the "Remarks" field on A-6003-020, "TOC Radioactive Source Inventory and Accountable Source Integrity Test Record:"

   "This source has been exempted from inventory/integrity testing (see [document number of internal memo granting the exemption]). I certify that the conditions for this exemption continue to apply and the source has not been removed from its inaccessible location."

6. Draw a single line through the statement, "I certify the listed radioactive source is accounted for, properly labeled, storage locations/containers are properly posted, and the above information is correct," and initial and date.

RadCon First Line Manager or Designee

7. Review and approve A-6003-020, "TOC Radioactive Source Inventory and Accountable Source Integrity Test Record."

Source Custodian

8. Update and approve the Sealed Radioactive Source Index form (A-6004-196) and forward to the project radiological control manager.

Project Radiological Control Level 2 Manager/Manager

9. Review and approve the Sealed Radioactive Source Index form (A-6004-196) and forward original to facility POC and copies to the source custodian and CTA. (7.1.1.h)

10. Maintain original Sealed Radioactive Source Index form (A-6004-196). (7.1.1.h)

Company Technical Authority

11. Review Sealed Radioactive Source Index form (A-6004-196) and update master accountable source index for accountable source changes.

4.13 Removing a Source from Service

Source Custodian

1. Approve removal of a radioactive source to "out of service" status.

2. Note on the Radioactive Source Checkout Log Sheet (A-6003-019) that the source has been removed from service.

3. Update and approve the Sealed Radioactive Source Index form (A-6004-196) and forward to the project radiological control manager.

Project Radiological Control Level 2 Manager/Manager

4. Review and approve the Sealed Radioactive Source Index form (A-6004-196) and forward original to facility POC and copies to the sources custodian and CTA. (7.1.1.h)

Company Technical Authority

5. Review Sealed Radioactive Source Index form (A-6004-196) and update the master accountable source index for accountable source changes.

4.14 Source Disposal

Source Custodian	1.	Notify the Source Control CTA for assistance in identifying source transfer options.
	2.	Contact the Waste Interface to determine the appropriate disposal method and container.
	3.	Complete a Radioactive Source Disposal form (A-6003-943). (7.1.1.h)
	4.	Dispose of source. NOTE: Source is not considered disposed until physically placed into waste container.
	5.	Update and approve the Sealed Radioactive Source Index form (A-6004-196) and forward to the project radiological control manager.
Project Radiological Control Level 2 Manager/Manager	6.	Review and approve the Sealed Radioactive Source Index form (A-6004-196) and forward original to facility POC and copies to the sources custodian and CTA. (7.1.1.h)
Facility Point of Contact	7.	Maintain original Sealed Radioactive Source Index form (A-6004-196). (7.1.1.h)
Company Technical Authority	8.	Review Sealed Radioactive Source Index form (A-6004-196) and update master accountable source index for accountable source changes.

4.15 Lost Sources

All Personnel	1.	Notify the source custodian, facility POC, CTA and project radiological control manager immediately upon determining that a sealed radioactive source is missing.
Radiological Control Organization	2.	Conduct a formal search of all designated use locations, likely transfer paths, and possible collection points for the source.
	3.	Initiate a PER identifying the problem.

5.0 DEFINITIONS

Radiation generating device. A collective term for devices that produce ionizing radiation, including certain sealed sources that emit ionizing radiation, small particle accelerators used for single purpose applications which produce ionizing radiation (e.g., radiography), and electron-generating devices that produce x-rays incidentally. The term does not apply to video display terminals or other consumer products that only produce radiation considered to be background. Sealed radioactive sources that are capable of generating external radiation fields of 100 mrem/hr or greater at 30 centimeters from the accessible surface will be classified as radiation generating devices.

Source custodian delegate. Employee who is identified by management to issue accountable sources. Delegate must complete course 351529, "Source Custodian Training," prior to issuing any accountable sources.

6.0 RECORDS

The following records are generated during the performance of this procedure:

Record Description	Vital Record Y/N	QA Record Y/N	QA Record Retention L/NP	NARA Retention Schedule	Other Retention Requirements	Records Custodian
TOC Radioactive Source Inventory and Accountable Source Integrity Test Record (A-6003-020)	N	Y	L	ADM-17.32a	N/A	Source Custodian
Designation of Source Custodian (A-6003-939)	N	Y	L	ADM-17.32a	N/A	Source Custodian
TOC Radioactive Source Disposal Form (A-6003-943)	N	Y	L	ADM-17.32a	N/A	Source Custodian
TOC Radioactive Source Transfer From (A-6003-940)	N	Y	L	ADM-17.32a	N/A	Source Custodian
TOC Radioactive Source Checkout Log Sheet (A-6003-019)	N	N	N/A	ADM-1.21.3g1b	N/A	Source Custodian
Interoffice Memorandum Inventory and Integrity Test Exemption Request	N	Y	L	ADM-1.21.32a	N/A	Facility/Project Radiological Control Point of Contact
Birth Certificate (Manufacturer Certificate)	N	Y	L	ADM-17.32a	N/A	Source Custodian
External letter documenting source transfers to another on-site company	N	Y	L	ADM-17.32a	N/A	Facility/Project Radiological Control Point of Contact
Sealed Radioactive Source Index Form (A-6004-196)	N	Y	L	ADM-17.32a	N/A	Facility/Project Radiological Control Point of Contact

The identified record custodian is responsible for record management in accordance with TFC-BSM-IRM_DC-C-02.

7.0 SOURCES

7.1 Requirements

1. HNF-MP-5184, "CH2M HILL Hanford Group Inc. Radiation Protection Program."
   a. Requirement #38, 835.103.
   b. Requirement #100, 835.405(b)(1).
   c. Requirement #101, 835.405(b)(2).
   d. Requirement #105, 835.405(d).
   e. Requirement #148, 835.605.
   f. Requirement #149, 835.605.
   g. Requirement #156, 835.606(b).
   h. Requirement #189, 835.704(f).
   i. Requirement #235, 835.1201.
   j. Requirement #236, 835.1202(a)(1).
   k. Requirement #237, 835.1202(a)(2).
   l. Requirement #238, 835.1202(a)(3).
   m. Requirement #239, 835.1202(b).
   n. Requirement #240, 835.1202(b).
   o. Requirement #241, 835.1202(c).
   p. Requirement #242, 835.1202(c).
   q. Requirement #243, 835.1202(d).
   r. Requirement #244, 835.1202(e).
   s. Requirement #278, 835, Appendix E.1.
   t. Requirement #279, 835, Appendix E.2.
   u. Requirement #280, 835, Appendix E.3.
   v. Requirement #151, 835.606(a)(2).
   w. Requirement #20, 835.3(e).
   x. Requirement #77, 835.401(b)(2).

2. PER-2005-1000.

3. TFC-0610-FACT-0069, "Cancel TFC-TBD-0069, Radiation Detectors with Internal Sources Need to be Controlled."

4. TFC-0612-FACT-0075, "Locking Requirements and Alternative Controls to Prevent Unauthorized Use of Radioactive Sealed Sources."

5. CH2M-PER-2008-1569.

6. WRPS-PER-2009-0213.

7.2 References

1. DOE G 441.1-1C, Chapter 15.0, "Sealed Radioactive Source Accountability and Control."

2. HNF-5183, "Tank Farm Radiological Control Manual (TFRCM)."

3. TFC-BSM-CP_CPR-C-06, "Procurement of Items (Materials)."

4. TFC-BSM-IRM_DC-C-02, "Records Management."

5. TFC-BSM-TQ_MGT-C-04, "Training Records Administration."

6. TFC-ESHQ-RP_ADM-P-09, "Documentation of Radiological Surveys."

7. TFC-ESHQ-RP-STD-04, "Controlling Radiation Generating Devices."

8. TFC-TBD-0028, "Requirements for Uranium Check Sources Used in the GM Survey Instrument."

9. "Nuclides and Isotopes: Chart of the Nuclides," 16th Ed., Lockheed Martin (2002).

10. WRPS-PER-2008-0382.

11. WRPS-PER-2009-0213.

Figure 1. Sealed Source Flowchart.

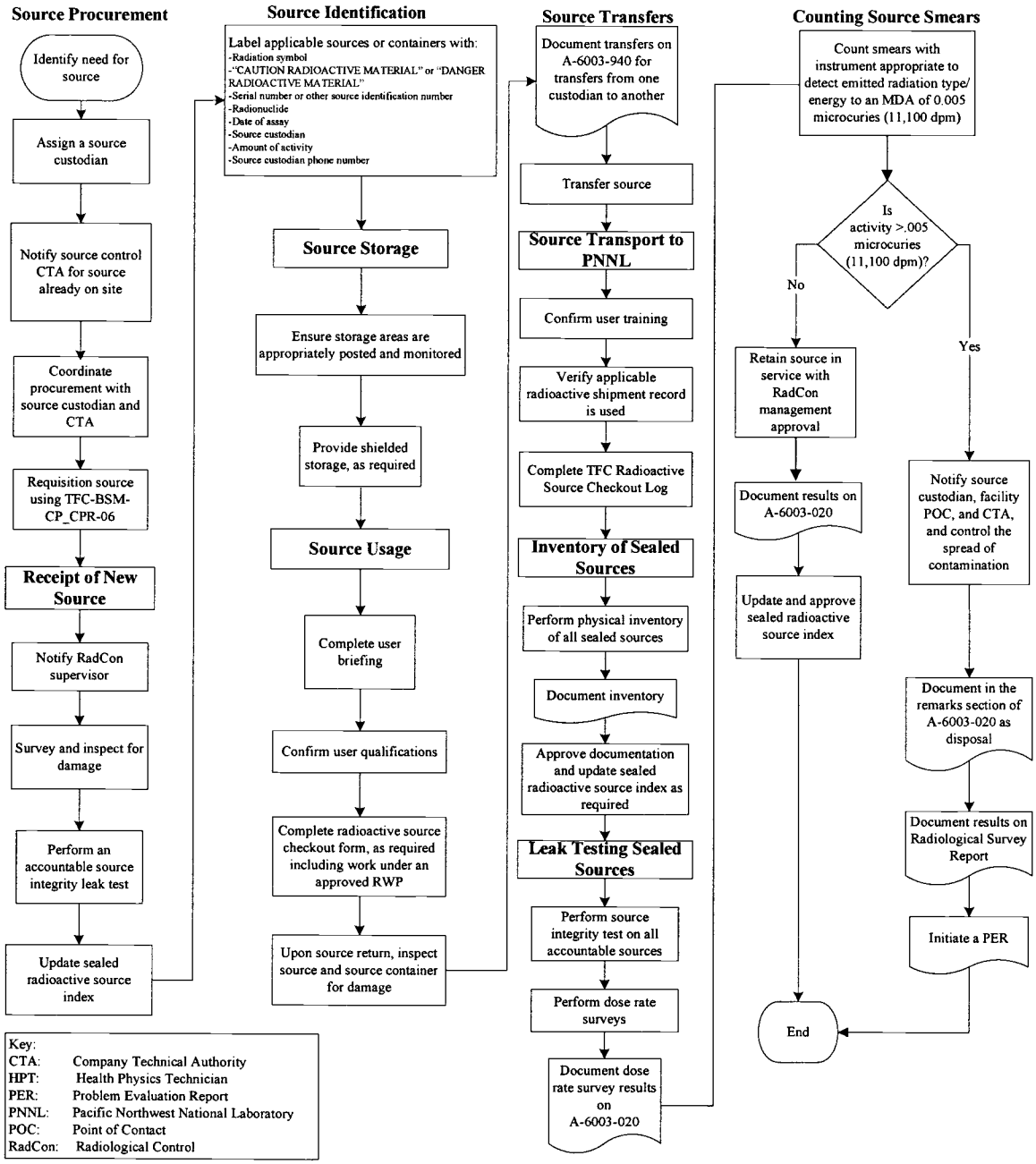

Message

From: Hanni, Jonathan B

Sent: Monday, May 11, 2009 2:41 PM

To: ^WRPS Corrective Action Group

Subject: Re: Extension Request for (WRPS-PER-2008-0009.1) PERs associated with A-08-ESQ-TANKFARM-010

Should be 2008-0029 and the other one should be 2008-0009.

From: ^WRPS Corrective Action Group
To: Hanni, Jonathan B; ^WRPS Corrective Action Group; Rolph, James T; Livesey, Lee M
Sent: Mon May 11 13:56:05 2009
Subject: RE: Extension Request for PERs associated with A-08-ESQ-TANKFARM-010

WRPS-PER-2009-0029 is a PIE w/one corrective action that is closed. Is this the correct number?

Thanks...As always, please call if you have questions

Linda RB Glaman
Operations Support Specialist/CAM
376-1776/376-6249
2750E/A-208/R2-87
"The only stupid question is the one that remains unasked"

From: Hanni, Jonathan B
Sent: Monday, May 11, 2009 11:02 AM
To: ^WRPS Corrective Action Group
Subject: Re: Extension Request for PERs associated with A-08-ESQ-TANKFARM-010

Yes.

From: ^WRPS Corrective Action Group
To: Rolph, James T; ^WRPS Corrective Action Group; Hanni, Jonathan B; Livesey, Lee M
Sent: Mon May 11 10:55:47 2009
Subject: RE: Extension Request for PERs associated with A-08-ESQ-TANKFARM-010

Am I to conclude that the request to extend the following PERs are actually for the corrective action launched for each one?
WRPS-PER-2008-0382
WRPS-PER-2008-0024
CH2M-PER-2008-1569

Thanks...As always, please call if you have questions

Linda RB Glaman

Operations Support Specialist/CAM
376-1776/376-6249
2750E/A-208/R2-87
"The only stupid question is the one that remains unasked"

From: Rolph, James T
Sent: Thursday, May 07, 2009 3:45 PM
To: ^WRPS Corrective Action Group; Hanni, Jonathan B
Subject: RE: Extension Request for PERs associated with A-08-ESQ-TANKFARM-010

Please change the due date of the following PERs to May 14, 2009:
WRPS-PER-2008-0382 is a PIE/CIM that corresponds to A-08-ESQ-TANKFARM-010-O02 and requires a procedure change to TFC-ESHQ-RP_MON-C-24, "Sealed Radioactive Source Accountability and Control."

WRPS-PER-2008-0024 is a PIE/CIM that corresponds to A-08-ESQ-TANKFARM-010-O03 and requires a procedure change to TFC-ESHQ-RP_MON-C-24, "Sealed Radioactive Source Accountability and Control."

Please extend the following to July 15th, 2009:
CH2M-PER-2008-1569, WRPS-PER-2009-0009, WRPS-PER-2009-0029, and WRPS-PER-2009-0213)

Thanks,
Jim

From: ^WRPS Corrective Action Group
Sent: Thursday, May 07, 2009 1:43 PM
To: Hanni, Jonathan B; Rolph, James T; ^WRPS Corrective Action Group
Subject: RE: Extension Request for PERs associated with A-08-ESQ-TANKFARM-010

Which PER(s)? There are several referenced in the email chain below.

Thanks...As always, please call if you have questions
Linda RB Glaman
Operations Support Specialist/CAM
376-1776/376-6249
2750E/A-208/R2-87
"The only stupid question is the one that remains unasked"

From: Hanni, Jonathan B
Sent: Thursday, May 07, 2009 1:30 PM
To: Rolph, James T; ^WRPS Corrective Action Group
Cc: Glaman, Linda
Subject: RE: Extension Request for PERs associated with A-08-ESQ-TANKFARM-010

Jim,

We will not have the procedure change completed by May 14th. I will have it submitted into the workflow process by COB tomorrow, but it will take at least a few weeks to go through the procedure change process. I am working on getting the status on the rest of the PERs in the CAP so I can provide ORP with a summary of our progress.

Jonathan B. Hanni
Radiological Controls
2750E/C-108/200 East, MSIN: R1-05
Office: 509-373-4017, Cell: 509-619-3568
Fax: 509-372-3522
washington**river**
protection*solutions*

From: Rolph, James T
Sent: Thursday, May 07, 2009 1:24 PM
To: ^WRPS Corrective Action Group
Cc: Hanni, Jonathan B; Glaman, Linda
Subject: RE: Extension Request for PERs associated with A-08-ESQ-TANKFARM-010

Please extend the referenced PER to May 14th per this email request.
Jim

From: Glaman, Linda
Sent: Thursday, May 07, 2009 7:50 AM
To: Rolph, James T; Hanni, Jonathan B
Subject: RE: Extension Request for PERs associated with A-08-ESQ-TANKFARM-010

please send ^WRPS Corrective Action Group an email with the finalized extension request.

Thanks...As always, please call if you have questions

Linda RB Glaman
Operations Support Specialist/CAM
376-1776/376-6249
2750E/A-208/R2-87
"The only stupid question is the one that remains unasked"

From: Rolph, James T
Sent: Tuesday, May 05, 2009 12:12 PM
To: Armstrong, Jason A; Hanni, Jonathan B
Cc: Maciuca, Constantin; Glaman, Linda; Brown, Nancy L; Hoar, Kenneth A; Jansons, Richard S; Beranek, Fred
Subject: RE: Extension Request for PERs associated with A-08-ESQ-TANKFARM-010

Jason,
I appreciate your observation and commitments. We are fully staffed now and are making good progressing in training and qualifications so I see us improving in this area as well as other in the near future. Your proposal is

generous and we will act on it. We'll discuss also at Thursday's meeting.
Kind regards,
Jim

From: Armstrong, Jason A
Sent: Tuesday, May 05, 2009 8:51 AM
To: Hanni, Jonathan B; Rolph, James T
Cc: Maciuca, Constantin; Glaman, Linda; Brown, Nancy L; Hoar, Kenneth A; Jansons, Richard S
Subject: RE: Extension Request for PERs associated with A-08-ESQ-TANKFARM-010

Thanks John for the email.

I am somewhat perplexed. Looking at the CAP that WRPS submitted to ORP for the subject assessment, it has a due date of 1/31/2008 for Observations 2 and 3. I believe that the CAP should have stated 1/31/2009. However, after examining the below referenced PERs, it has a due date of 3/31/2009 for the same observations.

My proposal:

1 – WRPS look at all commitments in the CAP for the subject assessment. Respond back to ORP (via email is fine) with the status of each commitment.
2 – Commit by May 14, 2009 to have all the procedure changes completed.
3 – On September 14, 2009, commit to have completed an effectiveness review of the subject procedure changes.

Jim,

I don't have a lot of data to go on, however, I am seeing a trend that WRPS RadCon is missing due dates in regards to ORP commitments. My expectation is that a requests for extensions be minimal and always before the due date. I understand that you are organization is busy, however, I rely on WRPS managing its assurance systems.

Thanks,

Jason Armstrong, CHP, RRPT
DOE - Office of River Protection
Phone: 509-372-0787
Cell: 509-438-9321
jason_a_armstrong@orp.doe.gov

From: Hanni, Jonathan B
Sent: Monday, May 04, 2009 4:48 PM
To: Jansons, Richard S
Cc: Armstrong, Jason A; Rolph, James T; Maciuca, Constantin; Glaman, Linda; Brown, Nancy L
Subject: Extension Request for PERs associated with A-08-ESQ-TANKFARM-010

Rick,

Due to competing priorities, several PERs that resulted from ORP Assessment A-08-ESQ-TANKFARM-010 are past

due. I would like to extend the deadlines for these PERs, and I will need ORP's blessing to do so as the corrective actions were committed to ORP in our CAP (see WRPS-0802829_R1 Enclosure). The PERs in question are:

WRPS-PER-2008-0382 is a PIE/CIM that corresponds to A-08-ESQ-TANKFARM-010-O02 and requires a procedure change to TFC-ESHQ-RP_MON-C-24, "Sealed Radioactive Source Accountability and Control."

WRPS-PER-2008-0024 is a PIE/CIM that corresponds to A-08-ESQ-TANKFARM-010-O03 and requires a procedure change to TFC-ESHQ-RP_MON-C-24, "Sealed Radioactive Source Accountability and Control."

I have also been assigned four other PERs that require changes to TFC-ESHQ-RP_MON-C-24, but they were not specifically called out in the CAP for A-08-ESQ-TANKFARM-010 (see CH2M-PER-2008-1569, WRPS-PER-2009-0009, WRPS-PER-2009-0029, and WRPS-PER-2009-0213). These PERs also drive changes to TFC-ESHQ-RP_MON-C-24. I propose extending the deadlines for all of these PERs to 7/15/2009 to ensure they are completed effectively. The procedure changes should be incorporated and the workflow initiated within a couple weeks, and the remaining time will ensure that the procedure change workflow can be completed and any training established to cover the changes to the procedure.

Thanks,

Jonathan B. Hanni
Radiological Controls
2750E/C-108/200 East, MSIN: R1-05
Office: 509-373-4017, Cell: 509-619-3568
Fax: 509-372-3522
washington**river**
protection*solutions*

Save

Problem Evaluation Request (PER)

WRPS-PER-2009-1010
In Process/Work

PER No	Date of Discovery	Time of Discovery (24:00)	Project
WRPS-PER-2009-1010	05/21/2009	15:45	ATS/222-S

Location

222S

How Was Problem Discovered

Assessment

Description of Concern or Problem

A management assessment of the Industrial Hygiene (IH) Program within the Analytical Process Development (APD) organization of WRPS was performed during April and May 2009. The results of the assessment indicate the program is meeting the needs of the customer in terms of both quality and timeliness. The assessment resulted in no findings and one observation.

Observation 1: Review staffing for support of the Vapor IH program, including enough resources to finish method development in a timely manner, routinely review control charts, and upload data to the Tank Farm Industrial Hygiene (TFIH) database.

Requirement Not Satisfied	Source Document Number

Equipment Identification Number	System Identification
N/A	

Immediate actions Taken or Planned

None

Recommended Corrective actions

Recommend a PIE/CIM to Kathleen Hall

Originator Contact

No

Originators Name	Originators ID	Originators Phone	Date Initiated
Hall, Kathleen M	H0068436	(509) 376-5029	05/21/2009

SHIFT OPERATIONS REVIEW

Title

Review Staffing for Support of the Vapor IH Program

How Discovered	Agency
self-ID prior to event	

Reportability	SSC Operability	Operability Review	Comp Measures Req
Non-Reportable	N/A	N/A	

Describe actions Taken or Recommended

No additional actions recommended.

SO Reviewer Name	SO Reviewer ID	SO Reviewer Phone	SO Review Date
Brey, Steve L	H0062556	(509) 373-2960	05/22/2009

SCREENING

PER Significance Level	
PIE/CIM	

Independent Assessment Review	Occurrence Report Number	Externally Identified	
No		No	

Assigned Responsible	Facilities Rep / SSO	Safety Management Rep	

Manager			
Hall, Kathleen M			
Program		**Safety Management Program**	
• N/A		• Industrial Hygiene	
PER Screening Comments			
No comments (Nancy Brown 05/26/09)			
Causal Code			
MGT/Comm/Train	**Human Performance**	**GEMS**	**Equip/Eng/Other**
Failed Barrier	**ORPS Code**	**Functional Area**	**Work Process**
	Not Applicable	Occupational Safety and Health	• IH Monitoring • Vapor/Odor Reporting
ISMS	**Consequence Code**		
Identify and analyze hazards	• Resource Allocation, Organizational Structure - Inadequate staffing/Organizational structure not defined		
PER Screening Chair	**PER Screening Chair ID**	**PER Screening Chair Phone**	**PER Screening Date**
Brown, Nancy L	H0088797	(509) 373-0992	05/26/2009
PAAA REVIEW			
PAAA Screening	**PAAA Codes**	**Function Codes**	
Not subject to PAAA			
NTS Report Number	**NTS Report Date**		
Repetitive / Recurrent	**Programmatic**	**Intentional Violation / Misrepresentation**	
No	No	No	
PAAA Screening Comments			
PAAA Reviewer Name	**PAAA Review Date**		
Anderson, Craig E	05/26/2009		
PAAA Approver Name	**PAAA Approve Date**		
Anderson, Craig E	05/27/2009		
SENIOR MANAGEMENT REVIEW/CONCURRENCE			
TF Operations Morning Leadership Call			
N/A			
Instructions for Responsible Manager			
Evaluate suggestion, enter comments and required actions on PIE/CIM tab of the PER. Disposition in accordance with TFC-ESHQ-Q_C-C-01, Problem Evaluation Request.			
Senior Management	**Sr Mgmt ID**	**Sr Mgmt Phone**	**Sr Mgmt Review Date**
Brown, Nancy L	H0088797	(509) 373-0992	05/27/2009
CAUSE ANALYSIS			
Description of Occurrence			
Extent of Condition			

Safety Significance

Generic Implications

Remedial Corrective Action

Causal Analysis, Apparent Cause and/or Root Cause Analysis

PIE/CIM

Evaluation of PIE/CIM Initiative

Trained and qualified Technical resources are required to support the WRPS IH program. The intention a year ago was to transfer the VOA and SVOA analyses to the ASPC at the 222-S laboratory. A prerequisite for the transfer of work was for the ASPC to become AIHA certified to perform the analyses. This certification was completed; however, the techniques required for performance of the methods are demanding and achievable only by certain staff. The technique required is a spiking technique that only certain individuals are capable of performing. In addition, there is no repeat analysis possible on IH samples. Once the sample is analyzed it is not possible to do it over. This drives the requirement to use specified staff to perform the analyses who have the capability, experience, and technique to correctly perform the work.
WRPS currently has 2 chemists and one engineering technician trained and qualified to perform the IH VOA and SVOA analyses. While the sample load has been relatively low, the program recently requested development of methods for analysis of approximately 20 additional compounds along with review of C farm data from several years ago. If WRPS is to retain the VOA and SVOA analytical work and also perform method development additional resources will need to be obtained. A contract has been placed to add a full time chemist to this staff for method development along with a temporary chemist to perform the data review.
The staffing for electronic upload of data to the TFIH requires a chem tech trained as a sample custodian. This resource will be supplemented using a contract for Chem Tech support from the ASPC. The contract for chem tech support is held by the WRPS 222-S Facility Operations group. The facility manager has agreed to allow sample custodian chem techs to be procured under this contract when needed.

No further actions are necessary.

ATTACHMENTS

Link to PER

AUDIT HISTORY

Change Date	Auditor	Comments
05/27/2009 10:45	Brown, Nancy L	Responsible Manager Task Launched by Brown, Nancy L

-- End of Report --
07/09/2009 05:06 PM

Task# WRPS-PER-2009-1010

E-STARS[R] Report
Task Detail Report
07/09/2009 1706

TASK INFORMATION			
Task#	WRPS-PER-2009-1010		
Subject	PIE; Review Staffing for Support of the Vapor IH Program		
Parent Task#		**Status**	Open
Reference		**Due**	07/20/2009
Originator	^PER Coordinator	**Priority**	Medium
Originator Phone		**Category**	PER
Origination Date	05/21/2009 1601	**Generic1**	None
Remote Task#		**Generic2**	None
Deliverable	PER Review	**Generic3**	None
Class	None	**View Permissions**	Global
Instructions	*No Instructions*		

ROUTING LISTS

1	Responsible Manager	Active
	Evaluate suggestion, enter comments and required actions on PIE/CIM tab of the PER. Disposition in accordance with TFC-ESHQ-Q_C-C-01, Problem Evaluation Request.	
	• Hall, Kathleen M - Assign - Awaiting Response - Due Date - 07/20/2009 1630 *Instructions:*	
2	Review Initial PER	Inactive
	Review New PER	
	• ^SO(Brey, Steve L) - Review - Concur - 05/22/2009 0916 *Instructions:*	
	• ^PER Screening(Brown, Nancy L) - Review - Concur - 05/26/2009 1459 *Instructions:*	
	• ^Mgr Review - Review - Cancelled - 05/27/2009 1045 *Instructions:*	

ATTACHMENTS

Attachments	1. Link to PER

COMMENTS

No Comments

TASK DUE DATE HISTORY

Modified	05/27/2009 1045 - ^PER Coordinator	**New Due Date**	07/20/2009 1630
Modified	05/27/2009 1045 - ^PER Coordinator	**New Due Date**	07/20/2009 1630
Modified	05/21/2009 1601 - ^PER Coordinator	**New Due Date**	05/23/2009 1630

SUB TASK HISTORY

No Subtasks

-- end of report --

Save

Problem Evaluation Request (PER)

WRPS-PER-2009-1012
In Process/Work

PER No	Date of Discovery	Time of Discovery (24:00)	Project
WRPS-PER-2009-1012	05/22/2009	09:00	Engineering

Location

Admin Facilities

How Was Problem Discovered

Assessment

Description of Concern or Problem

TFC-ENG-SB-C-03, REV D-5, Unreviewed Safety Question Process, discusses an Annual USQ Summary Report but it is not listed in the records table.

Requirement Not Satisfied	Source Document Number
4.1 Verify that the procedure for the work activity being performed correctly identifies record, or quality assurance record.	TFC-BSM-IRM_DC-C-02

Equipment Identification Number	System Identification
None	

Immediate actions Taken or Planned

None

Recommended Corrective actions

Revise the procedure to add the Annual USQ Summary Report to the records section of the procedure.

Originator Contact

I would like to review the the corrective actions at closure to ensure they were effective

Originators Name	Originators ID	Originators Phone	Date Initiated
Lesko, Andrew C	H0128283	(509) 372-9172	05/22/2009

SHIFT OPERATIONS REVIEW

Title

TFC-ENG-SB-C-03, REV D-5, Unreviewed Safety Question Process Procedure Deficiency

How Discovered	Agency
self-ID prior to event	

Reportability	SSC Operability	Operability Review	Comp Measures Req
Non-Reportable	N/A	N/A	

Describe actions Taken or Recommended

No additional actions taken or recommended by BO SM.

SO Reviewer Name	SO Reviewer ID	SO Reviewer Phone	SO Review Date
Malhan, Rakesh	H0046812	(509) 373-2689	05/22/2009

SCREENING

PER Significance Level	
PIE/CIM	

Independent Assessment Review	Occurrence Report Number	Externally Identified	
No		No	

Assigned Responsible Manager	Facilities Rep / SSO	Safety Management Rep	
Eppler, Larry L			

Program	Safety Management Program
• N/A	• Nuclear Criticality Safety

PER Screening Comments

No comments
(Nancy Brown 05/26/09)

Causal Code			
MGT/Comm/Train	**Human Performance**	**GEMS**	**Equip/Eng/Other**
Failed Barrier	**ORPS Code**	**Functional Area**	**Work Process**
	Not Applicable	Nuclear Safety & Licensing	• Procedures: Implementation, Compliance
ISMS	**Consequence Code**		
Provide feedback and continuous improvement	• Procedure - Administrative - Procedure ambiguous, in error, could not be worked, was not used		
PER Screening Chair	**PER Screening Chair ID**	**PER Screening Chair Phone**	**PER Screening Date**
Brown, Nancy L	H0088797	(509) 373-0992	05/26/2009

PAAA REVIEW

PAAA Screening	PAAA Codes	Function Codes	
PAAA, Non-NTS Reportable	• 10 CFR 830.122 (d)(1)	• Procedure Quality	
NTS Report Number	**NTS Report Date**		
Repetitive / Recurrent	**Programmatic**	**Intentional Violation / Misrepresentation**	
No	No	No	

PAAA Screening Comments

PAAA Reviewer Name	PAAA Review Date	
Anderson, Craig E	05/26/2009	
PAAA Approver Name	**PAAA Approve Date**	
Anderson, Craig E	05/27/2009	

SENIOR MANAGEMENT REVIEW/CONCURRENCE

TF Operations Morning Leadership Call

N/A

Instructions for Responsible Manager

Evaluate suggestion, enter comments and required actions on PIE/CIM tab of the PER. Disposition in accordance with TFC-ESHQ-Q_C-C-01, Problem Evaluation Request.

Senior Management	Sr Mgmt ID	Sr Mgmt Phone	Sr Mgmt Review Date
Brown, Nancy L	H0088797	(509) 373-0992	05/27/2009

CAUSE ANALYSIS

Description of Occurrence

Extent of Condition

Safety Significance

Generic Implications

Remedial Corrective Action

Causal Analysis, Apparent Cause and/or Root Cause Analysis
PIE/CIM
Evaluation of PIE/CIM Initiative
ATTACHMENTS
DUE DATE EXTENSION FOR WRPS-PER-2009-1012.msg
Link to PER

AUDIT HISTORY

Change Date	Auditor	Comments
05/27/2009 10:47	Brown, Nancy L	Responsible Manager Task Launched by Brown, Nancy L

-- End of Report --
07/09/2009 05:07 PM

Task# WRPS-PER-2009-1012

E-STARS[R] Report
Task Detail Report
07/09/2009 1707

TASK INFORMATION			
Task#	WRPS-PER-2009-1012		
Subject	PIE; TFC-ENG-SB-C-03, REV D-5, Unreviewed Safety Question Process Procedure Deficiency		
Parent Task#		**Status**	Open
Reference		**Due**	10/04/2009
Originator	^PER Coordinator	**Priority**	Medium
Originator Phone		**Category**	PER
Origination Date	05/22/2009 0926	**Generic1**	None
Remote Task#		**Generic2**	None
Deliverable	PER Review	**Generic3**	None
Class	None	**View Permissions**	Global
Instructions	*No Instructions*		

ROUTING LISTS

1	Responsible Manager	Active
	Evaluate suggestion, enter comments and required actions on PIE/CIM tab of the PER. Disposition in accordance with TFC-ESHQ-Q_C-C-01, Problem Evaluation Request.	
	• Eppler, Larry L - Assign - Delegated - 06/15/2009 0928 *Instructions:* ↳ *Routing List:* Route List - Active *Instructions:* • Kozlowski, Stephen D - Assign - Awaiting Response • Williams, Char - Assign - Awaiting Response	
	• Eppler, Larry L - Assign - Withdrawn - 07/08/2009 0935 *Instructions:* Did you contact the originator about the PER? Document your contact in the response window.	
2	Review Initial PER	Inactive
	Review New PER	
	• ^SO(Malhan, Rakesh) - Review - Concur - 05/22/2009 1453 *Instructions:*	
	• ^PER Screening(Brown, Nancy L) - Review - Concur - 05/26/2009 1503 *Instructions:*	
	• ^Mgr Review - Review - Cancelled - 05/27/2009 1047 *Instructions:*	

ATTACHMENTS

Attachments	1. DUE DATE EXTENSION FOR WRPS-PER-2009-1012.msg 2. Link to PER

COMMENTS

Poster	^PER Coordinator (Glaman, Linda R) - 07/08/2009 0937
	extend to 9-30-09 per attached email request. LBG 7-8-09
	The recommended corrective action in WRPS-PER-2009-1012 is being addressed in a revision

Task# WRPS-PER-2009-1012

	to TFC-ENG-SB-C-03, "Unreviewed Safety Question Process," which makes also several other changes to the procedure. The draft revision is currently being developed by Nuclear Safety. Additional time is required to complete the changes and obtain DOE's approval of the revised procedure. Requested Revised Due Date: 9/30/09 C Williams for L Eppler 7-2-09

TASK DUE DATE HISTORY

Modified	07/08/2009 0935 - ^PER Coordinator (Glaman, Linda R)	**New Due Date**	10/04/2009 1630
Modified	05/27/2009 1047 - ^PER Coordinator	**New Due Date**	07/21/2009 1630
Modified	05/27/2009 1047 - ^PER Coordinator	**New Due Date**	07/21/2009 1630
Modified	05/22/2009 0926 - ^PER Coordinator	**New Due Date**	05/24/2009 1630

SUB TASK HISTORY

No Subtasks

-- end of report --

Message

From: Williams, C J (Char)
Sent: Thursday, July 02, 2009 3:34 PM
To: ^WRPS Corrective Action Group
Cc: Williams, C J (Char)
Subject: DUE DATE EXTENSION FOR WRPS-PER-2009-1012

WRPS-PER-2009-1012 (due 7/31/09) describes the following concern or problem:

"TFC-ENG-SB-C-03, REV D-5, Unreviewed Safety Question Process, discusses an Annual USQ Summary Report but it is not listed in the records table."

The PER proposes the following recommended corrective action:

"Revise the procedure to add the Annual USQ Summary Report to the records section of the procedure"

I would like to extend WRPS-PER-2009-1012 for the following reason:

The recommended corrective action in WRPS-PER-2009-1012 is being addressed in a revision to TFC-ENG-SB-C-03, "Unreviewed Safety Question Process," which makes also several other changes to the procedure. The draft revision is currently being developed by Nuclear Safety. Additional time is required to complete the changes and obtain DOE's approval of the revised procedure.

Requested Revised Due Date: 9/30/09

Char Williams
Nuclear Safety, USQ Support
Phone: 376-3101 Cell: 438-9120
Fax: 376-2133

Save

Problem Evaluation Request (PER)

WRPS-PER-2009-1084
Closed 06/05/2009 10:15

PER No	Date of Discovery	Time of Discovery (24:00)	Project
WRPS-PER-2009-1084	06/01/2009	11:20	Radcon-BO

Location

272AW

How Was Problem Discovered

Routine Work

Description of Concern or Problem

Work Order TFC-WO-08-2993 found air sampler 272AS019 (AS019) to be contaminated, were unable to calibrate and obtain as found values, and recommened that AS019 be permanently removed from service.

Requirement Not Satisfied	Source Document Number

Equipment Identification Number	System Identification

Immediate actions Taken or Planned

RadCon notified, AS019 disposed of as low level radioactive waste, and PER initiated to evaluate possible use of AS019 in an un-calibrated status.

Evaluation Performed:
AS019 was last calibrated on 3/3/2008 according to provided work order paperwork. The Base Ops RadCon sample receipt log was reviewed for the period from the last AS005 calibration to December 2008; a period greater than the 180 day calibration period. AS019 was found to not have been used during this period. As AS019 was not used during the period of time it could have had impact on any air sample's MDC, DAC fraction, activity, or DL. Therefore, no sample counting documentation changes are required, no field changes are required, and there is no impact on external/internal dosimetry records. No further evaluation is required or necessary at this time.

Recommended Corrective actions

It is recommended that this PER be assigned to Base Ops RadCon as Trend Only.

Originator Contact

Please call if you have specific questions.

Originators Name	Originators ID	Originators Phone	Date Initiated
Bickel, Eric E	H3764153	(509) 372-1470	06/01/2009

SHIFT OPERATIONS REVIEW

Title

TFC-WO-08-2993 found air sampler 272AS019 (AS019) to be contaminated, were unable to calibrate and obtain as found values

How Discovered	Agency
self-ID prior to event	

Reportability	SSC Operability	Operability Review	Comp Measures Req
Non-Reportable	N/A	N/A	

Describe actions Taken or Recommended

No immediate BO SO actions identified since air sampler wasn't used during the period in question.

SO Reviewer Name	SO Reviewer ID	SO Reviewer Phone	SO Review Date
Wallgren, Carl B	H0099480	(509) 373-2689	06/01/2009

SCREENING

PER Significance Level			
Trend Only			
Independent Assessment Review	**Occurrence Report Number**	**Externally Identified**	

No		No	
Assigned Responsible Manager	**Facilities Rep / SSO**	**Safety Management Rep**	
Brannan, Patrick (Brad)			
Program		**Safety Management Program**	
• N/A		• Radiological Control	

PER Screening Comments

Has the instrument been removed from service?
(Nancy Brown 06/02/09)

RE-SCREEN REQUEST (Prior to Launch): PER 2009-1084 was assigned to Base Ops RadCon as a TUF vice a Trend Only. The question was raised by the screening committee as to whether or not AS-019 was disposed of or in service. In the PER's Immediate Actions Taken section, it is already stated that AS019 was disposed of as low level rad waste. Therefore, the screening committee's question has already been resolved and PER 2009-1084 should be re-screened as Trend Only to Base Ops RadCon.
(Eric Bickel 06/03/09)

RE-SCREEN COMMENTS: Change from TUF to Trend Only.
(Nancy Brown 06/04/09)

Causal Code

MGT/Comm/Train	**Human Performance**	**GEMS**	**Equip/Eng/Other**
Failed Barrier	**ORPS Code**	**Functional Area**	**Work Process**
	Not Applicable	Radiation Protection	• Radiological Instrumentation
ISMS	**Consequence Code**		
Perform work within the controls	• Rad Inst - Contaminated - Contamination found on radiological instrument		
PER Screening Chair	**PER Screening Chair ID**	**PER Screening Chair Phone**	**PER Screening Date**
Brown, Nancy L	H0088797	(509) 373-0992	06/02/2009

PAAA REVIEW

PAAA Screening	**PAAA Codes**	**Function Codes**	
Not subject to PAAA			
NTS Report Number	**NTS Report Date**		
Repetitive / Recurrent	**Programmatic**	**Intentional Violation / Misrepresentation**	
No	No	No	

PAAA Screening Comments

PAAA Reviewer Name	**PAAA Review Date**	
Anderson, Craig E	06/02/2009	
PAAA Approver Name	**PAAA Approve Date**	
Anderson, Craig E	06/03/2009	

SENIOR MANAGEMENT REVIEW/CONCURRENCE

TF Operations Morning Leadership Call

N/A

Instructions for Responsible Manager

Senior Management	**Sr Mgmt ID**	**Sr Mgmt Phone**	**Sr Mgmt Review Date**
Brown, Nancy L	H0088797	(509) 373-0992	06/05/2009

ATTACHMENTS
Link to PER
WRPS-2009-1084 Support Docs.pdf

AUDIT HISTORY

Change Date	Auditor	Comments
06/03/2009 09:34	Brown, Nancy L	'Selected Consequence Codes' have changed.
06/03/2009 09:47	Brown, Nancy L	'PER Screening Comments' was changed.
06/04/2009 12:12	Brown, Nancy L	'PER Significance Level' was changed from TUF to Trend Only. 'PER Screening Comments' was changed.

-- End of Report --
06/05/2009 10:15 AM

Task# WRPS-PER-2009-1084			
E-STARS[R] Report Task Detail Report 06/05/2009 1015			
TASK INFORMATION			
Task#	WRPS-PER-2009-1084		
Subject	TREND; TFC-WO-08-2993 found air sampler 272AS019 (AS019) to be contaminated, were unable to calibrate and obtain as found values		
Parent Task#		Status	CLOSED 06/05/2009
Reference		Due	06/03/2009
Originator	^PER Coordinator	Priority	Medium
Originator Phone		Category	PER
Origination Date	06/01/2009 1134	Generic1	None
Remote Task#		Generic2	None
Deliverable	PER Review	Generic3	None
Class	None	View Permissions	Global
Instructions	*No Instructions*		
ROUTING LISTS			
1	Review Initial PER		Inactive
	Review New PER		
	• ^SO(Wallgren, Carl B) - Review - Concur - 06/01/2009 1638 *Instructions:*		
	• ^PER Screening(Brown, Nancy L) - Review - Concur - 06/02/2009 1608 *Instructions:*		
	• ^Mgr Review - Review - Withdrawn - 06/03/2009 0947 *Instructions:*		
	• ^PER Screening(Brown, Nancy L) - Review - Concur - 06/04/2009 1356 *Instructions:*		
	• ^Mgr Review(Brown, Nancy L) - Review - Concur - 06/05/2009 0954 *Instructions:*		
ATTACHMENTS			
Attachments	1. Link to PER 2. WRPS-2009-1084 Support Docs.pdf		
COMMENTS			

Task# WRPS-PER-2009-1084			
No Comments			
TASK DUE DATE HISTORY			
Modified	06/01/2009 1134 - ^PER Coordinator	New Due Date	06/03/2009 1630
SUB TASK HISTORY			
No Subtasks			
-- end of report --			

WRPS 2009-1087
Support Doc's

Bickel, Eric E

From: Jackson, Gary L
Sent: Thursday, April 16, 2009 9:03 AM
To: Bickel, Eric E
Subject: RE: 272AS019 RADECO. Contaminated, cannot cal.

Eric, Radico is 272AS019
The packsge is WDL-111981.
Work Order is TFC-WO-08-2993.
Job Plan is ET-105861. The data sheet is blank, no as founds taken.
The package is heading towards Bill Erbe through EWRS.
Gary

From: Bickel, Eric E
Sent: Wednesday, April 15, 2009 2:45 PM
To: Jackson, Gary L
Subject: RE: 272AS019 RADECO. Contaminated, cannot cal.

Gary-
Can you please provide what package paper work you have so that I may include it in the PER.

Thanx

Eric E. Bickel
Certified Health Physicist (CHP)
Base Ops RadCon

Location: 274AW/B-102
MSIN: S5-07
Phone: 372.1470
Cell Phone: 521.6631
FAX: 372.3106

From: Jackson, Gary L
Sent: Wednesday, April 15, 2009 1:19 PM
To: Bickel, Eric E
Cc: Pattee, David W; Erbe, William F
Subject: 272AS019 RADECO. Contaminated, cannot cal.

Dave please dispose this radico.
Eric no "as found" were taken. ET-105861, 272AS019, TFC-08-2993.
Bill please cancell/remove work order from champs when you get WDL-111981

Gary

6/1/09
Last calibration 3/3/08. Therefore in service for 6 months on 3/3/08 → 9/3/08.
Review the sample records from 3/3/08 → 4/15/09 to ensure all uses captured
3/08 → 8/08 no use of 272AS019

Work Order: TFC-WO-08-2993

Title: RADECO AIR SAMPLER CALS

Date Created: 12/30/08 10:19:09
Equipment: 272AS019
SC/I: ☐
WorkFlow: PM
Planner: Erbe, Bill
Job Plan: ET-105861
WO Type: 2 - PREVENTIVE
Assigned: Everett, Brian K
Farm/Facility: PortEQ
State: Ready For Work
Phase Desig: BALANCE OF PLANT
PM Id: ET-105861
RAD Risk: Low
Flow Status: OK
Frequency: TOD-OOS
CACN: 200022
Project Id:
Date Reqd: 12/30/08 10:16:51
Priority: 4.2 Balance of Plant CM or Upgrades
Route Id: RAD1

Description:

Calibrate Radeco Air Sampler
Comments: Calibration frequency is quarterly based on the field use conditions.

Calibration Meter Readings

PMID/Meter Point	Input Units	Input Value	Output Units	Output Value	Accept Tol%	Low Limit	High Limit	As Found	Found In Tol?	As Left	Left In Tol?
ET-105861CT01	CFM	5.0000	CFM	5.0000	10.00	4.5000	5.5000		☑		☐
ET-105861CT02	CFM	4.0000	CFM	4.0000	10.00	3.6000	4.4000		☐		☐
ET-105861CT03	CFM	3.0000	CFM	3.0000	10.00	2.7000	3.3000		☐		☐
ET-105861CT04	CFM	2.0000	CFM	2.0000	10.00	1.8000	2.2000		☐		☐
ET-105861CT05	CFM	1.0000	CFM	1.0000	10.00	0.9000	1.1000		☐		☐

N/A

Cancell - see comments

KDD 4/20/09

Work Order: TFC-WO-08-2993
Title: RADECO AIR SAMPLER CALS

Step 1 Of 1 **Step Id:** 001 **State:** Ready For Work **Safety Class:**

Sched Start: **Sched Comp:** **Related Step/Link:**

Step Instructions:

Calibrate Air Sampler

Serial # _____

Identifier # _____

Filter Media Type _____

M&TE Flowmeter

Name _____

Standard Number _____

Calibration Date _____

Due Date _____

Tolerance _____

N/A

See Comments

Maximum As-Found air flow value from M&TE _____

Record As-Found and As-Left values on PMID meter.

Radcon Engineering notified of any out-of-tolerance value.

Yes X No _____ N/A _____

Comments:

CONTAMINATED — will be disposal.
Cancel work order.
Eric Rickel notified. Jackson 4-15-09

Work Order: WFO-WO-08-0416

Title: RADECO AIR SAMPLER CALS

Date Created: 2/20/08 09:52:53
Equipment: 272AS019
SC/I: ☐
WorkFlow: PM
Planner: Erbe, Bill
Job Plan: ET-105861
WO Type: 2 - PREVENTIVE
Assigned: Everett, Brian K
Farm/Facility: PortEQ
State: Ready For Work
Phase Desig: BALANCE OF PLANT
PM Id: ET-105861
RAD Risk: Low
Flow Status: OK
Frequency: 182
CACN: 502086
Project Id:
Date Reqd: 2/20/08 09:38:30
Priority: 4.2 Balance of Plant CM or Upgrades
Route Id: RAD1

Description:

Calibrate Radeco Air Sampler
Comments:
Calibration frequency is 6 Months. Frequency of PMID is TOD. Due date and recall is tracked via log book maintained in 272-AW Maintenance shop and calibration sticker.

Calibration Meter Readings

PMID/Meter Point	Input Units	Input Value	Output Units	Output Value	Accept Tol%	Low Limit	High Limit	As Found	Found In Tol?	As Left	Left In Tol?
ET-105861CT01	CFM	5.0000	CFM	5.0000	10.00	4.5000	5.5000	4.55	I	4.55	I
ET-105861CT02	CFM	4.0000	CFM	4.0000	10.00	3.6000	4.4000	3.7	I	3.7	I
ET-105861CT03	CFM	3.0000	CFM	3.0000	10.00	2.7000	3.3000	2.8	I	2.8	I
ET-105861CT04	CFM	2.0000	CFM	2.0000	10.00	1.8000	2.2000	1.9	I	1.9	I
ET-105861CT05	CFM	1.0000	CFM	1.0000	10.00	0.9000	1.1000	1.0	I	1.0	I

KDO 4/1/08

Work Order: WFO-WO-08-0416
Title: RADECO AIR SAMPLER CALS

Step 1 Of 1 Step Id: 001 State: Ready For Work Safety Class:
Sched Start: Sched Comp: Related Step/Link:

Step Instructions:

Calibrate Air Sampler

Serial # 8925
Identifier # 272AS019
Filter Media Type VERSAPOR 3000T

M&TE Flowmeter
Name RADECO
Standard Number 817-28-03-019
Calibration Date 4/4/07
Due Date 4/4/08
Tolerance ± 5%

Maximum As-Found air flow value from M&TE ~~5.6~~ 5.7 MAP 2/3/08

Record As-Found and As-Left values on PMID meter.

Radcon Engineering notified of any out-of-tolerance value.
Yes _____ No _____ N/A X ☐

Comments:
motor Housing Dented

Work Order: WFO-WO-08-0416
Title: RADECO AIR SAMPLER CALS

Assets Seq	Asset Class	Asset Id	Asset Name	SC/I	Expiration Date
	M&TE	817-28-03-019	RADECO	☐	4/4/08
	M&TE			☐	
	Meter	272AS019	RADECO Air Sampler	☐	

Trades Crew	Trade Id:	Trade Description:	Workers	Act Hrs.	Delay Code
	T070	Instrument & Control Techs	1	2.5	

Attachments: There are 2 document(s) attached to this work order

Description	Path/Name
Header Attachment	
RWP TF-001	__956419.WP TF-001
PROC - 6-RM-719 http://idmsweb/idmsprod/livelink.exe?fi	http://idmsweb/idmsprod/livelink.exe?func=ll&objId=19043602&objAction=Op

Electronic Approvals:

Date	State	Response	Profile	Name	Role
2/20/08 09:53:03	In Planning	Approved	clo_&_wfo_pm_planner	Erbe, Bill	
2/25/08 15:49:33	Ready For Work	Approved	clo_&_wfo_pm_planner	Erbe, Bill	

FWC

FWS Completed By: HAS FWC Date: 3/3/08 Update Job Plan (Y/N):

Completed Satisfactorily(yes,no): Y Asset Condition:

Comments: Dented Housing (motor

Save

Problem Evaluation Request (PER)

WRPS-PER-2009-1181
Closed 06/16/2009 12:45

PER No	Date of Discovery	Time of Discovery (24:00)	Project
WRPS-PER-2009-1181	05/14/2009	00:00	Base Ops

Location

OTHER

How Was Problem Discovered

Routine Work

Description of Concern or Problem

TREND ONLY - NO ACTION REQUIRED. This PER is written for automated PAAA/WSH trending purposes only. May 2009 First Aid Case. Assign to Craig Anderson, PAAA/WSH.

200W/616 – BASE OPS: Site Services & Tank Sampling, Tank Farm Waste Ops – FIRST AID – While directing truck driver, a gust of wind caught the door of the trailer striking employee's back and head. Employee treated at AMH and returned to work with no restrictions.

Requirement Not Satisfied	Source Document Number
None	
Equipment Identification Number	**System Identification**

Immediate actions Taken or Planned

Employee sent to AMH for evaluation.

Recommended Corrective actions

None

Originator Contact

No

Originators Name	Originators ID	Originators Phone	Date Initiated
Anderson, Craig E	H0001274	(509) 372-3940	06/11/2009

SHIFT OPERATIONS REVIEW

Title

PAAA/WSH trending purposes

How Discovered	Agency
self-ID prior to event	

Reportability	SSC Operability	Operability Review	Comp Measures Req
Non-Reportable	N/A	N/A	

Describe actions Taken or Recommended

No additional Base Ops Shift Office actions required at this time.

SO Reviewer Name	SO Reviewer ID	SO Reviewer Phone	SO Review Date
Johnson, Brian A	H0003531	(509) 373-2696	06/11/2009

SCREENING

PER Significance Level			
Trend Only			
Independent Assessment Review	**Occurrence Report Number**	**Externally Identified**	
No		No	
Assigned Responsible Manager	**Facilities Rep / SSO**	**Safety Management Rep**	
Anderson, Craig E			
Program		**Safety Management Program**	

• N/A		• Safety & Health	
PER Screening Comments			
Trend Only - No further actions required (Nancy Brown 06/15/09)			
Causal Code			
MGT/Comm/Train	**Human Performance**	**GEMS**	**Equip/Eng/Other**
Failed Barrier	**ORPS Code**	**Functional Area**	**Work Process**
	Not Applicable	Occupational Safety and Health	• Vehicle Operation - Work-Related Transportation
ISMS	**Consequence Code**		
Identify and analyze hazards	• Injury/Other - Minor injuries or illnesses, first aid items - not captured in other consequence categories		
PER Screening Chair	**PER Screening Chair ID**	**PER Screening Chair Phone**	**PER Screening Date**
Brown, Nancy L	H0088797	(509) 373-0992	06/15/2009
PAAA REVIEW			
PAAA Screening	**PAAA Codes**	**Function Codes**	
Not subject to PAAA			
NTS Report Number	**NTS Report Date**		
Repetitive / Recurrent	**Programmatic**	**Intentional Violation / Misrepresentation**	
No	No	No	
PAAA Screening Comments			
PAAA Reviewer Name	**PAAA Review Date**		
Anderson, Craig E	06/15/2009		
PAAA Approver Name	**PAAA Approve Date**		
Anderson, Craig E	06/16/2009		
SENIOR MANAGEMENT REVIEW/CONCURRENCE			
TF Operations Morning Leadership Call			
N/A			
Instructions for Responsible Manager			
Senior Management	**Sr Mgmt ID**	**Sr Mgmt Phone**	**Sr Mgmt Review Date**
Brown, Nancy L	H0088797	(509) 373-0992	06/16/2009
ATTACHMENTS			
Link to PER			

-- End of Report --
06/16/2009 01:15 PM

Task# WRPS-PER-2009-1181

E-STARS[R] Report
Task Detail Report
06/16/2009 1315

TASK INFORMATION			
Task#	WRPS-PER-2009-1181		
Subject	TREND; PAAA/WSH trending purposes		
Parent Task#		Status	CLOSED 06/16/2009
Reference		Due	06/13/2009
Originator	^PER Coordinator	Priority	Medium
Originator Phone		Category	PER
Origination Date	06/11/2009 1027	Generic1	None
Remote Task#		Generic2	None
Deliverable	PER Review	Generic3	None
Class	None	View Permissions	Global
Instructions	*No Instructions*		

ROUTING LISTS		
1	Review Initial PER	Inactive
	Review New PER	
	• ^SO(Johnson, Brian A) - Review - Concur - 06/11/2009 2004 *Instructions:*	
	• ^PER Screening(Brown, Nancy L) - Review - Concur - 06/15/2009 1406 *Instructions:*	
	• ^Mgr Review(Brown, Nancy L) - Review - Concur - 06/16/2009 1201 *Instructions:*	

ATTACHMENTS	
Attachments	1. Link to PER

COMMENTS

No Comments

TASK DUE DATE HISTORY			
Modified	06/11/2009 1027 - ^PER Coordinator	New Due Date	06/13/2009 1630

SUB TASK HISTORY

No Subtasks

-- end of report --

Save

Problem Evaluation Request (PER)

WRPS-PER-2009-1182
Closed 06/16/2009 12:45

PER No	Date of Discovery	Time of Discovery (24:00)	Project
WRPS-PER-2009-1182	05/18/2009	00:00	Base Ops

Location

OTHER

How Was Problem Discovered

Routine Work

Description of Concern or Problem

TREND ONLY - NO ACTION REQUIRED. This PER is written for automated PAAA/WSH trending purposes only. May 2009 First Aid Case. Assign to Craig Anderson, PAAA/WSH.

200E/MO268 – BASE OPS: Shift Operations, Operations – FIRST AID – During performance of job duties, employee received laceration to finger. Employee elected to self-treat with management concurrence.

Requirement Not Satisfied	Source Document Number
None	

Equipment Identification Number	System Identification

Immediate actions Taken or Planned

Employee elected to self-treat with manager's agreement.

Recommended Corrective actions

None

Originator Contact

No

Originators Name	Originators ID	Originators Phone	Date Initiated
Anderson, Craig E	H0001274	(509) 372-3940	06/11/2009

SHIFT OPERATIONS REVIEW

Title

Automated PAAA/WSH trending purposes

How Discovered	Agency
self-ID prior to event	

Reportability	SSC Operability	Operability Review	Comp Measures Req
Non-Reportable	N/A	N/A	

Describe actions Taken or Recommended

No additional Base Ops Shift Office actions required at this time.

SO Reviewer Name	SO Reviewer ID	SO Reviewer Phone	SO Review Date
Johnson, Brian A	H0003531	(509) 373-2696	06/11/2009

SCREENING

PER Significance Level	
Trend Only	

Independent Assessment Review	Occurrence Report Number	Externally Identified	
No		No	

Assigned Responsible Manager	Facilities Rep / SSO	Safety Management Rep	
Anderson, Craig E			

Program	Safety Management Program
• N/A	• Safety & Health

PER Screening Comments			
Trend Only - No further actions required (Nancy Brown 06/15/09)			
Causal Code			
MGT/Comm/Train	**Human Performance**	**GEMS**	**Equip/Eng/Other**
Failed Barrier	**ORPS Code**	**Functional Area**	**Work Process**
	Not Applicable	Occupational Safety and Health	• ^N/A^
ISMS	**Consequence Code**		
Identify and analyze hazards	• Injury/Other - Minor injuries or illnesses, first aid items - not captured in other consequence categories		
PER Screening Chair	**PER Screening Chair ID**	**PER Screening Chair Phone**	**PER Screening Date**
Brown, Nancy L	H0088797	(509) 373-0992	06/15/2009
PAAA REVIEW			
PAAA Screening	**PAAA Codes**	**Function Codes**	
PAAA, Non-NTS Reportable	• 10 CFR 851.23 (a)(3)	• Personal Protective Equipment (PPE)	
NTS Report Number	**NTS Report Date**		
Repetitive / Recurrent	**Programmatic**	**Intentional Violation / Misrepresentation**	
No	No	No	
PAAA Screening Comments			
29CFR1910.132(a)			
PAAA Reviewer Name	**PAAA Review Date**		
Anderson, Craig E	06/15/2009		
PAAA Approver Name	**PAAA Approve Date**		
Anderson, Craig E	06/16/2009		
SENIOR MANAGEMENT REVIEW/CONCURRENCE			
TF Operations Morning Leadership Call			
N/A			
Instructions for Responsible Manager			
Senior Management	**Sr Mgmt ID**	**Sr Mgmt Phone**	**Sr Mgmt Review Date**
Brown, Nancy L	H0088797	(509) 373-0992	06/16/2009
ATTACHMENTS			
Link to PER			

-- End of Report --
06/16/2009 01:15 PM

Task# WRPS-PER-2009-1182

E-STARS[R] Report
Task Detail Report
06/16/2009 1315

TASK INFORMATION			
Task#	WRPS-PER-2009-1182		
Subject	TREND: Automated PAAA/WSH trending purposes		
Parent Task#		Status	CLOSED 06/16/2009
Reference		Due	06/13/2009
Originator	^PER Coordinator	Priority	Medium
Originator Phone		Category	PER
Origination Date	06/11/2009 1030	Generic1	None
Remote Task#		Generic2	None
Deliverable	PER Review	Generic3	None
Class	None	View Permissions	Global
Instructions	*No Instructions*		

ROUTING LISTS		
1	Review Initial PER	Inactive
	Review New PER	
	• ^SO(Johnson, Brian A) - Review - Concur - 06/11/2009 2010 *Instructions:*	
	• ^PER Screening(Brown, Nancy L) - Review - Concur - 06/15/2009 1408 *Instructions:*	
	• ^Mgr Review(Brown, Nancy L) - Review - Concur - 06/16/2009 1201 *Instructions:*	

ATTACHMENTS	
Attachments	1. Link to PER

COMMENTS

No Comments

TASK DUE DATE HISTORY			
Modified	06/11/2009 1030 - ^PER Coordinator	New Due Date	06/13/2009 1630

SUB TASK HISTORY

No Subtasks

-- end of report --

Save

Problem Evaluation Request (PER)

WRPS-PER-2009-1183
Closed 06/16/2009 12:45

PER No	Date of Discovery	Time of Discovery (24:00)	Project
WRPS-PER-2009-1183	05/26/2009	00:00	Base Ops

Location

SY Farm

How Was Problem Discovered

Routine Work

Description of Concern or Problem

TREND ONLY - NO ACTION REQUIRED. This PER is written for automated PAAA/WSH trending purposes only. May 2009 First Aid Case. Assign to Craig Anderson, PAAA/WSH.

200E/SYFarm – BASE OPS: Maintenance/Work Execution, East Maintenance, Electrical – FIRST AID – Employee developed a rash on hands while wearing surgeons gloves. Employee treated at AMH and returned to work with no restrictions.

Requirement Not Satisfied	Source Document Number
one	

Equipment Identification Number	System Identification

Immediate actions Taken or Planned

Employee sent to AMH.

Recommended Corrective actions

None

Originator Contact

No

Originators Name	Originators ID	Originators Phone	Date Initiated
Anderson, Craig E	H0001274	(509) 372-3940	06/11/2009

SHIFT OPERATIONS REVIEW

Title

PER is written for automated PAAA/WSH trending purposes

How Discovered	Agency
self-ID prior to event	

Reportability	SSC Operability	Operability Review	Comp Measures Req
Non-Reportable	N/A	N/A	

Describe actions Taken or Recommended

No additional Base Ops Shift Office actions required at this time.

SO Reviewer Name	SO Reviewer ID	SO Reviewer Phone	SO Review Date
Johnson, Brian A	H0003531	(509) 373-2696	06/11/2009

SCREENING

PER Significance Level	
Trend Only	

Independent Assessment Review	Occurrence Report Number	Externally Identified	
No		No	

Assigned Responsible Manager	Facilities Rep / SSO	Safety Management Rep	
Anderson, Craig E			

Program	Safety Management Program
• N/A	• Safety & Health

PER Screening Comments			
Trend Only - No further actions required (Nancy Brown 06/15/09)			
Causal Code			
MGT/Comm/Train	**Human Performance**	**GEMS**	**Equip/Eng/Other**
Failed Barrier	**ORPS Code**	**Functional Area**	**Work Process**
	Not Applicable		• Maintenance: Corrective • Personnel Protection Equipment Use (PPE)
ISMS	**Consequence Code**		
	• Injury/Other - Minor injuries or illnesses, first aid items - not captured in other consequence categories		
PER Screening Chair	**PER Screening Chair ID**	**PER Screening Chair Phone**	**PER Screening Date**
Brown, Nancy L	H0088797	(509) 373-0992	06/15/2009
PAAA REVIEW			
PAAA Screening	**PAAA Codes**	**Function Codes**	
Not subject to PAAA			
NTS Report Number	**NTS Report Date**		
Repetitive / Recurrent	**Programmatic**	**Intentional Violation / Misrepresentation**	
No	No	No	
PAAA Screening Comments			
PAAA Reviewer Name	**PAAA Review Date**		
Anderson, Craig E	06/15/2009		
PAAA Approver Name	**PAAA Approve Date**		
Anderson, Craig E	06/16/2009		
SENIOR MANAGEMENT REVIEW/CONCURRENCE			
TF Operations Morning Leadership Call			
N/A			
Instructions for Responsible Manager			
Senior Management	**Sr Mgmt ID**	**Sr Mgmt Phone**	**Sr Mgmt Review Date**
Brown, Nancy L	H0088797	(509) 373-0992	06/16/2009
ATTACHMENTS			
Link to PER			

-- End of Report --
06/16/2009 01:15 PM

Task# WRPS-PER-2009-1183			
E-STARS[R] Report Task Detail Report 06/16/2009 1315			
TASK INFORMATION			
Task#	WRPS-PER-2009-1183		
Subject	TREND; PER is written for automated PAAA/WSH trending purposes		
Parent Task#		Status	CLOSED 06/16/2009
Reference		Due	06/13/2009
Originator	^PER Coordinator	Priority	Medium
Originator Phone		Category	PER
Origination Date	06/11/2009 1043	Generic1	None
Remote Task#		Generic2	None
Deliverable	PER Review	Generic3	None
Class	None	View Permissions	Global
Instructions	*No Instructions*		
ROUTING LISTS			
1	Review Initial PER		Inactive
	Review New PER		
	• ^SO(Johnson, Brian A) - Review - Concur - 06/11/2009 2010 *Instructions:*		
	• ^PER Screening(Brown, Nancy L) - Review - Concur - 06/15/2009 1411 *Instructions:*		
	• ^Mgr Review(Brown, Nancy L) - Review - Concur - 06/16/2009 1202 *Instructions:*		
ATTACHMENTS			
Attachments	1. Link to PER		
COMMENTS			
No Comments			
TASK DUE DATE HISTORY			
Modified	06/11/2009 1043 - ^PER Coordinator	New Due Date	06/13/2009 1630
SUB TASK HISTORY			
No Subtasks			
-- end of report --			

Save

Problem Evaluation Request (PER)

WRPS-PER-2009-1184
In Process/Work

PER No	Date of Discovery	Time of Discovery (24:00)	Project
WRPS-PER-2009-1184	06/01/2009	13:15	RadCon Programs

Location

All Tank Farms

How Was Problem Discovered

DOE

Description of Concern or Problem

DOE Office of Health, Safety and Security issued a Safety Advisory in April 2009, "Use of Grinding Wheels Containing Uranium" No 2009-01. This advisory provides information about the potential for radiological consequences with the use of grinding wheels containing uranium. The use of grinding wheeels containing uranium under certain conditions may lead to contamination control issues and internal exposures.

The advisory provides good practice actions for use of consumer products containing radioactive material that WRPS needs to evaluate and apply as appropriate.

Requirement Not Satisfied	Source Document Number

Equipment Identification Number	System Identification

Immediate actions Taken or Planned

Notified the RADCON Managers and Work Planners of the advisory. One of the Work Planners conducted some research by reviewing the BOMs where grinding wheels were ordered for the past two years. The grinding wheels ordered as identified in the BOMs were Aluminum Oxide and Zirconium Oxide type grinding wheels. So it doesn't appear Uranium type grinding wheels have been ordered over the past two years and we may not have any issue.

Recommended Corrective actions

Review good practices actions in the advisory and if appropriate initiate corrective actions to eliminate the purchase or use of Uranium type grinding wheels or control their use if they cannot be eliminated.

Originator Contact

No

Originators Name	Originators ID	Originators Phone	Date Initiated
Rolph, Jim T	H0034314	(509) 376-7686	06/11/2009

SHIFT OPERATIONS REVIEW

Title

Safety Advisory in April 2009

How Discovered	Agency
self-ID prior to event	

Reportability	SSC Operability	Operability Review	Comp Measures Req
Non-Reportable	N/A	N/A	

Describe actions Taken or Recommended

No additional Base Ops Shift Office actions required at this time.

SO Reviewer Name	SO Reviewer ID	SO Reviewer Phone	SO Review Date
Johnson, Brian A	H0003531	(509) 373-2696	06/11/2009

SCREENING

PER Significance Level	
PIE/CIM	

Independent Assessment Review	Occurrence Report Number	Externally Identified	
No		No	

Assigned Responsible	Facilities Rep / SSO	Safety Management Rep	

Manager			
Rolph, Jim T			
Program		**Safety Management Program**	
• N/A		• Industrial Safety • Radiological Control	
PER Screening Comments			
See recommended corrective actions (Nancy Brown 06/15/09)			
Causal Code			
MGT/Comm/Train	**Human Performance**	**GEMS**	**Equip/Eng/Other**
Failed Barrier	**ORPS Code**	**Functional Area**	**Work Process**
	Not Applicable	Acquisitions/Procurement	• Hazard Communication • Safety Inspections
ISMS	**Consequence Code**		
Identify and analyze hazards	• Safety Concerns - Safety concerns, suggestions, and potential safety issues		
PER Screening Chair	**PER Screening Chair ID**	**PER Screening Chair Phone**	**PER Screening Date**
Brown, Nancy L	H0088797	(509) 373-0992	06/15/2009
PAAA REVIEW			
PAAA Screening	**PAAA Codes**	**Function Codes**	
Not subject to PAAA			
NTS Report Number	**NTS Report Date**		
Repetitive / Recurrent	**Programmatic**	**Intentional Violation / Misrepresentation**	
No	No	No	
PAAA Screening Comments			
PAAA Reviewer Name	**PAAA Review Date**		
Anderson, Craig E	06/15/2009		
PAAA Approver Name	**PAAA Approve Date**		
Anderson, Craig E	06/16/2009		
SENIOR MANAGEMENT REVIEW/CONCURRENCE			
TF Operations Morning Leadership Call			
N/A			
Instructions for Responsible Manager			
Evaluate suggestion, enter comments and required actions on PIE/CIM tab of the PER. Disposition in accordance with TFC-ESHQ-Q_C-C-01, Problem Evaluation Request.			
Senior Management	**Sr Mgmt ID**	**Sr Mgmt Phone**	**Sr Mgmt Review Date**
Brown, Nancy L	H0088797	(509) 373-0992	06/16/2009
CAUSE ANALYSIS			
Description of Occurrence			
Extent of Condition			
Safety Significance			

Generic Implications
Remedial Corrective Action
Causal Analysis, Apparent Cause and/or Root Cause Analysis
PIE/CIM
Evaluation of PIE/CIM Initiative
ATTACHMENTS
Link to PER
E-mail traffic on HSS Safety Advisory
HSS Safety Advisory Use of Grinding Wheels Containing Uranium, April 2009

AUDIT HISTORY

Change Date	Auditor	Comments
06/16/2009 12:02	Brown, Nancy L	'PER Screening Comments' was changed.
06/16/2009 12:02	Brown, Nancy L	Responsible Manager Task Launched by Brown, Nancy L

-- End of Report --
07/09/2009 06:14 PM

Task# WRPS-PER-2009-1184

E-STARS[R] Report
Task Detail Report
07/09/2009 1814

TASK INFORMATION			
Task#	WRPS-PER-2009-1184		
Subject	PIE; Safety Advisory in April 2009		
Parent Task#		**Status**	Open
Reference		**Due**	08/10/2009
Originator	^PER Coordinator	**Priority**	Medium
Originator Phone		**Category**	PER
Origination Date	06/11/2009 1104	**Generic1**	None
Remote Task#		**Generic2**	None
Deliverable	PER Review	**Generic3**	None
Class	None	**View Permissions**	Global
Instructions	*No Instructions*		

ROUTING LISTS

1	Responsible Manager	Active
	Evaluate suggestion, enter comments and required actions on PIE/CIM tab of the PER. Disposition in accordance with TFC-ESHQ-Q_C-C-01, Problem Evaluation Request.	
	• Rolph, Jim T - Assign - Awaiting Response - Due Date - 08/10/2009 1630 *Instructions:*	
2	Review Initial PER	Inactive
	Review New PER	
	• ^SO(Johnson, Brian A) - Review - Concur - 06/11/2009 2012 *Instructions:*	
	• ^PER Screening(Brown, Nancy L) - Review - Concur - 06/15/2009 1419 *Instructions:*	
	• ^Mgr Review - Review - Cancelled - 06/16/2009 1202 *Instructions:*	

ATTACHMENTS

Attachments	1. Link to PER 2. E-mail traffic on HSS Safety Advisory 3. HSS Safety Advisory Use of Grinding Wheels Containing Uranium, April 2009

COMMENTS

No Comments

TASK DUE DATE HISTORY

Modified	06/16/2009 1202 - ^PER Coordinator	**New Due Date**	08/10/2009 1630
Modified	06/16/2009 1202 - ^PER Coordinator	**New Due Date**	08/10/2009 1630
Modified	06/11/2009 1104 - ^PER Coordinator	**New Due Date**	06/13/2009 1630

SUB TASK HISTORY

No Subtasks

-- end of report --

From: Marks, Jeff J
Sent: Wednesday, June 03, 2009 12:36 PM
To: Livesey, Lee M
Cc: Brannan, Patrick B (Brad); Barrett, Scott G; Berglund, Owen D; Berry, Larry G; Bickel, Eric E; Butler, J D (Dane); Cooper, William R; Decker, William A; Duffy, William L; Dupaquier, James C (Jim); Gray, Keith W; Haan, Thomas P; Hanni, Jonathan B; Hart, Victor W; Hathaway, S L (Steve); Holbrook, Arlo R; Le, Tuyet M; Livesey, Lee M; Rolph, James T
Subject: RE: HSS Safety Advisory

Lee,
In doing some research on these, some of the BOMs that the material coordinators filled out for these items in the last two years lists multiple types of abrasive wheels. A majority of the abrasive wheels were of Aluminum Oxide as the major constituent. This type of grinding wheels and cut off wheels are for use on common materials such as carbon and mild steel. The others that I located on the BOMs were constructed of Zirconium Oxide. This type of grinding wheels is a "harder" grinding wheel that is used for grinding "harder" materials such as stainless steel. I am not sure of the nature of the material(as far as radioactivity) and I couldn't locate an MSDS data for them either. The aluminum Oxide grinding wheels have MSDS for them and are easy to find based on product name.

Jeff M

From: Livesey, Lee M
Sent: Tuesday, June 02, 2009 3:01 PM
To: Brannan, Patrick B (Brad); Adams, Edward J; Rolph, James T
Cc: Adams, Edward J; Bachaud, Grant C; Barrett, Scott G; Berglund, Owen D; Berry, Larry G; Bickel, Eric E; Brannan, Patrick B (Brad); Butler, J D (Dane); Cooper, William R; Crockett, James E (Jim); Davis, Glenda M; Decker, William A; Duffy, William L; Dupaquier, James C (Jim); Gray, Keith W; Haan, Thomas P; Hanni, Jonathan B; Hart, Victor W; Hathaway, S L (Steve); Holbrook, Arlo R; Huddleston, Laura B; Le, Tuyet M; Livesey, Lee M; Livesey, Stephanie H; Marks, Jeff J; Pilling, Terry L; Rolph, James T; Lawing, Kurt D; Lawing, Keith J
Subject: FW: HSS Safety Advisory
Importance: High

I am unaware of the use of any of these Uranium grinding wheels at WRPS facilities, but please look at the attached HSS Safety Advisory for application.

Thanks,

Lee

From: Beranek, Fred
Sent: Monday, June 01, 2009 3:07 PM
To: Livesey, Lee M
Subject: FW: HSS Safety Advisory

I assume we don't have any of these critters?

From: Steelman, Tracy L
Sent: Monday, June 01, 2009 1:15 PM
To: Rolph, James T
Cc: Beranek, Fred
Subject: HSS Safety Advisory

Jim,

Attached is a DOE-HQ Safety Advisory, *Use of Grinding Wheels Containing Uranium*. In the past, our field office (ORP) has been interested in actions taken in response to these advisories. Please review the advisory and advise on how we should proceed with the actions/good practices documented in the advisory.

Thanks,
Tracy

Office of Health, Safety and Security

HSS

Safety Advisory

Use of Grinding Wheels Containing Uranium

No. 2009-01 **April 2009**

Purpose

This Advisory provides information regarding the potential for radiological consequences associated with the use of grinding wheels containing uranium. A recent Department of Energy (DOE) assessment identified a lack of awareness and controls associated with use of grinding wheels containing uranium. Under certain conditions, the use of these products may lead to contamination control issues and internal exposures.

Background

Due to its extreme hardness, uranium is used in industrial grinding wheels. The process of grinding causes uranium to be removed from the wheel. This results in the production of airborne radioactive material or generation of surface contamination. These could result in a radiation dose to a worker. Surface contamination from these materials may also create difficulties in identifying the source of, and responding to, contamination events.

What are the Hazards?

Certain use of these materials may result in the production of airborne radioactive material or generation of surface contamination.

Implementation of standard-accepted industrial hygiene or radiological control work practices should be adequate to address any radiological concern. Relatively simple actions, such as the proper use of exhaust ventilation and proper positioning; i.e., upstream of the airflow, can significantly lower potential intakes. A hazard assessment, commensurate with the hazard, will determine the magnitude of the hazard and whether additional assessment is needed.

If the hazard assessment suggests that an individual may receive elevated exposures while working with these materials, review workplace controls; e.g., local exhaust ventilation and housekeeping, to ensure that exposures are appropriately controlled.

Minimizing Exposure and Contamination

The following actions are good practices as applied to use of consumer products containing radioactive material:

- Read Material Safety Data Sheets (MSDS) and other product literature for all materials used;
- Use substitute products to eliminate the potential for exposure where possible;
- Make use of local and exhaust ventilation to clear the breathing zone of particles and fumes;
- If there is potential for generating airborne radioactive material, consider using a face mask respirator or helmet and position the head to minimize exposure to fumes and dust;
- After use of the material is complete, ensure the work area is adequately cleaned using practices to minimize airborne dust generation; and
- Ensure workers are trained in the safe and efficient operation of the use of the material, and they understand measures to reduce possible surface contamination.

Summary

- Using consumer products containing radioactive material can result in radiation exposures.
- Perform a hazard analysis, commensurate with the hazard, before using these materials to evaluate needed controls.
- Institute appropriate radiological controls to reduce potential exposure during use, and clean the area after use.
- If the appropriate industrial hygiene and radiological controls (ISM program) are applied, then employee exposures will be minimized.

DOE is developing a more comprehensive policy on use of consumer products containing radioactive material.

If you have any questions regarding this Advisory, please contact the Office of Worker Safety and Health Policy at (301) 903-6061.

Glenn S. Podonsky
Chief Health, Safety and Security Officer
Office of Health, Safety and Security

Save

Problem Evaluation Request (PER)

WRPS-PER-2009-1188
In Process/Work

PER No	Date of Discovery	Time of Discovery (24:00)	Project
WRPS-PER-2009-1188	06/15/2009	09:00	Performance Assurance

Location

2750E

How Was Problem Discovered

General Observation

Description of Concern or Problem

A negative trend was noted with regard to the dispositioning and processesing of PERs. PERs delinquncy rate increased significantly since January 2009, as illustrated by the attached chart. It should be mentioned that Performance Assurance and CAM organization sent weekly warning to all PERs owners with the following notice: "Attached you will find the E-STARS Early Warning Report. Thes are ESTARS tasks generated from a PER owned by you, delegated to you, assigned to you or you are the Senior Manager. The expectation is that every effort be made to complete your resolution in a timely manner or to extend your due date if circumstances require. A delinquency report will be published .....(weekly report date) and those tasks on this attachment not completed or extended by that time will be counted towards the company overall delinquency rate and be reflected in the company Performance Indicators." In addition, weekly and month-end delinquency reports are distributed to the PERs owners.

Requirement Not Satisfied	Source Document Number
TFC-ESHQ-Q_C-C-01	
Equipment Identification Number	**System Identification**
N/A	

Immediate actions Taken or Planned

Discussed this problem with QA Manager and initiated this PER

Recommended Corrective actions

Recommend to assign this PER to David Shugars as PER/wRes.

Originator Contact

I would like to review the the corrective actions at closure to ensure they were effective

Originators Name	Originators ID	Originators Phone	Date Initiated
Maciuca, Tino	H0020930	(509) 373-6334	06/15/2009

SHIFT OPERATIONS REVIEW

Title

Dispositioning and processesing of PERs

How Discovered	Agency
self-ID prior to event	

Reportability	SSC Operability	Operability Review	Comp Measures Req
Non-Reportable	N/A	N/A	

Describe actions Taken or Recommended

No additional Base Ops Shift Office actions required at this time.

SO Reviewer Name	SO Reviewer ID	SO Reviewer Phone	SO Review Date
Johnson, Brian A	H0003531	(509) 373-2696	06/15/2009

SCREENING

PER Significance Level			
PER with Resolution			
Independent Assessment Review	**Occurrence Report Number**	**Externally Identified**	
Yes		No	
Assigned	**Facilities Rep / SSO**	**Safety Management Rep**	

Responsible Manager			
Shugars, David L		Shugars, David L	
Program		**Safety Management Program**	
• N/A		• Performance Assessment • Quality Assurance	
PER Screening Comments			
PER w/ Res with Formal Apparent Cause Analysis -- procedure non-compliance. (Nancy Brown 06/16/09)			
Causal Code			
MGT/Comm/Train	**Human Performance**	**GEMS**	**Equip/Eng/Other**
Failed Barrier	**ORPS Code**	**Functional Area**	**Work Process**
	Not Applicable	Quality Assurance	• Corrective Action Management • Procedures: Implementation, Compliance • Requirements Management
ISMS	**Consequence Code**		
Perform work within the controls	• Procedure - Administrative - Procedure ambiguous, in error, could not be worked, was not used • Quality Requirement - Failure to meet QA requirements, of LTA implementation of QAPP (Customer Defined)		
PER Screening Chair	**PER Screening Chair ID**	**PER Screening Chair Phone**	**PER Screening Date**
Brown, Nancy L	H0088797	(509) 373-0992	06/16/2009
PAAA REVIEW			
PAAA Screening	**PAAA Codes**	**Function Codes**	
PAAA, Non-NTS Reportable	• 10 CFR 830.122 (c)(2) • 10 CFR 830.122 (c)(3)	• Corrective Action Program	
NTS Report Number	**NTS Report Date**		
Repetitive / Recurrent	**Programmatic**	**Intentional Violation / Misrepresentation**	
No	No	No	
PAAA Screening Comments			
PAAA Reviewer Name	**PAAA Review Date**		
Anderson, Craig E	06/16/2009		
PAAA Approver Name	**PAAA Approve Date**		
Anderson, Craig E	06/17/2009		
SENIOR MANAGEMENT REVIEW/CONCURRENCE			
TF Operations Morning Leadership Call			
N/A			
Instructions for Responsible Manager			
Review the PER Screening Tab for requested data. Complete the task in E-STARS in accordance with TFC-ESHQ-Q_C-C-01, and TFC-ESHQ-Q_ADM-C-12 Apparent Cause Analysis & Corrective Action Planning.			
Senior Management	**Sr Mgmt ID**	**Sr Mgmt Phone**	**Sr Mgmt Review Date**

Brown, Nancy L	H0088797	(509) 373-0992	06/17/2009

CAUSE ANALYSIS

Description of Occurrence

Extent of Condition

Safety Significance

Generic Implications

Remedial Corrective Action

Causal Analysis, Apparent Cause and/or Root Cause Analysis

ATTACHMENTS

DelinquencyByPER_Owner.pdf

Link to PER

AUDIT HISTORY

Change Date	Auditor	Comments
06/17/2009 14:15	Brown, Nancy L	Responsible Manager Task Launched by Brown, Nancy L

-- End of Report --
07/09/2009 06:16 PM

Task# WRPS-PER-2009-1188

E-STARS[R] Report
Task Detail Report
07/09/2009 1816

TASK INFORMATION			
Task#	WRPS-PER-2009-1188		
Subject	RES; Dispositioning and processesing of PERs		
Parent Task#		**Status**	Open
Reference		**Due**	08/07/2009
Originator	^PER Coordinator	**Priority**	Medium
Originator Phone		**Category**	PER
Origination Date	06/15/2009 1006	**Generic1**	None
Remote Task#		**Generic2**	None
Deliverable	PER Review	**Generic3**	None
Class	None	**View Permissions**	Global
Instructions	*No Instructions*		

ROUTING LISTS		
1	Responsible Manager	Active
	Review the PER Screening Tab for requested data. Complete the task in E-STARS in accordance with TFC-ESHQ-Q_C-C-01, and TFC-ESHQ-Q_ADM-C-12 Apparent Cause Analysis & Corrective Action Planning.	
	• Shugars, David L - Assign - Awaiting Response - Due Date - 07/30/2009 1630 *Instructions:*	
	• Shugars, David L - Assign - Awaiting Response - Due Date - 07/30/2009 1630 *Instructions:* Did you contact the originator about the PER? Document your contact in the response window.	
	• ^Independent Assessment Review - Review - Awaiting Response - Due Date - 08/03/2009 1630 *Instructions:* Independent Assessor Review	
	• Shugars, David L - Review - Awaiting Response - Due Date - 08/07/2009 1630 *Instructions:* Safety Management Representative Review	
2	Review Initial PER	Inactive
	Review New PER	
	• ^SO(Johnson, Brian A) - Review - Concur - 06/15/2009 1018 *Instructions:*	
	• ^PER Screening(Brown, Nancy L) - Review - Concur - 06/16/2009 1430 *Instructions:*	
	• ^Mgr Review - Review - Cancelled - 06/17/2009 1415 *Instructions:*	

ATTACHMENTS

Attachments	1. DelinquencyByPER_Owner.pdf 2. Link to PER

COMMENTS

No Comments

TASK DUE DATE HISTORY

Task# WRPS-PER-2009-1188			
Modified	06/17/2009 1415 - ^PER Coordinator	**New Due Date**	07/30/2009 1630
Modified	06/17/2009 1415 - ^PER Coordinator	**New Due Date**	08/07/2009 1630
Modified	06/15/2009 1006 - ^PER Coordinator	**New Due Date**	06/17/2009 1630
SUB TASK HISTORY			
No Subtasks			

-- end of report --

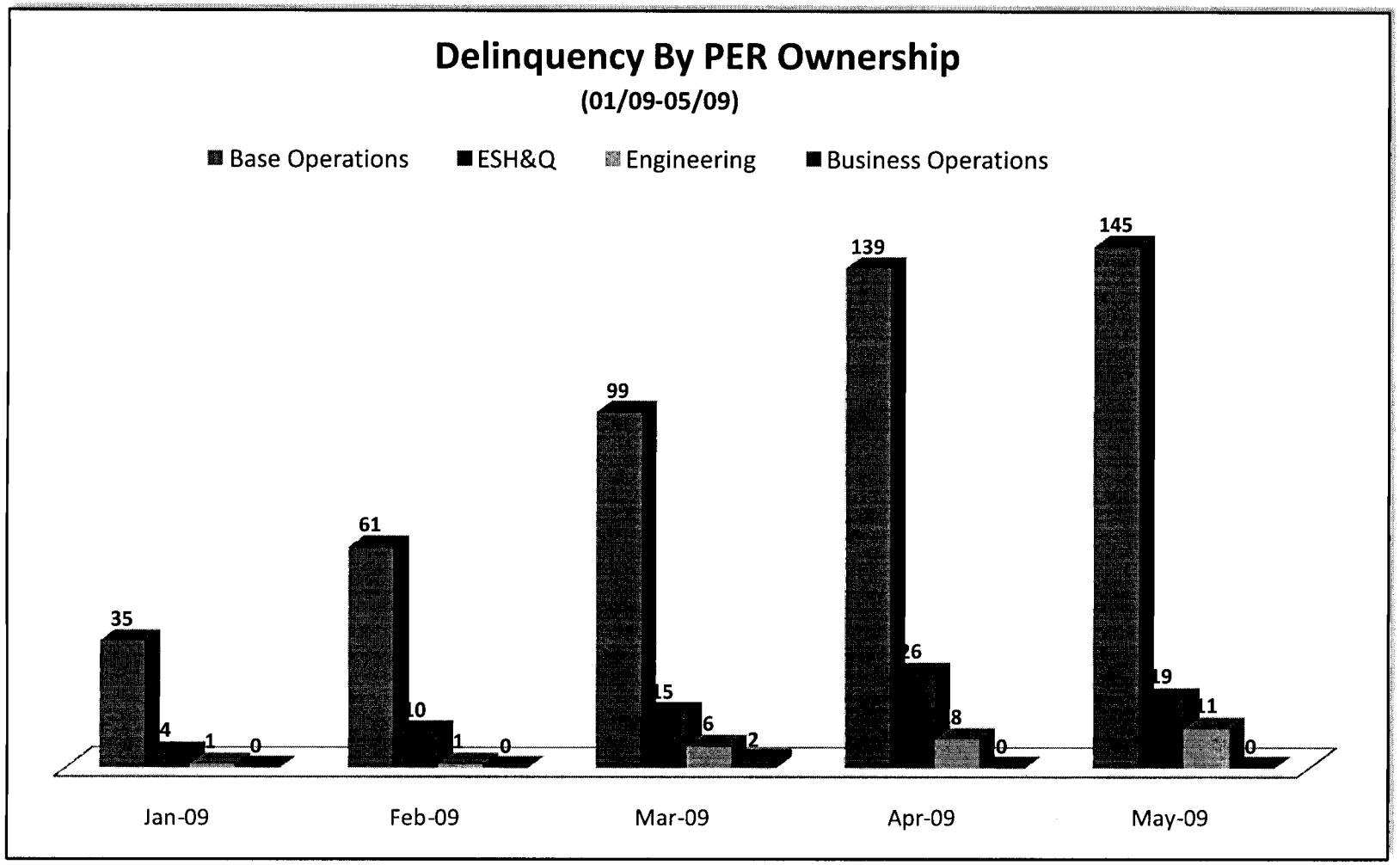
Delinquency By PER Ownership
(01/09-05/09)
Base Operations
ESH&Q
Engineering
Business Operations
35
4
1
0
61
10
1
0
99
15
6
2
139
26
8
0
145
19
11
0
Jan-09
Feb-09
Mar-09
Apr-09
May-09

Save

Problem Evaluation Request (PER)

WRPS-PER-2009-1193
Closed 06/22/2009 11:00

PER No	Date of Discovery	Time of Discovery (24:00)	Project
WRPS-PER-2009-1193	06/16/2009	11:00	Base Ops

Location

OTHER

How Was Problem Discovered

DOE FAC REP

Description of Concern or Problem

A review of the DRAFT ORP Facility Representative's Monthly Report for May 2009, indicated the following weakness:

OBSERVATION: S-09-AMTF-TANKFARM-005-O07; Use of Orange Cones as a Second Control Should be Evaluated For Compliance With HNF-RD-28954, "Equipment Operation Near Overhead Electrical Lines." (Joe Sondag - May 11, 2009)

Discussion:
The second of two cranes was being set up near U Plant and the spotter used two orange cones which were placed on the ground below the overhead electrical line. The cones were about 20 feet apart and the affected line distance was approximately 30 feet. The orange cones are not specifically identified as a control in HNF-RD-28954, Section 2.2.3. Section 2.2.3 states in part that, "The second of the two mandatory controls to prevent inadvertent contact with overhead energized electrical lines must be one or more of the controls listed below. If alternative controls are considered they must be at least as effective as the listed controls, and they shall be approved by the PHMC Interpretive Authority for NFPA 70E or by the authority having jurisdiction for NFPA 70E as delegated by DOE-RL." One of the controls is "Use stakes or painted lines to provide constant reminders to operators and spotters of the proximity to overhead energized electrical lines."

The FR discussed with the Fluor Hanford Electrical Safety Interpretive Authority (IA) about the acceptability of the orange cone control. The FH IA had provided verbal approval; however, written approval was not produced. The following guidance was provided by the FH IA:

- Cones are verified to be in the correct location during their initial placement.

- Placement of cones are verified periodically during operations and following breaks in operation.

The FR also discussed with the DOE electrical safety subject matter expert (SME) this control since DOE has programmatic oversight responsibility for HNF-RD-28954. The DOE SME was going to follow-up with the FH IA.

A review of the PER database indicated that this specific issue had not been previously identified.

Requirement Not Satisfied	Source Document Number
Equipment Identification Number	**System Identification**

Immediate actions Taken or Planned

1. Discussed this issue with the ORP Facility Representative. This was an observation of a crane crew which was supporting TFC-WO-09-0739, 241-UX-302A Install 'Y' Adapter with Radial Filter. The ORP Facility Representative agreed that this could be a TREND as information for WRPS.
2. Wrote this PER.
3. Suggest PER assigned to Industrial Safety with Copies to Tim Krammer, Ernie Hamm, Cheryl Myott.

Recommended Corrective actions

1. No Further Action.

Originator Contact

No

Originators Name	Originators ID	Originators Phone	Date Initiated
Hanson, Gregory N	H0078707	(509) 376-2182	06/16/2009

SHIFT OPERATIONS REVIEW

Title

ORP Facility Representative's Monthly Report for May 2009

How Discovered		Agency	
self-ID prior to event			
Reportability	**SSC Operability**	**Operability Review**	**Comp Measures Req**
Non-Reportable	N/A	N/A	

Describe actions Taken or Recommended

No additional Base Ops Shift Office actions required at this time.

SO Reviewer Name	SO Reviewer ID	SO Reviewer Phone	SO Review Date
Johnson, Brian A	H0003531	(509) 373-2696	06/16/2009

SCREENING

PER Significance Level			
Trend Only			
Independent Assessment Review	**Occurrence Report Number**	**Externally Identified**	
No		Yes	
Assigned Responsible Manager	**Facilities Rep / SSO**	**Safety Management Rep**	
Gaydosh, William L			

Program	Safety Management Program
• N/A	• Hoisting & Rigging • Industrial Safety

PER Screening Comments

FURTHER EVALUATION: Evaluate for applicability to WPRS requirements.
cc: Tim Kramer, Ernie Hamm, Tom Mackey, John Schaleger
(Nancy Brown 06/17/09)

RE-SCREEN REQUEST (Prior to Launch):
1193 does not belong to me or WRPS. It seems that it would belong to Fluor Hanford.
(Bill Gaydosh 06/17/90)

RE-SCREEN COMMENTS: Change from Further Evaluation to Trend Only.
(Nancy Brown 06/19/09)

Causal Code

MGT/Comm/Train	**Human Performance**	**GEMS**	**Equip/Eng/Other**
Failed Barrier	**ORPS Code**	**Functional Area**	**Work Process**
	Not Applicable	Occupational Safety and Health	• Electrical Safety • Hoisting and Rigging • Vehicle Operation - Work-Related Transportation
ISMS	**Consequence Code**		
Identify and analyze hazards	• Safety Concerns - Safety concerns, suggestions, and potential safety issues		
PER Screening Chair	**PER Screening Chair ID**	**PER Screening Chair Phone**	**PER Screening Date**
Brown, Nancy L	H0088797	(509) 373-0992	06/17/2009

PAAA REVIEW

PAAA Screening	PAAA Codes	Function Codes	
Not subject to PAAA			
NTS Report Number	**NTS Report Date**		

Repetitive / Recurrent	Programmatic	Intentional Violation / Misrepresentation	
No	No	No	
PAAA Screening Comments			
PAAA Reviewer Name	**PAAA Review Date**		
Anderson, Craig E	06/17/2009		
PAAA Approver Name	**PAAA Approve Date**		
Anderson, Craig E	06/18/2009		
SENIOR MANAGEMENT REVIEW/CONCURRENCE			
TF Operations Morning Leadership Call			
Instructions for Responsible Manager			
Senior Management	**Sr Mgmt ID**	**Sr Mgmt Phone**	**Sr Mgmt Review Date**
ATTACHMENTS			
Link to PER			
AUDIT HISTORY			
Change Date	**Auditor**	**Comments**	
06/18/2009 11:11	Brown, Nancy L	'PER Screening Comments' was changed.	
06/20/2009 08:56	Brown, Nancy L	'PER Significance Level' was changed from Further Evaluation to Trend Only. 'PER Screening Comments' was changed.	

-- End of Report --
06/22/2009 11:15 AM

Task# WRPS-PER-2009-1193			
E-STARS[R] Report Task Detail Report 06/22/2009 1115			
TASK INFORMATION			
Task#	WRPS-PER-2009-1193		
Subject	TREND; ORP Facility Representative's Monthly Report for May 2009		
Parent Task#		Status	CLOSED 06/22/2009
Reference		Due	06/18/2009
Originator	^PER Coordinator	Priority	Medium
Originator Phone		Category	PER
Origination Date	06/16/2009 1220	Generic1	None
Remote Task#		Generic2	None
Deliverable	PER Review	Generic3	None
Class	None	View Permissions	Global
Instructions	*No Instructions*		
ROUTING LISTS			
1	Review Initial PER		Inactive
	Review New PER		
	• ^SO(Johnson, Brian A) - Review - Concur - 06/16/2009 1302 *Instructions:*		
	• ^PER Screening(Brown, Nancy L) - Review - Concur - 06/17/2009 1454 *Instructions:*		
	• ^Mgr Review - Review - Withdrawn - 06/18/2009 1112 *Instructions:*		
	• ^PER Screening(Brown, Nancy L) - Review - Concur - 06/20/2009 0857 *Instructions:*		
	• ^Mgr Review(Brown, Nancy L) - Review - Concur - 06/22/2009 1033 *Instructions:*		
ATTACHMENTS			
Attachments	1. Link to PER		
COMMENTS			
No Comments			

Task# WRPS-PER-2009-1193			
TASK DUE DATE HISTORY			
Modified	06/16/2009 1220 - ^PER Coordinator	New Due Date	06/18/2009 1630
SUB TASK HISTORY			
No Subtasks			
-- end of report --			

Save

Problem Evaluation Request (PER)

WRPS-PER-2009-1196
In Process/Work

PER No	Date of Discovery	Time of Discovery (24:00)	Project
WRPS-PER-2009-1196	06/16/2009	11:00	Base Ops

Location

OTHER

How Was Problem Discovered

Attending a Meeting

Description of Concern or Problem

A fact finding meeting was held on June 16th regarding the the unexpected discovery of a green sand like substance while breaking a flush water line on a rented water truck being used to flush caustic addition lines.

When the meeting was convened at 0930 it was noted that the bargaining unit personnel involved in performing the work were not present.

During the development of the time line critical inaccuracies, such as the name and craft of personnel disconnecting the lines the material was found in, were included. These were based almost entirely on the memory of a single individual who was on the scene but not one of the performing workers.

These workers had direct involvement and key information but were assigned other job duties and not available to attend the fact fining. As a result of the workers not being present, critical inaccuracies, such as the name and craft of personnel disconnecting the lines the material was found in, were included in the time line developed at the meeting.

As a secondary issues, TFC-OPS-OPER-C-14, Event Investigation Process, in section 4.2, Conduct a Fact-Finding states:

NOTE: Meetings where large groups of personnel or multiple organizations are involved should be conducted as a critique.

Representatives from Project Management, 222-S, Environmental, Safety, DOE, Operations, HAMTC, and DNFSB attended the fact finding but no involved bargaining unit were present.. If the meeting had been conducted as a critique as required by procedure, the following personnel would have been present:
• Personnel directly involved in the event
• Manager from the affected organization(s)
• Office of River Protection (ORP) and Defense Nuclear Facility Safety Board (DNFSB) representative (at their discretion)
• Subject matter experts (radiological, engineering, safety, Electrical Safety Committee member for electrical safety events, and Hoisting and Rigging Program manager for applicable events)
• HAMTC safety representative.

The failure to include personnel directly involved in the event, specifically the involved bargaining unit, is in direct conflict with TFC-OPS-OPER-C-14, Event Investigation Process. The failure to follow the procedure led to an inaccurate time lime and a potentially less than adequate fact finding.

Requirement Not Satisfied	Source Document Number
TFC-OPER-C-14,Rev D-2	
Equipment Identification Number	**System Identification**

Immediate actions Taken or Planned

Wrote per.

Recommended Corrective actions

Insure effected workers are involved when required as much as possible and not assigned other job duties as higher priority.

Originator Contact

I would like to review the the corrective actions at closure to ensure they were effective

Originators Name	Originators ID	Originators Phone	Date Initiated
Doss, Gregg C	H0070878	(509) 372-8718	06/16/2009

SHIFT OPERATIONS REVIEW

Title

Fact finding investigation into a (unexpected condition)			
How Discovered		**Agency**	
self-ID prior to event			
Reportability	**SSC Operability**	**Operability Review**	**Comp Measures Req**
Non-Reportable	N/A	N/A	
Describe actions Taken or Recommended			
No additional Base Ops Shift Office actions required at this time.			
SO Reviewer Name	**SO Reviewer ID**	**SO Reviewer Phone**	**SO Review Date**
Johnson, Brian A	H0003531	(509) 373-2696	06/16/2009
SCREENING			
PER Significance Level			
Further Evaluation			
Independent Assessment Review	**Occurrence Report Number**	**Externally Identified**	
No		No	
Assigned Responsible Manager	**Facilities Rep / SSO**	**Safety Management Rep**	
Geary, Jim			
Program		**Safety Management Program**	
• N/A		• Safety Culture (ISMS)	
PER Screening Comments			
FURTHER EVALUATION: See also WRPS-PER-2009-1192. Provide additional information from the Fact Finding for PER evaluation by the PER Screening Team. (Nancy Brown 06/17/09)			
Causal Code			
MGT/Comm/Train	**Human Performance**	**GEMS**	**Equip/Eng/Other**
Failed Barrier	**ORPS Code**	**Functional Area**	**Work Process**
	Not Applicable	Project Management	• Event Investigation
ISMS	**Consequence Code**		
Identify and analyze hazards	• Communications - Inadequate communications, roles, responsibilities		
PER Screening Chair	**PER Screening Chair ID**	**PER Screening Chair Phone**	**PER Screening Date**
Brown, Nancy L	H0088797	(509) 373-0992	06/17/2009
PAAA REVIEW			
PAAA Screening	**PAAA Codes**	**Function Codes**	
PAAA, Non-NTS Reportable	• 10 CFR 830.122 (c)(2)	• Communication • Corrective Action Program	
NTS Report Number	**NTS Report Date**		
Repetitive / Recurrent	**Programmatic**	**Intentional Violation / Misrepresentation**	
No	No	No	
PAAA Screening Comments			
PAAA Reviewer Name	**PAAA Review Date**		

Anderson, Craig E	06/17/2009		
PAAA Approver Name	**PAAA Approve Date**		
Anderson, Craig E	06/18/2009		
SENIOR MANAGEMENT REVIEW/CONCURRENCE			
TF Operations Morning Leadership Call			
N/A			
Instructions for Responsible Manager			
Review the PER Screening Tab for requested data. Complete the task in E-STARS in accordance with TFC-ESHQ-Q_C-C-01, Problem Evaluation Request.			
Senior Management	**Sr Mgmt ID**	**Sr Mgmt Phone**	**Sr Mgmt Review Date**
Brown, Nancy L	H0088797	(509) 373-0992	06/18/2009
ATTACHMENTS			
EIR-2009-013.pdf			
FW_ Recommended PER Text.msg			
Link to PER			
AUDIT HISTORY			
Change Date	**Auditor**	**Comments**	
06/17/2009 09:16	Glaman, Linda R	'Description of Concern or Problem' was changed per attached email request of the originator. LBG 6-17-09	
06/18/2009 11:56	Brown, Nancy L	Responsible Manager Task Launched by Brown, Nancy L	

-- End of Report --
07/09/2009 06:17 PM

Task# WRPS-PER-2009-1196

E-STARS[R] Report
Task Detail Report
07/09/2009 1818

TASK INFORMATION			
Task#	WRPS-PER-2009-1196		
Subject	FUR; Fact finding investigation into a (unexpected condition)		
Parent Task#		**Status**	Open
Reference		**Due**	06/25/2009
Originator	^PER Coordinator	**Priority**	Medium
Originator Phone		**Category**	PER
Origination Date	06/16/2009 1502	**Generic1**	None
Remote Task#		**Generic2**	None
Deliverable	PER Review	**Generic3**	None
Class	None	**View Permissions**	Global
Instructions	*No Instructions*		

ROUTING LISTS		
1	Responsible Manager	Active
	Review the PER Screening Tab for requested data. Complete the task in E-STARS in accordance with TFC-ESHQ-Q_C-C-01, Problem Evaluation Request.	
	• Geary, Jim - Assign - Completed with comments - 07/09/2009 1319 *Instructions:*	
	• Geary, Jim - Assign - Completed with comments - 07/09/2009 1321 *Instructions:* Did you contact the originator about the PER? Document your contact in the response window.	
2	Review Initial PER	Inactive
	Review New PER	
	• ^SO(Johnson, Brian A) - Review - Concur - 06/16/2009 1523 *Instructions:*	
	• ^PER Screening(Brown, Nancy L) - Review - Concur - 06/17/2009 1536 *Instructions:*	
	• ^Mgr Review - Review - Cancelled - 06/18/2009 1156 *Instructions:*	

ATTACHMENTS	
Attachments	1. EIR-2009-013.pdf 2. FW_ Recommended PER Text.msg 3. Link to PER

COMMENTS	
Poster	Geary, Jim (Mata, Beth L) - 07/09/2009 1319
	Completed
	F/E complete. Contacted the PER originator on 7/9/09 via phone. blm
Poster	Geary, Jim (Mata, Beth L) - 07/09/2009 1321
	Completed

Task# WRPS-PER-2009-1196

	This issue does not represent a non-compliance. As allowed in TFC-OPS-OPER-C-14, Event Investigation Process, Section 4.2, follow-up interviews with involved personnel were conducted following the fact finding meeting. It is recommended the PER be assigned to J. Geary as a PIE/CIM.

TASK DUE DATE HISTORY

Modified	06/18/2009 1156 - ^PER Coordinator	**New Due Date**	06/25/2009 1630
Modified	06/18/2009 1156 - ^PER Coordinator	**New Due Date**	06/25/2009 1630
Modified	06/16/2009 1502 - ^PER Coordinator	**New Due Date**	06/18/2009 1630

SUB TASK HISTORY

No Subtasks

-- end of report --

INTEROFFICE MEMORANDUM

washington river protection solutions

WRPS-0901120

Date: July 7, 2009

To: James E. Geary, R3-26

From: S. F. Waters, Fact-Finding Lead, Event Reporting and Investigation

Subject: FACT-FINDING EVENT INVESTIGATION REPORT EIR-2009-013, DISCOVERED GREEN GRANULAR SUBSTANCE FROM WATER SUPPLY HOSE DURING THE DEMOBILIZATION OF THE AN-106 CAUSTIC ADDITION ACTIVITY

Submitted for your information and use is the fact-finding event investigation report EIR-2009-013, *Discovered Green Granular Substance from Water Supply Hose during the Demobilization of the AN 106 Caustic Addition Activity.* The enclosed report contains the information obtained during the investigation but does not necessarily cover an exhaustive investigation of all issues.

As the responsible manager, resolution of problem evaluation request WRPS-PER-2009-1192 should include consideration of this report in the identification of the cause(s) of the event and the development and implementation of the corrective actions.

Should you have any questions or need additional information regarding this report, please contact me at 373-3457.

SFW:SFW

Enclosure (Fact-finding Event Investigation Report EIR-2009-013, Discovered Green Granular Substance from Water Supply Hose during the Demobilization of the AN-106 Caustic Addition Activity)

cc:	Anderson, Craig E	R2-50	Johnson, Gloria J	H6-18
	Beranek, Fred	R2-50	Kennedy, Edward E	H6-63
	Berman, Herbert S	R2-58	Lindholm, Mark A	S7-83
	Brosee, Neil	R2-50	Linzau, William M	S7-04
	Brown, Robert L	R2-50	Maciuca, Tino	R2-87
	Doss, Gregg C	S5-03	Rueter, Kenneth J	H6-02
	Frink, Ronald L	H6-60	Sax, Scott M	H6-63
	Holloway, Jerry N	H6-04		

RECEIVED
JUL 07 2009
WRPS
CORRESPONDENCE CONTROL

WRPS-0901120

Enclosure

FACT-FINDING EVENT INVESTIGATION REPORT
EIR-2009-013

DISCOVERED GREEN GRANULAR SUBSTANCE FROM WATER SUPPLY HOSE DURING THE DEMOBILIZATION OF THE AN-106 CAUSTIC ADDITION ACTIVITY

Consisting of 11 pages
Including cover sheet

FACT-FINDING REPORT

Discovered Green Granular Substance from Water Supply Hose during the Demobilization of the AN-106 Caustic Addition Activity

Event Investigation Report No. EIR-2009-013

Shaun F. Waters
Fact-Finding Lead

6/29/09
Date

James E. Geary
PER Responsible Manager

7/5/09
Date

PER No. WRPS-PER-2009-1192

Discovered Green Granular Substance from Water Supply Hose during the Demobilization of the AN-106 Caustic Addition Activity

Event Summary

On June 11, 2009, during the demobilization of the AN-106 caustic addition activity per TO-020-938, revision A-1, a green granular substance was found on the ground (Attachment 1) after the water supply hose from the water truck (Attachment 2) was disconnected from the Hale in-line booster pump. Upon discovery of the green granular substance, the shift office was notified, the area was barricaded and notifications were made. A sample of the substance was obtained and sent to the 222-S labs were it was analyzed on swing shift of June 11 (Attachment 3).

The water truck (approximately 1000 gallon capacity) is used to supply flush water for the caustic skid at the completion of each caustic addition. The rental company indicates this water truck was used by an environmental agency 9-30-08 to 10-06-08 in hydroseeding for soil stabilization. The material used is called Soiltac®. A Material Safety Data Sheet is available on the company's website at www.soiltac.com.

The result of the analysis determined that the substance was a mixture of rust, some of it in the form of a non-crystalline green ferrous chloride and mineral matter that is rich in Serpentine. The analysis found no evidence of organic material or heavy metals.

On June 16, 2009, a fact-finding was convened (Attachment 4).

Event Timeline

NOTE: All times are approximate.

<u>6-1-2009</u>

Obtained rented water truck from Total Site Services LLC and staged across from AN Farm.

<u>6-3/4-2009</u>

Truck drivers were provided keys to the water truck for familiarization. The drivers filled water truck tank using the fill station west of East Area. The drivers then proceeded to a dirt road west of 272-WA stating they had observed "brown mucky water with a greenish tinge" while testing the water truck's water spray system. The drivers emptied the water truck's tank and staged the water truck across from AN Farm.

6-8-2009

The water truck was taken to an off-site vendor to fill with 100 degree Fahrenheit water and staged, along with other equipment to support caustic addition activities at AN Farm, upon return.

6-9-2009

0930 The first of three vendor chemical tank trucks (caustic truck) arrives. Crew connects caustic truck to system as prescribed in TO-020-938 and beings unloading caustic to tank AN-106.

1130 Addition of caustic to tank AN-106 is complete and caustic truck verified empty.

1315 Caustic flush activities started. Approximately 200 gallons of water used to flush.

1530 Flush activities completed and flush tee disconnect from the caustic truck.

6-10-2009

0900 The second and third caustic trucks arrive. Crew connects caustic truck to system as prescribed in TO-020-938 and beings unloading caustic to tank AN-106.

0930 The second caustic truck is connected as prescribed in TO-020-938 and caustic unloading to tank AN-106 beings.

1130 Addition of caustic to tank AN-106 is complete and caustic truck verified empty. Caustic flush activities started. Approximately 200 gallons of water used to flush.

1230 The third caustic truck is connected as prescribed in TO-020-938 and caustic unloading to tank AN-106 beings.

1430 Addition of caustic to tank AN-106 is complete and caustic truck verified empty. Caustic flush activities started. Approximately 300 gallons of flush water used for final flush.

1530 Flush activities completed and flush tee disconnect.

1600 Work complete and post-job performed.

6-11-2009

0730 Pre-job for restoration and demobilization of equipment conducted.

NOTE Restoration and demobilization of the caustic and water lines ran in parallel.

Caustic Side

0900 pH test of the disconnect hose at tank AN-106 riser was approximately 9 (TO-020-938 stipulates additional flushes if the pH is greater than 8). Hose reconnected and an additional 200 gallon flush followed by a three minute air blow down of line.

0945 pH test of the disconnect hose at tank AN-106 riser was approximately 13 (the pH test was conducted twice with both result indicating a pH of 13).

An attempt to contact the engineer was unfruitful and caustic line reconnected to riser.

Crew then moved to disconnecting the caustic hose (approximately 25 foot hose) from the flush tee to the caustic skid. pH was below 7 and hose ends were bagged.

Crew then moved to disconnecting the caustic hoses (two sections) between the caustic skid and the riser. pH of hoses was below 7 thought the riser end of hose was not pH test during this evolution. Riser end of hose was double bagged.

Caustic skid and flush tee are isolated.

Water Side

1030 A pipefitter disconnected the hose between the water truck and the Hale pump; truck end first then pump end. As the pipefitter rolled the hose from the truck to the pump, he noticed a green granular substance came out of the end of the hose. He stopped and informed the Field Work Supervisor what he saw.

Shift manager and safety notified. Shift manager notified environmental.

With safety and environmental representatives at the scene, the area around the green granular substance was barricaded:

- pH of material less than 7
- Radiological survey indicated no radiation/contamination

Collection of a sample of the green granular substance initiated.

1230 Sample container obtained and sample of the green granular substance collected with workers wearing gloves for PPE with concurrence from safety and environmental.

1445 Sample of green granular substance delivered to 222-S Laboratory for analysis.

1900 Analysis complete and results provided to Operations.

Attachments:

1. Spill Area - 241-AN Court Yard
2. Rental Water Truck
3. Sample - Green Granular Substance
4. 241-AN Caustic Addition Diagram
5. Event Investigation/Critique Attendance Form

ATTACHMENT 1

Spill Area - 241-AN Court Yard

ATTACHMENT 2

Rental Water Truck

ATTACHMENT 5

Event Investigation/Critique Attendance Form

ATTACHMENT 4

241-AN Caustic Addition Diagram

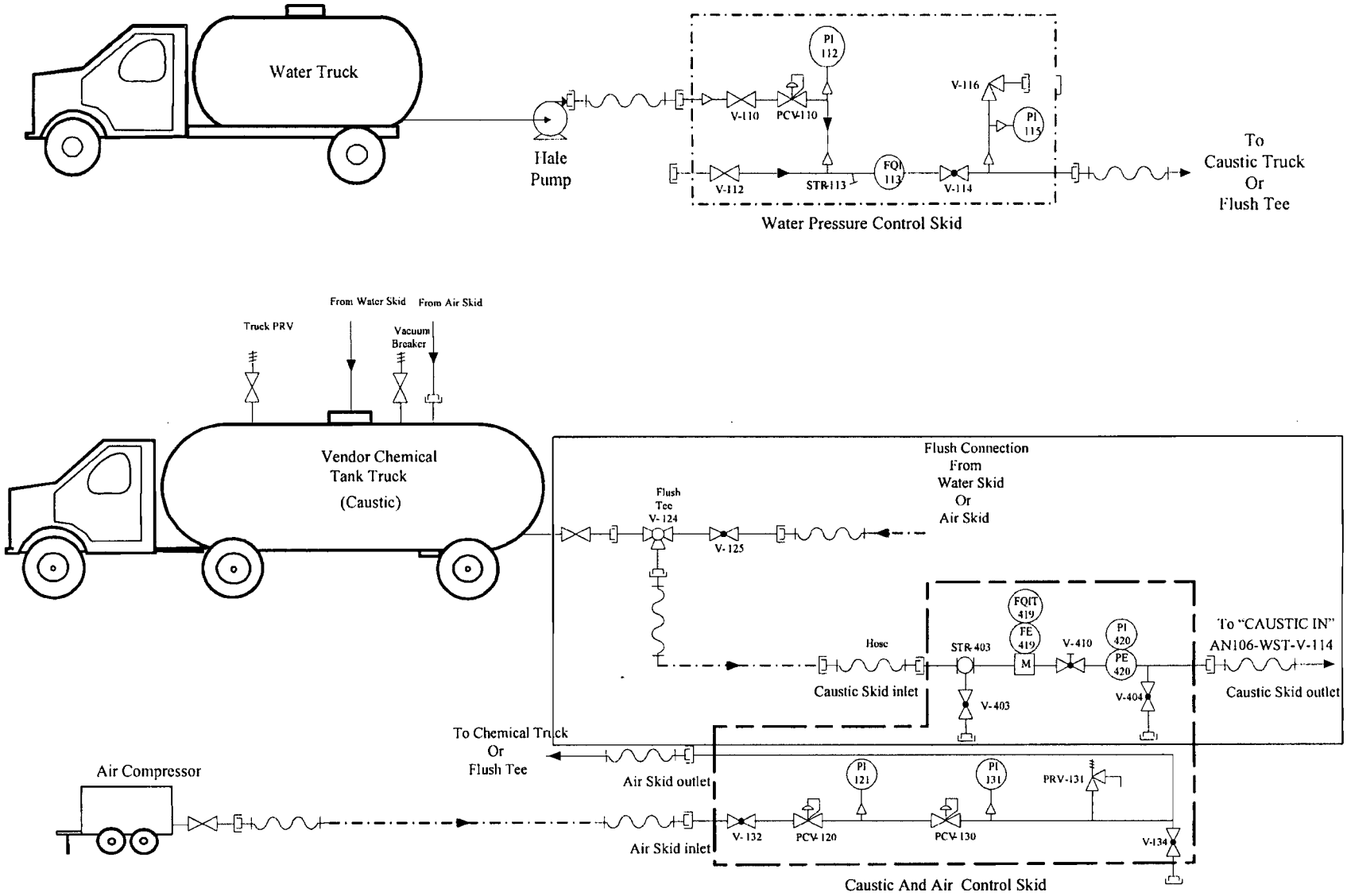

ATTACHMENT 5

Event Investigation/Critique Attendance Form

Date 6/16/09	EVENT INVESTIGATION/CRITIQUE ATTENDANCE FORM		
Critique Title: Sediment in Rented Water Truck			
Critique Number EIR-2009-013			
Print Name	Signature	Payroll Number/ SSN	Organization
Shaun Waters	[illegible]	[redacted]	SEERIP
Gregg Doss	[illegible]	[redacted]	HAMTC/Safety
MARK R. STEELMAN	Mark R. Steel	[redacted]	ISMS Phase II
Jim GEARY	[illegible]	[redacted]	B.O. PROJECTS
Rich Gutierrez	[illegible]	[redacted]	Base Ops
TED DAVIS	[illegible]	[redacted]	DASF OPS
Bill LINZAU	[illegible]	[redacted]	DNFSB S.R.
LISA DOMNOSKE-RAUCH	[illegible]	[redacted]	DOE/ORP
Beth Mata	[illegible]	[redacted]	WRPS/Tech spt.
RON FRINK	[illegible]	[redacted]	ORP
Lina Pacheco	[illegible]	[redacted]	ORP
BILL POWELL	[illegible]	[redacted]	WRPS/PED.
GARY A. Cooke	[illegible]	[redacted]	WRPS/2225 LAB
JIM L. CASTLEBERRY	[illegible]	[redacted]	WRPS/PROJ.
Lonnie Flowers	[illegible]	[redacted]	WRPS/Safety
Mark Cranston	Mark Cranston	[redacted]	WRPS/IH/IS

A-6003-100 (05/01)

Message

From: Doss, Greggory C
Sent: Wednesday, June 17, 2009 9:06 AM
To: Glaman, Linda; Brower, Nancy E
Subject: FW: Recommended PER Text

Linda and Nancy,
I missed some critical information for PER 2009-1196 and would like to remove the text under Description of concern or problem. I would like to add all of the text listed below. All other sections remain the same. Please let me know if there is a problem with this.
Thank you

Gregg Doss
HAMTC Safety Representative
phone 372-8718
cell 438-1536
page 85-6213

Do not let what you cannot do interfere with what you "can do".

A fact finding meeting was held on June 16th regarding the the unexpected discovery of a green sand like substance while breaking a flush water line on a rented water truck being used to flush caustic addition lines.

When the meeting was convened at 0930 it was noted that the bargaining unit personnel involved in performing the work were not present.

During the development of the time line critical inaccuracies, such as the name and craft of personnel disconnecting the lines the material was found in, were included. These were based almost entirely on the memory of a single individual who was on the scene but not one of the performing workers.

These workers had direct involvement and key information but were assigned other job duties and not available to attend the fact fining. As a result of the workers not being present, critical inaccuracies, such as the name and craft of personnel disconnecting the lines the material was found in, were included in the time line developed at the meeting.

As a secondary issues, TFC-OPS-OPER-C-14, Event Investigation Process, in section 4.2, Conduct a Fact-Finding states:

> **NOTE: Meetings where large groups of personnel or multiple organizations are involved should be conducted as a critique.**

Representatives from Project Management, 222-S, Environmental, Safety, DOE, Operations, HAMTC, and DNFSB attended the fact finding but no involved bargaining unit were present.. If the meeting had been conducted as a critique as required by procedure, the following personnel would have been present:

- **Personnel directly involved in the event**
- **Manager from the affected organization(s)**
- **Office of River Protection (ORP) and Defense Nuclear Facility Safety Board (DNFSB) representative (at their discretion)**
- **Subject matter experts (radiological, engineering, safety, Electrical Safety Committee member for electrical safety events, and Hoisting and Rigging Program manager for applicable events)**
- **HAMTC safety representative.**

The failure to include personnel directly involved in the event, specifically the involved bargaining unit, is in direct conflict with TFC-OPS-OPER-C-14, Event Investigation Process. The failure to follow the procedure led to an inaccurate time lime and a potentially less than adequate fact finding.

Save

Problem Evaluation Request (PER)

WRPS-PER-2009-1228
In Process/Work

PER No	Date of Discovery	Time of Discovery (24:00)	Project
WRPS-PER-2009-1228	06/23/2009	10:30	Base Ops

Location

All Tank Farms

How Was Problem Discovered

Field Observation

Description of Concern or Problem

Worker brought to my attention that we still have not completed the characterization / documentation on the DSTs so that we can down post the VCZs a s they do in the SST.

Requirement Not Satisfied	Source Document Number
Hazard Identification	
Equipment Identification Number	**System Identification**

Immediate actions Taken or Planned

Documented a PER

Recommended Corrective actions

Finish characterization and documentation and make TVIS the same DST/SST for down posting of VCZs.

Originator Contact

I would like to review the the corrective actions at closure to ensure they were effective

Originators Name	Originators ID	Originators Phone	Date Initiated
Slaugh, Don M	H0036458	(509) 373-3298	06/23/2009

SHIFT OPERATIONS REVIEW

Title

Have not completed the characterization / documentation on the DSTs so that we can down post the VCZs

How Discovered	Agency
self-ID prior to event	

Reportability	SSC Operability	Operability Review	Comp Measures Req
Non-Reportable	N/A	N/A	

Describe actions Taken or Recommended

No additional actions taken or recommended by Base Ops SO

SO Reviewer Name	SO Reviewer ID	SO Reviewer Phone	SO Review Date
Strasser, David W	H0075556	(509) 373-2689	06/23/2009

SCREENING

PER Significance Level			
TUF			
Independent Assessment Review	**Occurrence Report Number**	**Externally Identified**	
No		No	
Assigned Responsible Manager	**Facilities Rep / SSO**	**Safety Management Rep**	
Jones, Mark W			

Program	Safety Management Program
• N/A	• Industrial Hygiene • Safety Culture (ISMS)

PER Screening Comments

FURTHER EVALUATION: Is the characterization/documentation of the DSTs scheduled or on-going? Provide PER Screening recommendations.
(Nancy Brown 06/24/09)

RESCREEN REQUEST: (FUR) Posted By: Jones, Mark W 07/02/2009 1505

Sampling was completed this spring during an outage of 702 AZ stack. The results of this sampling were recently received and the industrial hygienist on the project is reviewing the data. When the review is complete, a report will be written which will summarize the findings and make recommendations. This report and the related Chemical Exposure Hazard Analysis (CEHA) should be completed by July 10, 2009.

In addition, the CVST is in the process of establishing a sub-team to review this data and determine its applicability to the other DSTs. Sub-team members are Eric Hudspeth, Mike Weil, Rocky Brooks, James Bingham, Pete Graham, Don Slaugh, Mike Zabel, Kim Roueche, and Mike Crockett.

No further action is required because these actions will be tracked by the CVST.

Concurrence was received by the originator verbally on 07/01/09.
MWJ - 07/02/09

RE-SCREEN COMMENTS: Change from F/E to TUF to track the CVST completion.
(Nancy Brown 07/08/09)

Causal Code

MGT/Comm/Train	**Human Performance**	**GEMS**	**Equip/Eng/Other**
Failed Barrier	**ORPS Code**	**Functional Area**	**Work Process**
	Not Applicable		• ALARA Concerns (not RadCon) • Hazard Communication
ISMS	**Consequence Code**		
Identify and analyze hazards	• Safety Concerns - Safety concerns, suggestions, and potential safety issues		
PER Screening Chair	**PER Screening Chair ID**	**PER Screening Chair Phone**	**PER Screening Date**
Brown, Nancy L	H0088797	(509) 373-0992	06/24/2009

PAAA REVIEW

PAAA Screening	**PAAA Codes**	**Function Codes**	
PAAA, Non-NTS Reportable	• 10 CFR 851.21 (a)(1)	• Existing Workplace Hazard Identification	
NTS Report Number	**NTS Report Date**		
Repetitive / Recurrent	**Programmatic**	**Intentional Violation / Misrepresentation**	
No	No	No	

PAAA Screening Comments

PAAA Reviewer Name	**PAAA Review Date**	
Anderson, Craig E	06/25/2009	
PAAA Approver Name	**PAAA Approve Date**	
Anderson, Craig E	06/25/2009	

SENIOR MANAGEMENT REVIEW/CONCURRENCE			
TF Operations Morning Leadership Call			
N/A			
Instructions for Responsible Manager			
Review the PER and determine action required. Complete action and enter statement on TUF tab. 'Complete' the task in E-STARS in accordance with TFC-ESHQ-Q_C-C-01, Problem Evaluation Request.			
Senior Management	**Sr Mgmt ID**	**Sr Mgmt Phone**	**Sr Mgmt Review Date**
Brown, Nancy L	H0088797	(509) 373-0992	07/09/2009

Track Until Fixed (TUF)
Action Taken

ATTACHMENTS
Link to PER

AUDIT HISTORY		
Change Date	**Auditor**	**Comments**
06/25/2009 06:44	Anderson, Craig E	PAAA Screening Changed PAAA Codes Changed PAAA Function Codes Changed
06/25/2009 13:27	Brown, Nancy L	Responsible Manager Task Launched by Brown, Nancy L
07/07/2009 16:05	Glaman, Linda R	'PER Screening Comments' was changed.
07/08/2009 13:19	Brown, Nancy L	'PER Significance Level' was changed from Further Evaluation to TUF. 'PER Screening Comments' was changed.
07/09/2009 13:43	Brown, Nancy L	'Instructions for Responsible Manager' was changed.

-- End of Report --
07/09/2009 06:19 PM

Save

Problem Evaluation Request (PER)

WRPS-PER-2009-0959
In Process/Work

PER No	Date of Discovery	Time of Discovery (24:00)	Project
WRPS-PER-2009-0959	05/13/2009	10:30	ATS/222-S

Location

222S

How Was Problem Discovered

Assessment

Description of Concern or Problem

During a MOP assessment I discovered that the tuning solution used for the semi-volatile organics analysis on thermal desorption tubes was expired. The tuning solution had been used even though it had expired in December 2007.

Requirement Not Satisfied	Source Document Number
Standards and reagents, used to generate data reported to clients, are not used beyond expiration dates.	ATS-MP-1015

Equipment Identification Number	System Identification
N/A	

Immediate actions Taken or Planned

Analyst will not use the expired standard. Also, Laboratory Manager notified.

Recommended Corrective actions

Recommend assigning as a PER with resolution to Cary Seidel.

Originator Contact

I would like to help define the problem

Originators Name	Originators ID	Originators Phone	Date Initiated
Clark, Glen A	H0103701	(509) 373-1790	05/13/2009

SHIFT OPERATIONS REVIEW

Title

Tuning Solution for Semi-Volatile Organics Analysis Expired

How Discovered	Agency
self-ID prior to event	

Reportability	SSC Operability	Operability Review	Comp Measures Req
Non-Reportable	N/A	N/A	

Describe actions Taken or Recommended

No additional actions recommended.

SO Reviewer Name	SO Reviewer ID	SO Reviewer Phone	SO Review Date
Brey, Steve L	H0062556	(509) 373-2960	05/19/2009

SCREENING

PER Significance Level	
PER with Resolution	

Independent Assessment Review	Occurrence Report Number	Externally Identified	
No		No	

Assigned Responsible Manager	Facilities Rep / SSO	Safety Management Rep	
Seidel, Cary M		Shugars, David L	

Program	Safety Management Program
• N/A	• Quality Assurance

PER Screening Comments

Formal Apparent Cause Analysis: Issue represents continuted use of an expired standard for over a year. L Glaman 5-20-09			
Causal Code			
A3B1C03	Human Performance LTA Skill Based Error Incorrect performance due to mental lapse		
A5B2C03	Communications LTA Written Communications Content LTA Data/computations wrong/incomplete		
MGT/Comm/Train	**Human Performance**	**GEMS**	**Equip/Eng/Other**
Failed Barrier	**ORPS Code**	**Functional Area**	**Work Process**
	Not Applicable	Analytical Chemistry	• Analytical Standards Preparation
ISMS	**Consequence Code**		
Perform work within the controls	• Calibration Standard - Calibration standard failed, expired, or otherwise LTA • Qualification Requirements Not Met - Person performed activity without meeting qualification requirements • Reagent Quality - Reagent Quality or Purity Issue, Chemical/Gas/apparatus		
PER Screening Chair	**PER Screening Chair ID**	**PER Screening Chair Phone**	**PER Screening Date**
Glaman, Linda R	H0060893	(509) 376-1776	05/20/2009
PAAA REVIEW			
PAAA Screening	**PAAA Codes**	**Function Codes**	
PAAA, Non-NTS Reportable	• 10 CFR 830.122 (e)(1)	• M&TE (control and calibration) • Sample Control	
NTS Report Number	**NTS Report Date**		
Repetitive / Recurrent	**Programmatic**	**Intentional Violation / Misrepresentation**	
No	No	No	
PAAA Screening Comments			
PAAA Reviewer Name	**PAAA Review Date**		
Anderson, Craig E	05/20/2009		
PAAA Approver Name	**PAAA Approve Date**		
Anderson, Craig E	05/21/2009		
SENIOR MANAGEMENT REVIEW/CONCURRENCE			
TF Operations Morning Leadership Call			
N/A			
Instructions for Responsible Manager			
Review the PER Screening Tab for requested data. Complete the task in E-STARS in accordance with TFC-ESHQ-Q_C-C-01, and TFC-ESHQ-Q_ADM-C-12 Apparent Cause Analysis & Corrective Action Planning.			
Senior Management	**Sr Mgmt ID**	**Sr Mgmt Phone**	**Sr Mgmt Review Date**
Brown, Nancy L	H0088797	(509) 373-0992	05/21/2009
CAUSE ANALYSIS			

Description of Occurrence

During performance of MOP-FY09-ISMS-014 it was discovered that the primary standard used to prepare a secondary diluted standard was expired. This diluted standard solution was used to perform the semi-volatile organics analysis on thermal desorption tubes. ATS-MP-1015 states that standards and reagents used to generate data reported to clients are not used beyond expiration dates.

Extent of Condition

The individual knew the appropriate steps related to the process for creating the diluted solution but inattention caused a failure to check the expiration date before continuing with use. Considering the number of company communications regarding self-checking and requirements to adhere to the requirements of all procedures, additional communication beyond the individual in the case does not appear to be warranted.

Safety Significance

There was no actual or potential effect to personnel, equipment or the environment. The tuning standard cannot fail in such a way as to generate false data because calibration standards would have failed and stopped analysis.

Generic Implications

Remedial Corrective Action

The importance of checking the expiration dates on the standards prior to use was emphasized with the Scientific Technician.
Completed by the Analytical Process Development manager on 5/13/09

The expired standard was disposed of and replaced with an unexpired standard.
Completed by the Scientific Technician on 5/13/09

Reviewed impact to equipment and data and determined that data and equipment were not affected.
Completed by the Analytical Process Development manager and the Scientific Technician on 5/14/09

WRPS-PER-2009-1235 was initiated to address the issue with regard to the inconsistent entry of chemicals into the CITS database.
Completed by Tina Spadoni on 6/24/09

Causal Analysis, Apparent Cause and/or Root Cause Analysis

WHY Analysis:
A Standard used to generate data reported to a client was used beyond the expiration date.

The diluted standard solution used to perform semi-volatile organic analysis on thermal desorption tubes was determined to be expired.

Assessor discovered that the primary standard used to prepare the secondary diluted standard was expired.

The Scientific Technician forgot to check the standards expiration date prior to use.

Summary:
Inattention caused the Scientific Technician to forget to check the expiration date on the standard prior to using it to create a secondary diluted standard. One on one discussion with the Scientific Technician reinforced the importance of checking expiration dates prior to use.

In addition, an Expired Chemicals report dated 4/28/09 from the Chemical Inventory Tracking System (CITS) was used to identify and initiate disposal of expired chemicals in 4QR and 4TUV. This report did not list the standard in question and so it was not identified for disposal. A PER was initiated to address the issue with regard to the inconsistent entry of chemicals into the CITS database. A worker assessment has also been scheduled for FY-2010 to review the Chemical Management Program and identify any opportunities for improvement.

CORRECTIVE ACTIONS

Actionee	Action Due Date	E-STARS Number
Jewett, James R	01/29/2010	

Action

Perform an assessment of the Chemical Management Program to determine if opportunities for improvement exist.

Corrective Action Attachments

ATTACHMENTS

Link to PER		
MOP-FY09-ISMS-014 - Implementation of 222-S QA Plan.pdf		
WRPS-PER-2009-0959 - Originator Concurrence.msg		
AUDIT HISTORY		
Change Date	**Auditor**	**Comments**
05/21/2009 10:54	Brown, Nancy L	Responsible Manager Task Launched by Brown, Nancy L
07/06/2009 15:35	Alexander, Sandy K	Change to Cause Analysis screen/Corrective Action plan.
07/06/2009 15:37	Alexander, Sandy K	Change to Cause Analysis screen/Corrective Action plan.
07/07/2009 10:19	Alexander, Sandy K	'Remedial Corrective Action' was changed.

-- End of Report --
07/09/2009 05:04 PM

Task# WRPS-PER-2009-0959

E-STARS[R] Report
Task Detail Report
07/09/2009 1704

TASK INFORMATION			
Task#	WRPS-PER-2009-0959		
Subject	RES; Tuning Solution for Semi-Volatile Organics Analysis Expired		
Parent Task#		**Status**	Open
Reference		**Due**	07/01/2009
Originator	^PER Coordinator	**Priority**	Medium
Originator Phone		**Category**	PER
Origination Date	05/13/2009 1209	**Generic1**	None
Remote Task#		**Generic2**	None
Deliverable	PER Review	**Generic3**	None
Class	None	**View Permissions**	Global
Instructions	*No Instructions*		

ROUTING LISTS		
1	Responsible Manager	Active
	Review the PER Screening Tab for requested data. Complete the task in E-STARS in accordance with TFC-ESHQ-Q_C-C-01, and TFC-ESHQ-Q_ADM-C-12 Apparent Cause Analysis & Corrective Action Planning.	
	• Seidel, Cary M - Assign - Completed with comments - 06/25/2009 1223 *Instructions:*	
	• Seidel, Cary M - Assign - Completed with comments - 06/25/2009 1226 *Instructions:* Did you contact the originator about the PER? Document your contact in the response window.	
	• Seidel, Cary M - Assign - Completed with comments - 07/06/2009 1545 *Instructions:* This PER must remain open until the planned assessment is performed in 2010. Also, the action to track performance of the assessment should be an ESTARS item associated with this PER.	
	• Seidel, Cary M - Assign - Completed with comments - 07/07/2009 1004 *Instructions:* Cary, please talk with Glen Clark on this	
	• Shugars, David L - Review - Concur - 07/07/2009 1318 *Instructions:* Safety Management Representative Review	
2	Review Initial PER	Inactive
	Review New PER	
	• ^SO(Brey, Steve L) - Review - Concur - 05/19/2009 0849 *Instructions:*	
	• ^PER Screening(Glaman, Linda R) - Review - Concur - 05/20/2009 1311 *Instructions:*	
	• ^Mgr Review - Review - Cancelled - 05/21/2009 1054 *Instructions:*	

ATTACHMENTS	
Attachments	1. Link to PER 2. MOP-FY09-ISMS-014 - Implementation of 222-S QA Plan.pdf 3. WRPS-PER-2009-0959 - Originator Concurrence.msg

Task# WRPS-PER-2009-0959

COMMENTS	
Poster	Seidel, Cary M - 06/25/2009 1223
	Completed
	The Apparent Cause Analysis & Corrective Action Planning has been completed. A QA accessment of the chemical management system has been requested.
Poster	Seidel, Cary M - 06/25/2009 1226
	Completed
	Apparent Cause Analysis & Corrective Action Planning has been completed. A QA accessment of the chemical management system has been scheduled. The originator played a major role in the cause analysis and corrective action planning.
Poster	Seidel, Cary M (Alexander, Sandy K) - 07/06/2009 1545
	Completed
	The action to perform an assessment has been added to the corrective action plan on the PER. PER will not be closed until the assessment has been completed. Please launch one corrective action.
Poster	Seidel, Cary M (Alexander, Sandy K) - 07/07/2009 1004
	Completed
	The action to perform an assessment has been added to the corrective action plan on the PER. PER will not be closed until the assessment has been completed. Please launch one corrective action.

TASK DUE DATE HISTORY

Modified	05/21/2009 1054 - ^PER Coordinator	**New Due Date**	07/01/2009 1630
Modified	05/21/2009 1054 - ^PER Coordinator	**New Due Date**	06/27/2009 1630
Modified	05/13/2009 1209 - ^PER Coordinator	**New Due Date**	05/15/2009 1630

SUB TASK HISTORY

No Subtasks

-- end of report --

WRPS ISMS Phase II
Management Observation Program
Assessment Report

Assessment Number:	MOP-FY09-ISMS-014	Title/Activity:	Implementation of 222-S Laboratory QA Plan

Criterion#	N/A	Criterion:	N/A

Approach: ☒ **Document Review** **X Interview** **X Activity Observation**

Assessor(s)/Team Member(s):	Glen Clark		
Assessment Dates:	April 23 – May 14, 2009		
Program/ Project:	222-S Laboratory		
Documents Reviewed:	RPP-MP-003, ISMS Description for TOC, Revision 6		
Interviews Conducted:	Wade Warrant, Cary Seidel, Keith Fuller, Jerry Kunkel, Jann Frye, Amber Biggs, Steven Davis		
Activities Observed:	Sample internal Chain-of-Custody		
Summary/Discussion of Results:	ATS-MP-1032, *222-S Laboratory QA Plan*, incorporates the flow down of the TFC-PLN-02, *Quality Assurance Program Description*, requirements as applied to an analytical laboratory. All assigned personnel have completed the required reading of the current revision of ATS-MP-1032. The assessor evaluated the implementation of ATS-MP-1032 in the areas of personnel qualification and training, internal Chain-of-Custody, chemical standards, calibration of analytical balances, control charts, QA program assessments, and test planning. Completed Qualification Cards are being maintained in the training organization, while only OJT training documentation is maintained at 222-S Laboratory. The Qualification Card (222-S Process Development Chemist/Scientist) for James Duncan was reviewed and found to be complete. OmniLIMS and hard copy Login/Logout sheets are being used to document internal Chain-of-Custody. The calibration, internal standards, and tuning solution standards used for organics TDU analysis were reviewed and found to be within expiration dates except for the tuning solution used for the analysis of semi-volatiles on TDUs. The assessor generated a PER, referenced below, to document the issue of the expired tuning solution. The calibration stickers for the two analytical balances in 222-SA were reviewed and found to be complete and the balance calibrations current and within expiration. Control charts were last updated about December 2008. An independent assessment of the 222-S Laboratory QA program was not completed in FY2008 because of transition activities to WRPS, however, an independent assessment has been scheduled for august of this fiscal year. Test plans/test procedures are issued through the document control system as either internal memorandums or as engineering documents. Also, WRPS-PER-2009-0746, was reviewed, which had been written recently by the Analytical Process Development Team Lead, to address the use of some TDU sample tubes that had been used more than the procedurally (IH-LT-549-150) allotted twenty times. Implementation of the corrective actions in the documentation of the PER should preclude this from occurring again.		
Noteworthy Practices/ Strengths:			
Opportunities for Improvement:			
Criterion Satisfied:	X Yes ☐ No	**If No, Note Why:**	All reviewed criteria satisfied except for the use of an expired tuning solution.
PER(s) Issued:	X Yes No	**PER Number(s):**	WRPS-PER-2009-0959

WRPS ISMS Phase II
Management Observation Program
Assessment Report

Assessment Number:	MOP-FY09-ISMS-014	Title/Activity:	Implementation of 222-S Laboratory QA Plan

Remedial Actions:	Laboratory personnel to discontinue using the expired tuning solution and the Laboratory Manager notified of the situation.
Conclusions:	The assessor found that all reviewed areas were compliant with ATS-MP-1032 and were being implemented satisfactorily, except for the use of the expired tuning solution.
Recommendations:	To facilitate the generation of control charts, the assessor recommends that 222-S Process Development Chemists/Scientists use NorthWest Analytical (NWA) software in OmniLIMS to generate control charts instead of excel spreadsheets.

Review and Approval:	*This report has been reviewed and approved by the SMP Owner/Line Manager.*	
Name	**Signature**	**Date**
Glen A. Clark	Glen A. Clark	5/14/09

(Revised: (3/26/09)

Message

From: Clark, Glen A
Sent: Thursday, June 25, 2009 10:01 AM
To: Alexander, Sandy K
Cc: Seidel, Cary M; Kunkel, Jerry M
Subject: RE: WRPS-PER-2009-0959 - Please Review Causal Analysis Tab

I concur

From: Alexander, Sandy K
Sent: Thursday, June 25, 2009 9:49 AM
To: Seidel, Cary M; Kunkel, Jerry M; Clark, Glen A
Subject: WRPS-PER-2009-0959 - Please Review Causal Analysis Tab

Link To – WRPS-PER-2009-0959

Please review the information provided in the Causal Analysis Tab and attachments, let me know if you concur with information as is.

The PER concerning inconsistent entry of information into CITS was initiated by Tina Spadoni and I thought it would fit in with this resolution – let me know what you think.

If any changes are needed, please let me know.

Thank You,
Sandy Alexander
373-0064

Task# WRPS-PER-2009-1228

E-STARS[R] Report
Task Detail Report
07/09/2009 1820

TASK INFORMATION			
Task#	WRPS-PER-2009-1228		
Subject	TUF; Have not completed the characterization / documentation on the DSTs so that we can down post the VCZs		
Parent Task#		**Status**	Open
Reference		**Due**	11/09/2009
Originator	^PER Coordinator	**Priority**	Medium
Originator Phone		**Category**	PER
Origination Date	06/23/2009 1031	**Generic1**	None
Remote Task#		**Generic2**	None
Deliverable	PER Review	**Generic3**	None
Class	None	**View Permissions**	Global
Instructions	*No Instructions*		

ROUTING LISTS

1	Responsible Manager	Active
	Review the PER and determine action required. Complete action and enter statement on TUF tab. 'Complete' the task in E-STARS in accordance with TFC-ESHQ-Q_C-C-01, Problem Evaluation Request.	
	• Jones, Mark W - Assign - Completed with comments - 07/02/2009 1505 *Instructions:*	
	• Jones, Mark W - Assign - Completed with comments - 07/02/2009 1506 *Instructions:* Did you contact the originator about the PER? Document your contact in the response window.	
	• ^PER Screening(Brown, Nancy L) - Review - Concur - 07/08/2009 1319 *Instructions:*	
	• ^Mgr Review(Brown, Nancy L) - Review - Concur - 07/09/2009 1333 *Instructions:*	
	• Jones, Mark W - Assign - Awaiting Response - Due Date - 11/09/2009 1630 *Instructions:*	
2	Review Initial PER	Inactive
	Review New PER	
	• ^SO(Strasser, David W) - Review - Concur - 06/23/2009 1158 *Instructions:*	
	• ^PER Screening(Brown, Nancy L) - Review - Concur - 06/24/2009 1502 *Instructions:*	
	• ^Mgr Review - Review - Cancelled - 06/25/2009 1327 *Instructions:*	

ATTACHMENTS

Attachments	1. Link to PER

COMMENTS

Poster	Jones, Mark W - 07/02/2009 1505

Task# WRPS-PER-2009-1228

	Completed
	Sampling was completed this spring during an outage of 702 AZ stack. The results of this sampling were recently received and the industrial hygienist on the project is reviewing the data. When the review is complete, a report will be written which will summarize the findings and make recommendations. This report and the related Chemical Exposure Hazard Analysis (CEHA) should be completed by July 10, 2009. In addition, the CVST is in the process of establishing a sub-team to review this data and determine its applicability to the other DSTs. Sub-team members are Eric Hudspeth, Mike Weil, Rocky Brooks, James Bingham, Pete Graham, Don Slaugh, Mike Zabel, Kim Roueche, and Mike Crockett. No further action is required because these actions will be tracked by the CVST" Concurrence was received by the originator verbally on 07/01/09 MWJ - 07/02/09
Poster	Jones, Mark W - 07/02/2009 1506
	Completed
	Concurrence was received by the originator verbally on 07/01/09 MWJ - 07/02/09

TASK DUE DATE HISTORY

Modified	07/09/2009 1341 - ^PER Coordinator (Brown, Nancy L)	**New Due Date**	11/09/2009 1630
Modified	06/25/2009 1327 - ^PER Coordinator	**New Due Date**	07/02/2009 1630
Modified	06/25/2009 1327 - ^PER Coordinator	**New Due Date**	07/02/2009 1630
Modified	06/23/2009 1031 - ^PER Coordinator	**New Due Date**	06/25/2009 1630

SUB TASK HISTORY

No Subtasks

-- end of report --