Document title: **Hazard Analysis Report**

Contract number: DE-AC27-01RV14136

Department: Environmental, Safety, and Health

Document number: BNFL-5193-HAR-01, Rev 3

Date of issue: 21 September 2001

Issue status: Approved

River Protection Project
Waste Treatment Plant
3000 George Washington Way
Richland, WA 99352
United States of America
Tel: 509 371 3500
Fax: 509 371 3504

History Sheet

Rev	Date	Reason for revision	Revised by
0-1	-	Issued under previous contract	-
1A	1 Feb 2001	Revised to reflect contractor change from CHG to BNI Ref: ABCN-W375-01-00053	L Dougherty
2	20 Apr 2001	Issued approved document following approval by OSR of ABCN-W375-00-00053 changes. Ref: CCN 019202 (DOE Ref 01-OSR-0100)	L Dougherty
3	21 Sep 2001	Removed disclaimer statement from cover page and proprietary markings from all pages of document.	L Dougherty

CONTENTS

Acronyms and Abbreviations viii
1.0 Introduction 1-1
1.1 Purpose 1-2
1.2 Scope 1-4
2.0 Facility Description 2-1
2.1 Site Description 2-1
2.1.1 Site Geography and Demography 2-1
2.1.2 Natural Phenomena 2-3
2.1.3 Nearby Facilities and Transportation 2-7
2.2 Facility Description 2-14
2.2.1 Radioactive Waste Treatment Building 2-15
2.2.2 Immobilized Waste Container Shipping Building 2-22
2.2.3 Wet Chemical Storage Building 2-22
2.2.4 Glass Formers Storage Building 2-23
2.2.5 Other Buildings 2-24
2.3 Process Description 2-25
2.3.1 Waste Receipt 2-26
2.3.2 LAW Feed Evaporator 2-29
2.3.3 Solids Removal by Ultrafiltration 2-29
2.3.4 Cesium and Technetium Removal Using Ion Exchange 2-29
2.3.5 Cesium/Technetium Nitric Acid Recovery 2-29
2.3.6 Cesium Recovery as a Solid 2-30
2.3.7 LAW Melter Feed Evaporator 2-30
2.3.8 LAW Glass Melter 2-30
2.3.9 HLW Glass Melter 2-31
2.3.10 Vitrification Offgas Treatment 2-32
2.3.11 Container Decontamination 2-33
2.3.12 Support Systems 2-33
3.0 Hazard Analysis Methodology 3-1
3.1 Hazard Identification 3-1
3.2 Selection of a Hazard Evaluation Methodology 3-2
3.2.1 Motivation 3-3
3.2.2 Type of Results Needed 3-3
3.2.3 Type of Information Available to Perform the Study 3-6
3.2.4 Characteristics of the Analysis Problem 3-6
3.2.5 Perceived Risk 3-7
3.2.6 Resources Availability and Analysis/Management Preference 3-7
3.3 Hazard Evaluation Methodology 3-7
3.3.1 Preparation 3-8
3.3.2 BNFL PHA Process 3-29
3.4 Ranking of Hazards 3-11

3.5 Candidate Accident Selection 3-15
3.6 Action Items 3-18
4.0 Hazard Identification 4-1
4.1 Hazardous and Radioactive Materials 4-1
4.1.1 Radioactive Materials 4-1
4.1.2 Process Chemicals 4-3
4.2 Chemical Interactions 4-11
4.3 Energy Sources 4-11
4.4 Comparison to Similar Facilities 4-14
4.4.1 Comparison to Hazard Analysis Results from Other Facilities 4-14
4.4.2 Operating Histories of Other Facilities 4-20
5.0 Hazard Evaluation by Process Step 5-1
5.1 Scope of Hazard Evaluation Studies 5-1
5.2 Process Steps 5-3
5.2.1 LAW Feed Receipt 5-3
5.2.2 LAW Feed Receipt Evaporator 5-19
5.2.3 Entrained Solids Removal System 5-36
5.2.4 HLW Feed Receipt and Pretreatment System 5-51
5.2.5 Cesium Removal Using Ion Exchange 5-63
5.2.6 Cesium Recovery as a Solid 5-80
5.2.7 Technetium Removal Using Ion Exchange 5-87
5.2.8 Cesium and Technetium Nitric Acid Recovery System 5-96
5.2.9 Cesium and Technetium Fresh Resin Addition 5-108
5.2.10 LAW Melter Feed Evaporator 5-119
5.2.11 LAW Melter System 5-130
5.2.12 LAW Vitrification Offgas Treatment and Emergency Offgas Systems 5-174
5.2.13 HLW Melters 5-199
5.2.14 HLW Vitrification Offgas Treatment System 5-204
5.2.15 LAW/HLW Secondary Offgas Treatment System 5-218
5.2.16 LAW/HLW Container Decontamination System 5-225
5.2.17 Plant Waste Management System 5-239
5.2.18 Outcell Process Reagents 5-260
5.2.19 Boiler Water Heat Recovery 5-267
5.2.20 Mechanical Handling Systems 5-271
5.2.21 Heating, Ventilation, and Air-Conditioning Systems 5-305
6.0 Hazard Evaluation Results Summary 6-1
6.1 Preliminary Results 6-1
6.1.1 Worker Safety-Related Events Involving Contact with High-Temperature, 6-Corrosive, Toxic, or Radioactive Materials 6-1
6.1.2 Worker Safety-Related Events Involving Nuclear Criticality 6-4
6.1.3 Worker Safety-Related Events Involving Occupational Safety Hazard 6-4
6.1.4 Worker Safety-Related Events Involving Natural Phenomena Hazard 6-4
6.1.5 Worker Safety-Related Events Involving Ultrahigh-Pressure Water 6-5
6.1.6 Collocated Worker-Safety Related Events 6-5

6.1.7 Public Safety-Related Events....6-6
6.2 Controls....6-8
6.2.1 Safeguards for Worker Safety-Related Events Involving Contact with High-Temperature, Corrosive, Toxic, or Radioactive Materials....6-8
6.2.2 Nuclear Criticality Safeguards....6-9
6.2.3 Occupational Safety Protection....6-10
6.2.4 Safeguards for Worker Safety-Related Event Involving Natural Phenomena....6-10
6.2.5 Safeguards for Worker Safety-Related Event Involving Ultrahigh-Pressure Water....6-10
6.2.6 Safeguards for Collocated Worker Safety-Related Events....6-10
6.2.7 Safeguards for Public Safety-Related Events....6-11
7.0 Items Requiring Future Study; Action Items....7-1
8.0 Management Response to Hazard Evaluation Study Issues....8-1
9.0 References....9-1

FIGURES

2-1. Hanford Site Located in Washington State....2-2
2-2. RPP-WTP Buildings....2-16
2-3. Grade Level Diagram of Radioactive Waste Treatment Building....2-17
2-4. Radioactive Waste Treatment Building (+14 m Elevation)....2-18
2-5. Radioactive Waste Treatment Building (+21 m Elevation)....2-19
2-6. Radioactive Waste Treatment Building (-14 m Elevation)....2-20
2-7. Flowchart for the LAW-Only Option....2-27
2-8. Flowchart for the HLW / LAW Option....2-28
3-1. Flowchart for Selecting a Hazard Evaluation Technique for RPP-WTP....3-4
3-2. Example Risk Matrix....3-16

TABLES

2-1. Reactor Siting Exposure Limits 2-13
3-1. Hanford TWRS-P Study Record Sheet 3-11
3-2. Prioritization Attributes of Hazard Evaluation Techniques 3-12
3-3. Frequency Categories 3-14
3-4. Definition of Consequences 3-14
3-5. Example Risk Ranking Categories (from AIChE 1992) 3-17
4-1. Major Radioactive Streams 4-2
4-2. Process Chemicals 4-3
4-3. Hazardous Characteristics of Process Chemicals and Potential By-Products 4-6
4-4. Matrix of Potential Interaction of Facility Process Chemicals 4-12
4-5. Energy Sources by Process Step 4-15
4-6. Comparison of TWRS-P Facility Hazard Evaluation Results to DWPF Hazard Analysis 4-18
4-7. Comparison of TWRS-P Hazard Evaluation Results to the WVDP Hazard Analysis 4-20
4-8. Off-Normal Events at Waste Vitrification Facilities 4-21
5-1. Effluent Disposal 5-98
5-2. Cooling and Chilled Water Discharge 5-98
6-1. Worker Safety-Related Events Involving Contact with High-Temperature, Corrosive, Toxic, or Radioactive Material 6-2
6-2. Worker Safety-Related Events Involving Occupational Safety Hazard 6-4
6-3. Worker Safety-Related Events Involving Natural Phenomena Hazard 6-5
6-4. Worker Safety-Related Events Involving Ultrahigh-Pressure Water 6-5
6-5. Events of Potentially Serious or Major Consequences to the Collocated Worker 6-6
6-6. Events of Potentially Serious or Major Consequences to the Public 6-6

APPENDICES

Appendix A Maintenance Fault Schedules ..... A-i
Appendix B Operability Fault Schedules ..... B-i
Appendix C Environmental Fault Schedules ..... C-i
Appendix D Management Response Letter ..... D-i
Appendix E Part A HAR Significant and Bounding Hazard Evaluations ..... E-i

Acronyms and Abbreviations

AIChE	American Institute of Chemical Engineers
API	America Petroleum Institute
ASCE	American Society of Civil Engineers
bar	bar (gage)
BWR	boiling-water reactor
CCA	Cause-Consequence Analysis
CFR	*Code of Federal Regulations*
CMA	Chemical Manufacturers Association
CRBG	Columbia River Basalt Group
CSB	(Spent Nuclear Fuel) Canister Storage Building
CST	crystalline silico-titanate
CV	column volume
DOE	U.S. Department of Energy
DST	double-shell tank
DWPF	Defense Waste Processing Facility
EARP	Enhanced Actinide Removal Plant
EFD	Engineering Flow Diagram
EPA	U.S. Environmental Protection Agency
ETA	Event Tree Analysis
ETF	Effluent Treatment Facility
FMEA	Failure Modes and Effects Analysis
FMECA	Failure Modes, Effects, and Criticality Analysis
FSAR	Final Safety Analysis Report
FTA	Fault Tree Analysis
HAB	Hanford Advisory Board
HAR	Hazard Analysis Report
HAZOP	hazard and operability (analysis)
HEME	High-efficiency Mist Eliminator
HEMF	High-efficiency Metal Filter
HEPA	high-efficiency particulate air (filter)
HLW	high-level waste
HMS	Hanford Meteorological Station
HVAC	heating, ventilating, and air-conditioning
IHLW	immobilized high-level waste
ILAW	immobilized low-activity waste
ISA	Integrated Safety Analysis
ISAR	Initial Safety Analysis Report
ISFS	independent spent fuel storage installation
LAW	low-activity waste
LCO	limiting condition for operation
MSDS	material safety data sheets
NRC	U.S. Nuclear Regulatory Commission
OSHA	Occupational Safety and Health Administration
PFD	process flow diagram

PHA	Process Hazard Analysis
PSAR	Preliminary Safety Analysis Report
PSM	Process Safety Management
PUREX	Plutonium-Uranium Extraction Facility
RFD	reverse flow device
SCR	selective catalytic reduction
SNF	spent nuclear fuel
SRD	Safety Requirements Document
SSCs	structures, systems, and components
SST	single-shell tank
Supply System	Washington Public Power Supply System
TBD	to be determined
TEDF	Treated Effluent Disposal Facility
TRU	transuranics
TSR	technical safety requirement
TWRS	Tank Waste Remediation System
TWRS-P	Tank Waste Remediation System-Privatization
UBC	Uniform Building Code
WESF	Waste Encapsulation and Storage Facility
WI	What If
WI/CL	What-If/Checklist Analysis
WVDP	West Valley Demonstration Project
WVP	Waste Vitrification Plant

1.0 Introduction

This Hazard Analysis Report (HAR) represents work that was done in Part A of the River Protection Project – Waste Treatment Plant (RPP-WTP) Project, and as such provides an historic perspective for current RPP-WTP design activities. Those aspects of the HAR that remain pertinent to the design are maintained current with the design via the Authorization Basis maintenance procedures, by adding new significant or bounding hazards as they are encountered. The sections of the HAR documenting the significant or bounding hazards are discussed in Appendix E, "Part A HAR Significant and Bounding Hazard Evaluations". Remaining portions of the HAR are not maintained and are not considered part of the Authorization Basis.

A hazard evaluation was conducted to assess the potential risk of BNFL's process for treatment of radioactive waste currently stored in underground tanks at the U.S. Department of Energy's (DOE) Hanford Site. BNFL and DOE have entered into a contract (DOE-RL 1996b) to design, construct, operate, and deactivate a waste treatment facility. BNFL has initiated the design of the facility in response to the DOE's contract requirements (DOE-RL 1996b) for Phase 2 Privatization of the treatment and processing of the waste into glass for long-term storage and disposal.

Part A of the DOE's strategy for tank waste consists of a development period during which the contractor prepares the necessary technical, operational, regulatory, business and financial plans, and licensing/permitting documents for DOE review. Early recognition of the proposed facility's hazards and hazardous situations, as well as development of plans for reducing the risk to workers, the public, and the environment are essential steps in the design process.

Hazard evaluation requires a systematic approach to comprehensively identify the potentially hazardous situations presented by a process or facility. A number of proven methods are described in the literature. BNFL selected a team method that takes advantage of the experience and knowledge of members from a variety of disciplines. The TWRS-P Process was divided into steps. For each step, a study team with an appropriate mix of training and experience was assigned. Each team used a checklist of potential hazard sources to assist in formulating questions about unplanned events that could result in hazardous situations. In hazard analysis guidance literature, this approach is known as the "What If/Checklist" approach.

This Hazard Analysis Report (HAR) provides BNFL's Tank Waste Remediation System-Privatization (TWRS-P) Facility description and process description as known at this stage of design. The HAR (1) identifies materials and energy sources that may lead to a hazardous situation; (2) reports the results of the hazard evaluation studies; and (3) provides the rationale for the choice of hazard evaluation methodology. An important outcome of hazard evaluation in the early design stage is identification of elements requiring either further evaluation or potential design changes to operate the facility safely. A discussion of areas identified for future resolution is provided.

1.1 Purpose

Guidance from DOE encourages use of U.S. Nuclear Regulatory Commission (NRC) regulations and guidance where applicable. The NRC regulations (10 *Code of Federal Regulations* [CFR] 70, proposed revision) require licensees to document the performance and results of the Integrated Safety Analysis (ISA) process to demonstrate that the process was conducted using sound practices and that it comprehensively identifies the structures, systems, components, and personnel relied on for safe operations. The *Integrated Safety Analysis Guidance Document*, draft, NUREG-1513 (NRC 1994) gives the following definition for ISA:

> "Integrated safety analysis means an analysis to identify hazards and their potential for initiating event sequences and their consequences, and the site, structures, systems, equipment, components, and activities of personnel, that are relied on for safety. As used here, integrated means joint consideration of safety and safeguards measures that otherwise might conflict, including integration of fire protection, radiation safety, criticality safety, chemical safety, and physical security measures."

This HAR documents the hazard evaluation study of the TWRS-P Facility and is key to the ISA process. The purpose of the HAR is to demonstrate that the hazard evaluation study meets the 10 CFR 70 ISA requirement of using sound practices to identify hazards, and within the limits of conceptual design, to comprehensively identify the structures, systems, components, and personnel relied on for safe operation.

The best available commercial guidance for performing a hazard analysis is *Guidelines for Hazard Evaluation Procedures* (AIChE 1992). These guidelines were prepared in response to a number of chemical disasters, foremost of which were the Bhopal and Flixborough disasters. Referred to as the American Institute of Chemical Engineers (AIChE) Guidelines (AIChE 1992), this document is cited throughout this HAR to provide the rationale for the systematic approach adopted for the TWRS-P Facility hazard analysis study. These Guidelines have been used beneficially by industry in identifying hazards potential and providing appropriate control. For consistency with the terminology used in the AIChE Guidelines, the term hazard evaluation is used rather than hazard analysis.

To understand the TWRS-P Project approach to hazard evaluation, a brief overview of the genesis of the AIChE Guideline (AIChE 1992), and how it fits into the current legislation and regulation is necessary. Both regulatory agencies and industry have adopted this guideline as the basis for achieving an integrated safety basis. The use of this guideline by BNFL establishes an approach consistent with both current regulatory practice and best industrial practice.

The DOE Standard, *Preparation Guide for U.S. Department of Energy Nonreactor Nuclear Facility Safety Analysis Report*, DOE-STD-3009-94 (DOE 1994b), states that references such as the *Guidelines for Hazard Evaluation Procedures* (AIChE 1992) provide acceptable guidelines for selecting hazard evaluation techniques and generic lists of initiators that need to be incorporated in systematic evaluation.

In draft NUREG-1513 (NRC 1994) the NRC states, "In developing the ISA [Integrated Safety Analysis] guidance for its licensees, NRC has relied on information from various sources, with particular emphasis on information in Guidance for Hazard Evaluation Procedures, developed by the American Institute for Chemical Engineers (1992)." Furthermore, NUREG-1513 indicates that the ISA guidance is intended "to be consistent with the requirements of OSHA and EPA so as to minimize the regulatory burden on NRC licensees". The *Standard Review Plan for the Review of a License Application for a Fuel Cycle Facility*, NUREG-1520 draft (NRC 1995) states that the hazard analysis method is acceptable if its selection is consistent with the guidance provided in NUREG 1513 (NRC 1994).

Under "ISA Methods", Section 2.3 of NUREG 1513, the 12 hazard evaluation techniques described in the AIChE Guidelines (AIChE 1992) are listed. For a hazard evaluation study to be consistent with the definition of ISA, the site, structures, systems, equipment, components, and activity of personnel relied on for safety must be identified and included in the study result, under the category of safeguards. The typical hazard evaluation worksheet, What-If, What-If/Checklist and hazard and operability (HAZOP) analysis tabulates safeguards. Safeguards, as applied in hazard evaluation terminology, are engineered features or administrative controls (e.g., process alarms, interlocks, or procedures) designed to prevent the causes or mitigate the consequences of deviations. Integration of safety and safeguards measures that otherwise might conflict, including integration of fire protection, radiation safety, criticality safety, chemical safety, and physical security measures begins with the hazard evaluation study.

The industry-endorsed efforts of the AIChE, American Petroleum Institute (ARI) (API1990, Recommended Practice 750), and the Chemical Manufacturers Association (CMA) (CMA, Responsible Care Program, Process Safety Code) have been adopted by the Occupational Safety and Health Administration (OSHA), U.S. Environmental Protection Agency (EPA), DOE, NRC, and the states of New Jersey, California, Delaware, and Nevada. A major theme of the resulting legislation and regulation is a systematic approach to the identification of hazards. The OSHA Process Safety Management (PSM) Rule (29 CFR 1910.119) and the EPA Risk Management Program Rule (40 CFR 68) require a systematic process for the identification of deviations, but the coverage focus is different. The EPA is focused on the protection of the public and the environment, and OSHA is focused on protection of the worker.

The EPA's Risk Management Program rule and OSHA Process Safety Management rule contain some of the same key requirements addressed in this HAR. The specific phrasing is the same in several key places. Both rules require an evaluation of consequences of deviations from normal operations and a qualitative evaluation of a range of possible health effects that result from failure of controls, with the emphasis in the OSHA rule on the health effects to employees in the workplace. Both rules require the identification of any previous incident with a potential for catastrophic consequence. The difference in wording is the inclusion of the worker in the workplace under the OSHA rule.

1.2 Scope

This hazard evaluation report provides an assessment of the hazards associated with the planned activities and postulated events throughout the lifetime of the TWRS-P Facility, insofar as these activities are defined at the conceptual phase of design. Although the design is in its conceptual phase, BNFL's experience in operating similar facilities enhances understanding of the potential hazards. The planned process information is more complete than details of facility support systems (e.g., motor control centers, instrument air, and plant air). Startup testing and deactivation concerns, while acknowledged in the hazard evaluation studies, are not covered in detail at this stage of the hazard evaluation.

A hazard evaluation is intended to be a living document. The purpose of the evaluation at the conceptual stage is to identify necessary or desirable changes to the design to improve the safety of the facility. In keeping with the OSHA requirements, hazard evaluation studies will be performed throughout the life of the process as an integral part of the TWRS-P Facility PSM program. The hazard evaluation study will be repeated during detailed design and construction, during any major facility modifications at a minimum of every 5 years throughout the operating lifetime, and continue until the facility is deactivated.

The focus of this hazard evaluation study is on the potential causes and consequences of episodic events (i.e., an accidental release of radioactivity or chemicals) rather than the potential effects of conditions that may exist from normal operations (e.g., pollutant emitted from a registered emission point) or anticipated offnormal events that occur occasionally (e.g., worker injured by rotating equipment) at the TWRS-P Facility. Hazard evaluation studies usually do not consider situations involving industrial health and safety concerns, although any such concerns identified in the course of a hazard evaluation study are not ignored (AIChE 1992). Industrial health and safety concerns are dispositioned by engineering design using industrial standards and operating practices that comply with the OSHA requirements.

This limitation in scope is also found in DOE-STD-3009-94 (DOE 1994b), Section 3.3.1.1, "Hazard Identification", which states, "It is not the intention of the SAR to cover safety as it relates to the common industrial hazards that make up the large portion of basic OSHA regulatory compliance." In contrast, hazard evaluation focuses on the ways that equipment failures, software problems, human errors, and external factors (e.g., weather) can cause fires, explosions, and releases of toxic material or energy (AIChE 1992).

Hazard evaluation studies of the TWRS-P Facility are restricted primarily to the process area; details of the operating area follow the development of the process. Details of the bulk of the plant (e.g., motor control centers, plant air, instrument air) are yet to be developed. The hazard evaluation study of operating areas is undertaken once the process is fully defined.

2.0 Facility Description

Chapter 2.0 provides descriptions of the Hanford Tank Waste Remediation System-Privatization (TWRS-P) Facility site, buildings, and process systems. The TWRS-P Facility receives waste from the Hanford waste storage tanks for processing into glass forms to immobilize the radionuclide inventory for long-term storage. Two processing options are being considered: (1) the low-activity waste (LAW)-only option, and (2) the high-level waste (HLW)/LAW option.

Both options process the LAW specified in the contract as Envelopes A, B, and C waste (DOE-RL 1996b) resulting in the same immobilized low-activity waste (ILAW) product. In addition, the HLW/LAW option processes HLW, specified in the contract as Envelope D wastes. Certain waste streams and products that would be returned to the U.S. Department of Energy (DOE) under the terms of the LAW-only option instead are blended with Envelope D waste feed and incorporated into the immobilized high-level waste (IHLW) product.

The facility and process for the HLW/LAW option are described first. Where there are differences for the LAW-only option, they are discussed. Additional details on the process descriptions are provided in Chapter 5.0, “Hazard Evaluation by Process Step”, as the hazard evaluation for each process step is addressed.

2.1 Site Description

This section describes the physical characteristics of the TWRS-P Facility site and surrounding area as applicable to the hazards evaluation study. A more detailed siting description will be provided in the Initial Safety Analysis Report (ISAR) Section 1.3, “Site Description”. Much of the site characteristics information used in this Hazard Analysis Report (HAR) section is based on *Hanford Site National Environmental Policy Act (NEPA) Characterization* (Cushing 1995), *Geology and Hydrology of the Hanford Site: A Standardized Text for Use in Westinghouse Hanford Company Documents and Reports*, (Delany et al. 1991), and *Canister Storage Building Safety Analysis Report – Phase 3: Safety Analysis Documentation Supporting Canister Storage Building Construction* (Garvin 1997).

2.1.1 Site Geography and Demography

The Hanford Site is a 1,450-km^2 (560-mi^2) area located in the State of Washington (Figure 2-1). The Columbia River enters the Hanford Site boundary at the northwest corner and crosses over to form the eastern boundary as it flows southward. The Yakima River flows from west to east, south of the Hanford Site, and empties into the Columbia River at the conjoined cities of Kennewick, Pasco, and Richland known collectively as the Tri-Cities. The Hanford Site is bordered on the north by the Saddle Mountains and on the west by the Rattlesnake Hills and the Yakima and Umtanum Ridges. Dominant natural features of the Hanford Site include the Columbia River, anticlinal ridges of basalt in and around the site, and sand dunes near the Columbia River. The surrounding basaltic ridges rise to 1,100 m (3610 ft).

The location of the Hanford Site with respect to local counties and regional highways is shown in Figure 2-1. The Hanford Site extends into Benton, Franklin, Grant, and Adams counties.

Figure 2-1. Hanford Site Located in Washington State.

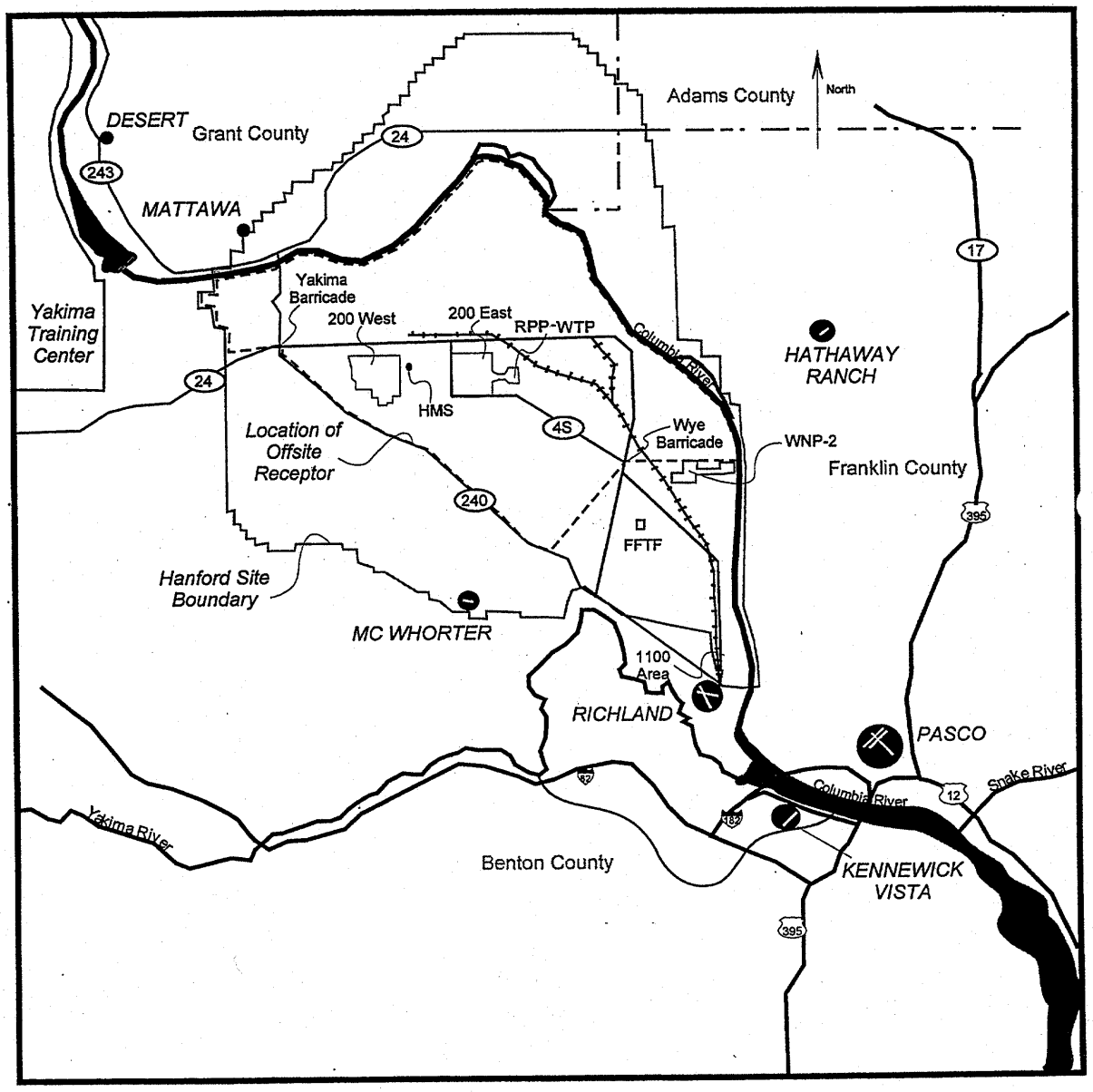

State Highways 24, 240, and 243 pass through the Hanford Site. There are three commercial airports within 50 km (31 mi) of the TWRS-P Facility site. These are the Tri-Cities Airport in Pasco and the Richland Airport and Vista Field in Kennewick.

The population distribution in the area surrounding the Hanford Site is not uniform. Most of the adjacent area to the east, north, and west is farmland or rangeland with scattered farming communities. The major population center of the Tri-Cities is located to the south and southeast of the TWRS P-Facility site. Kennewick, Pasco, and Richland have a combined population of approximately 104,000, based on 1994 estimates. The estimated unincorporated population of Benton County is 33,000 and of Franklin County is 18,000 (DOE-RL 1996a).

Approximately 15,000 persons were employed on the Hanford Site in late 1995. Approximately 500 people were employed at the east end of the 200 East Area near the TWRS-P Facility Site. Some Hanford Site job assignments include shift and weekend work, therefore, the total number of persons on the Hanford Site at any one time varies with the time of day, the staffing requirements for active projects, and daily fluctuations in employee work attendance patterns.

There are no hospitals, nursing homes, or penal institutions within 20 km (12.4 mi) of the TWRS-P Facility site. The three closest schools, Edwin Markham Elementary School, Cypress Gardens School, and Country Christian School, are at least 20 km (12.4 mi) southeast of the 200 East Area. These schools have a total population of less than 500.

Land use in the six-county region surrounding the Hanford Site (i.e., Adams, Franklin, Walla Walla, Benton, Yakima, Grant) is predominantly agricultural. More than 75% of the land area in the six-county region is used for agricultural purposes, compared to less than 40% agricultural land use statewide. The main industries in the Tri-Cities are either agriculture and energy production or are related to these industries. Areas of Benton, Franklin, and Yakima Counties near the Hanford Site are irrigated extensively.

2.1.2 Natural Phenomena

The following sections describe the meteorology, the hydrology, the seismicity, volcanic hazards, and the subsurface stability of the Hanford Site in general and the TWRS-P Facility in particular. The natural phenomena hazards for the Hanford Site are also evaluated.

2.1.2.1 Meteorology

Most of the Hanford Site, including the TWRS-P Facility site, lies in the Pasco Basin. The climate of the Pasco Basin can be classified as midlatitude semiarid or midlatitude desert, depending on the climatological classification scheme used. Summers are warm and dry with abundant sunshine. Large diurnal temperature variation results from intense solar heating during the day and radiation cooling at night. Daytime high temperatures in June, July, and August periodically exceed 38 °C (100 °F). Winters are cool with occasional precipitation. Outbreaks of cold air associated with modified arctic air masses can reach the area and cause temperatures to drop below –18 °C (0 °F). Overcast skies and fog occur periodically during the winter season.

The highest recorded peak wind gust, measured 15 m (50 ft) above ground level at the Hanford Meteorological Station (HMS), was 35.8 m/s (80 mi/hr) in January 1972. The HMS is indicated on Figure 2-1. Peak wind gusts at 23 other meteorological towers located throughout the Hanford Site have been observed to be as high as 40.7 m/s (91 mi/hr). On the basis of peak gusts observed from 1945 through 1980 at 15 m (50 ft) above ground surface, 100-year return period peak gust is estimated to be 38 m/s (85 mi/hr), and the 10-year return period peak gust is estimated to be 32 m/s (72 mi/hr) (Stone et al. 1983).

The design basis straight wind for Design Class I structures, systems, and components (SSC) of the TWRS-P Facility is ~42 m/s (95 mi/hr) 3-second gust at a height of 10 m (33 ft) above ground surface, which has a return period of about 6,500 years (frequency = 1.5×10^{-4}/yr). This value is consistent with the DOE-STD-1020, *Natural Phenomena Hazards Design and Evaluation Criteria for Department of Energy Facilities* (DOE 1994a). A 6.8-kg (15-lb), timber plank missile, with a trajectory height of 9 m (30 ft) at 22 m/s (49 mi/hr) is applied to Design Class I SSCs. The design basis wind and plank missile are included in the Safety Requirements Document (SRD) in Safety Criterion 4.1-3. The design basis straight wind for Design Class II SSCs is 38 m/s (85 mi/hr), 3-second gust at a height of 10 m (33 ft) above ground surface. The basis for this wind speed is American Society of Civil Engineers (ASCE) 7-95, *Minimum Design Loads for Building and Other Structures*, (ASCE 1995) and the Uniform Building Code (UBC) (ICBO 1994). This Safety Criterion is included in the SRD in Safety Criterion 4.1-4.

The tornado wind speed exceeds the straight wind speed with estimated frequency of about 10^{-5}/yr or about every 100,000 years. Because of the low annual probability and relatively low wind speed of a tornado, no tornado design requirements are applied to the TWRS-P Facility. Application of a tornado analysis performed for the Hanford Site Spent Nuclear Fuel Project (Beary 1996) to the TWRS-P Facility shows that the estimated annual frequency of tornado wind or missile impacting the facility is less than 10^{-6}/yr.

The annual average precipitation at the HMS is 17.3 cm (6.8 in) with the wettest year (1995) being 31 cm (12.3 in) and the driest (1976) being 7.6 cm (3.0 in). On average, 54% of normal annual precipitation falls during November through February. The design basis precipitation for Design Class I SSCs is 10 cm (3.9 in) within 6 hours. This value is the 10^{-4} annual probability rainfall, which meets the DOE flooding criterion for Performance Category 3 SSCs (DOE 1994a). The design basis precipitation for Design Class II SSCs is 6.4 cm (2.5 in) within 6 hours. This value is the 5×10^{-4} annual probability rainfall, which meets the DOE flooding criterion for Performance Category 4 SSCs (DOE 1994a).

Total annual snowfall, which includes all frozen precipitation, varies from a low of 0.76 cm (0.3 in.) to 142 cm (56.1 in.). The average annual snowfall is 38 cm (15 in). The record monthly snowfall at the HMS is 55.9 cm (22 in) in December 1996, but the record monthly snowfall on the Hanford Site is 61 cm (24 in) in February 1916. The record seasonal ground snow is 39.6 cm (15.6 in) in December 1985.

Application of ASCE 7-95 recommendation results in a minimum ground snow load for the Hanford Site of 75 kg/m^2 (15.4 lb/ft^2). This is the design basis for the TWRS-P Facility.

The design basis snow load of 75 kg/m^2 (15.4 lb/ft^2) and the design basis of precipitation of 10 cm (3.9 in) within 6 hours for Design Class I SSCs are included in the SRD in Safety Criterion 4.1-3. The design basis snow load of 75 kg/m^2 (15.4 lb/ft^2) and the design basis of precipitation of 6.4 cm (2.52 in) within 6 hours for Design Class II SSCs are included in the SRD in Safety Criterion 4.1-4.

2.1.2.2 Hydrology

The Columbia River and its tributary, the Yakima River, are the primary Hanford Site surface water features. West Lake, about 10 acres and less than 1 m (3.3 ft) deep, is the only natural lake on the Hanford Site. Artificial surface water bodies include ponds and ditches created and used for wastewater disposal.

In the past, there were numerous artificial surface water bodies (e.g., cribs, ponds, ditches) in the 200 East and 200 West Areas. Effluent disposal wastewater infiltrated the ground and, in many instances, affected groundwater flow and chemistry. Today, only B Pond and the Treated Effluent Disposal Facility, located east of 200 East Area, and the state-approved land disposal site, located in the 200 West Area, receive significant volumes of effluent.

The Columbia River originates in the mountains of eastern British Columbia, Canada, and drains an area of approximately 70,800 km^2 (27,300 mi^2) en route to the Pacific Ocean. The average annual flow of the Columbia River is 1.1 x 10^{11} m^3 (3.9 x 10^{12} ft^3) where it enters the Hanford Site and 1.6 x 10^{11} m^3 (5.6 x 10^{12} ft^3) where it exits the site. The river elevation is approximately 120 m (396 ft) near the 100-B and -C Areas and approximately 104 m (341 ft) at the 300 Area.

Flow on the Columbia River is regulated by three upstream dams in Canada and by seven upstream dams in the U.S. The Hanford Reach, approximately 81 km (50 mi) in length, extends from Priest Rapids Dam to just north of the 300 Area. Flow through the Hanford Reach fluctuates significantly and is controlled at Priest Rapids Dam.

The three dams with the largest reservoirs upstream from the Hanford Site are the Mica and Hugh Keenleyside Dams in Canada and the Grand Coulee Dam in the U.S. The controlled flow of the Columbia River caused by these dams results in a lower flood hazard for high-probability floods (e.g., 100-year floods); however, dam-failure scenarios result in high projected flood flows.

The U.S. Army Corps of Engineers evaluated a number of scenarios on the effects of failures of Grand Coulee Dam, assuming flow conditions on the order of 11,000 m^3/s (400,000 ft^3/s). The discharge resulting from a 50% breach at the outfall of Grand Coulee Dam was determined to be 600,000 m^3/s (21 x 10^6 ft^3/s). The 50% scenario represents the largest realistically conceivable flow resulting from either a natural or human-induced breach (ERDA 1976).

This flood scenario results in a flood level of about 143 m (470 ft) above mean sea level at Columbia River closest to the flood route to the 200 Areas Plateau. The TWRS-P Facility site is greater than 46 m (150 ft) above this flood level and would not be directly affected by this flood.

The Yakima River is approximately 20 km (12.4 mi) south of and greater than 60 m (200 ft) in elevation below the TWRS-P Facility Site. Cold Creek and its tributary, Dry Creek, are ephemeral streams in the Yakima River drainage basin. The Cold Creek and Dry Creek probable maximum flood (Skaggs and Walters 1981) reach an elevation of about 195 m (640 ft) on the southwestern portion of the 200 West Area and are separated from the TWRS-P Facility site by a drainage divide exceeding 215 m (705 ft).

The vadose zone (i.e., zone of unsaturated sediments between the water table and the ground surface) is not discussed in detail in the HAR because no hazardous situations have been identified that would result in a significant discharge to the ground.

2.1.2.3 Seismicity

Seismic monitoring at the Hanford Site began in the summer of 1969 when the U.S. Geological Survey installed a small array of seismograph stations around the site. A closely spaced seismic network was installed at the site in 1982 to characterize site microseismicity for a possible HLW repository. The complete network operated until 1988 when the number of stations in the network was reduced. The current network detects and locates earthquakes of magnitude 1.0 at the Hanford Site and magnitude 2.5 throughout most of eastern Washington.

Geomatrix (1996) incorporates seismo-tectonic data and interpretations that postdate the Power et al. (1981) and WCC (1989) assessments. Potential seismic crustal sources determined to be major contributors to the seismic hazard in and around the Hanford Site are as follows:

1) Fault sources related to the Yakima Fold Belt
2) Shallow basalt sources that account for the observed seismicity in the Columbia River Basalt Group (CRBG) and not associated with the anticlines
3) Crystalline basement source region

The site response characteristics of the soils underlying the 200 East and 200 West Areas are similar to those represented in the California empirical strong motion database (Geomatrix 1996). This similarity was determined by comparing the relative response of characteristic Hanford Site soil profiles and dynamic soil properties with those of California deep soil strong-motion recording stations. Time histories representative of the events contributing to the Hanford Site hazard were used for ground motion input.

The design response spectra for SSCs classified as Design Class I are included in SRD Safety Criterion 4.1-3. The response spectra is the 2000-year return period equal-hazard spectra, the horizontal spectrum anchored at 0.24 G. These response spectra meet the requirements for a Performance Category 3 of DOE-STD-STD-1020, *Natural Phenomena Hazards Design and Evaluation Criteria for Department of Energy Facilities* (DOE 1994a). In addition, the response spectra are 20% higher than the UBC peak ground acceleration for the Hanford Site. The SSCs designated as Design Class II are designed to UBC, Zone 2B. The design basis seismic requirements for SSCs classified as Design Class I and II are included in the SRD in Safety Criteria 4.1-3 and 4.1-4, respectively.

2.1.2.4 Volcanic Hazards

Two types of volcanic hazards have affected the Hanford Site in the past 20 million years. The hazards were: (1) continental flood basalt volcanism that produced the CRBG, and (2) the volcanism associated with the Cascade Range. Several volcanoes in the Cascade Range are currently considered to be active, but activity associated with flood basalt volcanism has ceased.

Probabilistic volcanic hazard studies of the Cascade Range have been completed by the U.S. Geological Survey (Hoblitt et al. 1987 and Scott et al. 1995b). Using these studies, the design ash load for Design Class I and II features is 61 kg/m^2 (12.5 lb/ft^2) and 24 kg/m^2 (4.9 lb/ft^2) respectively, based on ashfall probabilities of 3.0×10^{-4} and 1.05×10^{-3} (Salmon 1996). The design basis ashfall accumulation for SSCs classified as Design Class I and II are included in the SRD in Safety Criteria 4.1-3 and 4.1-4, respectively.

2.1.2.5 Subsurface Stability

The TWRS-P Facility site is located on a large flood bar formed by cataclysmic flooding during the Pleistocene Epoch. The foundation material is predominantly the sand-dominated facies of the Hanford formation with varying amounts of gravel.

Field and laboratory studies completed at many of the tank farm sites are summarized in *Bibliography and Summary of Geotechnical Studies at the Hanford Site* (Giller 1992). These studies reveal that there are no areas of potential surface or subsurface subsidence, uplift, or collapse at the TWRS-P Facility site. There are no significant slopes, dams, or embankments at or near the facility site.

Liquefaction is the sudden decrease of shearing resistance of a cohesionless soil, caused by the collapse of the structure by shock or strain, and is associated with a sudden but temporary increase of the pore fluid pressure. Saturated or near-saturated soil (sediments) are required for liquefaction. Therefore, liquefaction of soils beneath the TWRS-P Facility site is not a credible hazard because the water table is greater than 80 m (263 ft) below ground surface.

2.1.2.6 Evaluation of Natural Phenomena Hazards

All facility SSCs classified as Design Class I or II are designed to withstand the design basis natural phenomena without compromising their safety functions. The classification of TWRS-P Facility SSCs is discussed in Integrated Safety Management Plan Section 1.3.10, “Classification of Structures, Systems, and Components”.

2.1.3 Nearby Facilities and Transportation

Facilities in the 200 East Area of the Hanford Site near the TWRS-P Facility site are described. Transportation and nearby industry, including the U.S. Army’s Yakima Training Center are discussed. The human-made hazards are evaluated.

2.1.3.1 200 East Area Facilities

In 1943, the U.S. Army Corps of Engineers selected the Hanford Site for construction of nuclear reactors and chemical processing facilities in support of the war effort. The current mission is environmental management of radioactive and hazardous waste, restoration of Hanford Site land, and conversion of useable facilities for future missions. The DOE nuclear facilities currently occupy approximately 6% of the total available Hanford Site land area. The TWRS-P Facility site is located in the 200 East Area near the center of the Hanford Site on a relatively flat terrace known as the 200 Area Plateau. In the past, the 200 East and 200 West Areas have received waste from other Hanford Site areas in addition to the waste produced by 200 Areas separation processes.

Facilities currently or recently operating in the 200 East and 200 West Areas, and those with the potential to operate in the future, were screened for postulated events that could affect operations at the TWRS-P Facilities. Significant accidental releases of radioactive or hazardous materials from other facilities could lead to the evacuation of TWRS-P Facility operating personnel.

Nearby facilities with significant existing inventories of radioactive materials are the B Plant/ Waste Encapsulation and Storage Facility (WESF), the 200 East Area Tank Farms, and the Plutonium-Uranium Extraction (PUREX) Facility. The facilities on the east side of the 200 East Area, PUREX, and the A and C complex tank farms are closest to the location of the proposed TWRS-P Facility. PUREX no longer operates and is preparing for eventual decontamination and decommissioning. Significantly contaminated areas in the canyons and processing cells provide a source for potential airborne release of radionuclides.

The Tank Waste Remediation System (TWRS) facilities nearest to the TWRS-P Facility are the 8 AP Farm, 7 AN Farm, 6 AW Farm, 2 AY Farm, and 2 AZ Farm double-shell tanks (DSTs) and the 6 A Farm, 4 AX Farm, and 12 C Farm single-shell tanks (SST). These tanks all currently store liquid radioactive waste. Piping, diversion boxes, valve pits, and catch tanks are associated with all the facilities.

The B Plant no longer operates as a processing facility and is currently in deactivation status. The WESF facility is distinct from B Plant but shares with it a wall, and B Plant still provides services to WESF operations. The WESF no longer processes waste, but cesium chloride and strontium fluoride, separated in the past from Hanford Site liquid waste and packaged in double-walled steel capsules, are stored at WESF in a water-filled pool. The worst-case credible accident for the WESF is loss of water from the storage pool because the water provides gamma shielding as well as cooling to the capsules.

Facilities near the TWRS-P Facility that may operate in the future are the Spent Nuclear Fuel (SNF) Canister Storage Building (CSB) and the second facility for vitrification of liquid tank waste. The CSB is currently in construction and will provide dry storage for the spent N-Reactor fuel currently in wet storage in the K-Basins. The CSB will incorporate a facility for final removal of residual and bound water from the fuel by vacuum and high temperature. Hazard and accident analysis for the hot conditioning annex of the CSB is still in progress, as are those analyses for the second proposed vitrification facility.

2.1.3.2 Transportation

The location of the Hanford Site with respect to local counties and regional highways is shown in Figure 2-1. The Hanford onsite road network consists primarily of rural arterial routes. Only 104 of the 461 km (287 mi) of paved roads are accessible to the public. Most onsite employee travel occurs along Route 4, with controlled access at the Yakima and Wye Barricades, as shown in Figure 2-1. Route 4S passes within 1.2 km (0.75 mi) of the TWRS-P Facility site. State Route 240 is the main public route through the Hanford Site. State Routes 24 and 243 also traverse the Hanford Site. State Route 240 passes through the Hanford Site and within 9.3 km (5.8 mi) of the TWRS-P Facility site. An additional access point to the 200 Areas from State Highway 240 (Rattlesnake Barricade) with limited hours of operation, is located near the southeastern corner of the 200 West Area. Public access through the Hanford Site on Highways 24, 240, and 243 is not strictly controlled by DOE under normal circumstances. Large shipments, in particular components from dismantled nuclear submarines, are offloaded at the Port of Benton dock facilities discussed as follows. Overland wheeled trailers are then used to transport the shipments to the Hanford Site.

Onsite rail transport is provided by a short-line railroad owned and operated by DOE. This line connects just south of the Yakima River with the Union Pacific line, which in turn interchanges with the Washington Central and Burlington Northern-Santa Fe railroads at Kennewick. The main line of the Hanford Railroad passes 1.8 km (1.1 mi) to the northeast of the TWRS-P Facility. Traffic on the Hanford Railroad is under the control of DOE.

There is no barge traffic on the Columbia River upstream (north) of the Port of Benton barge slip, which is just north of Richland. The barge slip is located near the upper end of the McNary Dam impoundment, and above this location, the river is too swift and shallow to allow for safe operation of barges. In addition, there are no lock facilities at Priest Rapids Dam, the next upstream dam, and there are no industrial facilities between the Port of Benton barge slip and the dam that would benefit from barge service. Traffic on the Columbia River is not under the control of DOE.

There are three commercial airports within 50 km (31 mi) of the TWRS-P Facility site as shown in Figure 2-1. These are the Tri-Cities and Richland Airports and Vista Field. The closest commercial airport is the Richland Airport, 32 km (20 mi) southeast of the facility. This airport has two 1,220-m (756 mi) runways, one with a 010 °/190 ° orientation and the other with a 070 °/250 ° orientation. Runway capability is about 13,600 kg per point of contact. Visual flight rule landings are standard Federal Aviation Administration non-control-tower patterns. In April 1996, approximately 65 aircraft were based at the airport. The projected number of operations for 1996 is 19,600. Except for two scheduled freight flights, all operations in 1996 were by general aviation aircraft (Hosler 1996).

The Tri-Cities Airport is 45 km (28 mi) to the southeast near Pasco. The Federal Aviation Administration operates the air traffic control tower and the airport radar approval control facility. The airport has two 2,350-m (7,710-ft) crossing runways, Runway 30 with 120 °/300 ° orientation and Runway 21R with 030 °/210 ° orientation. The latter has a 1,350-m (4,429-ft) parallel runway. Runway 30 has a high-frequency omnirange instrument approach and Runway 21R has an instrument landing system and is an instrument-approach runway. In April 1996, about 94 aircraft were based at the airport. Total operations for 1995 were 79,000, with 66% general aviation, 28% commercial aviation (air taxis, air carriers), 4% military aircraft, and 2% other operations (Hosler 1996). Four commercial carriers with a total of about 26 flights per day were serving the airport in April 1996.

The Vista Airport, operated by the Port of Kennewick, is a general aviation airport located 45 km (28 mi) to the southeast. It has a 1,220-m (4,000-ft) runway with a 20 °/200 ° orientation. All operations are under visual flight rules. In April 1996, it was estimated that about 40 aircraft were based at the airport and operations averaged approximately 40 to 50 per day (Hosler 1996).

2.1.3.3 Nearby Industry

There are no oil or gas pipelines in the vicinity of the TWRS-P Facility. The distance to the nearest major natural gas pipeline to the TWRS-P Facility site is about 47 km (29 mi). A 20-in. gas transmission line of the Northwest Pipeline Corporation is located east and essentially parallel to U.S. Highway 395 between Pasco and Ritzville, Washington. A second pipeline system consisting of parallel 36-in. and 42-in. lines, owned by Pacific Gas Transmission Company, passes through Wallula, approximately 53 km (33 mi) from the site (Hosler 1996). These distances eliminate any potential hazardous situation to the TWRS-P Facility from a natural gas fire or explosion.

The nearest petroleum product storage tanks are located 61 km (38 mi) from the site. These are (23-million-gallon) capacity tanks at the Chevron Pipeline Company, and (21-million-gallon) capacity tanks at the Tidewater Barge Lines. Both facilities are located in Pasco, Washington. There are no plans to use a third petroleum storage facility at the Port of Pasco (Hosler 1996).

No other nonnuclear industrial facilities or operations have been identified that may affect TWRS-P Facility operations.

The U.S. Army's Yakima Training Center is a subinstallation under the command of Fort Lewis (Tacoma, Washington). Further information is given in the *Final Environmental Impact Statement – Ft. Lewis Military Installation* (DOA 1979). The southeastern boundary of the Yakima Training Center, as shown in Figure 2-1, is located about 31 km (19 mi) from the TWRS-P Facility. The Yakima Training Center is used for military maneuvers and weapons training and is the only significant military activity in the vicinity of the Hanford Site.

The only operating nuclear reactor on the Hanford Site is WNP-2 operated by the Washington Public Power Supply System (the Supply System). The location of this reactor is shown in Figure 2-1. WNP-2 is a commercial nuclear power plant using a boiling-water reactor (BWR) steam supply system. The design power level was increased to 3,486 MWt in 1995 (Supply System 1995). The reactor was designed by the General Electric Company and is designated as a BWR/5 with a Mark II containment.

2.1.3.4 Evaluation of Nearby Facilities and Transportation

The location and nature of nearby facilities and transportation activities and evaluations of the potential hazardous situations they present to the TWRS-P Facility are discussed in this section.

2.1.3.4.1 Transportation

Accidents that might occur on State Highway 240, such as explosions or toxic chemical releases, are judged to present a negligible risk to the TWRS-P Facility because of the distance between the facility and the highway. At its closest approach, the distance is about 9.3 km (5.8 mi). The U.S. Nuclear Regulatory commission (NRC) Regulatory Guide 1.78, *Assumptions for Evaluating the Habitability of a Nuclear Power Plant Control Room During a Postulated Hazardous Chemical Release* (NRC 1974a), provides useful guidance on evaluating chemicals stored or situated at distances greater than 8 km (5.0 mi) from the facility. It states that they need not be considered for distance greater than 8 km (5.0 mi) because, if a release occurs at such a distance, atmospheric dispersion will dilute and disperse the incoming plume to such a degree that there should be sufficient time for the operators to take appropriate action. In addition, the probability of the plume remaining within a given sector for a long time is low. Because the TWRS-P Facility site is more than 8 km (5.0 mi) from Highway 240, explosions and toxic releases from traffic accidents on Highway 240 are not given further consideration.

Because Route 4 and the Hanford Railroad pass within 1.2 km (0.75 mi) and 1.8 km (1.1 mi), respectively, of the TWRS-P Facility site, additional consideration is given to the transportation of hazardous material on these routes. Regulatory Guide 1.78 (NRC 1974a) also provides useful guidance for the evaluation of potential accidents involving hazardous chemicals that might be shipped past the TWRS-P Facility on Route 4 and the Hanford Site railroad, as well as on the Columbia River. Regulatory Guide 1.78 does not require control room habitability analysis for shipments less frequent than 10 per year for truck traffic, 30 per year for rail traffic, or 50 per year for barge traffic. Neither the truck nor rail guidelines are exceeded for shipments of a quantity that could present a risk to the TWRS-P Facility. Barge shipment on the Columbia River does not occur above the Port of Benton barge facility discussed in Section 2.1.3.2, “Transportation”.

Regulatory Guide 1.91, *Evaluations of Explosions Postulated to Occur on Transportation Routes Near Nuclear Power Plants* (NRC 1978), describes a method for determining distances from critical plant structures beyond which any explosion that might occur on a railway, highway, or navigable waterway is not likely to have an adverse effect on plant operation or prevent safe shutdown. The method is based on an NRC staff judgement that, for structures of concern, an acceptable overpressure limit from such explosions can be conservatively chosen at 7 kPa (1 psi). Although not stated in the regulatory guide, it is assumed that the 7 kPa (1 psi) value was established for structures designed to withstand the severe natural phenomena loadings typical for safety-related structures of nuclear power plants.

For the purposes of this evaluation, the TWRS-P Facility critical plant structures of concern, which are similar to those in a nuclear power plant required for safe plant operation are those contained in the processing facility described as follows. These critical plant structures of concern are reinforced concrete structures with a minimum wall thickness of 1 m (3.3 ft) for which it is reasonable to assume withstand of an overpressure of 7 kPa (1 psi).

Regulatory Guide 1.91 (NRC 1978) defines the safe distance, R, in meters as

$$R \geq 18 \times W^{\Sigma}$$

where

W = kg of TNT

From this correlation, the safe distances for the truck and railcar capacities listed in Regulatory Guide 1.91 are as follows:

510 m (1,670 ft) for a truck (23,000 kg [50,000 lb] capacity)
702 m (2,300 ft) for a single railcar (60,000 kg [132,000 lb] capacity)

Highway 240 is 9.3 km (5.8 mi) from the TWRS-P Facility site. The nearest railroad not controlled by DOE is conservatively assumed to be at the 1100 Area (see Figure 2-1) located approximately 32 km (20 mi) south of the site in north Richland. This is conservative because DOE currently owns and controls the railroad south of this point as discussed in Section 2.1.3.2, “Transportation”. At these distances, explosive shipment on roads and railroads not controlled by DOE does not represent a threat to the TWRS-P Facility.

The main roadway and railroad controlled by DOE that pass nearest to the TWRS-P Facility site are Route 4, which passes 1.2 km (0.75 mi) to the south, and the main line of the Hanford Railroad, which passes 1.8 km (1.1 mi) to the northeast. The main line of the Hanford Railroad and Route 4 are outside of the safe distance listed previously.

DOE-STD-3014-96, *Accident Analysis for Aircraft Crash into Hazardous Facilities* (DOE 1996), gives a method for estimating the annual frequency of aircraft impact for a facility. The Preliminary Safety Analysis Report (PSAR) will provide analysis of aircraft impact frequency for the TWRS-P Facility.

Two factors, the near-airport crash frequency and the non-airport crash frequency, enter into the estimate of annual frequency of aircraft crashes into a facility. According to the DOE standard (DOE 1996), only airports within 35 km (22 mi) miles of the facility can contribute to the near-airport crash frequency. The activities considered in estimating the near-airport crash frequency are takeoffs and landings. Application of the method given in the standard for calculating the annual frequency of an aircraft crash impact within the 1-mi^2 (.6m) area around the TWRS-P Facility shows that none of the airports within a 35-km (22-mi) radius of the TWRS-P Facility contributed to the estimated near-airport crash frequency. Therefore, the near-airport crash frequency does not enter into the estimate.

The non-airport crash frequency is based on the expected number of crashes per mile for aircraft of all types in the vicinity of the Hanford Site. These data are tabulated in the DOE-STD-3014-96 (DOE 1996). Frequencies are estimated using a “four-factor formula” that considers the number of operations, the probability that an aircraft will crash, the probability that an aircraft that crashes will do so into a 1-mi^2 (.6m) area where the facility is located, and the size of the facility. Applying this formula and Hanford Site data to the TWRS-P Facility, the estimated annual frequency of an aircraft crash is found to be 4.5×10^{-6}/year.

An additional factor in assessing the overall frequency that an aircraft crash will lead to releases from the TWRS-P Facility is the probability that the impact will damage Design Class I or II SSCs to the extent that they fail to perform their specified safety functions. Because the general aviation class of aircraft contributed most to the overall crash frequency for the CSB, the analysis examined the potential for penetration of structures by a small aircraft engine.

In the TWRS-P Project processing facility, all potentially hazardous operations are performed in steel-lined cells with reinforced concrete walls a minimum thickness of 1 m (3.3 ft). This robust design provides barriers that can withstand the impact of the most probable aircraft missiles. This will be discussed in greater detail in the PSAR.

2.1.3.4.2 Industry

The only nearby industry that could present a hazardous situation to the TWRS-P Facility is the Washington Public Power Supply Systems (Supply System) WNP-2 operating reactor.

Table 2-1 presents the maximum allowable doses for WNP-2:

Table 2-1. Reactor Siting Exposure Limits

Location	Duration	Whole body dose	Thyroid
Exclusion area boundary	2 hours	25 rem	300 rem
Low-population zone	30 days	25 rem	300 rem

The exclusion area boundary for WNP-2 is at a 1,950-m (6,400-ft) radius from that facility and the low-population zone distance is at a 4,827-m (15,800-ft) radius. The TWRS-P Facility is located approximately 17.6 km (11 mi) from WNP-2. Using the atmospheric diffusion guidance provided in NRC Regulatory Guide 1.3, *Assumptions Used for Evaluating the Potential Radiological Consequences of a Loss of Coolant Accident for Boiling Water Reactors* (NRC 1974b) to estimate the dose reduction as a function of distance, it was determined that the 2-hour and 30-day doses at the TWRS-P Facility would be reduced by a factor of 20. The factor of 20 reduction for distance would result in a whole body dose of 1.25 rem and a thyroid dose of 15 rem.

The expected dose received at the TWRS-P Facility site, should a loss of coolant accident occur at WNP-2, would be significantly less than the atmosheric diffusion guidance estimate. Regulatory Guide 1.3 (NRC 1974b) requires an assumption that 25% of the radioactive iodine and all of the noble gases are released to the containment. In fact, the emergency core cooling system would prevent most of these releases, as little fuel damage would occur as a result of the loss of coolant accident.

The Supply System plans to add an independent spent fuel storage installation (ISFSI) on their leased property. The ISFSI would be licensed following the requirements in 10 CFR 72, "Licensing Requirements for the Independent Storage of Spent Nuclear Fuel and High-Level Radioactive Waste". According to 10 CFR 72.106, "Controlled area of an ISFSI or MRS", an individual located at the ISFSI's controlled area boundary shall not receive a dose greater than 5 rem. At the TWRS-P Facility site, this would result in a dose not exceeding 0.25 rem.

The natural gas pipelines and oil storage facilities discussed in Section 2.1.3.3, "Nearby Industry", are too distant to represent a hazard to the TWRS-P Facility.

No other nonnuclear industrial facilities or operations that may affect TWRS-P Facility operations have been identified.

2.1.3.4.3 Military Facilities

The only weapon currently in use at the U.S. Army's Yakima Training Center known to present a hazard to the Hanford Site is the Multiple Launch Rocket System. With a range of approximately 26 km (16 mi), the Multiple Launch Rocket System cannot impact the TWRS-P Facility site. In addition, the Multiple Launch Rocket System only fires from the perimeter of the Yakima Training Center into a centrally located impact zone. Given this information, additional safety features, and the administrative controls in place at the Yakima Training Center, a weapons accident having an impact on the Hanford Site is very improbable. A more probable hazard to Hanford Site facilities is a scenario in which a fire starts within the Yakima Training Center boundary and spreads to the Hanford Site. Exploding artillery shells, sparks from tracked vehicles or other machines, and careless cigarette smoking by troops might start brush fires that, under adverse meteorological conditions, could spread rapidly beyond the Yakima Training Center boundaries. Annually between April 15 and September 15, measures are put in place to reduce the risk of fire on the Yakima Training Center (Burlington 1992)

The TWRS-P Facility incorporates a 9.1-m (30-ft) zone inside the fence that is kept clean of combustibles, dry plant materials, and windborne debris that would allow a range fire to approach. Maintaining firebreaks is the responsibility of the Hanford Fire Department.

2.2 Facility Description

The TWRS-P Facility, for treating both the LAW-only option and the HLW/LAW option-comprises a radioactive waste treatment building, an immobilized waste container shipping building, a melter assembly building, an empty container storage building, a wet chemical storage building, a glass formers storage building, a services building, and an administration building. The waste treatment building, immobilized waste container shipping building, wet chemical storage building, and glass formers storage building house the primary process cells and storage of materials that are the subject of the hazard evaluation. Figure 2-2 shows the proposed locations of the buildings.

2.2.1 Radioactive Waste Treatment Building

The waste treatment building for the LAW-only option contains processes for conditioning (i.e., pretreatment) and immobilizing in glass the LAW feeds. For the HLW/LAW option, the processes for conditioning and immobilizing HLW is also included. Additionally, for the LAW-only option, the waste treatment building includes an area for producing an intermediate waste form from the cesium separated from the LAW feeds. Figures 2-3 through 2-6 show the details of the radioactive waste treatment building.

The ILAW, IHLW, and the cesium intermediate waste form are sealed in containers and placed in an interim storage area within the waste treatment building. Secondary waste streams (i.e., radioactive solid waste; nonradioactive, nondangerous liquid effluents; and radioactive, dangerous liquid effluents) are collected, sampled, analyzed, and returned to the DOE for treatment and disposal.

Gaseous effluents generated from treating the waste feeds are treated, sampled, analyzed, and discharged to the atmosphere through a 75-m (246-ft)-tall stack.

The overall length of the waste treatment building is approximately 250 m (820 ft). The dimensions of the immobilization area are approximately 200 m long by 35 m wide by 30 m high (660 ft long by 115 ft wide by 100 ft high) abovegrade for the LAW-only option. For the HLW/LAW option, the width is doubled to 70 m (230 ft). The immobilization area extends belowgrade approximately 7 m (23 ft). The dimensions of the pretreatment area are approximately 50 m long by 105 m wide by 30 m high (165 ft long by 345 ft wide by 100 ft high) abovegrade. The pretreatment area extends belowgrade approximately 14 m (46 ft) to accommodate equipment size and hydraulic head differences required by the process.

The immobilization area includes remotely-operated vitrification systems contained in stainless- steel-lined concrete cells. The vitrification systems comprise feed makeup vessels, joule-heated melters, offgas treatment equipment, and waste-container handling, welding, and decontamination equipment. Glass-forming chemicals are stored in a room situated above the vitrification process cells, at 21 m (69 ft) abovegrade. The glass-forming chemicals are transferred through piping that penetrates the vitrification cells into the feed makeup vessels where they are blended with the waste stream. After vitrifying the waste, the waste containers are sealed, decontaminated, and transferred to an interim storage area within the waste treatment building.

Figure 2-2. RPP-WTP Buildings

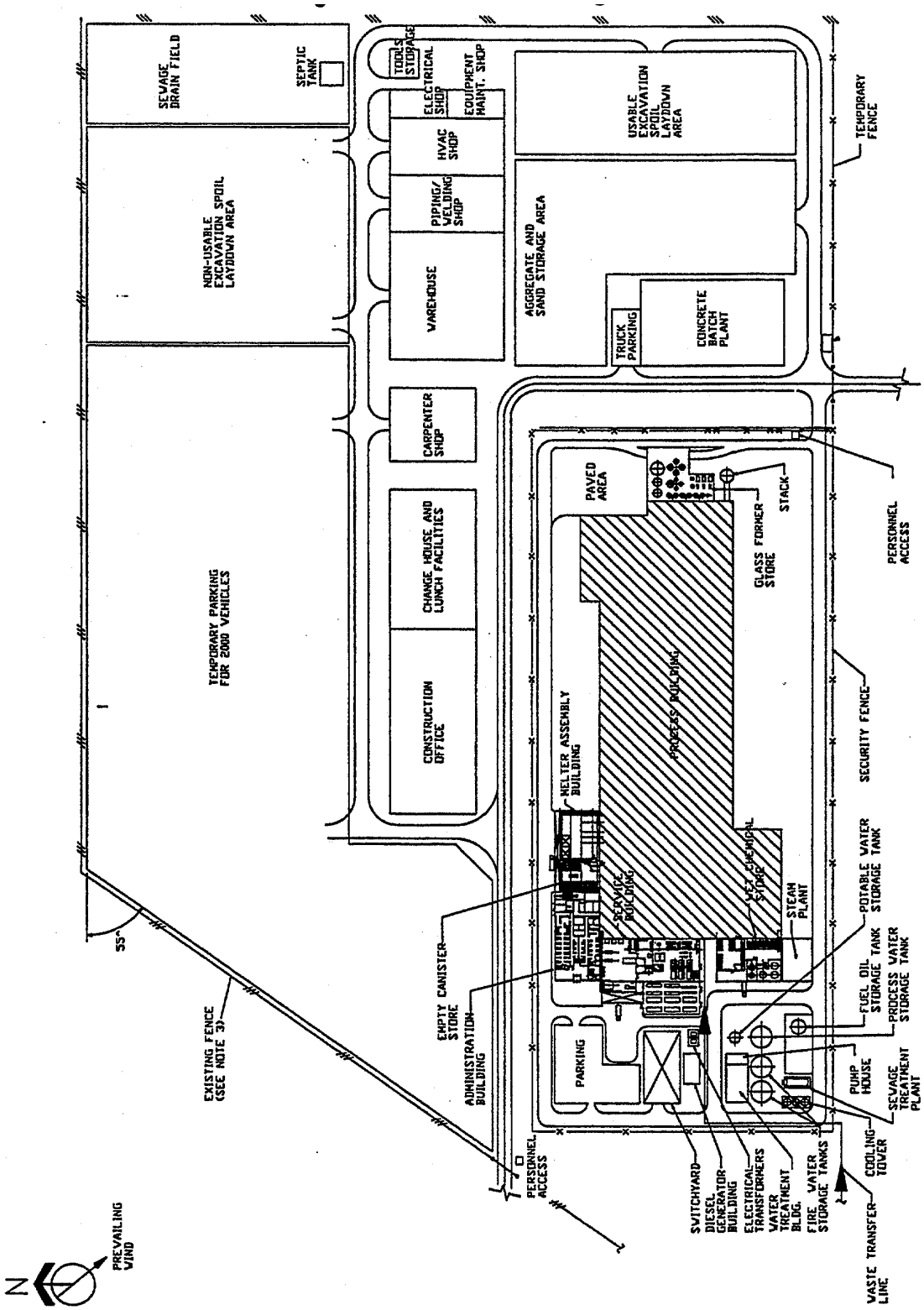

Figure 2-3. Grade Level Diagram of Radioactive Waste Treatment Building

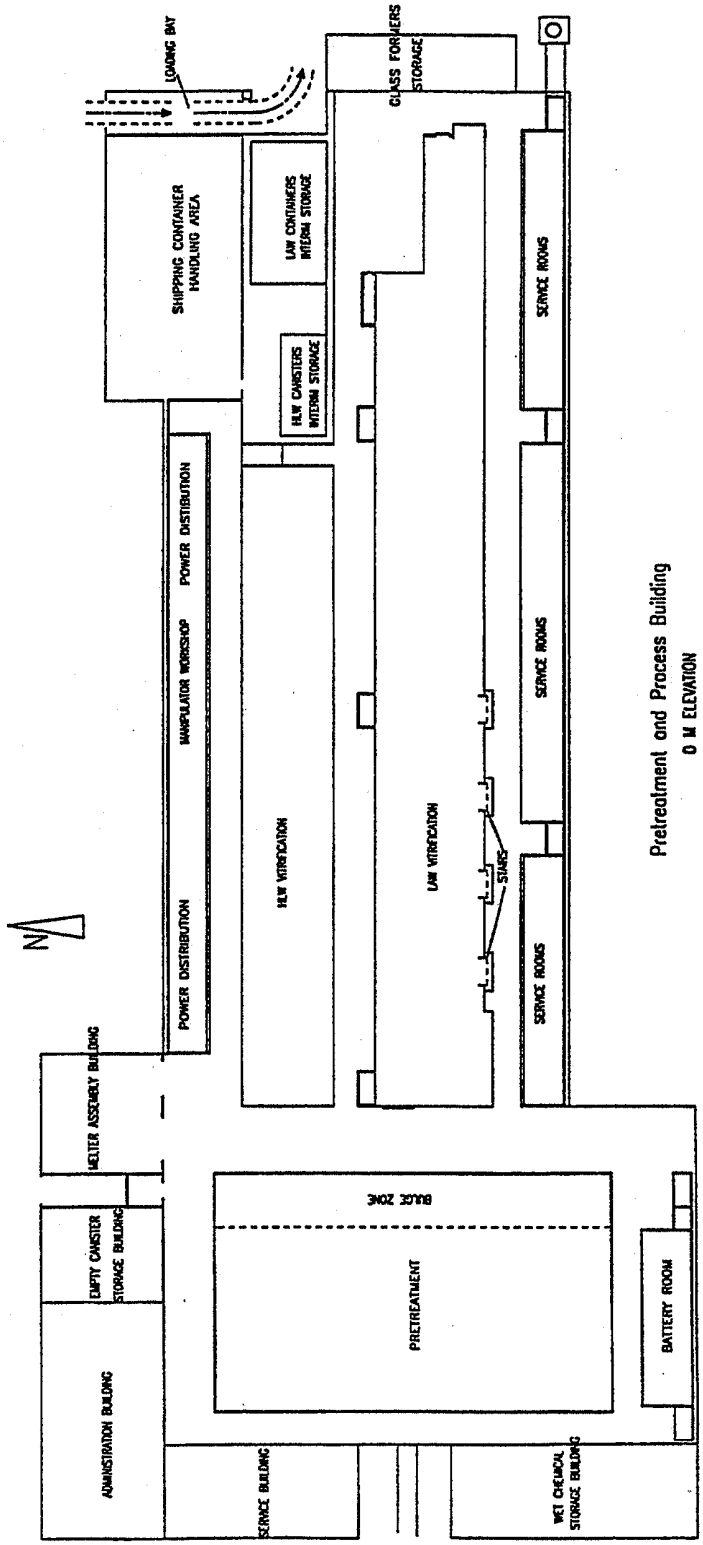

Figure 2-4. Radioactive Waste Treatment Building (+14 m Elevation)

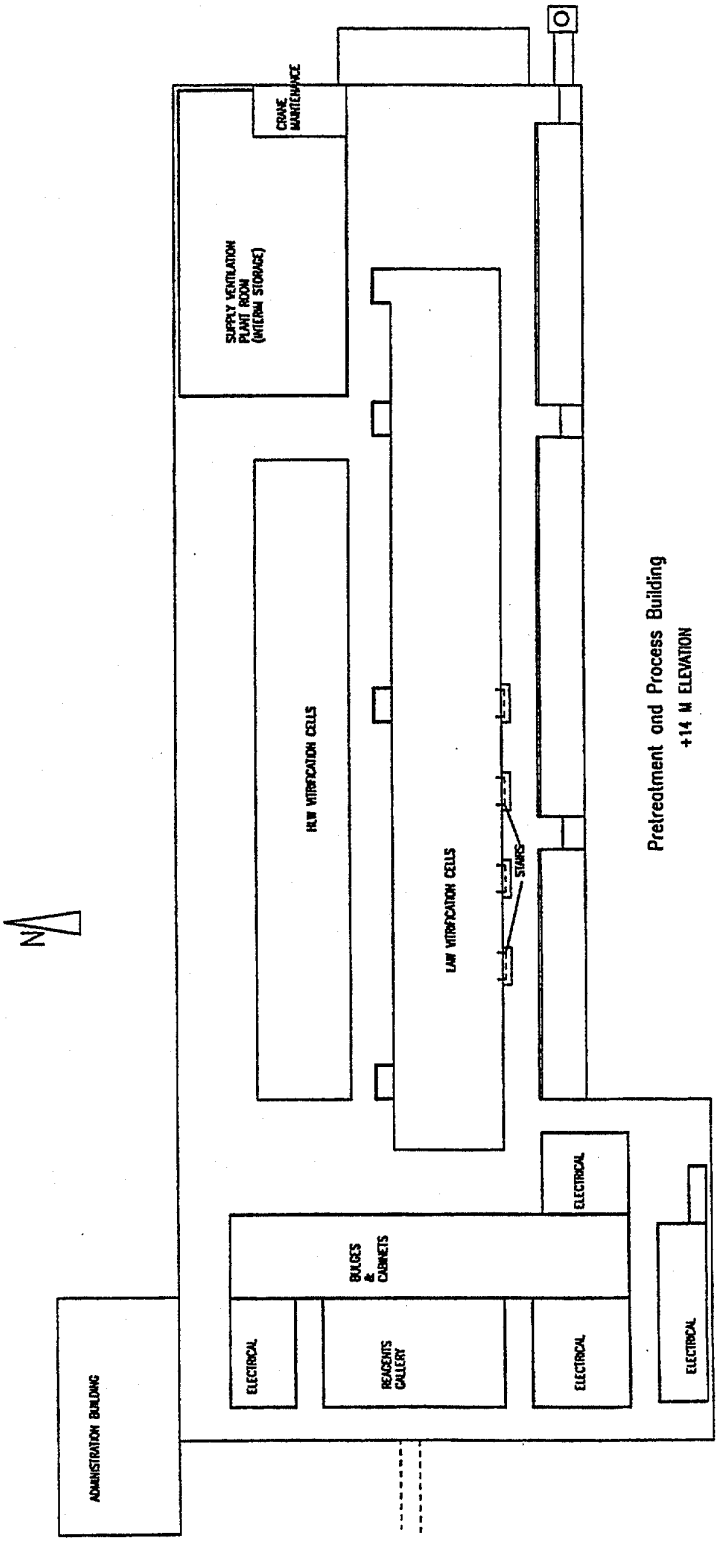

Figure 2-5. Radioactive Waste Treatment Building (+21 m Elevation)

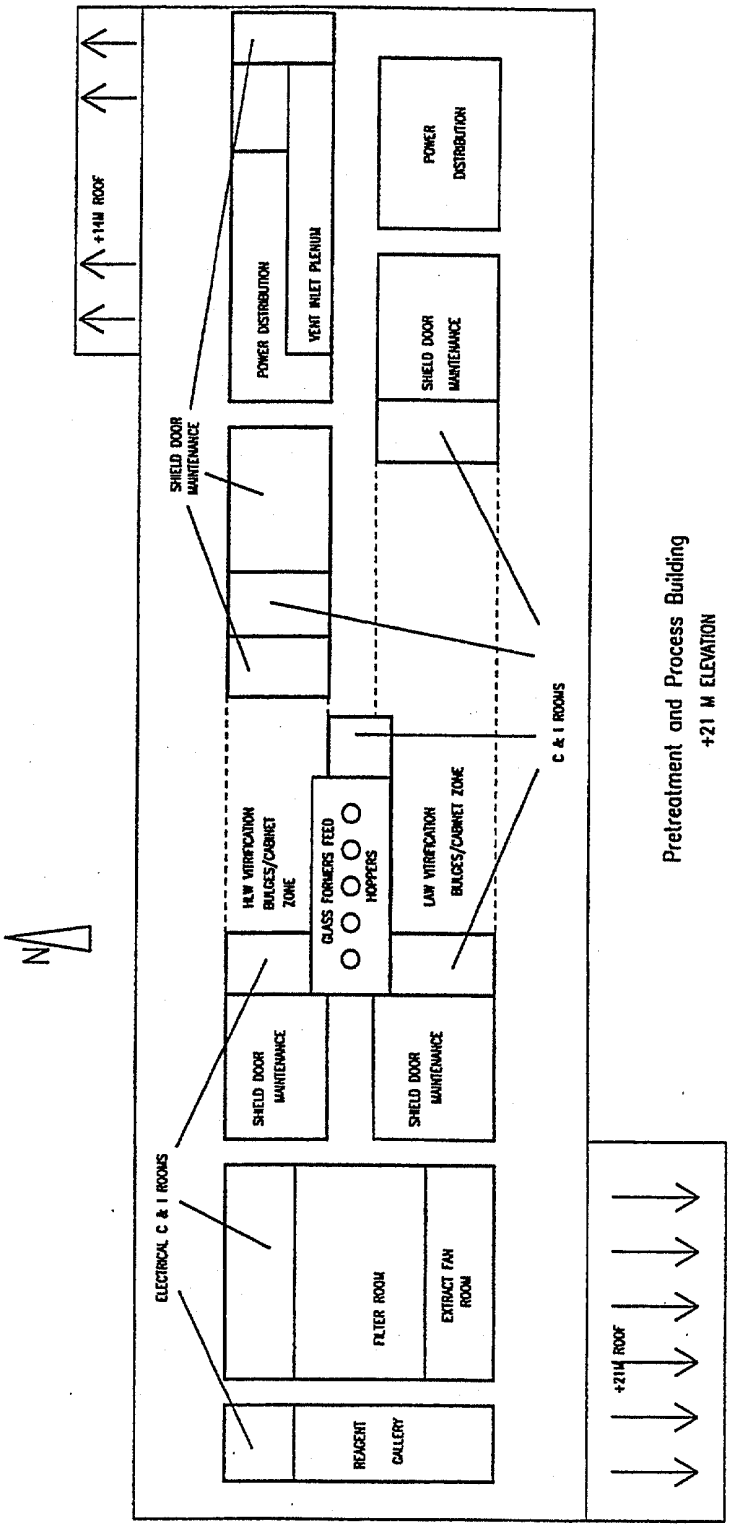

Figure 2-6. Radioactive Waste Treatment Building (-14 m Elevation)

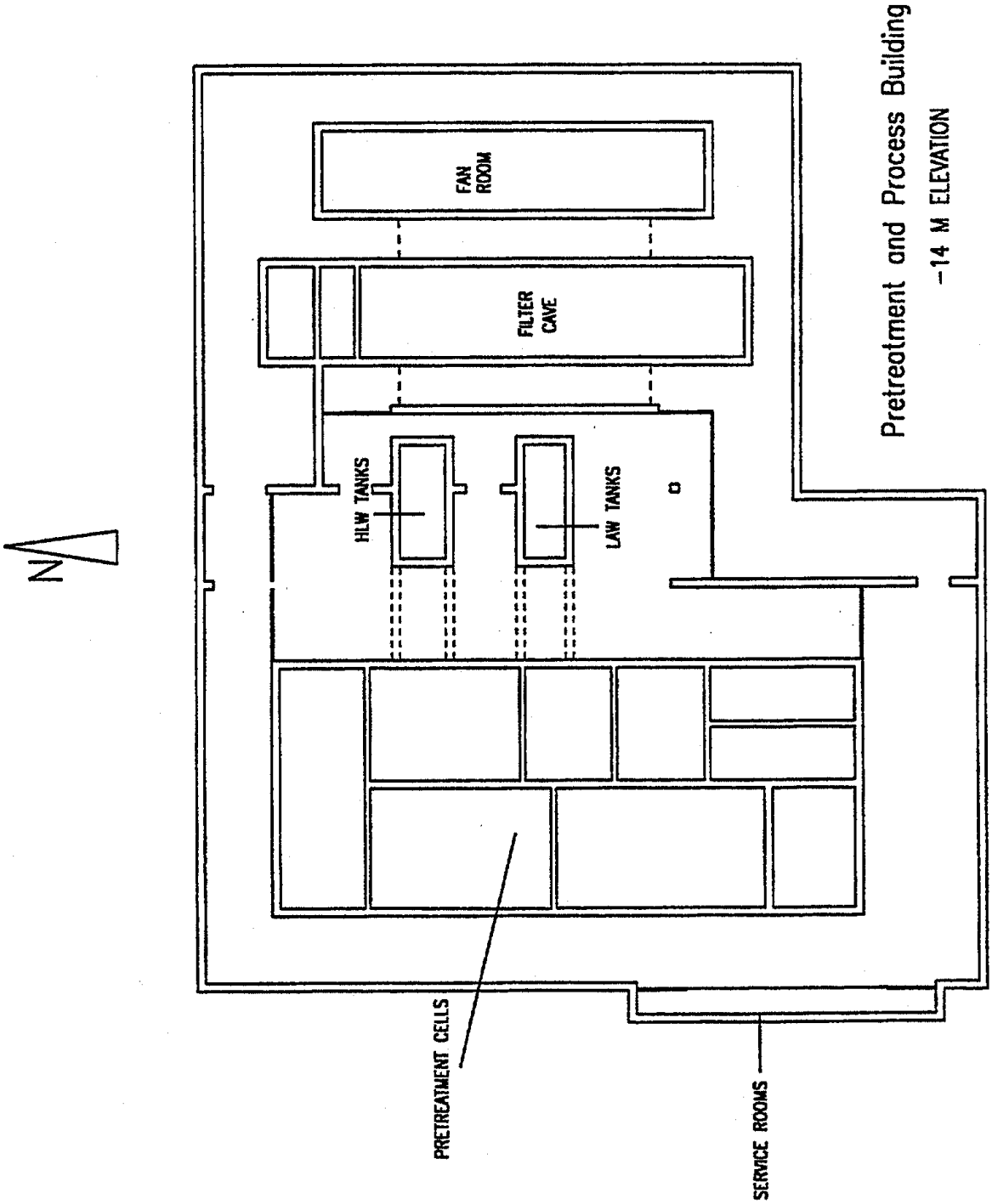

The waste container interim storage area is located adjacent to the immobilization area. Waste containers are transferred through one of two underground tunnels (7 m [23 ft] elevation) from the immobilization area into the interim storage area using shielded flasks. Waste containers are stored in the interim storage area until the DOE accepts the immobilized waste. On acceptance of the waste, immobilized waste containers are transferred through an underground tunnel into the container shipping building using a shielded flask.

For the LAW-only option, there is a cesium intermediate waste processing area that includes remotely operated equipment contained in stainless-steel-lined concrete cells. The remotely operated equipment consists of vessels, ion exchange columns, container welding, and decontamination equipment.

For both options, the pretreatment area includes six stainless-steel-lined concrete cells that contain remotely operated equipment that performs the following:

1) Separates radionuclides from the LAW feed
2) Concentrates the separated radionuclides
3) Concentrates the pretreated LAW solution
4) Stages the pretreated LAW solutions for immobilization
5) Collects and monitors liquid effluents

For the LAW-only option, the area also includes provisions for the following:

1) Interim storage and transfer of the separated entrained solids, strontium, and transuranics (TRU) to the DOE via an underground pipeline
2) Interim storage of the technetium separated from the LAW feeds
3) Interim storage of the cesium separated from the LAW feeds

For the HLW/LAW option, storage of separated solids and radionuclides is unnecessary because they are incorporated in the immobilized HLW product. Therefore, the HLW/LAW option also includes cells and equipment that

1) Concentrate the HLW feed solution
2) Blend with the HLW feed the radio nuclides separated from the LAW feeds
3) Stage the blended HLW feeds for immobilization

These pretreatment process cells begin at the 14-m (146-ft) elevation and extend to 7-m (23-ft) abovegrade. Situated adjacent to the pretreatment process cells are shielded areas called bulges for accessing pumps and valves. The bulges are at the 7-m (23-ft), 0-m (0-ft), and 7-m (23-ft) elevations in the building.

At the 7-m (23-ft) elevation, a cooling water room that services the pretreatment area is situated. In the cooling water room, the primary cooling water closed-loop system is monitored and heat is exchanged with the secondary cooling water loop.

An analytical laboratory is located adjacent to the west side of the cooling water room. The laboratory is used to analyze samples of process solutions, products, and secondary waste. The analytical laboratory contains remotely operated cells and equipment for receipt and analysis of radioactive process and product samples. Additionally, fume hoods, gloveboxes, and analytical equipment are provided for handling and analysis of samples that exhibit low radiation levels.

A chemical reagents gallery is situated in the pretreatment area at the 14-m (46-ft) elevation. Tanks in the chemical reagents gallery receive chemical solutions from the wet chemical storage building and supply chemicals to vessels in the pretreatment process cells.

The waste treatment building contains various rooms for electrical distribution systems, backup battery power, heating, ventilating, and air-conditioning (HVAC) systems, instrumentation and controls, cooling water distribution, and miscellaneous workshops.

2.2.2 Immobilized Waste Container Shipping Building

Within the immobilized waste container shipping building, the shipping container provided by DOE is removed from the transport vehicle, the immobilized LAW containers or cesium intermediate waste packages are loaded into the shipping container, and the shipping container is placed onto the transport vehicle. A drive-through bay is located on the east side of the building, providing the DOE transport vehicle access to the building interior via a roll-up door. An airlock is provided on the northeast side of the building for personnel egress to the building exterior. A change room is provided for personnel to put on or remove special worker clothing.

The building is located on the northeast side of the radioactive waste treatment building, adjacent to the interim storage area for the immobilized waste containers. The exterior dimensions of the building are 25 m wide by 55.7 m long by 14 m high (82 ft wide by 183 ft long by 46 ft high) abovegrade.

The building is connected to the interim storage area for immobilized waste containers (inside the waste treatment building) by two underground transfer tunnels located at 7 m (23 ft) elevation. These tunnels are used to transfer the sealed, immobilized LAW and HLW containers and the cesium intermediate waste packages (in the case of the LAW-only option) from the interim storage area to the container shipping area. Sealed waste containers are transferred into the shipping area using shielded flasks to reduce personnel radiation exposure. Additional access into the waste treatment building is provided via an airlock located in the southwest corner of the container shipping building.

2.2.3 Wet Chemical Storage Building

The wet chemical storage building is located at grade on the southwest side of the radioactive waste treatment building. The exterior dimensions of the building are approximately 24 m wide by 36 m long by 9 m high (79 ft wide by 118 ft long by 30 ft high). The roof of the building is flat with a slight slope to promote drainage and overhangs the west side of the building by 6 m (20 ft). A concrete loading pad is provided on the exterior west side of the building beneath the overhang of the roof. Delivery trucks can park parallel or perpendicular to the concrete loading pad.

The building is subdivided into an ion exchange resin storage area and a bulk chemical reagents storage area. The exterior dimensions of the ion exchange resin storage area are approximately 24 m wide by 14 m long by 9 m high (79 ft wide by 46 ft long by 30 ft high). The ion exchange resins storage area has exterior building walls and environment controls to prevent damage to these materials. Exterior access to the ion exchange resins storage area is through a 4 m (13ft) high roll-up door located on the west side of the building. A stairway is provided for access to the building roof for service and maintenance of the building HVAC equipment.

Ion exchange resins are brought into the waste treatment building through a double-door airlock on the east side of the resin storage area. The airlock remains closed while the exterior roll-up door is open. After receiving ion exchange resins, the roll-up door is closed. Personnel can enter the ion exchange resin storage area only via the airlock through the waste treatment building.

The exterior dimensions of the bulk chemical reagents storage area are approximately 24 m wide by 22 m long by 9 m high (79 ft wide by 72 ft long by 30 ft high). This area does not have exterior building walls but is covered with a roof to protect the chemicals from the weather. The bulk chemicals are stored in tanks within spill retention basins. Dry chemicals (e.g., ferric nitrate, strontium nitrate, sodium nitrite) are stored separately in this area as well.

The bulk chemical reagents stored in the wet chemical storage building are as follows:

- 19M sodium hydroxide solution
- 1M strontium nitrate solution
- 5M sodium hydroxide solution
- 1M ferric nitrate solution
- 0.5M sodium hydroxide solution
- 0.5M sodium nitrite solution
- 12.2M nitric acid solution
- Liquefied ammonia
- 5M nitric acid solution

Piping from the discharge pumps from the chemical storage tanks is routed through the exterior wall to the reagents gallery at the 14-m (46-ft) elevation within the waste treatment building.

2.2.4 Glass Formers Storage Building

The Glass Formers Storage Building receives, stores, weighs and blends the bulk glass chemicals. The building sits at the East end of the Main Process Building. The building consists of a fabricated steel structure with insulate siding and roof. The building has dimensions of 115 feet (35 meters) in length, 33 feet (10 meters) wide, and 70 feet (21 meters) tall. The building provides space for two surge bins and eleven storage silos and the weighing, blending, and transfer equipment.

Trucks deliver the bulk material for glass forming make-up chemicals. On arrival and before the trucks unload, scales weigh the trucks contents. The pneumatic transfer system unloads the truck into one of two surge storage bins. From the surge bin, the pneumatic systems transfers the chemical to one of the eleven bulk storage silos that provides 30-day storage for the chemical. From the storage silos, the make-up chemicals are blend and transferred to Main Process Building.

The Glass Former Building stores:

- silica sand
- zinc oxide
- copper oxide
- ferric oxide
- zircon sand
- lithium carbonate
- boric acid
- alumina
- magnesium silicate
- calcium silicate

2.2.5 Other Buildings

The TWRS-P Facility includes the following additional buildings. These buildings were not included in the hazard evaluation, as they do not contain significant quantities of hazardous materials. The building locations are shown on Figure 2-2.

Melter assembly building. This building is located at grade on the northwest side of the radioactive waste treatment building and adjacent to the empty canister storage building. The building is used for the storage and assembly of melters, melter components, and miscellaneous equipment. The melter assembly building also serves as the main equipment access to the waste treatment building.

Empty Container Storage Building. This building is located at grade on the northwest side of the radioactive waste treatment building and adjacent to the melter assembly building. Empty waste containers are unloaded, inspected, and stored in the building. Sufficient space is provided inside the building to store 40 empty cesium intermediate waste packages (for the LAW-only option) or 20 empty HLW canisters (for the HLW/LAW-option) and 120 empty LAW containers. An office and clothing area is located in the southeast corner of the building to monitor access and provide special gloves for handling the containers to prevent transfer of oils to container surfaces.

Services building. This building is located at grade on the west side of the radioactive waste treatment building. The building provides services to the waste treatment building. The building is divided into two areas: a non-radioactive maintenance shop and services area. The maintenance shop contains welding equipment, work tables, tools, miscellaneous equipment, offices, restrooms, and an airlock to the waste treatment building. An instruments and a controls maintenance area is included in the maintenance shop. The services area includes a mechanical equipment room where the breathing air equipment for the waste treatment building is located. Instrument air compressors, air receiver tanks, coolers, water chiller units, and heat exchangers are located in the services area.

Administration building. This building is located at grade on the northwest side of the waste treatment building. It contains offices and facilities for the operating staff.

2.3 Process Description

For the LAW-only option, the waste feeds to the facility consist of liquid feeds with low solids content. Specification 7 of the contract (DOE-RL 1996b) states that the insoluble solids fraction of the LAW does not exceed 5 volume percent of the waste transferred. The ILAW has radionuclide concentrations less than Class C limits as defined in 10 CFR 61.55. The average concentrations of cesium-137, strontium-90, and technetium-99 in the ILAW are further limited by Specification 2 of the contract (DOE-RL 1996b) as follows: cesium-137 <3 Ci/m^3, strontium-90 <20 Ci/m^3, and technetium-99 <0.3 Ci/m^3. Concentrations of these radionuclides in the LAW waste envelopes are too high to meet these limits. Therefore, the pretreatment of the LAW includes process steps for removing these three radionuclides, as well as entrained solids, from the feed before vitrification and incorporating them into waste forms for storage and eventual return to DOE as described in Specifications 4, 5, and 6 of the contract (DOE-RL 1996b). The surface dose rate of the ILAW does not exceed 1,000 mrem/h.

For the HLW/LAW option, two processes proceed in parallel. One process treats the same LAW streams as the LAW-only option, yielding the same ILAW product. The other process is designed to receive and treat wastes from the aging waste double-shell storage tanks and the sludge retrieved by sluice from SST C-106. The expected composition of the HLW feed (Waste Envelope D) is given in Specification 8 of the contract (DOE-RL 1996b). The bulk of the HLW feed components is in the form of insoluble suspended solids in an aqueous slurry. The IHLW product has higher activity than the product from the LAW.

The major difference between the two options is that the HLW melter receives solids-bearing waste, while the LAW melter receives liquids only. Therefore, in the combined HLW/LAW option, the solids recovered during pretreatment of the LAW feeds are routed for mixing with the Envelope D waste for processing by the HLW melter. The condensate streams generated by ultrafiltration of the HLW are routed to the LAW melter. In addition, the cesium-137, strontium-90, transuranic elements and technetium-99 separated from the LAW are routed for mixing with the Envelope D waste for processing into the IHLW product.

Figures 2-7 and 2-8 provide simple flow diagrams for the LAW-only and the HLW/LAW options, respectively.

2.3.1 Waste Receipt

The processing of the LAW for both options starts with waste receipt from DOE into an existing DST. After the feed is sampled to establish the waste feed content, a batch is transferred to the LAW Feed Receipt Tank. For Envelopes A and B waste, the batch size is 125.8 m^3 (33.3 kgal). For Envelope C, the batch size is 81.2 m^3 (21.5 kgal). The HLW Envelope D feed is sent directly to the ultrafiltration loop for separation of solids and liquid.

Figure 2-7. Flowchart for the LAW-Only Option

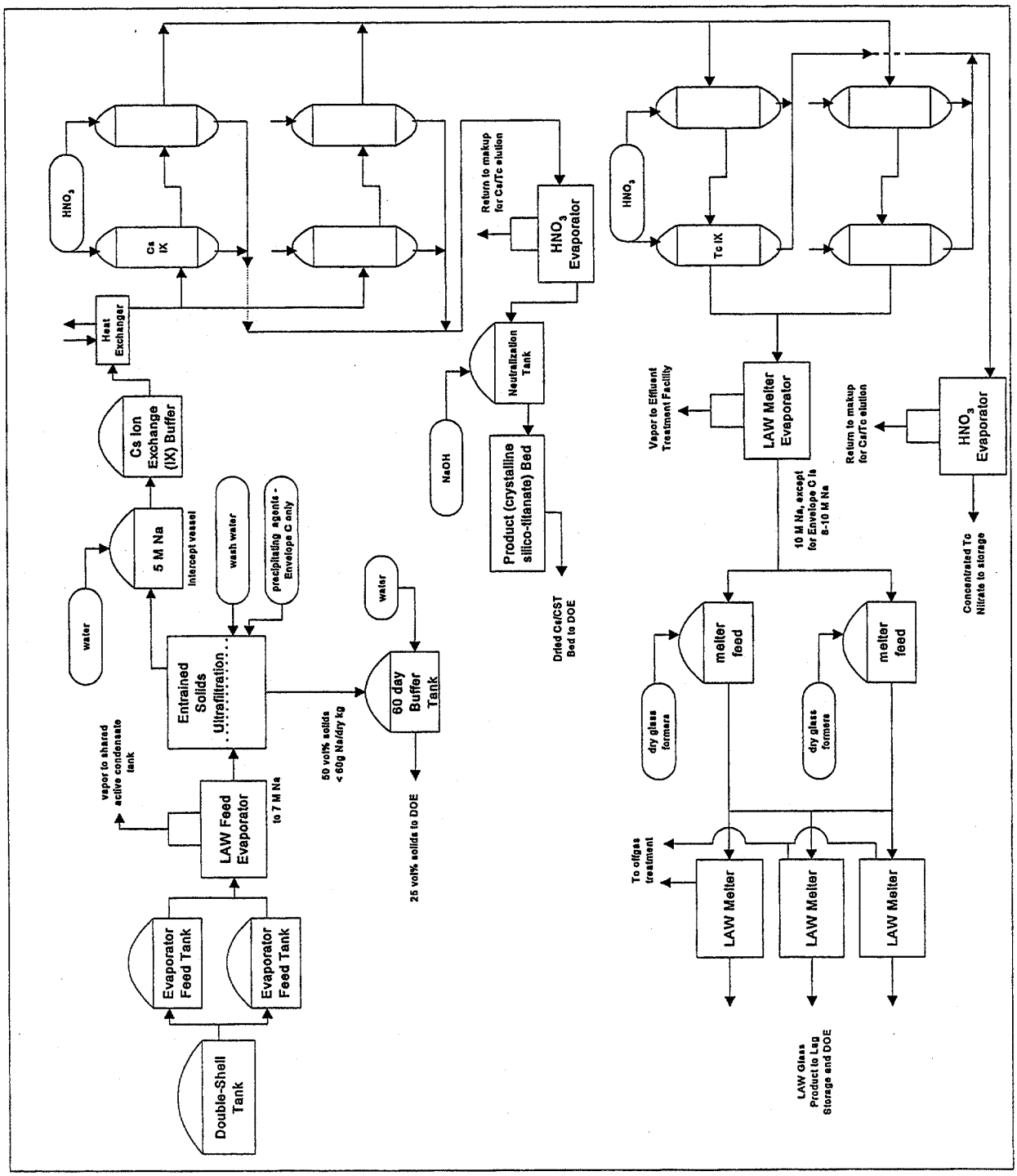

Figure 2-8. Flowchart for the HLW / LAW Option

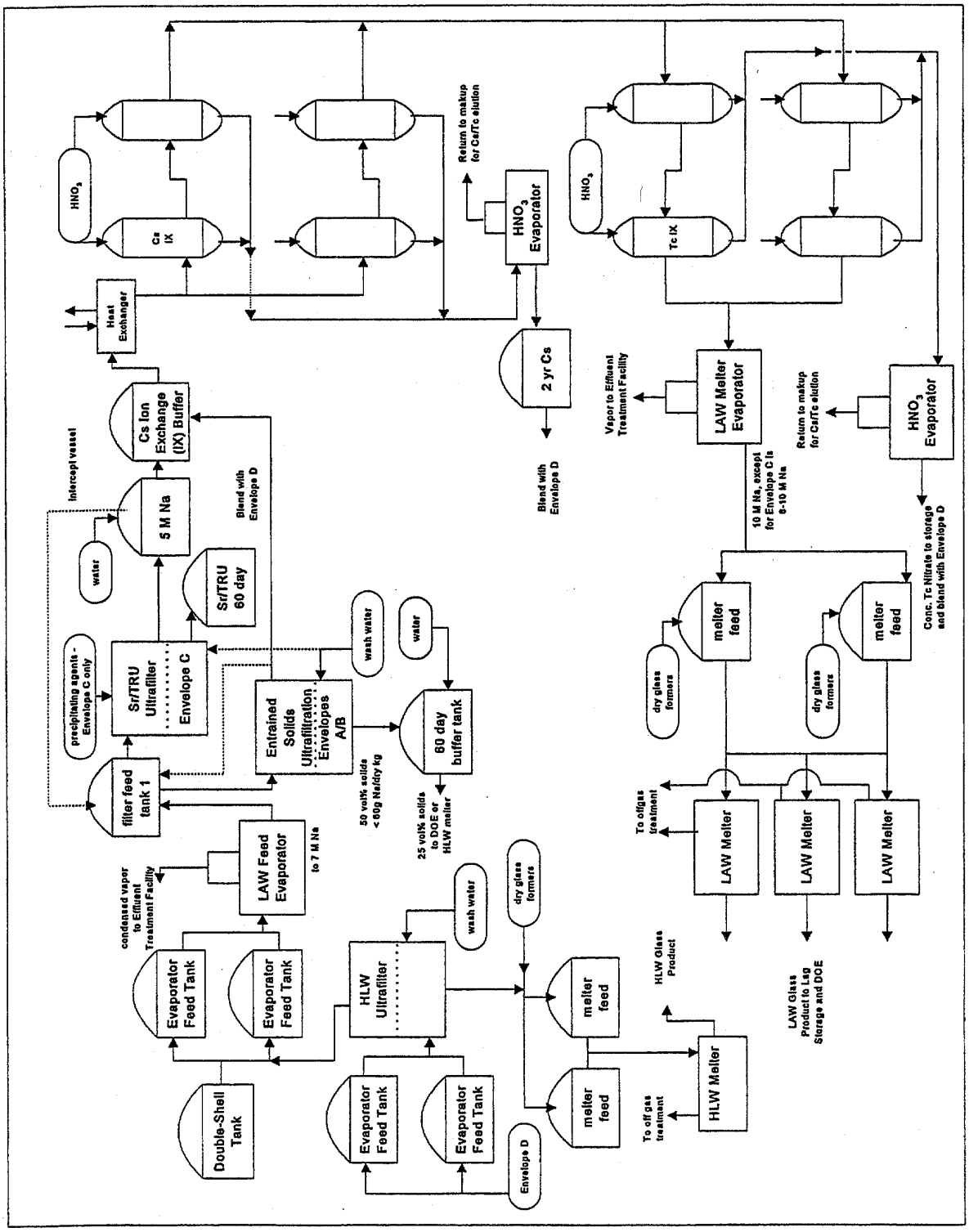

2.3.2 LAW Feed Evaporator

Processes designed to prepare the LAW for the melter require a consistent feed concentration. To help accomplish this, the waste is sent to an evaporator for water removal. The liquid stream from the evaporator continues to circulate in a closed loop until its sodium content is 7M. Then the stream is pumped to a hold tank to await the downstream process. The vapor stream is condensed and the condensate routed to the shared active condensate tanks, which receive condensate from several evaporators in the LAW pretreatment process.

2.3.3 Solids Removal by Ultrafiltration

For both options, the feeds are sent to the ultrafiltration loop to separate entrained solids. If the waste is Envelope C, strontium and TRU elements must be removed to meet the product specifications for the ILAW glass product. To accomplish this, reagents are added to precipitate strontium and TRU elements before sending the waste to the ultrafiltration loop. Continuous circulation through a crossflow filter removes the entrained solids and precipitate. For the LAW-only option, the precipitated solids, strontium carbonate, and a ferric floc containing the TRU elements, are returned to the DOE. For the HLW/LAW option, the precipitates are sent directly to be mixed with Envelope D feed for processing by the HLW Melter.

2.3.4 Cesium and Technetium Removal Using Ion Exchange

To meet ILAW product specifications, the radioactive cesium and technetium content of the LAW feed must be reduced. This is accomplished by passing the feed through successive ion exchange systems for cesium and technetium removal. The cesium is removed first. The cesium ion exchange medium is a SuperLigand- SL644^{tm} [1]. The technetium removal system uses Reillex -HPQ^{tm} resin.

Both systems have two sets of columns with two columns in series to a set. One set is collecting while elution and regeneration are occurring on the other set. When cesium or technetium can be detected in the effluent from its respective columns, the flow to that set of columns is suspended, and the LAW is diverted to the other set of columns.

The cesium and technetium are subsequently removed from the loaded columns, and the resin regenerated for reuse. Both resins have an anticipated useful life of 10 cycles, after which the spent resins are removed from the columns and replaced with fresh resin. For the LAW-only option, the spent resins are disposed of as radioactive mixed waste in accordance with DOE procedures for disposing of this type of waste. For the HLW/LAW option, the spent resins are blended with Envelope D feed and incorporated into the IHLW product.

2.3.5 Cesium/Technetium Nitric Acid Recovery

The eluates from both the cesium and technetium ion exchange are put through an evaporative process to recover some of the nitric acid and to concentrate the solutions. The recovered nitric acid is reused in the process.

[1] SuperLigand-SL644 is a registered trademark of IBC Advanced Technologies, Inc., American Fork, UT.

For the LAW-only option, the cesium concentrate goes to a neutralization tank to be prepared for recovery onto a solid substrate subsequently packaged and returned to the DOE for storage. For the HLW/LAW option, the cesium concentrate is sent to be mixed with Envelope D waste for processing by the HLW melter.

For the LAW-only option, the concentrated technetium solution is returned to the DOE for storage. For the HLW/LAW option, the concentrated technetium solution is blended with the Envelope D waste for processing in the HLW melter.

2.3.6 Cesium Recovery as a Solid

The storage of cesium as a dry powder is a requirement of the contract Specification 4.2.2 for the LAW-only option (DOE-RL 1996b). To meet this requirement, the cesium in the concentrate from the evaporator is adsorbed onto another ion-exchange material, crystalline silico-titanate (CST). The acid concentrate is first neutralized with sodium hydroxide, then passed through the bed of CST. The cesium-loaded bed is subsequently dried by a combination of its own heat generation and a slow passage of air. Once the air feed through the bed reaches its low moisture content limit, the canisters containing the bed are packaged in outer containers for up to 9 years of storage before being returned to the DOE.

2.3.7 LAW Melter Feed Evaporator

After the LAW stream has passed through the cesium and technetium ion exchange system, it is sent to the melter liquid feed evaporator for further concentration to 10M Na required for optimum glass formation. Envelope C waste may be 8 to 10M Na. If laboratory analysis shows that the process condensate is within discharge limits for radionuclide concentration, it is discharged from the building to the Effluent Treatment Facility (ETF), outside the TWRS-P Facility area. Otherwise, it is sent to the clean process condensate tank.

2.3.8 LAW Glass Melter

As many as three LAW glass melters operate in parallel to achieve a design throughput of 14.4 Mt of glass per day. The feed to the melters consists of a slurry of the concentrated LAW from the evaporator and a blended mixture of dry glass-forming chemicals. The present design assumes that the glass-forming chemicals are delivered to the Hanford Site in bulk by truck and stored in silos located near the waste treatment building.

A total of ten glass-forming chemicals (see Chapter 4.0 “Hazard Identification”) are envisioned to produce the required LAW glass recipe for feed Envelopes A, B, and C.

The dry chemicals are pneumatically conveyed from the storage silos to day tanks located within the facility. From the day tanks, the dry chemicals are delivered in the appropriate quantities into the blending transporter vessel where they are blended by pulses of compressed air. The thoroughly blended glass formers are stored in a storage hopper until required for use. There is one glass-former storage hopper per melter.

The glass melter feed consists of the LAW concentrate from the LAW evaporator blended with the proper mixture of glass-forming chemicals from the storage hopper. A batch of sampled LAW concentrate is transferred into the LAW melter feed preparation tank. Dry chemicals from the storage hopper are metered into the tank directly into the eye of the mixer impeller.

The thoroughly mixed feed slurry is then transferred into the LAW melter feed tank. Each melter feed vessel has three variable speed pumps that deliver the melter feed to water-cooled nozzles on the melter.

The LAW glass melters are joule-heated ceramic melters designed to incorporate the metal oxides in feed slurry into glass while the liquid water is vaporized. Each melter incorporates an integral cooling water jacket to all sides, the bottom, and the lid to reduce heat losses to the cell.

Each melter has two discharge chambers, each of which is attached to two container-filling ports. Nitrogen lift risers and/or a vacuum lift system removes the glass from the melters at approximately 1150 °C (2100 °F). The glass will then exit by gravity through one of the discharge chambers and filling ports into the steel ILAW container.

2.3.9 HLW Glass Melter

For the HLW/LAW option, in addition to the LAW glass melters, there is a single HLW melter. The feed to the HLW melter is concentrated Envelope D sludge, and other HLW feeds from pretreatment including strontium/TRU precipitate, cesium ion exchange eluate, and technetium ion exchange eluate. The design throughput of the HLW melter is 1.5 Mt of glass per day.

The glass former storage and feed to the day tanks supplying the HLW melter are by the same system that supplies the LAW melters. The HLW feed system is designed to produce different feed recipes to accommodate variations in the composition of Envelope D feed. Three glass-forming chemicals, silica, boric acid, and lithium carbonate, are currently identified as required to produce the glass for the desired recipe.

Weighing and blending of the dry chemicals and mixing with the HLW feed is essentially the same as for the LAW melters. The blended melter feed is sampled and tested for acceptable composition and then transferred to the HLW Melter Feed Vessel. From there, the feed goes to four water-cooled feed nozzles on the melter.

The HLW melter is an electric-powered, joule-heated, slurry feed melter. The operating temperature of the melter is approximately 1150 °C (2100 °F). In the melter, the feed flows across the molten glass surface and forms a cold-cap on the surface of the melt. In the cold-cap, water is first evaporated from the feed and released to the offgas system as superheated steam. The feed components then undergo chemical reaction and decomposition.

During the decomposition process, gases are formed and released into the melter plenum and offgas system. In addition, a fraction of the feed components is directly carried over to the offgas without incorporation in the glass. The solids and semi-volatile components are recycled back to the melter from the offgas system to increase the incorporation rate in the glass.

Glass is discharged from the HLW melter via one of two discharge chambers. Two chambers are provided for redundancy. Discharge is achieved by transferring glass from the bottom of the melter pool through a riser into a discharge chamber for subsequent pouring into a IHLW canister.

2.3.10 Vitrification Offgas Treatment

The gas streams from the melters include steam, air from the bubblers, and various acid gases formed by decomposition of the feed slurry components. These gases pass through a film cooler that cools the gas by direct injection of air, and a quench scrubber that removes particulates entrained in the gas stream; both components of the melter.

The offgas treatment systems treat the gas stream from the quench scrubber to remove potentially radioactive entrained aerosols and small particulates, and to decrease the acid gas content. The aim is to produce a gas that can be discharged to the atmosphere without exceeding the environmental discharge limits.

The LAW primary offgas system consists of a high-efficiency mist eliminator (HEME), a selective catalytic reduction (SCR) unit, and a condenser. The HEME removes 99% of the activity content that is in the form of liquid aerosols. The gas stream from the HEME is sent to the SCR. The liquids resulting from HEME operation, and from washing of the HEME, will collect in a sump, and be returned to the LAW melter feed evaporator.

The SCR unit reacts the nitrogen oxides in the gas stream with ammonia at 250-300 °C (480-570 °F), converting them to nitrogen and steam. The gas stream leaving the SCR is cooled to around 40 °C (100 °F) in a shell and tube condenser. The liquid stream from the condenser is collected and combined with other offgas liquid effluents and sent to the central effluent handling area of the TWRS. The offgas from the condenser is further treated to remove radioactive components and acid gases in a secondary offgas system.

The HLW primary offgas system consists of a HEME, a high-efficiency metal filter (HEMF), an iodine absorption unit, a condenser, and a wet scrubber. The function of the HEME is the same as for the LAW system. However, the 99% efficiency of the HEME is not sufficient for the HLW offgas. Therefore, the gases are heated to well above their dewpoint and then passed through the HEMF. The liquids resulting from HEME operation, and from washing of the HEME and the HEMF, collect in a sump and are returned to the HLW feed tank.

There is a significant quantity of iodine-129 present in the HLW offgas. Because iodine exists as a gas, it is not removed by the HEME and the HEMF. A dry adsorption unit is used to remove over 98% of the iodine gas. The sorbent bed of the adsorption unit, either silver nitrate-impregnated silica gel or silver-exchanged zeolite, is disposed of as a solid waste.

Following iodine adsorption, the HLW gas stream is condensed and the liquid disposed of similar to the treatment for LAW. A caustic scrubber removes residual activity and acid gases, as well as any carbon dioxide present.

2.3.11 Container Decontamination

The vitrified product containers for both the LAW and the HLW are constructed from stainless steel. After charging with vitrified waste, the containers are allowed to cool, and a stainless-steel lid is welded on. The LAW containers are rectangular in shape with external dimensions of 1.8 m by 1.2 m by 1.2 m (6 ft by 4 ft by 4 ft). The HLW containers are cylindrical canisters 4.5 m (15 ft) long with a diameter of 0.61 m (24 in.).

Contamination of the outer container walls could occur during filling. Activity on the outside of the container must be removed before the containers are handled for storage. After it is sealed, the product container is moved to a decontamination booth in a decontamination cell, where surface contamination is removed using ultra-high-pressure water. The washings are collected in the base tray of the decontamination booth, which drains to a dedicated catch vessel. The catch vessel is periodically discharged to a dedicated effluent treatment facility discharge vessel. The decontaminated container is transferred to the adjacent control cell for monitoring and eventually transferred to the vitrified product storage area.

2.3.12 Support Systems

Systems must be in place for supply and delivery of chemicals, and for treatment and routing of gaseous and liquid effluents from the various process steps. Those systems considered in the hazard evaluation are as follows:

1) Plant Waste Management
2) Secondary offgas treatment
3) Boiler water heat recovery
4) Outcell process reagents
5) LAW vitrification emergency offgas
6) Mechanical Handling
7) HVAC

This page intentionally left blank.

3.0 Hazard Analysis Methodology

The Hazard Evaluation Methodology section documents the Tank Waste Remediation System-Privatization (TWRS-P) Integrated Safety Analysis (ISA) process. Process flow diagrams (PFDs) were prepared, and hazardous characteristics of the chemical and process streams were collected. A hazard evaluation used to perform the ISA was selected based on the available information, the desired results, and available resources. The hazard evaluation, an organized effort to identify and analyze the significance of hazardous situations and to pinpoint weaknesses in the design involves preparation and review of the collected information by a team of experts in various fields. The results, initiators, safeguards, and consequences are tabulated in the fault schedule. Since the TWRS-P Facility process is complex in terms of the different process operations, the overall process was separated into operations units, and each unit was the subject of a hazard evaluation study. The unit process fault schedules in this section are preceded by the unit process description. The process description precedes the fault schedule, provides the necessary background, and serves as an easy reference.

3.1 Hazard Identification

As defined by the American Institute of Chemical Engineers (AIChE) Guidelines (AIChE 1992), a hazard is a physical or chemical characteristic of a material, system, process, or plant that has the potential for causing harm. Hazard identification for a process or facility requires specific definition of the undesirable consequences to be avoided, and identification of material, system, process, and plant characteristics that can produce those consequences.

For the purpose of this hazard analysis, the undesirable consequences are the release of radioactive or toxic materials or energy that may cause physical harm to the public, the collocated Hanford Site worker, or the facility worker, or that may result in environmental contamination. Identification of the hazards for the TWRS-P Facility process involved identifying and listing all process chemicals and the potential by-products of the process.

The chemical characteristics of each process chemical and potential process by-product were researched, using a variety of information including material safety data sheets (MSDS) and other published sources of chemical data. Hazardous characteristics of each material were identified, and an interaction matrix was compiled to analyze potentially hazardous interactions between the materials.

In addition to the potentially hazardous materials, a list of energy sources was also compiled. The focus was on potential phenomena that could result in an energy release sufficient to cause physical harm to humans or the environment, or to drive a release of hazardous materials to an individual receptor or the environment.

A survey of hazard assessments and operating experience of facilities similar to the proposed TWRS-P Facility provided a useful resource and check on the completeness of the hazard identification. Some of the other waste vitrification facilities examined were the Sellafield Vitrification Plants, the Savannah River Defense Waste Processing Facility (DWPF), and the West Valley Demonstration Project (WVDP).

The results of the hazard identification are presented in this document in Chapter 4.0 “Hazard Identification”.

3.2 Selection of a Hazard Evaluation Methodology

BNFL has developed a procedure for hazard identification of the proposed TWRS-P process. This is based on BNFL expertise in carrying out similar studies for nuclear chemical plant, and the need to achieve consistency with AIChE guidelines, Draft NUREG 1530, and 29 CFR 1910.

The hazard evaluation study conducted by BNFL as a result of its procedure is similar the AIChE What If/Check List (WI/CL) method. This section provides the rationale for the choice of the method BNFL used, describes how BNFL’s hazard evaluation study was performed and shows how the BNFL method and the WI/CL method correspond. The choice of a method or a combination of methods depends on a number of factors. The reason for conducting the analysis, the results needed from the analysis, the information available, the complexity of the process being analyzed, the personnel and experience in conducting the analysis, and the perceived risk all are considered in the choice.

Based on these factors, AIChE Guidelines provides a detailed flow chart (Figure 5.3 of AIChE 1992) that guides the choice of a particular method. Appendix A of Draft NUREG 1513 (NRC 1994) uses the same flow chart to recommend the choice of hazard evaluation method.

Figure 3-1 is an adaptation of the AIChE hazard evaluation selection flowchart as it applies to the selection of a hazard evaluation technique for review of the TWRS-P Facility process. Based on the input information available from the TWRS-P Facility design effort, preliminary engineering flow diagrams, preliminary facility layouts, and the hazardous characteristics of the treated waste streams, the hazard evaluation Selection Flowchart applied to the TWRS-P Facility, shown by a heavy line on the chart, leads to What-If Analysis (WI), Process Hazard Analysis, or WI/CL. A review of the following factors taken from Figure 5.2 in (AIChE 1992), was used in the selection of the final technique:

1) Motivation for the study
2) Type of results needed
3) Type of information available to perform the study
4) Characteristics of the analysis problem
5) Perceived risk associated with the subject process or activity
6) Resource availability and analyst/management preference

These factors are discussed in the following sections.

3.2.1 Motivation

The motivation for the study and the type of results needed are the most important factors requiring consideration. The study is a requirement of the TWRS-P Project contract (DOE 1996b). More specifically ISA development establishes the necessity of compliance with the requirements of Draft NUREG-1520 (NRC 1995). Therefore, a hazard evaluation must satisfy the regulatory review in accordance with Draft NUREG-1520. The requirements of hazard identification are stated in Section 4.5.3.7 of Draft NUREG-1520:

a.

I. A list of materials (radioactive, fissile, flammable, and toxic) or conditions that could result in hazardous situations. The list should include maximum intended inventory amounts and the location of the hazardous materials at the site.

II. A table showing potential interaction between materials or between materials and conditions that could result in hazardous situations.

b. The hazard analysis method should provide a tabular summary description of the potential accidents that could result in deviations from normal operations, internally initiated events (e.g., explosions, fires) and externally initiated events (e.g., floods, high winds, earthquakes). The description should list deviations from normal operations, the causes of such deviations, the unmitigated consequences of the resulting accidents and the level of quality and reliability established for each control. The listing should clearly indicate the linkage between each individual cause, the resulting consequences, and the control(s) used to prevent or mitigate the consequence. The magnitude of each consequence may either be evaluated (see Section 4.5.3.7.c) or may be assumed to exceed the consequences of concern stated in 10 CFR 70 (draft).

3.2.2 Type of Results Needed

The Section 4.5.3.7.a, requirement of a listing of hazardous materials and inventories and their potential interactions found in Chapter 4.0 “Hazard Identification” of the HAR are the input data for any hazard evaluation study. A tabular description of deviations from normal operations and external events, controls, or barriers, and the resulting consequence (a Section B requirement of Draft NUREG-1520 [NRC 1995b]) is a product of this and most hazard evaluation studies. The WI, Process Hazard Analysis, and WI/CL are mentioned in Draft NUREG 1513 (NRC 1994) as satisfying the U.S. Nuclear Regulatory Commission (NRC) requirements as defined in 10 CFR 70.

Thus, the regulatory requirements are consistent with the identification of the WI, Process Hazard Analysis, and WI/CL Analysis as satisfactory choices using the hazard evaluation selection chart shown in Figure 3-1. These three hazard evaluation methodologies provide the type of results required: accident sequences, controls, and a description of the consequences.

Figure 3-1. Flowchart for Selecting a Hazard Evaluation Technique for RPP-WTP (Sheet 1 of 2)

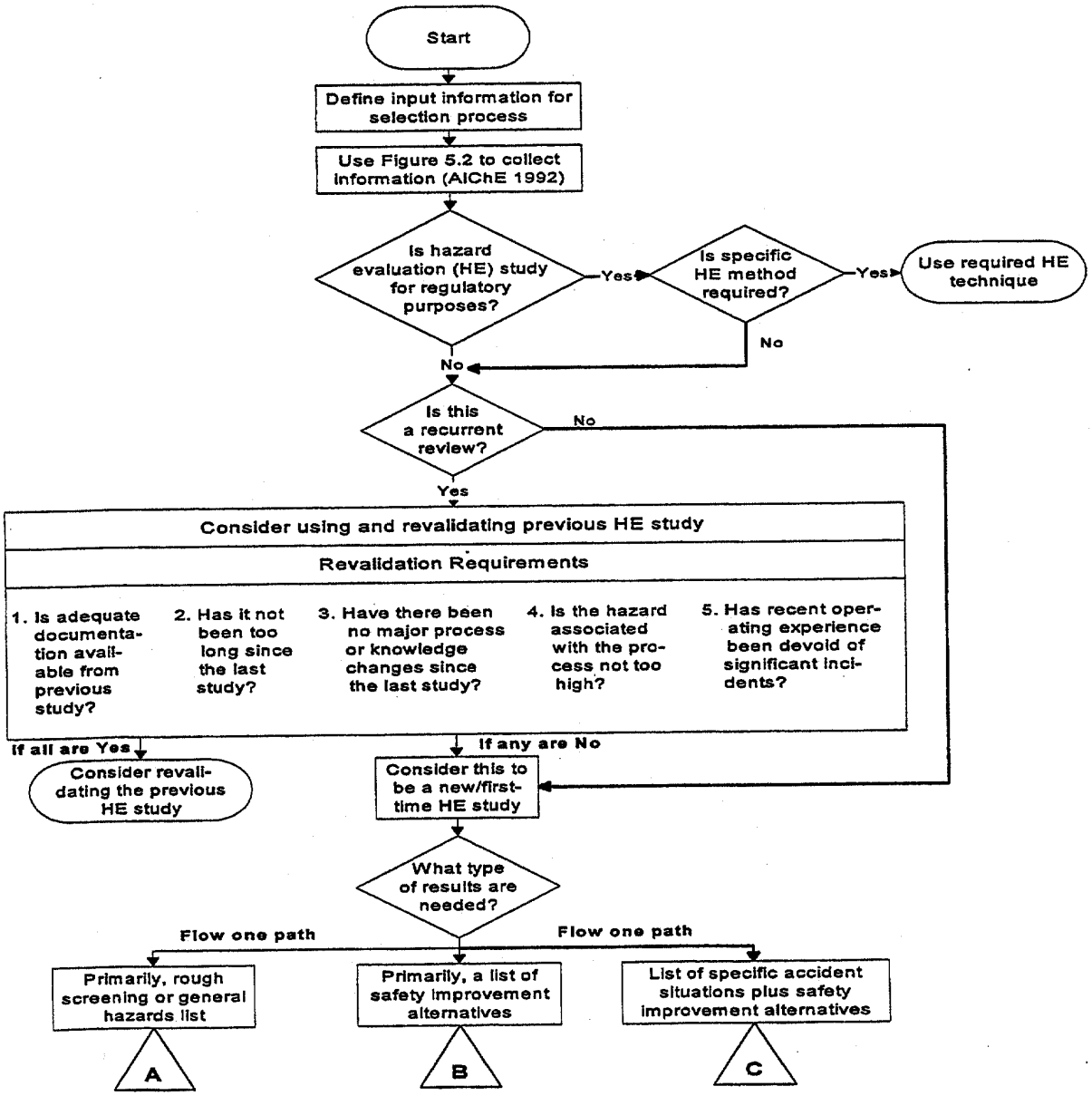

Note this flowchart is reproduced from figure 5.3 AIChE 1992.

Figure 3-1. Flowchart for Selecting a Hazard Evaluation Technique for RPP-WTP (Sheet 2 of 2)

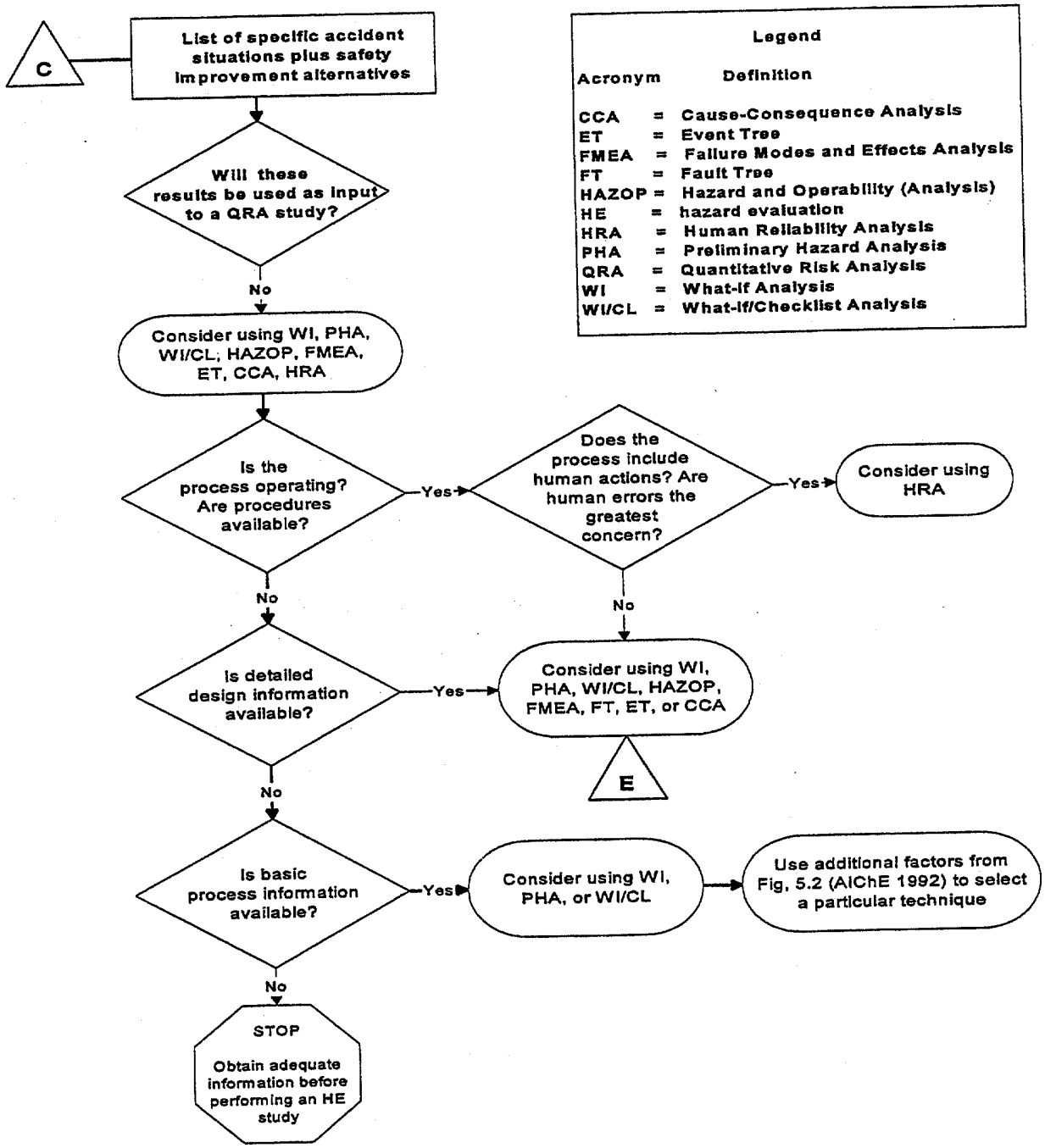

Note this flowchart is reproduced from figure 5.3 AIChE 1992.techniques.

3.2.3 Type of Information Available to Perform the Study

The TWRS-P Facility design is documented primarily in single line flow schematic diagrams and preliminary mass balances. Process and instruments diagrams that schematically show the process equipment, the flows in and out of this equipment, and the instrumentation, (i.e., controllers, alarms, and interlocks) will be available in Part B. The quality and completeness of the design defines the choice of hazard evaluation techniques. The AIChE Guidelines (1992) in Figure 5.1 provides a matrix of the "phase of plant life" cross-referenced to the hazard evaluation

For a plant or process in conceptual design, Figure 5.1 of the AIChE Guidelines (1992) lists the following hazard evaluation techniques:

- Relative Ranking
- Process Hazard Analysis
- What-If
- What-If/Checklist

The type and quality of the information available leads to the same conclusion as the hazard evaluation selection flowchart, in Figure 3-1, Sheet 2.

3.2.4 Characteristics of the Analysis Problem

Specific characteristics of the facility are factored into the choice of a hazard evaluation technique; (1) the complexity and size of the facility, (2) the type of process, (3) the type of operations, (4) the nature of the inherent hazards, and (5) the accident events or situations of concern. For a complex process such as the TWRS-P Facility, producing a consistent analysis requires careful consideration of the available time and resources when choosing a hazard evaluation method.

Because of the limited design detail available at this stage of the project, the TWRS-P Facility initial hazard evaluation was divided into modules. The hazard evaluation techniques appropriate for this conceptual stage of design are less time intensive than hazard evaluation techniques applicable to well-defined processes.

The hazard evaluation techniques of Process Hazard Analysis, WI and WI/CL are well suited for analysis of process and operations. Some methods such as WI, WI/CL, HAZOP Analysis, Event Tree Analysis and Human Reliability Analysis are better able to analyze batch processes than others (e.g., Fault Tree Analysis, Failure Modes and Effect Analysis, Cause-Consequence Analysis) because the latter methods cannot easily deal with the need to evaluate the time-dependant nature of batch operations (AIChE 1992). The process of vitrifying the Hanford tank waste is primarily a sequence of batch operations (e.g., ultrafiltration and ion exchange). Therefore, the PHA, WI, and WI/CL are applicable to TWRS-P Facility type of process.

3.2.5 Perceived Risk

A factor in the selection of a hazard evaluation technique is the nature of the hazards of the process. Toxicity, and by inference radioactive exposure, fires, reactivity hazards, and explosions can be analyzed by all the hazard evaluation techniques in the AIChE Guidelines (AIChE 1992). But the types of failures that can result in these hazards are single failures, multiple failures, loss of confinement, loss of function, process upsets, and hardware, software, procedural, or human failure. Complex, multiple failures require Fault Tree Analysis, Event Tree Analysis, Cause-Consequence Analysis, and Human Reliability Analysis. All these are hazard evaluation techniques that require information and a level of detail exceeding the current level of TWRS-P design.

The perceived risk of the process is related to the experience with the process and the continued relevance of that experience. The concern of perceived risk is viewed not only from the standpoint of the design and operating organization, which is experienced in the vitrification of waste, but also from the standpoint of the regulator and the stakeholders. It is necessary to demonstrate that a systematic hazard evaluation technique was chosen to mitigate the chance of missing an important accident situation. Thus, the more predictive techniques are preferred, such as HAZOP Analysis, WI/CL, and Fault Tree Analysis (AIChE 1992). The most predictive methods narrow the selection of the three choices from the flowchart, WI Process Hazard Analysis, and WI/CL, to one hazard evaluation technique, the WI/CL.

3.2.6 Resources Availability and Analysis/Management Preference

The last factor that could influence the selection of a hazard evaluation technique is availability of resources and preference. Having skilled practitioners of the chosen hazard evaluation technique and people with a knowledge and background in the design and operation of radioactive facilities are necessary for a quality evaluation.

The TWRS-P Facility is based on relevant BNFL experience and practice at the Sellafield Plant. The hazard evaluation meetings took place in conjunction with the design teams at BNFL in the UK, and Duratek where a suitable cross-section of disciplines was available.

The hazard evaluation team leaders and many of the participants in the hazard evaluation study are most familiar with the technique that has been routinely used by BNFL for its facilities. That technique uses the methodology similar to the WI/CL.

3.3 Hazard Evaluation Methodology

The WI/CL is used to examine the potential effects of events and their significance at a more general level than some of the more detailed approaches. The analysis procedure includes the preparation, the use of the checklist, the evaluation of each of the questions and concerns, and the documentation of the results.

3.3.1 Preparation

The selected hazard evaluation methodology is similar to the combination of What-If Analysis and Checklist Analysis as defined in the AIChE guidelines. This methodology uses a team approach unlike other techniques, such as Fault Tree Analysis, which can be performed by a single analyst and reviewed by a team. The evaluation resulting from this approach makes use of the team's experience and the creativity of a brainstorming process to raise What-If questions and use a checklist to fill in any gaps in the team's thought process. The following description of WI/CL derived from the AIChE Guidelines (1992) is, with a few noted exceptions, consistent with the procedure followed in the hazard evaluation study of the TWRS-P Facility.

A WI/CL consists of the following steps: (1) drawing upon previous operations experience in preparing for the review, (2) developing a list of What-If questions and concerns, (3) using a checklist to cover any gaps, (4) evaluating each question and concern, and (5) documenting the results. In the hazard evaluation of the TWRS-P Facility, steps 2 and 3 are reversed. This is recognized as an acceptable variation in the AIChE Guidelines (AIChE 1992, p. 123):

"A variation of this procedure is for the team to reverse the order of steps 2 and 3 or to develop What-If questions concurrently as they progress through a detailed checklist".

A qualified team is assembled by the hazard evaluation study leader who determines the physical and analytical scope of the proposed study, before holding the meeting, and if the activity is large, divides it into functions, physical areas, or tasks to provide some order to the review of the process. The TWRS-P Facility was reviewed in modules. The scope, preparation, and the Process Flow Diagram (PFD) reviewed in each of the modules is described in HAR Chapter 5.0 "Hazard Evaluation by Process Step" following the description of the process covered for a particular module. The process module and the team composition was determined by the team leader and the process engineers in a hazard evaluation study pre-meeting prior to the hazard evaluation study team meeting. Engineering Flow Diagram (EFD), waste compositions, and preliminary facility layouts are made available to the hazard evaluation team at least one week in advance of the first programmed hazard evaluation meeting. It is the responsibility of the designer to circulate the information to team members.

As defined by the AIChE Guidelines (1992), in industry practice an appropriate checklist is developed by the team leader for the team use in conjunction with the WI. The checklist used for hazard evaluation of the TWRS-P Facility process is the checklist in common use to identify and assess the significance of hazardous situations in BNFL designs and facilities. The hazard evaluation study team reviewed the BNFL checklist in the hazard evaluation pre-meeting and excluded or added checklist items based on their experience and familiarity with the design and with the hazard evaluation method. The hazard evaluation study team was given the opportunity to comment on and revise the checklist.

Suggested guidewords are listed at the end of Chapter 6 of the AIChE Guidelines (1992). Guidewords are used in the hazard evaluation meetings to elicit responses from team members and to ensure all potential deviations from normal operations are covered.

The BNFL checklist covers the categories of deviations found in the example checklists in the AIChE Guidelines (1992). Cross-matching of AIChE checklist words with the BNFL checklist finds that extreme weather and seismic are unlisted in the AIChE Guidelines (1992) example tables. Comparison also shows that BNFL's list is thorough in encompassing the variety of typical deviations from normal operations, with exception of "Chemical Reaction". Although Chemical Reaction is not specifically addressed, the BNFL checklist does include "Fire" and "Explosion/Overpressure" which indirectly address chemical reaction.

In contrast, the example checklists provide a more detailed listing. For example, occupational safety is cross-referenced to the categories of electrical, heat and temperature, mechanical, and vibrational, each with a detailed list of hazards. The listed hazards in these categories are worker hazards in the operating area of the plant, an area of limited design at this time, but will be brought to a level consistent with the process in the next phase of design. The early design of the process will be fully developed to set the stage for the next phase of design. A hazard evaluation of the next stage will be able to move from categories of deviations to specifics.

Process activities or operations often consist of distinct steps, each with different possible deviations from normal operations at each step. All variations in the operation were studied in the hazard evaluation study. For example, two activities in ion exchange are the adsorption or loading of specific ions in solution by the ion exchange medium. After this phase of the operation, the adsorbed ions are eluted off the ion exchange medium. Because the hazards are different in each process step, the team leader guides the team through a study of the loading and elution steps. A hazard evaluation study that is focused simply on the equipment and overlooks the changes in the operation is likely to be found incomplete. In the pre-meeting, with the help of the process engineers, the team leader identifies each process step or activity to be studied in the hazard evaluation meeting. This satisfies Section 4.6.b.v of Draft NUREG-1520 (NRC 1995b), "...it [the hazard evaluation technique] addresses all modes of operation including startup, operation, shutdown, and maintenance."

3.3.2 BNFL PHA Process

AIChE Guidelines (1992) recognizes as acceptable a variation on the procedure for a WI/CL in which the team develops What-If questions as they progress through a detailed checklist. Before the hazard evaluation meeting, a training session is held for those that have not previously participated in a hazard evaluation study. This training ensures that team members understand the procedure and that full and informed participation in the exercise takes place. The training consists of information covering the reasons for conducting a hazard identification and evaluation, the use of the checklist, how the meetings will be conducted, and how the results will be documented. The method of team selection, including qualifications and limitations on the team size, are explained. Details of necessary preparation for the meeting, and the method for review and closure of the study results are discussed.

A designer or process engineer who has knowledge of the facility and expertise in the area of the review begins the meeting by giving a description of the activity or the process operation. The team then considers each checklist item to see whether any potential accident situations or concerns arise. For the What-If part of the review on a new or a first-time application, preliminary questions are developed by team members prior to the meeting (AIChE1992). In practice for the TWRS-P Project hazard evaluation study, unless there was an interface concern from the review of another module, the guidewords were used by the leader to initiate the cause and effect thought process of team members. What-If questions were formulated during the hazard evaluation meetings.

The subject process step and the checklist item are reviewed by team members who use their combined expertise and team interaction to express concerns. The scribe records the question and concerns. The team leader leads the team through each item on the checklist. This process is repeated for each area or step of the process or activity. Table 3-1 is an example of the raw data recorded on a Study Record Sheet from the hazard evaluation meetings for the TWRS-P Project.

There are two approaches to the conduct of the meeting. The preferred approach, according to the AIChE Guidelines (1992), is to first list all the safety concerns and then begin their consideration. The other approach is to consider each question and concern one at a time, with the team determining the significance of the situation as it is brought up before soliciting other questions or concerns from the team. Both ways can work, however the momentum of the brainstorming process to raise questions and concerns is interrupted if the team stops to address each concern, as in the second approach.

The BNFL process was a combination of the two approaches. For each question presented, the team identified the potential hazard, engineered features, possible solution by the way of design changes, and the need for more information. However, the process is open to new questions. During the response to the concerns of safeguards, new questions are conceived and action items that require additional study are noted and discussed.

The hazard evaluation team reviewing a particular module reconvened for a second meeting to qualitatively evaluate the frequency of the event and its consequences to the worker and public. The period between the initial meeting and the reconvening allowed the team to come back refreshed and qualitatively determine the effect of the accident implied by the situation or concern.

Table 3-1. Hanford TWRS-P Study Record Sheet

Keyword	Initiating Event	Hazard Scenario	Design Provision	Assumptions	Notes	Action Required
External Dose	Extended shutdown. Overfilling of DST. Leak of tank to annulus. Tank failure due to rupture.	Additional maintenance activities required. Misrouting of feed liquors. Loss of liquor to annulus. Vent system pulls up bottom of tank-distortion.	Leak detection of liquor in the annulus. Secondary vent system. Cannot empty tank below 6".		TWRS FSAR report listing put forward for discussion (See Mickey Beary action in Plant Area 1 under keyword "Fire". Any additional concerns have been listed in this record. Primary tank related concerns. The 6" heel will prevent uplifting of tank base by vent pulling a vacuum.	

The team leader takes the listing of questions and concerns, safeguards, and recommendations or action items prepared in the meetings and summarizes them on the fault schedule. The fault schedules for each process step are reproduced in Chapter 5.0 "Hazard Evaluation by Process Step". The hazard evaluation techniques identified not only safety concerns, some of which were determined in the follow-on meetings to be of negligible consequences, but also operability concerns. Maintenance is a TWRS-P Facility checklist item. The fault schedules reproduced in Chapter 5.0 include only the safety concerns. Maintenance, operability, and environmental fault schedules are listed in the Appendix A through C.

3.4 Ranking of Hazards

The hazards of this process are ranked on qualitative estimates of consequence to the worker, the public, and the facility. A qualitative estimate of the expected frequency of the event also provides information for ranking. Before describing the process of ranking, it is important to understand what information the hazard evaluation technique selected provides for the purpose of ranking the hazards. The applicability of various hazard evaluation techniques to ranking of accident scenarios is presented in Table 3-2. This table is adapted from Table 7.5 of the AIChE Guidelines (1992).

Table 3-2 shows that WI/CL can be used for consequence ranking but fails to provide frequency information. Draft NUREG 1513 (NRC 1994) states:

> "if the results of the Integrated Safety Analysis (ISA) are expected to be used as input into QRA [Quantitative Risk Assessment] study, then HAZOP, FMEA, Fault Tree, Event Tree or Human Reliability Analysis are the approaches recommended by the AIChE (1992)."

The HAZOP, Failure Modes, and Effects Analysis (FMEA), Fault Tree, or the Event Tree are hazard evaluation techniques that, according to Table 3-2, have the attribute of providing frequency information needed to rank accident scenarios by frequency. These hazard evaluation techniques that provided frequency information were not a possibility for this analysis using the AIChE selection chart. However, the hazard evaluation team in discussions about potential cause and effect of particular accident scenarios in the follow-up session assigns the accident scenario to a frequency category based on the team's judgement and experience. The information necessary to support the team experience and judgement in this matter will be demonstrated in the next stage of design. At that stage design documents such as Process and Instrument Diagrams that will support a HAZOP analysis, an FMEA, Fault Tree Analysis of Event Tree Analysis will be available. The assignment of a particular accident to a consequence category will be verifiable when the consequences are estimated in the initial safety analysis.

Ranking by consequence is an attribute of the WI/CL method. The hazard evaluation team assigns a consequence value based on a qualitative or semi-quantitative scale to each accident. The scale is based on a simplified description of the consequence of potential accidents. Examples of such scales for both frequency and consequence are found in the AIChE Guidelines (1992).

Table 3-2. Prioritization Attributes of Hazard Evaluation Techniques

Technique	Provides Accident Scenario Information	Provides Frequency Information?	Provides Consequence Information?	Event Ranking Possible? (with typical results)	Comments
Checklists	No, specific scenarios usually not identified	No	No	No	
Safety Review	No, specific scenarios usually not identified	No	No	No	
Dow and Mond Indexes	Yes, on a unit or a major system basis	No	Yes	Consequence ranking	
Process Hazard Analysis	No, specific scenarios usually not identified	No	Yes	Yes	
What-If and What-If/Checklist Analysis	No, specific scenarios usually not identified	No	Yes	Consequence ranking	
Hazard and Operability (HAZOP) Analysis	Yes	Yes	Yes	Consequence ranking	Since detailed causes and consequences are identified, simple risk ranking is possible
Failure Modes and Effects Analysis (FMEA)	Yes	Yes	Yes	Consequence ranking	See FMECA

Table 3-2. Prioritization Attributes of Hazard Evaluation Techniques

Technique	Provides Accident Scenario Information	Provides Frequency Information?	Provides Consequence Information?	Event Ranking Possible? (with typical results)	Comments
Failure Modes, Effects, and Criticality Analysis (FMECA)	Yes	Yes	Yes	Yes	The criticality assessment in a FMECA provides a simple risk ranking
Fault Tree Analysis (FTA)	Yes	Yes, based on size and number of cut sets and type of failures involved	No	Frequency ranking based on structural importance	Quantitative FTA techniques are available to estimate top event frequencies
Event Tree Analysis (ETA)	Yes	Yes, based on number of accident scenarios and the number and type of failures involved	Yes, consequence categories are assigned for each scenario	Yes	Quantitative ETA techniques are available to estimate accident scenario frequencies
Cause-Consequence Analysis (CCA)	Yes	Yes, based on number of accident scenario and number and type of failures involved	Yes, consequence categories are assigned for each scenario	Yes	Quantitative CCA techniques are available to estimate accident scenario frequencies
Human Reliability Analysis	Yes	Yes, based on number and length of scenarios and type of human error involved	No	Frequency Ranking	Quantitative Human Reliability Analysis techniques are available to estimate human error probabilities

The hazard evaluation team consensus on consequence to the worker and public is based on the inventory of hazardous material and the energy released during the accident. The energy released affects the dispersion of radioactive and toxic material and may result in failure of barriers. Explosions, fires, and failures under high pressure, depending on the inventory, are events that are likely to be the most serious in the comprehensive list of accidents generated by the hazard evaluation study.

Substantiation of the severity categorization is a subsequent activity for the safety analysis and will be reported in the Initial Safety Analysis Report (ISAR) Section 4.7, “Results of the ISA”. There, the consequence resulting from the accidents ranked as those with the highest risk will be estimated. Before the accidents identified in the WI/CL are ranked, the accidents are assigned to frequency and consequence categories.

In the follow-up meeting the hazard evaluation team discusses the causes and effects of each particular accident scenario that was identified in the initial meeting. The team assigns the accident scenarios a frequency category listed in Table 3-3 and a consequence category from Table 3-4.

Table 3-3. Frequency Categories

Frequency Category (Fault Schedule)	Description	Frequency (F) of Occurrence (per yr.)
4	Normal Events: Events/hazardous situations that may occur regularly in the course of facility operations	F>1
3	Anticipated Events: Events/hazardous condition of moderate frequency that occur once or more during the life of a facility	$1>F>10^{-2}$
2	Unlikely Events: Events/hazardous conditions that are not expected, but may occur during the lifetime of the facility	$10^{-2}>F>10^{-4}$
1	Extremely Unlikely Events: Events/hazardous conditions that are not expected to occur during the lifetime of the facility, but are postulated because their consequences have potential for a significant release	$10^{-4}>F>10^{-6}$

Table 3-4. Definition of Consequences

EFFECT	CONSEQUENCE			
	Negligible (1)	Minor (2)	Serious (3)	Major (4)
General Definition. The effects given below are more detailed definitions and examples of this entry.	Negligible worker and public impact	Minor impact on the workers, public or environment	Considerable impact on the worker or the environment; only minor public impact	Considerable impact on the workers and public impacts or the environment
Impact on Public				
Dose Rates	<= 100 mrem / yr.	<= 100 mrem / event	5 rem / event	25 rem / event
Hazardous Release (i.e., a release of radioactivity.)	Releases within exposure standards	Releases above normal causing investigation and justification to regulatory authorities, but with operations continued.	Releases exceed dose standards causing regulatory authorities to temporarily shut down plant.	Major release causing regulatory authorities to permanently shut down plant.
Impact on Workers				
Criticality (Note the safety criterion is assumed to be no criticality allowed)	Full margins retained	Some erosion of margins requiring corrective action.	Reduction in margins requiring increased monitoring and changes in plant operation during the event.	Margins to criticality lost. Plant shutdown and plant cleanup.

Table 3-4. Definition of Consequences

EFFECT	CONSEQUENCE			
	Negligible (1)	**Minor (2)**	**Serious (3)**	**Major (4)**
General Definition. The effects given below are more detailed definitions and examples of this entry.	Negligible worker and public impact	Minor impact on the workers, public or environment	Considerable impact on the worker or the environment; only minor public impact	Considerable impact on the workers and public impacts or the environment
Radiation Dose Rates	Exposure rates compliant with zoning scheme.	Exposure rates increased above normal	Exposure rates >20 mrem/h in large parts of operating area with unrestricted worker access	Exposure rates >20 mrem/h in unclassified areas
Contamination Levels	Contamination levels compliant with zoning scheme	Contamination levels increased above normal	Contamination levels > 100 DAC in large parts of operating area with unrestricted worker access	Contamination levels > 100 DAC in unclassified areas
Worker Health (applicable to all causes – radiation, contamination, toxic chemicals, accidents at plant, etc.)	No effects	First aid may be required, but continued working is possible	Urgent medical attention and time off work may be required	Permanent disability or death
Facility Integrity				
Facility Damage	No effects	Unscheduled maintenance may be required: there may be some reduction in facility production.	Facility shut down for major repair.	Facility damaged beyond economic repair

Note: < = is “less than or equal to”

DAC = derived air concentration

3.5 Candidate Accident Selection

The WI/CL technique has been used to assign the likelihood of occurrence of the deviation identified in the hazard evaluation study. The qualitative scale of Table 3-3, “Frequency Categories” and Table 3-4, “Definition of Consequences” are implications of the effects of the deviation from normal operations. The hazard evaluation teams, in the follow-up session to the hazard evaluation review meetings, assign each deviation to a frequency and consequence category.

After determining the appropriate frequency and consequence categories for each accident scenario, a risk matrix (Figure 3-2) is used to identify the most serious or bounding accidents. The number in each risk matrix cell corresponds to the category numbers of frequency and consequence category for each accident. Risk is a combination of frequency and consequence and is often expressed as the mathematical product of frequency and consequence. The numbers in the cells of the risk matrix correspond to category numbers of the modified example of risk-based categories from the AIChE Guidelines (1992) adapted and presented in Table 3-5. The example risk table has the higher risk corresponding to the higher number. Table 3-5 has the higher number corresponding to the higher risk.

Figure 3-2. Example Risk Matrix

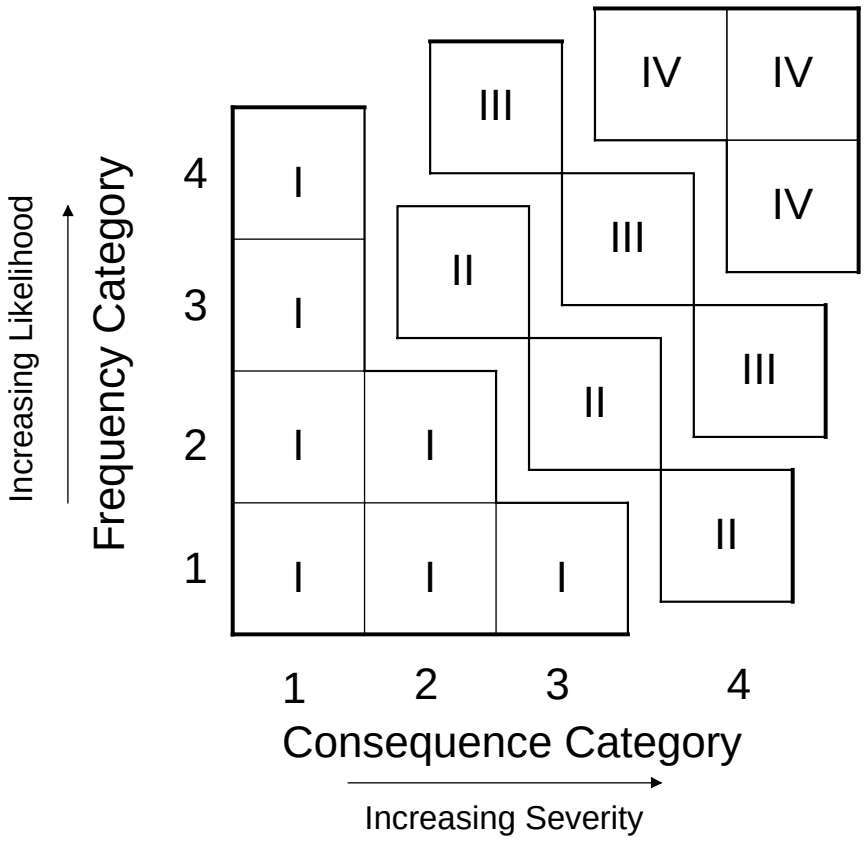

Table 3-5. Example Risk Ranking Categories (from AIChE 1992)

Number	Category	Description
IV	Unacceptable	Should be mitigated with engineering and/or administrative controls to a risk ranking of II or less within a specified time period such as 6 months
III	Undesirable	Should be mitigated with engineering and/or administrative controls to a risk ranking of II or less within a specified time period such as 12 months
II	Acceptable with Controls	Should be verified that procedures or controls are in place
I	Acceptable as is	No mitigation required

The risk matrix is a tool for visualizing high-risk events and identifying equivalent risk accidents. Accidents that are closer to the upper right corner (Categories IV and III) are higher risk events (i.e., they have higher frequency and consequences) than the events below and to the left (Categories I and II) (AIChE 1992). If frequency and consequence categories are selected consistently (i.e., if the same ratio between adjacent categories is used for both frequency and consequence categories), events on a diagonal from the upper left to the lower right are of equivalent risk (AIChE 1992).

The frequency and consequence categories produced by the extended WI/CL methodology allows the "binning" of accidents in the risk matrix. The accidents in the risk matrix cells with the higher risk numbers (above the diagonal running from upper left to lower right) are candidates for bounding accident analysis in the Initial Safety Analysis. Ranking or binning of accidents according to risk will be documented in ISAR Section 4.7, "Results of ISA".

A second method that will be used to validate the selection of candidate accidents for the ISAR is a consequence-based approach. A listing of accidents will be prepared for each checklist item and the accidents will be listed in order of consequence. This listing will eliminate the possibility of an accident being overlooked because of the low likelihood of occurrence. The accident with the highest assigned consequence for each checklist item will be a candidate for selection for consequence analysis. Based on this analysis, the risk-based sorting of accidents will be reviewed to determine what additional accidents should be selected for accident analysis.

A combination of risk-and consequence-based approach to the selection of candidate accidents was considered to be better than relying only on the common practice of locating accidents in a risk matrix. Risk-based ranking, because of the inherent uncertainties at this stage of the design, may have skewed the accident selection process. Supplementing this ranking with a ranking based on consequence eliminates inconsistency that may have been introduced in assigning frequencies.

In HAR Chapter 6.0, "Hazard Evaluation Results Summary", the candidate accidents were determined based solely on consequences.

3.6 Action Items

In addition to recording the accident scenario, the consequence, and the safeguard, the hazard evaluation team usually develops a list of action items for improving the safety of the facility operations based on the WI/CL tabular results. The "Actions Required" column on the TWRS-P Facility study record sheet (Table 3-1) is consistent with the typical format for a What-If Analysis Worksheet found in the AIChE Guidelines (1992). The difference is in semantics; the study record sheet has a column heading "Action Items", and in the AIChE Guidelines, the heading is "Recommendations". Both terms refer to ways for improving safety.

These action items can be categorized into design changes subject to further study, or questions of the nature of a hazard raised by the hazard evaluation team. In both cases, the action item is assigned in the hazard evaluation meeting and a date for a report to the team leader is scheduled. After all responses to the action items are due, the hazard evaluation team is reassembled to formally close out the action item or to determine an action plan for closure. Most of the outstanding action items will be addressed in detailed design, Part B. At the start of Part B design, outstanding actions that are design-related will be reassigned by the Hazard Evaluation study team leader and a new due date will be established. A list of the action items generated during the hazard evaluation study, and the actions taken to resolve them, are a part of the hazard evaluation records.

4.0 Hazard Identification

This section provides a listing of the potentially hazardous materials and the energy sources that are anticipated during implementation of the Tank Waste Remediation System-Privatization (TWRS-P) Facility process. For process materials, anticipated quantities and locations are specified, where known. Because the design is conceptual, specific details of location and quantity of some materials are not yet available and have been indicated as "to be determined" TBD in the tables. Detailed information will be supplied when the hazard analysis is updated for future design stages. The nature of any potential hazard presented by the materials is described, and chemical incompatibilities and potential material interactions are identified.

The hazard identification also includes a discussion of the energy sources in the facility. The major energy sources associated with the process are tabulated and quantified, where possible at this stage of design.

A survey of the hazard analyses and operating histories of other waste vitrification facilities provides an additional check on the completeness of the hazard identification. Hazard analysis for the Defense Waste Production Facility (DWPF) at the U.S. Department of Energy (DOE) Savannah River Site, and the West Valley Demonstration Project (WVDP) were obtained for comparison purposes. Reports to DOE of off-normal occurrences, Technical Safety Requirements (TSR) violations, and invocation of Limiting condition for Operation (LCO) Status for both DWPF and WVDP were examined to identify potential similar hazards for the TWRS-P Facility.

4.1 Hazardous and Radioactive Materials

This section discusses the major concentrations of radioactive inventories in the facility. It also provides proposed inventories of the chemical materials for the process and discusses the known hazards for each. A matrix of potential chemical interactions is provided.

4.1.1 Radioactive Materials

The TWRS-P Facility processes liquid radioactive waste from the Hanford tanks into the final glass product. Potential feed materials to the facility are specified in the contract (DOE-RL 1996b).

For the low-activity waste (LAW)-only option, the waste feeds to the facility consist of liquid feeds with an insoluble solids content less than 5 volume percent of the transferred waste. Three feed types are specified. From the standpoint of radioactive inventory, the Envelope B Feed is higher in cesium-137 than Envelope A or C Feed. Envelope C feed is higher in transuranics (TRU) and strontium-90 content than Envelope A or B. On average, the facility processes about 50 m^3 per day of waste at a concentration of 3M sodium regardless of the envelope. The facility would receive the waste in approximately 200 m^3 batches. The maximum concentration of LAW feed from tank 106-AP would be 7M sodium.

The high-level waste (HLW)/LAW option adds the capability to process waste from the Hanford Aging Waste from 241-AZ Tank Farm, and sludge retrieved by sluicing from single-shell Tank C-106. This waste has highly radioactive solids content.

Through the course of the process, radionuclide inventories are separated and concentrated in various forms. Table 4-1 provides a summary of the major radioactive waste streams in the plant, their location, and assumed radioactive content as derived from the contract specifications for the waste feed and the mass balance calculations for the process steps.

Table 4-1. Major Radioactive Streams

Radioactive Stream	Activity (TBq)							Location
	^{137}Cs	^{90}Sr	^{99}Tc	^{241}Am	^{239}Pu	^{240}Pu	Others	
Low-activity waste (LAW) Feed Material: at 7M Na Envelope A Envelope B Envelope C	 6,000 84,000 6,000	 60 60 1,120	 10 10 10				 0.68 TRU 0.68 TRU 4.2 TRU	Stored in 227 m^3 (60 kgal) LAW Feed Receipt Tank. Design inventory per batch: 200 m^3 (33 kgal) liquid and 1.5 m^3 (0.4 kgal) solids
High-level waste (HLW) Feed Material at 31g/l	22,000	23,000	40	320	7	2	50 ^{134}Cs 20 ^{60}Co 120 ^{154}Eu 70 ^{155}Eu 7 ^{244}Cm 50 ^{241}Pu 2E-4^{235}U	Stored in 227 m^3 (60 kgal) HLW Feed Receipt Tank. Design inventory per batch: 200 m^3 (53 kgal)
Cesium Ion Exchange	9,000							Stored in 1,050 m^3 (280 gal) column C2201, C2202, C2203, or C2204
Cesium Product (LAW & HLW option)	200,000							Stored in 56 m^3 (15 kgal) Cesium and Technetium Product Storage Tank
Technetium Product (LAW-only option)	0	0	860	0	0	0		Stored in 227 m^3 (60 kgal) Technetium Product Storage Tank
Strontium /transuranics (TRU) Product (LAW & HLW / LAW options) Envelope C only	 370	 7,300	 0.62				 2 TRU	Stored in 227 m^3 (60 kgal) Strontium / TRU Storage Tank.
Entrained Solids Product (LAW & HLW / LAW options) Envelope A Envelope B Envelope C	 470 2,600 320	 5 2 6,300	 0.8 0.6 0.5				 0.05 TRU 0.6 TRU 2 TRU	Stored in 227 m^3 (60 kgal) Entrained Solids Product Storage Tank.
Crystalline silico-titanate (CST) cesium canisters	6,000							Cesium is adsorbed onto CST and packaged in containers
High Level Melter Contents[b]	70,000	30,000	1,200				384 TRU	Within the HLW Melter

Notes
a Only the feed tanks, product tanks, and HLW melter are shown. These are believed to represent the largest quantities of radioactive material in the facility. Quantities are on a per batch basis

b From GTS Duratek, 1997a, *TWRS Privatization GTS Duratek Melter Systems Process Design Freeze Package*, and GTS Duratek, 1997b *TWRS-P Project, HLW Melter System 50 Percent Conceptual Design Report*, Rev. 0, (page 20 references a 9-day residence time for glass product).

4.1.2 Process Chemicals

A number of chemical compounds are used throughout the process for various purposes. Table 4-2 lists chemicals by process step, storage quantities, and locations. Table 4-3 summarizes the results of a literature search on the hazardous characteristics, if any, of the process chemicals and potential by-products.

Table 4-2. Process Chemicals

Material	Location	Quantity
Entrained and Strontium/Transuranics (TRU) Solids Removal (Envelope C)		
19M NaOH	Out of cell Tank	Day Tank V5101 1,400 gallons (5.3m^3)
3.5M $Fe(NO_3)_3$	Out of cell Tank	Day Tank 500 gallons (1.9 m^3)
1.0M $Sr(NO_3)_2$	Out of cell Tank	Day Tank 1,700 gallons (6.4 m^3)
Cesium Removal Using Ion Exchange		
Ion Exchange Resin SuperLigand – SL644	In cell vessel	Cesium Ion Exchange Columns C2201 and C2202; C2203 and C2204 1,050 L(280 gal)/column
0.5M NaOH	Caustic Rinse Tank Caustic Rinse Collection Tank	Capacity of V2202 and V2203 – 1,500 gallons (5.3 m^3) per tank
0.5M HNO_3	Made up from 12.2M HNO_3 Makeup/storage/day tank	Day Tank V2306 200 gallons (.76 m^3)
5.0 M NaOH	Caustic Regeneration Tank	Day Tank V5102 500 gallons (1.9m^3)
Technetium Removal Using Ion Exchange		
Technetium Ion Exchange Resin Reillex-HPQ	In cell vessel	Technetium Ion Exchange Columns C2601 and C2602; C2603 and C2604. 1,050 liters (280 gallons) per column
0.5M NaOH	Caustic Rinse Tank V2601 Caustic Rinse Collection Tank V2602	Day Tanks V2601 and V2602 each tank 1,500 gallons (5.3 m ^{3})
8.0M HNO_3	Made up from 12.2M HNO_3 Makeup/storage/day tank	Day Tank V5101 250 gallons (.95 m^3)
5M NaOH	Used to make up 0.5M NaOH Stored in Day Tank	Day Tank V5102 500 gallons (1.9 m^3)
Nitric Acid Recovery		
Cesium IX Eluate Concentrated to 0.5M HNO_3	In cell vessel concentrates cesium column eluate reduced to 600 L (158 gal) concentrate	Evaporator V2303 650 gallon (2.4 m^3) Buffer Tank V2305 150 gallons (.57 m3)

Table 4-2. Process Chemicals

Material	Location	Quantity
Cesium Recovery as a Solid (Low-activity Waste [LAW] Only)		
Crystalline silico-titanate (CST)	Cylindrical Canisters 32 cm in diameter by 131 cm long (1.1 ft diameter by 4.5 ft long)	About 40 capsules for proposed process strategy
8M NaOH	Neutralize Acid Solution from Evaporator make up from 19M NaOH	Day tank V5101 1,400 gallon (5.3 m^3)
Technetium Nitric Acid Recovery		
Technetium IX Eluate Concentrated to 0.5 M HNO_3	In cell vessel concentrates technetium column eluate	Evaporator V2703 650 gallon (2.4 m^3) Buffer Tank V2705 150 gallons (.57 m3)
Cesium and Technetium Fresh Resin Addition		
Ion Exchange Fresh Resin SuperLigand -SL644	Stored in out of cell tank	Day Tank V2801 1,400 gallons (5.3m^3)
Ion Exchange Fresh Resin Reillex-HPQ	Stored in out of cell tank	Day Tank V2802 1,400 gallons (5.3m^3)
5.0M NaOH	Stored in out of cell tank	Day tank V5101 1,400 gallon (5.3 m^3)
Cesium and Technetium Resin Recovery		
Spent Ion Exchange Resin SuperLigand -SL644	In cell tank	Spent Resin Tank V2901 2,800 gallons (10.6 m^3)
Spent Ion Exchange Resin Reillex-HPQ	In cell tank	Spent Resin Tank V2901 2,800 gallons (10.6 m^3)
LAW Melters and High-level Waste (HLW) Melter		
Dry Glass-Former Chemicals	Storage Silos outside RPP-WTP	30-day supply
Alumina – Al_2O_3	Storage Silo	43,109 kg (95,040 lbs)
Boric Acid – H_3BO_3	Storage Silo	170,288 kg (375,420 lbs) for LAW 10,500 kg (23,148 lbs) for HLW
Wollanstonite – $CaSiO_3$	Storage Silo	28,740 kg (63,360 lbs)
Copper Oxide – CuO	Storage Silo	14,370 kg (31,680 lbs)
Ferric Oxide – Fe_2O_3	Storage Silo	43,109 kg (95,040 lbs)
Lithium Carbonate- Li_2CO_3	Storage Silo	113516 (250,260 lbs) for LAW 4,500 kg (9,921 lbs) for HLW
Fosterite – Mg_2SiO_4	Storage Silo	85,144 kg (187,710 lbs)
Silica – SiO_4	Storage Silo	397,320 kg (875,940 lbs) for LAW 21,000 kg (46,297 lbs) for HLW
Zinc Oxide – ZnO	Storage Silo	45,504 kg (100,320 lbs)
Zircon Sand – $ZrSiO_4$	Storage Silo	45,504 kg (100,320 lbs)
Dry Glass-Former Chemicals	Day Tanks; 3 for LAW, 1 for HLW	1-day supply

Table 4-2. Process Chemicals

Material	Location	Quantity
Alumina – Al_2O_3	3 Day Tanks (LAW)	1,437 kg (3,168 lbs)
Boric Acid – H_3BO_3	3 Day Tanks (LAW) 1 Day Tank (HLW)	5,690 kg (12,514 lbs) for LAW 350 kg (772 lbs) for HLW
Wollanstonite – $CaSiO_3$	3 Day Tanks (LAW)	958 kg (2,112 lbs)
Copper Oxide – CuO	3 Day Tanks (LAW)	479 kg (1,056 lbs)
Ferric Oxide – Fe_2O_3	3 Day Tanks (LAW)	1,437 kg (3,168 lbs)
Lithium Carbonate – Li_2CO_3	3 Day Tanks (LAW) 1 Day Tank (HLW)	3,789 kg (8,342 lbs) for LAW 150 kg (331 lbs) for HLW
Fosterite – Mg_2SiO_4	3 Day Tanks (LAW)	2,838 kg (6,257 lbs)
Silica – SiO_4	3 Day Tanks (LAW) 1 Day Tank (HLW)	13,244 kg (29,198 lbs) for LAW 700 kg (1,543 lbs) for HLW
Zinc Oxide – ZnO	3 Day Tanks (LAW)	1,517 kg (3,344 lbs)
Zircon Sand – $ZrSiO_4$	3 Day Tanks (LAW)	1,517 kg (3,344 lbs)
LAW Vitrification Offgas Treatment		
Ammonia	Pressurized Tank External to Facility	Maximum Storage Quantity – Day Tank
Alumina beads impregnated with metal oxide catalyst	Selective Catalytic Reduction (SCR) Bed	Capacity of SCR Bed – TBD
HLW Vitrification Offgas Treatment		
Silica gel impregnated with Ag NO_3; or silver exchanged zeolite	Iodine Adsorption Unit	Capacity of Iodine Adsorption Unit – TBD
Bulk Chemical Storage		
12.2M HNO_3	Bulk Storage Tank in Wet Chemical Storage Building	5,000 gallons (19,000 liters)
19M NaOH	Bulk Storage Tank in Wet Chemical Storage Building	15,000 gallons (57,000 liters)
$NaNO_2$ – Crystalline	Bulk Storage in Wet Chemical Storage Building	20,000 pounds (9,000 kg)
NH_3 – Liquid	Ammonia Storage Tank in Wet Chemical Storage Building	75,000 pounds (34,000 kg)
$Fe(NO_3)_3$ 6 H_2O – Crystalline	Bulk Storage in Wet Chemical Storage Building	20,000 pounds (9,000 kg)
$Sr(NO_3)_2$ _ Crystalline	Bulk Storage in Wet Chemical Storage Building	17,000 pounds (7,800 kg)

Table 4-3. Hazardous Characteristics of Process Chemicals and Potential By-Products

Process Chemicals & Potentially Hazardous By-Products	Hazard							
	Asphyxiant	Acute Toxic	Chronic Toxic	Corrosive	Flammable/ Explosive	Reactive	Skin Irritant	Oxidizer
NaOH Solutions	Yes	Corrosive irritant to eyes, mucous membrane, respiratory system, can cause permanent damage to eye tissue, blindness	No	Yes	No, but reacts with some metals to form hydrogen	Stable, but EPA haz waste number D003 (reactive)	Corrosive irritant to skin	No
3.5M $Fe(NO_3)_3$	No	Vapors irritating to eyes, contact may cause severe irritation or burns	Conjunctivitis, liver and pancreas damage; eye, respiratory, and gastrointestinal tract irritation; diarrhea, abdominal pain, nausea, vomiting, metallic taste, weak pulse, jaundice, anuria (from Material Safety Data Sheet [MSDS] for solid ferric nitrate)	EPA haz waste number D002 (corrosive)	MSDS shows EPA haz waste no. D001 (ignitable); but says not flammable	Stable, but storage code yellow (reactive)	Vapors irritating to skin, contact may cause severe irritation or burns	Yes
1.0M $Sr(NO_3)_2$	No	Contact with eyes may cause mild irritation	No	No	Not flammable, but closed containers exposed to heat may explode	Stable, but storage code yellow (reactive) and EPA code D003 (reactive)	Contact may cause irritation	Yes
SuperLigand SL644 Ion Exchange Resin	No date received from vendor. To be completed when data available							
Reilley Industries Reillex-HPQ	No	No inhalation toxicity data available. Contact may cause irritation to nasal and respiratory tract. Nuisance dust; may be irritating to eyes as an abrasive. Chronic effects not expected.		No	No	No	Dermal toxicity expected to be low.	No
HNO_3	No	Inhalation may cause nausea, vomiting, lightheadedness, headache, severe irritation of respiratory system, coughing, and chest pains	Damage to lungs, teeth	Yes	No (flammable by chemical reaction w/reducing agents)	Stable, but storage code yellow (reactive)	Contact with liquid or vapor may cause severe irritation or burns of the skin	Yes

Table 4-3. Hazardous Characteristics of Process Chemicals and Potential By-Products

Process Chemicals & Potentially Hazardous By-Products	Hazard							
	Asphyxiant	Acute Toxic	Chronic Toxic	Corrosive	Flammable/ Explosive	Reactive	Skin Irritant	Oxidizer
Crystalline silico-titanate (CST) Cs adsorption medium	No specific date found. See entries for silica.							
$NaNO_3$ (product formed during Cs recovery as solid)	No	Inhalation of dust may cause irritation. Inhalation may cause cyanosis. Effects may include headache, nausea, loss of consciousness, convulsions	No	No	Will ignite with heat, shock, or friction Explodes if >540 °C (1000 °F)		Yes. Prolonged exposure may cause dermatitis	Yes
Alumina	No	Dust inhalation may cause tightness and pain in chest, coughing, difficulty breathing.	Excessive inhalation of dust may be severely damaging to respiratory passages and lungs (Shaver's disease). Questionable carcinogen	No	No	No	Yes	No
Boric Acid	No	Dust inhalation may cause tightness and pain in chest, coughing, difficulty in breathing. Moderately toxic by skin contact and subcutaneous routes. Poison experiments indicate poison by inhalation and subcutaneous routes	Chronic effects of overexposure may include kidney and/or liver damage. Chronic exposure may result in borism (dry skin, eruptions, and gastrointestinal disturbances)	No	No	No	Yes. Prolonged exposure may cause dermatitis	No
Wollastonite ($CaSiO_3$)	No	Nuisance dust (calcium silicate)	Prolonged exposure to wollastonite dust may affect pulmonary function	No	No	No	Minor skin irritation from prolonged contact	No
Copper Oxide (CuO)	No	Inhalation of dust may cause irritation to upper respiratory tract		No	No	No	No. However labeling indicates "Avoid contact with skin"	No

Table 4-3. Hazardous Characteristics of Process Chemicals and Potential By-Products

Process Chemicals & Potentially Hazardous By-Products	Hazard							
	Asphyxiant	Acute Toxic	Chronic Toxic	Corrosive	Flammable/ Explosive	Reactive	Skin Irritant	Oxidizer
Ferric Oxide (Fe_2O_3)	No	Dust may irritate eyes. Inhalation of dust may cause irritation to upper respiratory tract; may cause metal fume fever	Benign pneumoconiosis, siderosis	No	No	No	No. However labeling indicates "Avoid contact with skin"	No
Lithium Carbonate (Li_2CO_3)	No	Contact with eyes may cause irritation	Chronic effects of overexposure may include kidney and/or liver damage	No	No	No	No. However, labeling indicates "Avoid contact with skin"	No
Fosterite (Mg_2SiO_4)	No	May be irritating to eyes and mucous membranes. May be harmful if inhaled	No	No	No	No	Yes	No
Silica (SiO_2) (sand)	No	Slight acute health hazard	Continued inhalation of dust (<10 micron) over a number of years without approved respiratory protection may cause silicosis. Carcinogenic (silica, crystalline-quartz)	No	No	No	No. However, labeling indicates "Avoid contact with skin".	No
Zinc oxide (ZnO)	No	Inhalation of vapors may cause severe irritation of the respiratory system. Overexposure to vapors may cause irritation of the mucous membranes, dryness of mouth and throat, headache, nausea, and dizziness	Inhalation may cause liver dysfunction, peptic ulcer, gastrointestinal tract damage	No	No	No	Yes	No

Table 4-3. Hazardous Characteristics of Process Chemicals and Potential By-Products

Process Chemicals & Potentially Hazardous By-Products	Hazard							
	Asphyxiant	Acute Toxic	Chronic Toxic	Corrosive	Flammable/ Explosive	Reactive	Skin Irritant	Oxidizer
Zircon sand ($ZrSiO_4$)	No	Acute rapidly developing silicosis may occur in a short period of time in heavy exposure. Silicosis is a form of disabling pulmonary fibrosis which can be progressive and may lead to death	Prolonged exposure to respirable crystalline silica may cause delayed lung injury. Silica quartz is carcinogenic	No	No	No	No, but protect skin	No
NOx gases formed by decomposition of melter feed slurry components	No	Yes. Poison gas. Severe eye, skin, and mucous membrane irritant. Systematic irritant by inhalation. Higher concentrations (60 to 150 ppm) cause immediate irritation.	Continued exposure to low concentrations is said to result in chronic irritation of the respiratory tract with cough, headache, loss of appetite, dyspepsia, corrosion of teeth, and gradual loss of strength	Will react with water or steam to produce heat and corrosive fumes	Liquid is a sensitive explosive	No	Severe skin irritant	Yes
High Efficiency Mist Eliminator -fine glass fibers	No	Questionable carcinogen with experimental data by inhalation and other routes. Possibility of lung problems resulting from inhalation of fine particles or flakes or fibers of fiberglass. No consistent evidence of chronic health effects in workers exposed to manmade vitreous fibers.		No	No	No	Sometimes causes irritation to skin (mechanical irritation)	No
Ammonia, NH_3 (Gas at l atm and standard temperature)	Yes	Severe. Corrosive and irritating to skin, eyes, upper respiratory system and all mucosal tissue. May cause burning, coughing, wheezing, shortness of breath, headache, nausea, eventual collapse.	No	Yes. Corrosive to skin, eyes, upper respiratory system	Lower explosive limit 15%, upper explosive limit 27%, but minimum ignition energy for ammonia is very high.	No	Corrosive and irritant to skin. High concentration contact will cause caustic-like dermal burns; lower concentration contact will cause dermatitis	No

Table 4-3. Hazardous Characteristics of Process Chemicals and Potential By-Products

Process Chemicals & Potentially Hazardous By-Products	Hazard							
	Asphyxiant	Acute Toxic	Chronic Toxic	Corrosive	Flammable/ Explosive	Reactive	Skin Irritant	Oxidizer
Alumina beads impregnated with metal oxide catalyst (Selective Catalytic Reduction [SCR] bed)	No specific data found. See entries for alumina.							
$NaNO_2$	No	Harmful if inhaled or swallowed. Exposure to high dust concentration may cause persistent headache, dizziness, nausea, vomiting, cyanosis, coma, convulsions, death. Vasodilator and methemoglobin former.		No	Will ignite by friction in contact with organic matter. Explodes when heated to over 540 °C (1000 °F) or when melted with ammonium salts.	Stable below 320 °C (800 °F). Reactive with acid.	May cause irritation	Yes
Potential for formation of ammonium nitrate (vitrification offgas treatment)	No	Dust inhalation may cause tightness and pain in chest, coughing, and difficulty breathing	No	No	EPA haz waste code D001 (ignitable). Avoid heat, shock, flame	Avoid heat, shock, flame. Decomposes at boiling point (210 °C [410 °F]). Storage code yellow (reactive).	Contact with skin or eyes may cause irritation	Yes
Potential for formation of ammonium bisulfate (vitrification offgas treatment)	No	May be harmful if inhaled. Contact may cause burns to eyes.		Yes	No	No	Contact may cause burns to skin	No
Iodine adsorption unit -silver nitrate impregnated silica gel or silver exchanged zeolite	No	SILVER NITRATE: May be harmful if inhaled. Severe eye irritant. Poison by unspecified route. SILICA GEL: Dust may irritate or burn mucous membranes (nuisance dust)	SILICA GEL: questionable carcinogen	No	SILVER NITRATE: EPA Waste Code D001 (ignitable)	No	SILVER NITRATE: Skin irritant. SILICA GEL: Prolonged contact may cause skin irritation.	SILVER NITRATE: Yes

4.2 Chemical Interactions

In addition to the inherent hazardous characteristics of the process chemicals and byproducts, a full assessment of the hazard they represent requires a survey of the potential interactions between them should they come into contact with each other. The American Institute of chemical Engineers (AIChE) guidelines (AIChE 1992) suggest beginning this assessment in the form of a simple matrix that lists each chemical compound against all others with a simple indication of whether a potentially hazardous interaction exists.

Table 4-4 represents the interaction matrix that resulted from research of the potential chemical interactions of the TWRS-P Facility process chemicals and byproducts. The information for this table came from a survey of the MSDS, and publications such as the *Fire Protection Guide on Hazardous Materials, Sixth Edition* (NFPA 1975), *Bretherick's Handbook of Reactive Chemical Hazards*, (Bretherick 1990), and *Sax's Dangerous Properties of Industrial Materials, Eighth Edition* (Lewis 1992).

4.3 Energy Sources

Inherent in radioactive waste treatment processes are sources of energy, such as chemical energy, pressure, electrical energy, and heat. The energy sources present in the TWRS-P Facility are assessed for their potential to cause harm directly, if released, or to initiate or exacerbate releases of hazardous materials. The guidewords used in the hazard evaluation studies for the TWRS-P Facility described in Chapter 5.0, "Hazard Evaluation by Process Step", encompass the energy sources identified in the facility. Quantification of the energy that could potentially be released from the source is a necessary step to determine the magnitude of the hazard and to design the appropriate controls.

Many of the energy sources considered are common to industrial facilities in type and the magnitude of the hazard posed to workers, the public, and the environment. Safe usage and work requirements for these energy sources are governed by codes and standards recognized as adequate by the DOE and other regulatory agencies, such as the Occupational Safety and Health Administration (OSHA).

For the purpose of the assessment at this stage of design, the focus is on the major energy sources and those that may be unique to particular steps of the process. Systems that are common throughout the facility, and do not present a particularly high hazard are discussed in general in the following paragraphs. Greater detail on these systems will be available in Part B.

Transfer pumps and transfer lines for moving liquid and slurry solutions between process steps are not specified in detail by process. The pumps may be sources of rotational kinetic energy, friction heat, and pressure. Transfer lines are under varying degrees of pressure and some are elevated, so that liquid releases from them could be transported more readily by airborne pathways from the facility.

Various tanks and vessels for storage or holding of the waste materials and process chemicals at atmospheric pressure are located throughout the process. Some of these tanks are elevated, so that material releases from them would be transported more readily by airborne pathways.

Table 4-4. Matrix of Potential Interaction of Facility Process Chemicals

Chemicals & Potentially Hazardous Products	NaOH	3.5M Fe $(NO_3)_3$	1.0M Sr $(NO_3)_2$	SL644 Resin	Reillex-HPQ	HNO_3	CST Cs Media	Na NO_3	Alumina	Boric Acid	Wollastonite	Copper Oxide	Ferric Oxide	Lithium Carbonate	Fosterite	Silica	Zinc Oxide	Zircon Sand	NOx gases	Fine Glass Fibers	Ammonia	Al Beads w/SCR	Ammonium Nitrate	Ammon. Bisulfate	Iodine Abs. Unit	$NaNO_2$
NaOH						x				x														x[g]	x	
3.5M $Fe(NO_3)_3$					x[a]																x[e]			x		
1.0M $Sr(NO_3)_2$					x[a]																x[e]			x		
SuperLigand SL644 Ion Exchange Resin						x[c]															x[d]					
Reilley Industries Reillex-HPQ						x[a]		x[a]											x[a]		x[d]		x[a]		x[a]	
HNO_3														x			x				x		x	x		x
Crystalline silico-titanate (CST) Cs adsorption medium																										
$NaNO_3$ (product formed during Cs recovery as solid)									x[b]												x[e]			x		
Alumina																										
Boric Acid																										x
Wollanstonite ($CaSiO_3$)																										
Copper Oxide (CuO)																										
Ferric Oxide (Fe_2O_3)																										
Lithium Carbonate (Li_2CO_3)																									x	
Fosterite (Mg_2SiO_4)																										
Silica (SiO_2) (crystalline/sand)																										
Zinc oxide (ZnO)																										
Zircon sand ($ZrSiO_4$)																										
NO_x gases formed by decomp. of melter feed slurry components																					x[e]			x		

Table 4-4. Matrix of Potential Interaction of Facility Process Chemicals

Chemicals & Potentially Hazardous Products	NaOH	3.5M Fe $(NO_3)_3$	1.0M Sr $(NO_3)_2$	SL644 Resin	Reillex-HPQ	HNO_3	CST Cs Media	Na NO_3	Alumina	Boric Acid	Wollastonite	Copper Oxide	Ferric Oxide	Lithium Carbonate	Fosterite	Silica	Zinc Oxide	Zircon Sand	NOx gases	Fine Glass Fibers	Ammonia	Al Beads w/SCR	Ammonium Nitrate	Ammon. Bisulfate	Iodine Abs. Unit	$NaNO_2$
High Efficiency Mist Eliminator -fine glass fibers																										
Ammonia, NH_3																							x[f]		x[h]	
Alumina beads impregnated with metal oxide catalyst (SCR bed)																										
Potential for formation of ammonium nitrate (vitrification offgas treatment)																										x
Potential for formation of ammonium bisulfate (vitrification offgas treatment)																									x[h]	
Iodine adsorption unit -silver nitrate impregnated silica gel or silver exchanged zeolite.																										
$NaNO_2$																										

[a] Reillex ion exchange medium is relatively stable in the presence of most oxidizing agents, but caution should be exercised if product is combined with strong oxidizing agents, including nitric acid.

[b] Mixtures of sodium "...nitrate with powdered aluminum or its oxide (the latter seems unlikely) were reported to be explosive." (Bretherick 1990, p. 1337).

[c] Weak-base resins should not be treated with nitric acid. Storage of nitric acid-containing organic resins may lead to ignition (Bretherick 1990, p. 1167).

[d] Passage of a concentrated solution of ammonia through a column of the acid form of a cation exchange resin led to a sudden neutralization exotherm which damaged the bed, owing to its poor heat dissipation characteristics (Bretherick 1990, p. 1642).

[e] Flammability and explosion susceptibility of ammonia are discussed for various oxidants. These specific oxidizers are not mentioned, but they could increase susceptibility as well (Bretherick 1990, p. 1232).

[f] Depending on the conditions, presence of free ammonia in ammonium nitrate may either stabilize or tend to destabilize the salt (Bretherick 1990, p. 1248).

[g] Contact with caustic liberates ammonia (see Fisher Scientific Company Material Safety Data Sheet for Ammonium Bisulfate).

[h] Ammonia is capable of reacting with some heavy metal compounds (e.g., silver nitrate) to produce materials which may explode violently when dry (Bretherick 1990, p. 1231).

Locations where movement of objects may occur, either by lifting or by motorized rolling transport, are not specifically detailed by process step. Dropped objects or vehicle collisions could damage process components or storage tanks and initiate a release of hazardous material and energy. Vehicle fuel may also present a fire hazard.

The following summary focuses on the waste pretreatment and immobilization processes and the handling of waste products. A survey of the hazards of facility service and support systems is left for a further update of the hazard analysis when the design details will be more complete. Facility service and support systems that could be sources of hazards include the following:

1) Ventilation system fans, ductwork, and filtration systems
2) Demineralized and raw water systems
3) Process and instrument air systems
4) Sampling systems and laboratories
5) Maintenance activities

Table 4-5 summarizes the major energy sources by process step, including a quantification of the energy as is planned at this stage of design.

4.4 Comparison to Similar Facilities

The AIChE Guidelines (1992) suggest examining records from similar facilities to provide an additional resource and check on the completeness of the hazard identification. Other waste vitrification facilities identified were the Sellafield Vitrification Plants, the Savannah River DWPF, and the WVDP.

4.4.1 Comparison to Hazard Analysis Results from Other Facilities

The hazard analyses from the DWPF (WSRC 1994) and the WVDP (WVNS 1995) were studied to determine whether additional hazards were considered for those facilities that might apply to the TWRS-P Facility.

For the DWPF, all hazards involving the melter were examined for comparison, and only the high/moderate risk hazards were examined for the rest of the facility. A significant number of the high/moderate risk hazards involved volatile organic compounds, notably benzene. The TWRS-P Facility waste streams do not contain significant concentrations of volatile organics, nor are there any plans for the use or storage of organic compounds in the facility.

Hydrogen explosions were postulated in various areas of the DWPF. The source of the hydrogen was radiolytic decomposition of water, as well as planned and inadvertent chemical reactions, of which hydrogen gas is the product. In the TWRS-P Facility process, radiolytic hydrogen is produced from the water content of the radioactive waste streams. Hydrogen gas is not a product of any of the planned chemical reactions in the process. The inadvertent mixing of process chemicals would not produce hydrogen.

Table 4-5. Energy Sources by Process Step

Energy Source	Energy Type	Quantity
Entrained Solids Removal and Strontium/Transuranic Solids Removal for Envelope C		
Recirculation Pump P1101A/B	Rotational kinetic Electrical Friction heat Pressure	Pump Specifications to be determined (TBD)
Recirculation Loop	Pressurized liquid lines	TBD (Maximum pressure)
Crossflow filtration loop	Pressurized liquid lines	TBD (Maximum pressure)
Low-activity Waste (LAW) Feed Evaporator		
LAW Feed Evaporator	Pressure Temperature	Operated under vacuum
Recirculation Pump	Pressure	High hydrostatic head to maintain high flow rate through the heat exchanger
Heat Exchanger	Heat Pressure	High flow rate Supplied by steam
Product Pump	Rotational kinetic Electrical Friction heat Pressure	Pump specifications TBD
Product Transfer Pumps	Rotational kinetic Electrical Friction heat Pressure	Pump specifications TBD
Steam ejectors	Heat Pressure	TBD
Cesium and Technetium Removal Using Ion Exchange		
Transfer pumps for regeneration caustic, caustic rinse, used caustic rinse, and nitric acid column elution	Rotational kinetic Electrical Friction heat Pressure	Pump specifications TBD
Transfer lines for nitric acid and caustic	Pressure	TBD
Ion Exchange Columns	Pressure	Under pressure during rinse, elution and regeneration
Cesium and Technetium Nitric Acid Recovery		
Acid Recovery Evaporator - • Steam to Jacket • Reduced pressure operation	Heat Pressure Pressure Differential	TBD TBD TBD
Steam Ejectors	Heat Pressure	TBD

Table 4-5. Energy Sources by Process Step

Energy Source	Energy Type	Quantity
Cesium Recovery as a Solid		
V2401 – Cesium Concentrate Neutralization	Heat of Reaction Temperature	5.4 kW over 12-hour caustic addition Setpoint at 50 °C (122 °F)
Cesium Product Canisters	Radiolytic heat	0.8 kW per canister; 7 canisters for Envelopes A and C, 35 canisters for Envelope B
Welding of Cesium Product Canister Closures	Heat High temperature Pressure	Pressurized bottles for welding gases
Cesium and Technetium Ion Exchange Resin Recovery		
Resin Flush Transfer Pump – P2901	Rotational kinetic Electrical Friction heat Pressure	Pump specifications TBD
Ion Exchange Columns	Pressure	Under pressure during resin fluidization and discharge TBD psig
Hydrocyclone	Rotational kinetic	TBD
Pulsed Jet Mixer	Pressure	TBD
LAW Melter Feed Evaporator		
Reboiler – E3101	Heat Pressure	Low pressure saturated steam
Evaporator	Pressure differential	Operated at lower than atmospheric pressure
Recirculation Pump	Rotational kinetic Electrical Friction heat Pressure	High velocity pump Pump specifications TBD
Agitation in Product Buffer Vessels		
Vacuum eduction system		
LAW and High-level Waste (HLW) Melters		
Screw Conveyers for Delivery of Dry Glass Formers	Rotational kinetic	TBD
Compressed Air for Blending Dry Glass Formers	Pressure	TBD
Blending Transporter Vessel	Pressure	Pressurized with compressed air to discharge dry glass formers – TBD
Melter Feed Preparation Vessel Mixer	Rotational kinetic	TBD

Table 4-5. Energy Sources by Process Step

Energy Source	Energy Type	Quantity
Pumps to deliver feed from the melter feed preparation vessels to the Melters	Rotational kinetic Electrical Friction heat Pressure	Pump specifications TBD
Melters: • Melter Vessel • Melter Electrodes • Melter Discharge – Gas lift or Vacuum Assistance • Offgas Film Cooling – Compressed Air • HLW Quench Recycle Pump	 Heat Electrical Pressure Pressure High velocity liquid spray Pressure	 Glass pool temperature 1150 °C (2102 °F) Plenum Temperature 400–600 °C (752-1112 °F) during feeding; 1050 °C (1922 °F) during idling 3.0 MW for LAW Melters; 1.0 MW for HLW Melter
Immobilized Low-activity Waste (ILAW)/LAW Container Welding	Heat Pressure	Pressurized Welding Gases
Offgas Treatment Systems		
High-Efficiency Mist Eliminator (HEME) – High-Pressure Water for Backwash	Pressure	TBD
Selective Catalytic Reduction (SCR) unit • Heat Exchangers (one gas fired)for Preheating of Gases • Exothermic Reaction of Ammonia and NO_x	Heat High Temperature Gases Chemical Heat	 250-350 °C (482-662 °F) TBD
ILAW/Immobilized High-level Waste (IHLW) Container Decontamination		
Ultrahigh pressure intensifier pump	Ultrahigh pressure water	2500 – 4000 bar (250-400 MPa) located in pretreatment cell
ILAW/IHLW Containers	Hot surfaces	Up to 4 containers per day in shielded store or remote cells
Outcell Process Chemicals		
Ammonia Tank	High pressure	75,000 pounds (34,000 kg)

The potential for accumulation of flammable mixtures of hydrogen and air was considered in various areas of the TWRS-P Facility. Based on Tank Waste Remediation System (TWRS) experience and analysis performed for the TWRS Tank Farms (Hu 1997), the radiolytic production rate of hydrogen in the waste streams is low and can readily be quantified. Controls (i.e., monitoring and adequate ventilation) to maintain hydrogen/air mixtures well below the lower flammability limit, will be implemented where the potential for hydrogen accumulation can exist.

The most significant hazardous condition identified for the DWPF glass melter was a steam explosion resulting from injection of water into the melter when the molten glass viscosity is substantially lower than normal because salt concentrations in the melt are significantly out of specification. An explosion/overpressure hazard in the TWRS-P melters was addressed in the hazard evaluation study, but the specific initiator was not specified. Investigation of the potential for decreased viscosity of the molten glass such that a steam explosion is possible should be added to the open concerns for this study.

Table 4-6 provides a tabulation of the results of comparison of the DWPF hazard analysis with the TWRS-P Facility hazard evaluation.

A similar comparison to the hazard analysis for the WVDP Vitrification Building yielded the results given in Table 4-7.

Examination of the hazard analysis for the remainder of the WVDP plant did not reveal any hazards or events that were pertinent to the TWRS-P Facility process and that were not considered in the hazard evaluation studies.

Table 4-6. Comparison of TWRS-P Facility Hazard Evaluation Results to DWPF Hazard Analysis

DWPF Hazard Analysis		TWRS-P Facility Hazard Evaluation	
Identifier/Keyword	**Discussion**	**Identifier[a]/Guideword**	**Discussion**
Glass Melter			
Explosive/Pyrophoric – Volatile hydrocarbons, hydrogen and carbon monoxide in the melter.	Postulated explosion and breach of melter vessel	3200/167 Low-activity Waste (LAW) 3200/249 High-level Waste (HLW) Explosion/Overpressure Hazard 3200/192 – Melter offgas System Fire Hazard	No volatile hydrocarbons or explosive gases other than hydrogen are expected in the melters. Hydrogen evolution expected to be too low for significant accumulation, offgas system adequate for dilution Melter offgas is a potential source of hydrogen and carbon monoxide evolution
Pressure/Volume – Water interactions with molten salt gall	Postulated steam explosion, pressurization of melter vessel, breach of vessel	3200/167 LAW Melter 3200/249 HLW Melter Explosion/Overpressure Hazard	Potential for significantly reduced viscosity of molten glass should be investigated

Table 4-6. Comparison of TWRS-P Facility Hazard Evaluation Results to DWPF Hazard Analysis

DWPF Hazard Analysis		TWRS-P Facility Hazard Evaluation	
Identifier/Keyword	**Discussion**	**Identifier[a]/Guideword**	**Discussion**
Hot Equipment/Thermal Radiation – Melter Vessel Electrodes	Postulated explosion, overpressure, vessel breach	3200/167 (LAW) 3200/249 (HLW) Explosion/Overpressure Hazard 3200/175 Loss of Water Hazard	
High/Moderate Risk Events for Remainder of Plant			
Explosives/Pyrophorics – volatile organics, hydrogen	The main concern for DWPF is volatile organic vapors. TWRS-P does not have these compounds	Radiolytic hydrogen addressed for all systems under guidewords "Explosion/Overpressure Hazard", "Ventilation Hazard and/or Fire Hazard"	Ammonia explosion potential is also addressed
Explosives/Pyrophorics – Ammonium Nitrate	Precipitation in ductwork, on filters, and elsewhere in systems	Action item # 0/1/10 1614672/239 – Explosion Overpressure Hazard for LAW/HLW Vitrification Offgas Treatment System	Potential for ammonium nitrate formation in double-shell tank and ventilation system was addressed Ammonium nitrate formation from ammonia and NO_x was addressed
Mass, Gravity, Height – Crane Drops	Mechanical confinement breach	Guidewords "Dropped Load/Impact Hazard"	Addressed for all systems where lifts are possible
Rotational Kinetic energy – Agitators and pumps	Mechanical confinement Breach	Guideword "Loss of Containment Hazard"	No breach of confinement as a result of the operation of rotating equipment was postulated
Corrosives – Nitric Acid	Chemical Confinement Breach	Guideword "Loss of Containment Hazard" and "Corrosion/Erosion Hazard"	Addressed for all systems where potential exists Presence of halogens and corrosive offgas products is also addressed
Chemical Interactions	Chemical Confinement Breach from heat, gases, overpressure or overfill	Guidewords "Loss of Containment Hazard", "Ventilation Hazard", "Explosion/Overpressure Hazard"	Addressed where acid/caustic mixing can occur, or acid/water mixing; e. g., Cs and Tc Ion Exchange, Nitric Acid Recovery, Outcell Process Reagents

a Identifiers correspond to identification numbers on the hazard evaluation fault schedules in Section 5.2 of this report.

Table 4-7. Comparison of TWRS-P Hazard Evaluation Results to the WVDP Hazard Analysis

WVDP Hazard Analysis		TWRS-P Hazard Evaluation	
Hazard	**Discussion**	**Identifier[a]/Guideword**	**Discussion**
Glass Melter			
Loss of high-level waste (HLW) from Melter	Melter breach, leakage of molten glass to cell floor	3200/164 – Glass Melter Loss of Containment Hazard	Cell is secondary confinement
Escape of Melter Offgas to Cell	Offgas jumper failure	3200/190 – Melter Offgas System Loss of Containment Hazard 3200/191 – Melter Offgas System Ventilation Hazard	Melter is depressed with respect to the cell
In-Cell Fire	Electrical source and mineral oil in shielding windows mentioned as causes Combustible inventory will be kept low	3200/166 – Glass Melter System Fire Hazard	Indeterminate at this time whether cell shielding windows will contain mineral oil. Combustible inventory will be kept low

a Identifiers correspond to identification numbers on the hazard evaluation fault schedules in Section 5.2 of this report.

The results of the Hanford TWRS Hazard Analysis (WHC 1997) were considered in the TWRS-P Facility hazard evaluation to evaluate the characteristics and potential hazards of storage and transfer of the waste feeds. Assessment of potential for radiolytic hydrogen production and precipitation of ammonium nitrate from the waste used analyses originally developed for the Tank Farm waste (Hu 1997).

4.4.2 Operating Histories of Other Facilities

Insight into the potential hazards of the TWRS-P Facility can be gained by examining the operating records of other vitrification facilities. The DOE Occurrence Reporting Database was queried for events reported by two operating DOE vitrification facilities, the DWPF at the Savannah River Site, and the WVDP in West Valley, NY. Both facilities stabilize radioactive liquid waste into glass forms. For similar BNFL Sellafield facilities (Windscale Vitrification Plant (WVP), Enhanced Actinide Removal Plant (EARP), the Radiological Incident Report database was examined.

Table 4-8 summarizes the reported events from the occurrence reporting records for DWPF and WVDP facilities, and provides an indication of how the potential hazard is addressed for the TWRS-P facility.

Table 4-8. Off-Normal Events at Waste Vitrification Facilities.

Event	Facility	System	Cause	How Addressed for TWRS-P
Liquid Spill – Release of potentially hazardous offgas condensate to occupied area during filter changeout	WVDP	Melter Offgas System	System in abnormal configuration (offgas heaters secured and floor drains blocked) for startup testing	3200/191; Melter Offgas System; Ventilation Hazard Guideword 3200/187; Melter Offgas System; External Dose Guideword
Crane Drop – Drop of melter turntable tophat onto turntable resulting from improper positioning of grapple	WVDP	Melter	Poor design: 1. Grapple clearances too tight 2. Position of operators such that they could not either clearly see the grapple position indicator or visually verify grapple position 3. Grapple position indicator not designed to show positive indication of grapple engagement	All systems; Dropped Load/Impact Hazard Guideword
Hazardous Gas Accumulation – Two occurrences where NO_x blower fail to restart following loss of site power	WVDP	Melter Feed System	Control logic failure – control logic interpreted blower was operating when it was not	1614672/218; Low-activity waste (LAW) Vitrification Offgas Treatment System; Loss of Power Hazard Guideword
Loss of Shielding – Inadvertent backup of radioactive liquid to a pipe outside a shielded cell	WVDP	Sample Lines	Failure of three-way valve	All systems, External Radiation Hazard Guideword
Loss of Confinement-leakage of gases from melter vapor space to occupied areas through electrical penetrations	WVDP	Melter and Melter Cell	Pressure transients in melter from air introduction during certain operational procedures; not recognized in the design	3200/164 and 3200/246; Melter; Loss of Confinement Hazard Guideword 3200/249; Melter; Explosion/Overpressure Hazard Guideword
Fire Hazard and Worker Injury Potential-Transient voltage surge suppressor damage on energization after power outage	DWPF	Electrical Systems	Investigation not complete at time of report	All systems; Fire Hazard Guideword

Table 4-8. Off-Normal Events at Waste Vitrification Facilities.

Event	Facility	System	Cause	How Addressed for TWRS-P
Lightning Hazard, Fire Hazard – catastrophic breaker failure resulting in loss of power to various operating equipment, fire in a cable tray and shutdown of process	DWPF	Electrical Systems	Weather	All systems; Extreme Weather Hazard Guideword, Fire Hazard Guideword
Potential loss of confinement – Inadvertent glass pour	DWPF	Melter	Operator error, poor control room design – operator inadvertently shut down the backup offgas exhauster while the primary offgas exhauster was shut down	3200/164 and 3200/246; Melter, Loss of Confinement Hazard Guideword
Failure of Shield Door Interlock	WVP	Product Handling	Incorrect re-enabling of software control allowed failure of interlock between container handling and shield door position	Various systems; External dose guideword notes need for shielding requirements
Ultrafilter Blockage	EARP	Floc Treatment	Poor flowthrough Characteristics of the Pu/Fe floc	1/0; Entrained Solids Removal System; External Dose Guideword

5.0 Hazard Evaluation by Process Step

Hazard evaluation studies by process step were performed, using the methodology described in Chapter 3.0, "Hazard Analysis Methodology". Chapter 5.0 provides a description of each process module studied by a hazard evaluation team and presents the fault schedule that was developed.

The reading and understanding of this section is enhanced by reference to the low-activity Waste (LAW)-only option flowchart and the LAW/High-Level Waste (HLW) option flowchart, Figures 2-1 and 2-2, respectively. A comparison of the LAW-only option flowchart and the LAW/HLW option flowchart shows that the LAW/HLW option includes the LAW option. The process descriptions begin with the core LAW process and are expanded to describe the changes required by the HLW option rather then discussing the two options separately and repeating much that the two options have in common.

The fault schedule is the device the hazard evaluation teams used to record their findings. The first column of the fault schedules contains an identifier number that was uniquely assigned to the event being considered. The fault schedules and accompanying action items are entered in a controlled electronic database that is the hazard evaluation record. The identifier numbers provide a means to tie action items to the events considered. A ranking of the hazards by consequence for each step is provided, followed by a discussion of design features or administrative controls, by function, required to prevent or mitigate the consequence of hazardous conditions.

5.1 Scope of Hazard Evaluation Studies

Hazard evaluation pre-meetings of key process and safety organization personnel were held for the primary purpose of identifying the different processing modes and designating these as hazard evaluation study areas. In the initial pre-meeting, after a brief overview of the What-If/Checklist Analysis (WI/CL), the hazard evaluation meetings were scheduled, the checklist was discussed, and areas of study were defined for:

- Law Feed Receipt
- Law Feed Receipt Evaporator
- Entrained Solids Removal Systems
- HLW Feed Receipt and Pre-Treatment
- Cesium Removal Using Ion Exchange
- Cesium Recovery as a Solid
- Technetium Removal Using Ion Exchange
- Cesium and Technetium Nitric Acid Recovery
- Cesium and Technetium Fresh Resin Addition
- Plant Waste Management Law Container Decontamination
- Law Melter Feed Evaporator
- LAW Melter System
- LAW Vitrification Offgas Treatment and Emergency Offgas Systems
- HLW Vitrification – Glass Melter and Feed System
- HLW Vitrification Offgas Treatment

- LAW/HLW Secondary Offgas Treatment System
- LAW/HLW Container Decontamination System
- Plant Waste Management System
- Process Reagents
- Boiler Water Heat Recovery
- Mechanical Handling Systems
- Heating, Ventilation, and Air Conditioning Systems

It was agreed in the meeting to add "environment" to the checklist after comments from the cesium hazard and operability (HAZOP) analysis. It was also agreed the operability of the plant would be an explicit consideration.

In the ion exchange processes for removal of cesium and technetium from the waste, the cesium and technetium on the ion exchange resin is eluted with nitric acid. Both the cesium and technetium nitric acid eluate are fed to evaporators that increase the product concentration of cesium and technetium. Because of the similarities, the safety and process participants in this pre-meeting decided to use the completed hazard evaluation study records on the cesium removal as a reference for review of the technetium process by comparison.

Cesium and technetium storage were presented at a pre-meeting, but it was concluded that the incorporation of cesium storage Process Flow Diagram (PFD) information on the HLW melter PFD and the incorporation of the technetium storage on the PFD O/PR/2700 (now O/BE/1614667), eliminated the need to consider a separate PFD on storage. It was verified by review that PFD O/PR/2700 includes technetium storage.

The following utilities were not the subject of separate hazard evaluation studies because the auxiliary operations were considered in the review of each process system:

Chilled water
High-pressure steam
Instrument air
Demineralized water
Low-pressure steam
10 bar_g process air
Process water
Process air
Vessel vent system

Loss of services and the domino effect of this loss is a checklist item.

Information provided to the teams included the PFD and a key of PFD symbols. Plans of the process facility and simplified mass balance were under development but were available as a resource to the hazard evaluation teams.

Biographical sketches for all study team members are found in Appendix E. Unless otherwise noted, all hazard evaluation study participants have participated in similar BNFL reviews, and thus no training was required.

5.2 Process Steps

The following sections report the results of the hazard evaluation studies. A description of the process information available to the study team is provided, followed by listings of the study areas and study team members. The fault schedules resulting from the team's evaluation, the required controls, and items for further study are identified.

5.2.1 LAW Feed Receipt

The U.S. Department of Energy (DOE) delivers waste liquors for waste Envelopes A, B, and C into an existing double-shell tank ([DST] either AP-106 or AP-108) which is used as a buffer tank. The quantities delivered into the buffer tank are controlled by the operator, but are subject to the DOE-defined minimum batch transfer quantities. The designated tank and the exhaust system consisting of the exhaust blower, a prefilter, and two high-efficiency particulate air (HEPA) filters, in series, connected to a stack with stack monitors, were included in the hazard evaluation study.

BNFL is to be responsible for designing the components to transfer waste from the buffer tank to the plant receipt tanks, vessels V2101/V2102. The design of the primary and spare transfer line is to prevent leaks to ground by a pipe-in-pipe configuration. A leak in the inner primary line drains from the annulus between the primary and secondary line to a receipt tank. The receipt tanks also serve as the feed tanks to LAW feed evaporator. The daily average batch size of feed received in plant receipt tanks is 50.3 m^3 (13,290 gal) for Envelopes A and C. The capacity of the feed receipt tanks is 227 m^3 each. Feed batches could be as large as 200 m^3. The receipt tanks are then sampled to establish the waste feed content, primarily for solids content and sodium content. The analysis of this sample is not required prior to processing. Capabilities for line flushing (after each batch) and transfer line leak detection is also provided.

5.2.1.1 LAW Feed Receipt Study Areas and Hazard Evaluation Team

The hazard evaluation meeting was held in the BNFL offices in Richland, Washington. Process Flow Diagrams, PFD DW-200-100 (See Appendix C), were used in the review of the following study areas:

1) Filling of the DST from DOE-designated tank
2) Transfer route from DST to the facility
3) DST vessel
4) Concentrated solids return line from the Tank Waste Remediation System-Privatization (TWRS-P) to the DST pump pit

The hazard evaluation team members and respective disciplines are listed as follows:

R. Cullen – Team Leader
D. Skeath – Process
L. Solis – Ventilation
C. Nickolaus – Control and Instrumentation
D. Simpson – Observer and Interface Issues
K. Boomer – Process
M. Johnson – Process
M. Beary – Licensing and Regulatory

The biographical sketches of the experience and education of all hazard evaluation team members are on file.

Fault Schedule: LAW Feed Receipt

(Sheet 1)

Study Area/Keyword: DST Vessel - Corrosion / Erosion Hazard

Event Identifier	Initiating Event	Safeguards	Frequency	Hazard Consequence	Worker Consequence	Public Consequence
0/70	1. Our ownership of the DST is allowed to be extended for a long (years) time period.	1. Can use visible assessments of integrity.	3	1. Need to determine integrity/mantainability.	1	1

Study Area/Keyword: DST Vessel - External Dose Hazard

Event Identifier	Initiating Event	Safeguards	Frequency	Hazard Consequence	Worker Consequence	Public Consequence
0/55	1. Extended shutdown. 2. Overfilling of DST. 3. Leak of tank to annulus. 4. Tank failure due to rupture.	1. Leak detection of liquor in the annulus. 2. Secondary vent system. 3. Cannot empty tank below 6" - the 6" heel will prevent uplifting of tank base by vent. pulling a vacuum.	3	1. Additional maintenace activities required. 2. Misrouting of feed liquors. 3. Loss of liquor to annulus. 4. Vent. system pulls up bottom of tank - distortion.	2	1

Study Area/Keyword: DST Vessel - Internal Dose Hazard

Event Identifier	Initiating Event	Safeguards	Frequency	Hazard Consequence	Worker Consequence	Public Consequence
0/56	1. Mixing of incompatable feeds in the tank.	1. All envelopes are compatable (Caustic material). No other feeds identififed. 2. Feed specificaiton must be specified and demonstrated to be acceptable before feed is accepted.	3	1. Pressure causing activity release.	2	2

Fault Schedule: LAW Feed Receipt

(Sheet 2)

Study Area/Keyword: Filling DST - Corrosion / Erosion Hazard

Event Identifier	Initiating Event	Safeguards	Frequency	Hazard Consequence	Worker Consequence	Public Consequence
0/23	1. Operation of mixer pump. 2. Electrical effects enhancing corrosion rates. 3. Material out of spec (with respect to chemical conditions, temperature.)	1. Protection of instrumentation in the tank to be provided. 2. Administrative control on transfer of material. 3. Sampling results. 4. Corrosion monitoring. 5. Transfer lines/ventilation lines are buried below ground.	3	1. High velocity solids scouring tank walls/instrumentation. 2. Corrosion effects from interacting pipework.	1	1

Study Area/Keyword: Filling DST - Criticality Hazard

Event Identifier	Initiating Event	Safeguards	Frequency	Hazard Consequence	Worker Consequence	Public Consequence
0/6	1. Fissile material accumulation (acute/chronic), precipitation.	1. Sample results available (with independent check on the analysis) before material accepted by us into the DST.1. Criticality report (A. Jenkins, NRS) has indicated that there is no potential for such an incident in TWRS-P waste feeds.	1	1. Not considered credible.	1	1

Fault Schedule: LAW Feed Receipt

(Sheet 3)

Study Area/Keyword: Filling DST - Domino (Effects on Surrounding Plant) Hazard

Event Identifier	Initiating Event	Safeguards	Frequency	Hazard Consequence	Worker Consequence	Public Consequence
0/24	1. Valve misrouting (3 valves need to be reset). 2. Abnormal aerial release from failed HEPA filters. 3. Leak to ground undermining the ground - stress to pipework. See corrosion/erosion.	1. Communicaiton between DOE/DST operators. 2. Valve alignment status indicated. 3. Interlocks between DOE/DST vessels. 4. Redundant HEPA filters, stack monitoring. 5. Coaxial pipework, leak detection in annulus.	3	1. Downstream effects e.g. DST inlet line closed during transfer from DOE tank	1	1

Study Area/Keyword: Filling DST - Dropped Load / Impact Hazard

Event Identifier	Initiating Event	Safeguards	Frequency	Hazard Consequence	Worker Consequence	Public Consequence
0/27	1. Dropped mixer pump for example. 2. External hazard impact event (road crash).	1. Provision will be provided to reduce dropped load potential during the lifting/handling heavy loads. 2. Equipment integrety; administrative procedures. 3. Use of physical barriers on vehicle movement may be appropriate. 4. Administrative controls on vehicle movements within tank farm area.	3	1. Breach of tank cover. 2. Breach of ventilation ductwork.	2	2

Fault Schedule: LAW Feed Receipt

(Sheet 4)

Study Area/Keyword: Filling DST - Effluent / Washing Hazard

Event Identifier	Initiating Event	Safeguards	Frequency	Hazard Consequence	Worker Consequence	Public Consequence
0/22	1. All effluents from wahing activities go into the tank. 2. Use of "exotic" decontaminants are not envisaged. 3. There is a drain on the stack	1. None identified at this time	4	1. No significant consequence identified.	1	1

Fault Schedule: LAW Feed Receipt

(Sheet 5)

Study Area/Keyword: Filling DST - Explosion / Overpressure Hazard

Event Identifier	Initiating Event	Safeguards	Frequency	Hazard Consequence	Worker Consequence	Public Consequence
0/12	1. Presence of organics, radiolytic hydrogen. 2. Pumping against a closed head. 3. Water hammer.	1. Extract system - reduces hydrogen concentration. 2. Water hammer to be taken into account on liquor line/pump design. 3. Potential for the build-up of radiolytic hydrogen to explosive concentrations to be prevented, i.e. using passive protection (e.g. a deterministic approach involving provision of vessel vent with appropriate sizing / configuration such that LEL cannot be reached with credit not taken for active ventilation systems). 4. Potential for significant radiolytic hydrogen production is low (reference: calculations performed by D. Vickers action at Hanford TWRS-P PHA+ Studies) confirming that for large volume vessels, the time taken to reach 1% hydrogen in air varies from tens of hours to several days with no credit taken from active ventilation systems. 5. Leak detection if line bursts. 6. Pump shut-off on overpressure.	3	1. Radiolytic hygrogen fire / explosion : 2. Overpressure in line; potential for explosion.	2	2

Fault Schedule: LAW Feed Receipt

(Sheet 6)

Study Area/Keyword: Filling DST - External Dose Hazard

Event Identifier	Initiating Event	Safeguards	Frequency	Hazard Consequence	Worker Consequence	Public Consequence
0/1	1. Shielding weakness - the contract spec. calls for material outside this shielding capability (wrt Cs-137). 2. Leakage of material. 3. Misvalving (three 3-way valves would need to be misrouted. 4. Overfilling of tank (double batch, misrouting,water flow)	1. Sheilding assesment. 2. Flush capability of the pump pit to reduce activity for maintenance operations. 3. Leaking material will drain back to the pit. 4. Leak detection in the pit - will shut off pumps. 5. Double block and bleed, position indicators on valves.	2	1. Liquor flows outside of containment. 2. Increased dose uptake.	2	1
0/2	1. Rain into the pit.	1. Light weather covering to protect from wind, rain etc. See action under "Operability."	3	1. Ingress of water through shielding into the tank causing overflow (if tank full).	2	2
0/3	1. Removal of pump shafts maintenance operations.. 2. Filling DST maintenance operations.	1. Mantainability of pumps (pump shafts) - they can be pulled out into a flexible pump receiver (mantainance of containment) - they are sent for ultimate disposal.	4	1. External dose.	1	1

Fault Schedule: LAW Feed Receipt

(Sheet 7)

Study Area/Keyword: Filling DST - Extreme Weather Hazard

Event Identifier	Initiating Event	Safeguards	Frequency	Hazard Consequence	Worker Consequence	Public Consequence
0/25	1. All equipment to be added will be designed to the Hanford Plant Standards. This is considered to cover all the extreme weather considerations. No further consideration of extreme weather in this part of the plant.	1. None Identified at this time	3	1. No hazard consequence identifed - facility assumed to cater for prevalent weather conditions.	1	1

Study Area/Keyword: Filling DST - Fire Hazard

Event Identifier	Initiating Event	Safeguards	Frequency	Hazard Consequence	Worker Consequence	Public Consequence
0/10	1. Potential for formation of ammonium nitrate in the HEPA filter. 2. Combustable material ignition (e.g. lubricants, paper HEPA filter).	1. Inventory of combustable material will be kept low. 2. Use of fire retardent materials.	2	1. Loss of HEPA filters caused by burning.	3	3
0/11	1. Fire in tumbleweed built up on surrounding fence - may be ignited by sun.	1. Administrative control by Hanford site / Benton County.	3	1. Fire spreads to tank farm - not considered likely.	2	2

Fault Schedule: LAW Feed Receipt

(Sheet 8)

Study Area/Keyword: Filling DST - Internal Dose Hazard

Event Identifier	Initiating Event	Safeguards	Frequency	Hazard Consequence	Worker Consequence	Public Consequence
0/4	1. Loss of ventilation. (Extract pumps failure, HEPA blockage, high wind etc). 2. Activity in seal pot (on ventilation extract demister).	1. Ventilation design : Pump redundancy; instrumentation on HEPA filter.	3	1. Potential for activity backflow from pit through risers. 2. Concern for maintenance or other workers (e.g. DOE workers) working in the area. 3. Inhalation pathway.	2	1

Fault Schedule: LAW Feed Receipt

(Sheet 9)

Study Area/Keyword: Filling DST - Loss of Containment Hazard

Event Identifier	Initiating Event	Safeguards	Frequency	Hazard Consequence	Worker Consequence	Public Consequence
0/7	1. Loss of heel in DST. 2. Load on top of tank. 3. Dropped load from adjacent (or own) work. e.g. mixer pump. 4. Loss/breach of HEPA filter - activity challenge to vent system (e.g. mixer pump discharging spray). 5. Tank rupture due to corrosion / erosion.	1. Operational controls preventing heavy load movement over tank. 2. Perimiter fence around tank farm. Outer construction and tank farm fence are the barriers. 3. Inlet filter to the tank to be provided. 4. Dp instrumentation, stack monitoring (mitigator). 5. Redundant (2 banks) of primary & secondary filters. 6. Demister/dryer system in the vent system. 7. Low liquor level interlock. 8. Vent. line is co-axial. Any breach of the inlet line (from DOE tank) to pump pit will give rise to liquor in thle line annulus. 9. Detection is provided, on detection the transfer pump is interlocked out.	3	1. Tank bottom distorted due to excessive vacuum. 2. Liquor losss.	2	2

Study Area/Keyword: Filling DST - Loss of Services Hazard

Event Identifier	Initiating Event	Safeguards	Frequency	Hazard Consequence	Worker Consequence	Public Consequence
0/17	1. Failure of grid etc	1. interlocks provided. 2. Ventilation back on within 2 hours.	3	1. Liquor import to DST at the time of loss of power. 2. Loss of ventilation.	2	2

Fault Schedule: LAW Feed Receipt

(Sheet 10)

Study Area/Keyword: Filling DST - Occupational Safety Hazard

Event Identifier	Initiating Event	Safeguards	Frequency	Hazard Consequence	Worker Consequence	Public Consequence
0/28	1. Electrical/mechanical handling concerns.	1. NFPA codes of design (consensus standard) to be used. 2. Access to tank farm is controlled by permit to work procedures. 3. Tank filling is a remote operation.	3	1. None Identified at this time	1	1

Study Area/Keyword: Filling DST - Seismic Hazard

Event Identifier	Initiating Event	Safeguards	Frequency	Hazard Consequence	Worker Consequence	Public Consequence
0/26	1. Damage to Transfer line.	1. Appropriate seismic hardening of building and SSCs as determined by the magnitude of any potential hazard.	2	1. Not known (An analysis is to be carried out by SAIC).	3	3

Study Area/Keyword: Filling DST - Shielding Hazard

Event Identifier	Initiating Event	Safeguards	Frequency	Hazard Consequence	Worker Consequence	Public Consequence
0/5	1. See external dose.	1. All feed / vent lines will be underground - self shielding. 2. HEPA filters are shielded. 3. There are area monitors in the vicinity.	1	1. Potential for external dose to workers / public.	1	1

Fault Schedule: LAW Feed Receipt

(Sheet 11)

Study Area/Keyword: Filling DST - Ventilation - Increased Load on System and / or Failure of System Hazard

Event Identifier	Initiating Event	Safeguards	Frequency	Hazard Consequence	Worker Consequence	Public Consequence
0/9	1. Spurious closure of dampers. 2. Excessive/rapid condensation causing vacuum formation.	1. Control of dampers will be interlocked with the extract fan operations. 2. Liquor itself warm (not greater than 100 deg F) 3. No mechanism for rapid cooling identified.	3	1. Excessive vacuum on vent. system.	2	1

Study Area/Keyword: Return of Concentrated Solids from T1104 to DOE via DST Pump Pit - External Dose Hazard

Event Identifier	Initiating Event	Safeguards	Frequency	Hazard Consequence	Worker Consequence	Public Consequence
0/78	None Identified	1. None Identified at this time	4	1. None Identified at this time	1	1

Study Area/Keyword: Transfer from DST to Facility - Corrosion / Erosion Hazard

Event Identifier	Initiating Event	Safeguards	Frequency	Hazard Consequence	Worker Consequence	Public Consequence
0/47	1. Solids in liquor transfer.	1. Design to meet specification 9 of the contract (transport velocities, miller numbers etc) with respect to solids characteristics.	3	1. Erosion due to solids.	1	1

Fault Schedule: LAW Feed Receipt

(Sheet 12)

Study Area/Keyword: Transfer from DST to Facility - Decontamination Hazard

Event Identifier	Initiating Event	Safeguards	Frequency	Hazard Consequence	Worker Consequence	Public Consequence
0/42	1. Activity build up.	1. Frequent flushing of transfer line after transfers. 2. Decontamination of the anulus can take place if required by utilising the risers if necessary.	4	1. Chronic depositiion.	1	1

Study Area/Keyword: Transfer from DST to Facility - Dropped Load / Impact Hazard

Event Identifier	Initiating Event	Safeguards	Frequency	Hazard Consequence	Worker Consequence	Public Consequence
0/51	1. Rupture due to JCB (Backhoe / mechanical digger) operations.	1. Limited access, construction concens to be addressed at the appropriate time. 2. Physical barrier.	3	1. Line rupture - activity release to ground.	2	1

Study Area/Keyword: Transfer from DST to Facility - Explosion / Overpressure Hazard

Event Identifier	Initiating Event	Safeguards	Frequency	Hazard Consequence	Worker Consequence	Public Consequence
0/39	1. Water hammer.	1. Expansiion loops, smooth bends in pipework.	3	1. Pressure fluctuations. No explosion ?	1	1

Fault Schedule: LAW Feed Receipt

(Sheet 13)

Study Area/Keyword: Transfer from DST to Facility - External Dose Hazard

Event Identifier	Initiating Event	Safeguards	Frequency	Hazard Consequence	Worker Consequence	Public Consequence
0/32	1. Loss of shielding - gradual (erosion) or sudden (dug up for example) of burm (heaped earthern structure).	1. Pipe route clearly marked up. 2. Erosion treatment of the burm. 3. Pipe route not normally accessible. 4. No liquor in line during transfers - will drain back to the facility. 5. The possibility of having a pipe trench is being investigated.	3	1. Increased dose uptake	2	2

Study Area/Keyword: Transfer from DST to Facility - Extreme Weather Hazard

Event Identifier	Initiating Event	Safeguards	Frequency	Hazard Consequence	Worker Consequence	Public Consequence
0/49	1. Effects depend on how the line is routed (underground vs. burmed).	1. None Identified at this time	3	1. No hazard consequence identifed - facility assumed to cater for prevalent weather conditions.	1	1

Study Area/Keyword: Transfer from DST to Facility - Internal Dose Hazard

Event Identifier	Initiating Event	Safeguards	Frequency	Hazard Consequence	Worker Consequence	Public Consequence
0/33	None Identified	1. Isolation valves to be provided at each end to reduce potential for misrouting. 2. Control strategy.f0/26	4	1. None Identified at this time	1	1

Fault Schedule: LAW Feed Receipt

(Sheet 14)

Study Area/Keyword: Transfer from DST to Facility - Loss of Containment Hazard

Event Identifier	Initiating Event	Safeguards	Frequency	Hazard Consequence	Worker Consequence	Public Consequence
0/36	1. Overfill of V1101.	1. Control of transfer by the facility. See study of V1101.	3	1. Liquor leakage.	2	1

Study Area/Keyword: Transfer from DST to Facility - Loss of Services Hazard

Event Identifier	Initiating Event	Safeguards	Frequency	Hazard Consequence	Worker Consequence	Public Consequence
0/45	1. Loss of flush water.	1. The line will be vented/drain down to the facility.	3	1. No acute effects.	1	1

Study Area/Keyword: Transfer from DST to Facility - Ventilation - Increased Load on System Hazard

Event Identifier	Initiating Event	Safeguards	Frequency	Hazard Consequence	Worker Consequence	Public Consequence
0/37	1. Transfer line empty and not isolated.	1. Length of line - the DST fan will have little effect. 2. Control and isolation of transfer line when not in use. 3. Any interaction under worst case conditions is likely to be minimal.	3	1. Cross connection between ventilation systems (DST and facility).	1	1

5.2.2 LAW Feed Receipt Evaporator

The pretreatment process receives LAW feeds, permeate liquor from HLW Envelope D processing, and miscellaneous recycle streams from the TWRS-P Facility. The LAW feeds may contain entrained solids that need to be removed to ensure efficient operations of ultrafilters. Solids removal is conducted with ultrafiltration. To minimize the volume throughput of the ultrafiltration process, the feed stream to the LAW pretreatment is concentrated. For optimum performance of the ion exchange processes, a sodium concentration of 5M in the LAW feed is required. This is achieved by concentrating to ~7M Na in the LAW feed evaporator, then adding a fixed volume of wash water in the ultrafiltration process to give a final concentration of ~5M. The wash water is to dissolve soluble components of the entrainment solids.

Feeds are transferred in batches to the two receipt tanks V2101, V2102, each holding one day's capacity. A typical daily feed consists of one batch of LAW feed (Envelope A, B, or C) plus one batch of Envelope D permeate plus any recycled material. The two tanks are operated on the basis of one feeding the evaporator while the other is filled, mixed, and sampled. The agitation of the tanks is by a low-maintenance, high-reliability, fluidics device (no moving parts).

The feed is pumped at a controlled rate into the evaporator, entering the process at a point between the circulation pump discharge and the inlet to the reboiler. Each feed tank has its own feed pump, P2101, P2102, and feed flow rate is varied by controlling the speed of these pumps.

The LAW feed evaporator is a continuous, submerged-tube, forced-circulation evaporator, a type commonly used in the process industries. Advantages of this type include the ability to handle a wide range of feed flows, compositions, and variable evaporation rates. To minimize corrosion from chlorides in the feed, the evaporator will be operated under vacuum. This will have the effect of lowering the boiling temperature of the process.

The LAW is recirculated at a high flow rate from the separator vessel V2103 through a shell-and-tube heat exchanger E2101, referred to as the reboiler. The recirculation pump, P2104 is a centrifugal type equipped with water flushed, tandem mechanical seals. The high flow rate enables a large input of heat without resulting in a large temperature rise. To prevent the liquid from boiling inside the heat exchanger tubes, sufficient hydrostatic head is maintained above the reboiler to suppress the boiling point. As the liquid travels upward from the reboiler, the hydrostatic head diminishes and flash evaporation occurs as the flow enters the separator vessel. The liquid continues to flash to equilibrium, and the vapor and liquid streams are disengaged. The liquid stream continues to circulate in this closed loop, while the vapor stream passes to the primary condenser E2102, which is installed at barometric height.

Concentrated LAW product is pumped out of the evaporator system by a variable speed pump P2103. The product is removed from the recirculation line at a point between the recirculation pump discharge and the feed inlet point. Concentrated product is pumped to an intermediate tank, (V1101) then transferred to the ultrafiltration process. The product pump P2103 is a centrifugal type, equipped with water-flushed, tandem mechanical seals. Between the evaporator product offtake and the concentrated LAW receipt tank (V1101), the stream passes through a heat exchanger E2104, which cools the concentrate to 25 °C (77 °F).

Very dilute evaporator feeds, (e.g., resulting from large recycle of aqueous effluent from the pretreatment processes) may need two or more passes through the evaporator to achieve the required concentration in the final product. This is possible by returning the LAW concentrate from the product tank back to the feed tanks for reprocessing.

The evaporator primary condenser (E2102) is a water-cooled shell-and-tube unit, installed at barometric height, with condensation taking place on the shell side. Process condensate from the primary condenser drains by gravity to a small seal vessel V2105, which is shared with the inter- and after-condensers (E2105A, E2105B, and E2103). Process condensate in this vessel is monitored continuously for activity. If the activity is within limits for Effluent Treatment Facility (ETF), the condensate is transferred by ejector to the process condensate tanks. If the activity exceeds limits for ETF, then the condensate is transferred by a different ejector to the contaminated process condensate tank for internal recycle within the BNFL treatment facility.

Vacuum in the system is maintained by a two-stage steam ejector W2101A/B, W2102A/B, with inter-condenser E2105A/B. The ejector exhaust passes to the after-condenser E2103. The inter- and after condensers are water-cooled shell-and-tube units, with condensation taking place on the shell side. Noncondensable gases that have been extracted from the evaporator pass through a mist de-entrainment vessel (V2108) to the vent scrubber system. Condensate from the after-condenser and mist de-entrainment vessel (V2108) drains by gravity to the seal vessel V2105.

Steam condensate from the reboiler is drained to a small intercept vessel V2104. Condensate from this vessel is continuously monitored. If no activity is detected in the steam condensate, it is transferred by ejector to the boiler condensate return tank. If activity is detected, the steam condensate is transferred to the process condensate tanks, or the contaminated process condensate tank.

The sodium concentration of the evaporator feed is first determined by sampling. The required evaporation rate can then be calculated. From the calculated evaporation rate, first estimates of the required feed, steam, and product flows can be made.

The evaporator is then charged with feed and the recirculation pump, primary condenser, after condensers, and the vacuum ejectors started. When the evaporator liquid content reaches the normal operating level, the feed is set to the required flow rate and the steam supply to the reboiler is opened. Once the system reaches its normal operating temperature and boiling begins, the steam flow rate to the reboiler is set to the required flow rate.

Product flow from the evaporator is varied to maintain a constant liquid level in the evaporator. During constant running, the product concentration is monitored by periodic sampling (Vessel V1101) and either the feed flow or the steam flow rate to the reboiler are adjusted to obtain the required product. In between taking product samples, the product concentration can be estimated from the density of the recirculation vessel contents. Concentrate from the product tanks can be returned to the feed tanks for reprocessing if the product fails to meet the required concentration, or if multiple passes through the evaporator are required for processing very dilute feeds, e.g., if a large quantity of condensate is recycled.

Control of the vessel vacuum is achieved by controlling the ingress of noncondensable gas into the vacuum system. A small stream of filtered, low-pressure air connects into the suction line of the first-stage vacuum ejector (W2101A/B). By regulating the flow of air using a control valve, the pressure in the evaporator system can be controlled.

Switching between feed tanks V2101 and V2102 can be carried out safely while the evaporator is running since the recirculation flow within the evaporator is many times greater then the feed flow. This allows the feed to be briefly interrupted without significant upset to the process.

The evaporator is shut down by stopping the evaporator feed and the steam supply to the reboiler. Boiling continues for a short time as the reboiler system cools. Once the system has ceased boiling, the steam supply to the vacuum ejectors is shut off and the cooling water flow to the condensers stopped. The inventory of concentrated LAW in the evaporator can then be either pumped away using the product pump or left in place in readiness for restarting the evaporator.

The following effluent streams will be subject to continuous radiation monitoring:

1) Steam condensate
2) Process condensate

The following utility streams will be subject to continuous radiation monitoring:

1) Cooling water return – primary condenser
2) Cooling water return – intercondenser
3) Cooling water return – after-condenser
4) Chilled water return – concentrated LAW cooler

5.2.2.1 LAW Feed Receipt Evaporator Study Areas and Hazard Evaluation Team

The LAW Feed Receipt evaporator performs an evaporation process. Included in this process module for hazard evaluation study and review are the feed, concentrated product, and the condensate systems. PFD O/PR/2100 was used in the review of the following study areas:

1) Feed tanks (one filling, one feeding)
2) Evaporation and the evaporator
3) Concentrated LAW handling – evaporator discharge and tanks
4) Condensate collection and handling

The hazard evaluation team members and respective disciplines are listed as follows:

R. Cullen – Safety, Team Leader
S. Wright – Control and Instrumentation
M. Johnson – Technical Manager, LAW Waste evaporation and pretreatment experience
A. Jenkins – Shielding and Criticality
M. Page – Technical Manager, process engineering and design
D. Vickers – Process engineering and design
R. Collins – Process engineering and design
G. Sutherland -Safety, Scribe
J. Isherwood – Mechanical engineering and design

5.2.2.2 LAW Feed Receipt Evaporator Fault Schedules

Fault Schedule: LAW Feed Receipt Evaporator (Sheet 1)

Study Area/Keyword: Decontamination Hazard

Event Identifier	Initiating Event	Safeguards	Frequency	Hazard Consequence	Worker Consequence	Public Consequence
2100/12	1. Maintenance / replacement of evaporator. 2. Activity accumulation in evaporator.	1. Wash rings in vessels for removal of activity in wash through. 2. The evaporator may be in-cell for life (depending on M & FTS assessment). 3. If replacement is required, suitable access route will be required. 4. Tanks can be washed through with an appropriate decontaminant. 5. Decontamination of tubes and ejectors can take place via the plant wash system, prior to hands-on maintenance.	4	1. Increase in radiation.	1	1

Fault Schedule: LAW Feed Receipt Evaporator

(Sheet 2)

Study Area/Keyword: Domino (Other Effects) Hazard

Event Identifier	Initiating Event	Safeguards	Frequency	Hazard Consequence	Worker Consequence	Public Consequence
2100/21	1. Emptying ejector in error or out of sequence. 2. Loss of demister pad. 3. Increase in concentration of process feed forward. 4. Mis-routing of Sr/TRU feed (back to solids separation) to the ionex and subsequent vitrification. 5. Mis-routing of concentrated feed to solids spearation. 6. Overconcentration. 7. Number of recycle routes that are available - correct routing of liquor.	1. Material can be recovered back into the process. 2. Process condensate is monitored for activity levels. 3. Overconcentrated material can be diluted. 4. Underconcentrated product can be recycled. 5. Density measurements. 6. The levels in the tanks and Cs breakthrough monitor. 7. Activity of concentrated product not greater than Sr/TRU product that will normally returned. 8. At optimum process condirtions, solids would not be expected to occur.	3	1. Mis-routed material goes to plant wash vessel. 2. Potential for unintentional / adverse chemical reaction (see interaction matrix). These will be reviewed at the appropriate time. 3. Potential for solids in these process vessels under abnormal conditions. 4. Solids fed forward results in reduced ionex efficiency and may increase activity levels (see 2200/0). Potential for product to be out of specification. 5. Loss of demister pad would result in increased entrainment of liquor in ventilation system (carry-over). 6. Overconcentration results in presence of solids. 7. The number of re-cycle routes into solids removal may have an impact on the solubility characteristics of the solutes within this process liquor. 8. Increased concentration of process feed components (see 4 above).	1	1

Fault Schedule: LAW Feed Receipt Evaporator

(Sheet 3)

Study Area/Keyword: Dropped Load / Impact Hazard

Event Identifier	Initiating Event	Safeguards	Frequency	Hazard Consequence	Worker Consequence	Public Consequence
2100/24	1. Flask dropped onto cell roof due to transfer. 2. Evaporator dropped during removal.	1. Crane integrity. 2. Zone out (restrict movememt) over potentially vulnerable areas. 3. A structural assessment will be carried out as part of the detail design.	2	1. Drop large load on cell roof. 2. Potential of roof break-through. 3. Potential for damage to incell plant items. 4. Potential for outcell activity.	1	1

Study Area/Keyword: Effluent / Washing Hazard

Event Identifier	Initiating Event	Safeguards	Frequency	Hazard Consequence	Worker Consequence	Public Consequence
2100/19	1. Corrosion / Erosion. 2. Glass particles in effluent.	1. Compatable materials of construction and with process streams and reagents. 2. Segregation of effluents, depending on activity. See materials compatability matrix.	3	1. None Identified at this time	1	1

Fault Schedule: LAW Feed Receipt Evaporator

(Sheet 4)

Study Area/Keyword: Explosion / Overpressure Hazard

Event Identifier	Initiating Event	Safeguards	Frequency	Hazard Consequence	Worker Consequence	Public Consequence
2100/9	1. Reverse flow steam to vessel - blocked outlet and pressurisation of vessel via plant wash ejectors.	1. Systems will be protected from overpressure and high temperatures. 2. Potential for the build-up of radiolytic hydrogen to explosive concentrations to be prevented, i.e. using passive protection (e.g. a deterministic approach involving provision of vessel vent with appropriate sizing / configuration such that LEL cannot be reached with credit not taken for active ventilation systems). 3. Potential for significant radiolytic hydrogen production is low (reference: calculations performed by D. Vickers action at Hanford TWRS-P PHA+ Studies) confirming that for large volume vessels, the time taken to reach 1% hydrogen in air varies from tens of hours to several days with no credit taken from active ventilation systems. 4. Plant wash ejectors are used only infrequently.	2	1. Backflow of steam to tank causing high temperature/pressure. (Higher concentration of activity in product tanks).	1	1

Fault Schedule: LAW Feed Receipt Evaporator

(Sheet 5)

Study Area/Keyword: External Dose Hazard

Event Identifier	Initiating Event	Safeguards	Frequency	Hazard Consequence	Worker Consequence	Public Consequence
2100/0	1. Cell breach. 2. Inadequate sheilding. 3. Liquid carry-over into vent system. 4. Over-concentration of liquor. 5. Sampling operations.	1. Cladded cell with sump and leak detection system - liquor contained. 2. Product concentration indication provided - loss of containment is revealed. 3. Radiation monitoring of stream lines. 4. Temperature of indication process liquor and chilled water. 5. Cooling unit likely to be a co-axial pipe - lower potential for leakage. 6. Pumps, and transducers may be in bulges, with wash capability - easier to maintain. 7. Design provisions would include high level hard wired trip, to halt filling operations. 8. On tube leak, pressure gradient is from service into the process. 9. Adequate shelding - based on the most onerous Envelope B inventory. 10. Entrained solids carried over from an upstream operation is unlikely to lead to a significant increase in activity. 11. Bulk of activity is in permeate phase - activity of spillage likely to be lower.	2	1. Potential for increased dose uptake to Workers / Public. 2. Loss of containment from pumps, lines, etc. 3. Liquor leakage. 4. Liquid carry-over into vessel vent system results in presence of radionuclides in inadequately shielded location. 5. Overfilled feed tank. 6. Breech of cooler tubing.	2	1

Fault Schedule: LAW Feed Receipt Evaporator

(Sheet 6)

Study Area/Keyword: Extreme Weather Hazard

Event Identifier	Initiating Event	Safeguards	Frequency	Hazard Consequence	Worker Consequence	Public Consequence
2100/22	1. High rainfall, flooding, snow. 2. Low temperature. 3. Temperature fluctuations during spells of extreme weather.	1. The design will cater for reduced cooling water efficiency. 2. Protection required will be provided by facility.	3	1. No hazard consequence identifed - facility assumed to cater for prevalent weather conditions.	1	1

Study Area/Keyword: Internal Dose Hazard

Event Identifier	Initiating Event	Safeguards	Frequency	Hazard Consequence	Worker Consequence	Public Consequence
2100/4	1. Release of activity. Leakage (see 2100/0). 2. High activity in the vessel vent system. 3. Additional challenges to the ventilation system due to overboiling.	1. The condenser will be appropriately sized to forsee the potential for this scenario. 2. High activity in process condensate - subject to monitoring and treatment. 3. There are barometric heads on all ejectors.	3	1. Increased Internal Dose to Workers / Public.	2	2

Fault Schedule: LAW Feed Receipt Evaporator

(Sheet 7)

Study Area/Keyword: LAW Melter Feed Evaporator - Corrosion / Erosion Hazard

Event Identifier	Initiating Event	Safeguards	Frequency	Hazard Consequence	Worker Consequence	Public Consequence
2100/20	1. Enhanced levels of Chloride negative ions in feed.	1. Compatable materials of construction and with process streams and reagents. 2. Plant materials study ongoing. 3. Pumping is positively pressurised. 4. Minimisation of bend radii. 5. Design will prevent cavitation. 6. Temperature in this area will be a maximum of 50 degC in LAW feed evaporator. 7. Erosion due to recrystallisation not likely to be a problem due to the solubility of Na at this operating temperature. 8. Pump sequencing will prevent pump against closed head. 9. 316L grade stainless steel is suitable at this temperature (viz consultation with M&FTS section).	3	1. Potential for loss of primary containment. 2. Potential for leakage.	2	1

Fault Schedule: LAW Feed Receipt Evaporator

(Sheet 8)

Study Area/Keyword: Loss of Air Hazard

Event Identifier	Initiating Event	Safeguards	Frequency	Hazard Consequence	Worker Consequence	Public Consequence
2100/17	1. Loss of air inbleed. 2. Leak, loss of compression, etc,. 3. Failure of air supply, loss of compressor, etc,.	1. Air supplies to pneumercators will have pressure switches to permit monitoring. 2. Vessel designed for absolute vacuum.3. Loss of air would be a revealed event.	2	1. Process will be left in a safe state. 2. Vacuum increases slowly. 3. Loss of ionex feed, loss of sampling facility. 4. Delay to process. 5. Loss of air to RFDs should not result in activity being drawn up into the air supply due to barometric head. 6. Pneumercators would fail to read.	1	1

Fault Schedule: LAW Feed Receipt Evaporator

(Sheet 9)

Study Area/Keyword: Loss of Containment Hazard

Event Identifier	Initiating Event	Safeguards	Frequency	Hazard Consequence	Worker Consequence	Public Consequence
2100/7	1. Loss of cladding. 2. Service line rupture (water hammer in line). 3. Activity migration due to diffusive effects, resulting backflow up ventilation line (see External Dose). 4. This backflow may be against the pressure differential. 5. Heat exchanger E2101 (main boiler) ruptures.	1. All-welded line in-cell. 2. Steam line design will be to ensure that there it will be self draining, and such that condensate accumulation will be prevented. 3. Sufficient pressure gradient into process - more likely to get activity & steam back into process. 4. Contaminated process steam goes into vessel V2104 and is monitored and can be appropriately treated. 5. Liquor leakage revealed by leak detectors. 6. Bund will contain the largest volume in the cell (60 M^3). 7. Catastrophic failure would be revealed.	2	1. Active liquor spread into operating areas. 2. A small breech would lead to a small reduction in evaporator efficiency.	2	1

Fault Schedule: LAW Feed Receipt Evaporator

(Sheet 10)

Study Area/Keyword: Loss of Power Hazard

Event Identifier	Initiating Event	Safeguards	Frequency	Hazard Consequence	Worker Consequence	Public Consequence
2100/14	1. Loss of Power.	1. Safety-critical systems will fail safe on loss of power. 2. Shut steam off by interlock. 3. Vacuum relief to prevent boiling. 4. Backup power may be available. 5. The columns can be restarted on restoration of feed. 6. Loss of power is a revealed event.	3	1. Pumps will stop. 2. Loss of supervisory system. 3. Local boiling inside tubes leading to solids deposition on tubes. 4. Loss of feed forward to ionex, for example. 5. Loss of recycle.	1	1

Fault Schedule: LAW Feed Receipt Evaporator

(Sheet 11)

Study Area/Keyword: Loss of Water Hazard

Event Identifier	Initiating Event	Safeguards	Frequency	Hazard Consequence	Worker Consequence	Public Consequence
2100/42	1. Leak, failure of circulation, etc,. 2. Loss of water to pump seals. 3. Loss of condensor cooling. 4. Loss of chilled water system.	1. Low / no flow and high temperature alarms - event is revealed. 2. Temperature indication of ion exchange feed liquor. 3. Liquor to ionex does not exceed 25 degC - insignificant evaporation. 4. Feed could be interrupted to allow cooling before introduction to ionex, to gain optimal efficiency of column.	3	1. Immediate plant shutdown. 2. Hot liquor to product tanks. 3. Potential for damage to pump seals on loss of water flow, and subsequent loss of pump capability.	1	1

Fault Schedule: LAW Feed Receipt Evaporator

(Sheet 12)

Study Area/Keyword: Shielding Hazard

Event Identifier	Initiating Event	Safeguards	Frequency	Hazard Consequence	Worker Consequence	Public Consequence
2100/5	1. Large bore penetrations in this area.	1. No straight line shinepath via penetrations (use of joggle-boxes, etc,.) - shielding assessment ongoing. 2. Low product activity - leading to low contact dose rates.	1	1. Potential for direct radiationl dose to workers / public.	2	1

Study Area/Keyword: Ventilation - Failure of Vessel Vent System Hazard

Event Identifier	Initiating Event	Safeguards	Frequency	Hazard Consequence	Worker Consequence	Public Consequence
2100/32	1. Loss of steam to ejectors. 2. Loss of ventilation system. 3. Reverse flow of gas to evaporators. 4. Suppression of boiling in evaporator.	1. An air inbleed is available to relieve vacuum. 2. Pipiwork is resilient. 3. Transient pressure fluctuation only; of the order of a few seconds. 4. There is additional airflow, due to RFD operations.	3	1. Potential for ventilation system to collapse under transient negative pressure. 2. Possible damage to filters - Pull lutes from liquor in system. 3. Shutdown of system if ventilation lost; See loss of service.	2	2

Fault Schedule: LAW Feed Receipt Evaporator

(Sheet 13)

Study Area/Keyword: Ventilation - Overpressurisation Challenge Hazard

Event Identifier	Initiating Event	Safeguards	Frequency	Hazard Consequence	Worker Consequence	Public Consequence
2100/45	1. Failure of ventilation system.	1. The system is pumped - no fluidic devices (no RFDs, etc,.) therefore, low impact.	3	1. A slow pressurisation due to the low flow of non-condensable gasses into the system.	2	2

5.2.3 Entrained Solids Removal System

The supernate fed to the plant contains entrained solids that require removal to protect the ion exchange beds. Contract Specification 7.2 states that the insoluble solids fraction will not exceed 5 vol% of the waste transferred (DOE-RL 1996). For the purposes of the flowsheet, the vol% solids refers to a waste feed containing 6.5M Na. This value provides a reasonable maximum volume of solids transferred per unit mass of sodium. At the time of writing, the composition and particle size distribution of the entrained solids have yet to be determined.

The ultrafiltration process includes two basic filtration operations, the removal of entrained solids from the feed to ion exchange, and the filtration of the strontium/transuranic (TRU) precipitate. The relationship of these operations to feed envelopes and the LAW or HLW options are described as follows.

1. Entrained solids removal from Envelopes A, B, and C feeds. In the LAW-only and LAW/HLW options, the solids removed from Envelopes A, B, and C would be returned to DOE. BNFL is evaluating the further pretreatment of these solids for vitrification.

2. The precipitation of strontium/TRU from Envelope C feed. In LAW-only option these solids are returned to DOE, and under the LAW/HLW option, these solids are included as feed to the HLW melter.

The process equipment to carry out these two unit operations contains the same components. The process equipment can therefore be combined into one unit operation with considerable savings in the capital cost of the equipment.

In the HLW option, there is the requirement to separate the entrained solids and strontium/TRU precipitate streams for Envelope C. Therefore, the two unit operations must remain independent. The same equipment can be used for both operations; the flowrate through the plant is reduced by one half because the ultrafilter would be used to concentrate the two slurries on alternate days. However, the design has been modified to provide a second ultrafiltration loop that would raise the Envelope C flowrate to the same value as Envelope A and B flowrate, while providing the required spare capacity and reliability for processing Envelopes A and B.

Caustic washing of the entrained solids will be evaluated. Caustic washing of the separated solids reduces the solids mass by leaching soluble constituents (e.g., aluminum). The leachate is evaluated for feed to the LAW melter system. The residual solids are evaluated for feed to the HLW melter system or return to the DOE. The caustic washing step may be omitted if the entrained solids do not contain soluble constituents (e.g., aluminum).

Concentration of Entrained Solids Using Ultrafiltration

The concentrate from the LAW feed evaporator is fed to the ultrafiltration buffer tank (74 m^3 [19,550 gal]) V1101 where the contents are sampled to check evaporator performance and to specify the ultrafiltration rate required to concentrate to 50 vol%, before being transferred to the ultrafiltration vessels, V1102A/B (74 m^3 [19.5 kgal]). The recirculation pump P1101A or B is then primed and the ultrafiltration loop (G1101AB or CD) is set up with the permeate lines isolated. The pressure in the recirculation loop is adjusted to 5 bar_g at the inlet to the first module. The permeate lines are then opened and the contents of V1102A/B are concentrated to 50 vol% solids by passing through ultrafilters G1101A/B (or G1101C/D). After passing through the ultrafilters, the circulating streams is passed through a water-cooled concentric pipe heat exchanger (E1101A/B) to maintain the stream temperature at 25 °C then returned to V1102A/B.

The concentrated slurry remaining in V1102A/B is then diluted with an equivalent volume of water while continuing to operate the vitrifiltration loop. The slurry is reconcentrated to 50 vol% via pump P1101A/B in the filtration loop. This is repeated a maximum of 4 times to reduce the sodium content to the required level. If the solids concentration of the feed is significantly lower than 2.2 vol%, then the washing of the entrained solids would only occur when a minimum quantity of 50 vol% slurry had been produced by processing a number of batches of feed. After the final concentration step to 50 vol% the filtration loop is stopped and drained. The contents of the tank is then transferred to the entrained solids storage vessels, V1108A/B (225 m^3 [59.5 kgal]). If the entrained solids intermediate LAW product is to be returned to the DOE, then the solids are adjusted to return pipeline conditions and DOE storage tank requirements. The storage tank requires agitation to ensure resuspension of the solids within the sludge prior to discharge to a DOE-owned tank. The sludge is returned to the DOE via a pipeline (provided as part of this project) as a pumped transfer via P1103A. The interface point for the return of intermediate LAW products via pipeline to the DOE is nozzle A in central pump pit 241-AP-26A. The DOE provides a pipeline from the interface point to the DOE-operated DSTs.

The clean permeate is fed to a sample vessel V1103A/B (94 m^3 [24.8 kgal]) to check that the solids content has been reduced to an acceptable level before being fed by a reverse flow diverter (RFD) P1104A/B to the cesium removal buffer storage, V2204 (94 m^3 [24.8 kgal]). If the solids contents of the permeate is high, the batch is recycled to the ultrafilter feed tank V1102A/B.

An RFD is a fluidic device in common use at BNFL facilities for the transfer of liquids and slurries. The in-cell components of the RFD pump system have no moving parts and therefore are maintenance-free. The out-cell components of the RFD control system do not come into contact with the radioactive fluid or air and therefore maintenance of valves or other components can be undertaken readily. In-cell the RFD pump consists of a primary controller, a charge vessel, and the RFD footpiece. The primary controller consists of a suction jet pump, linked by pipework to the sample tank and a drive jet pump linked to the charge vessel. The RFD footpiece is linked to the sample tank and the charge vessel. The RFD footpiece and the primary controller jet pumps consist of opposing nozzles, similar to those of an ejector system. On the suction stroke air is admitted into the suction jet pump which draws fluid from the sample tank via the RFD footpiece into the charge vessel to a preset level. On the drive stroke the air admitted into the drive jet pump pressurizes the fluid in the charge vessel and a “dollop” of fluid accelerates across the RFD footpiece nozzles and into the delivery line to V2106. The pumping sequence consists of a number of “dollop” deliveries, controlled by a secondary controller, consisting of solenoid valves, filters, regulators and a PLC situated out-cell.

Precipitation of Strontium/TRU – LAW Envelope C Only

In order to meet the radionuclide concentration limits for the Immobilized Low-Activity Waste (ILAW) product, it is necessary to remove the strontium and TRU from the waste stream for Envelope C waste. The limits in the glass are 100 nCi/g for transuranics (Class C limits as defined in 10 CFR 61.55) and an average concentration for strontium-90 of less than 20 Ci/m^3 (specification of the contract [DOE 1996]).

Envelope C waste contains aqueous soluble organic compounds that chemically bind with the strontium, TRU, and other metal cations. Strontium and TRU are not removed efficiently by conventional ion exchange.

After removing the entrained solids from LAW Envelope C feed, the permeate collected in Tank V1103B is transferred to vessel V1102A. The solution is heated to 50 °C to enhance the precipitation process.

Reagents are added over the next 2 hours to commence precipitation. The 19 M sodium hydroxide is first added to raise the free hydroxide to 1.0 M. The 3.5 M ferric nitrate is then added to give a solution of 0.1M ferric floc. The 1.0 M strontium nitrate is then added to generate a solution of 0.1M concentration. The strontium and transuranics are precipitated. The vessel contents are cooled to 25 °C.

The operation described above is also used to concentrate the strontium and TRU precipitates from Envelope C feed. If the LAW/HLW option is conducted, the Sr/TRU precipitates are washed and transferred to vessel V4103 for feed to the HLW melter.

Following precipitation, the vessel contents are sampled to specify the ultrafiltration rate required to concentrate to 50 vol%.

Permeate Backwash

In ultrafiltration the slurry flows through a hollow tube of filter media resulting in an increase in the solids concentration in the slurry as the result of the liquid passing through the filter media. With use the filtration rate may be reduced because of the filter media becoming “blinded” with solids. In this situation, a reversed, pulsed flow of clean liquid is used to purge solids blinding the filter media. A pulse pot (V1106 A, B, C, or D) containing 50 L (13.2 gal) is connected to 10 bar_g plant air supply and a pulsed flow is created by switching the valve on and off in the line connecting the pulse pot to the filter.

Nitric Acid Backwash

Nitric acid backwash is only initiated when the ultrafilter has been blinded to an extent that the permeate rate is limiting the capacity of the plant. The following precautions must be taken to avoid excessive temperature rise in the ultrafilter circuit. Because the feed to the ultrafilter is caustic, there could be a significant reaction with the nitric acid. The processing of the batch of feed must be completed and the vessel V1102A or V1102B emptied. A flush of the ultrafiltration loops initiated using 5 m^3 (1321 gal) of process water to the tank. Then the pulse pot is filled with water and a second water flush is initiated. Finally, nitric acid is introduced into the pulse pot and the recirculation loop is changed to dissolve material fouling the ultrafilter tube.

Caustic Backwash

Caustic (sodium hydroxide) solution is used to dissolve solids blinding the ultrafilter.

Because the feed to the ultrafilter is caustic, there is no requirement for a flush prior to the caustic wash nor do vessels V1102A or V1102B need to be emptied. A flush of the ultrafilter is initiated by stopping pump P1101A/B. Then caustic is introduced into pulse pot. The pulse pot is charged to 10 bar_g with plant air and a pulse flow is created by switching the valve on and off in the line connecting the pulse pot to the filter.

5.2.3.1 Entrained Solids Removal System Study Areas and Hazard Evaluation Team

The hazard evaluation team reviewed Entrained Solids Removal PFD O/PR/2200 for deviation from normal operations in the following areas:

1) Feed receipt and sampling
2) Transfer to the next vessel, ultrafiltration, and washing
3) Transfer of concentrated entrained solids to 60-day storage tank
4) Permeate collection and discharge

When processing Envelope C waste, the ultrafiltration process will remove precipitated strontium and TRU substances. The following three additional areas of study were investigated:

1) Strontium/TRU precipitation
2) Ultrafiltration and washing
3) Transfer of concentrated solids to the 60-day storage tank

The hazard evaluation team members and disciplines are listed as follows:

R. Cullen – Safety, Team Leader
A. Jenkins – Radiation and Shielding
M. Johnson – Project Management, LAW waste evaporation and pretreatment experience
S. Parr – Radiation and Shielding
S. Warburton – Radiation and Shielding
S. Wright – Control and Instrumentation
M. Page – Process
N. Bailer – Mechanical
F. Schoffner – Chemicals and process services
D. Vickers – Process
K. Colebrook – Process
G. Sutherland – Safety, Scribe

Fault Schedule: Entrained Solids Removal

(Sheet 1)

Study Area/Keyword: Corrosion / Erosion Hazard

Event Identifier	Initiating Event	Safeguards	Frequency	Hazard Consequence	Worker Consequence	Public Consequence
1/23	1. Cooling lost due to plug. 2. Ultrafilter circuit becomes eroded. 3. Potential for enhanced erosion due to solids handling. 4. Hot permeate and acidic conditions due to addition of backwash liquors - enhanced erosion.	1. Pressure differential monitoring of the ultrafilters. 2. Physical properties of the solids may be relatively benign. 3. Development work is ongoing to evaluate the magnitude of the problem. 3. Pump could be in bulge (hands on) maintenance or require remote handling depending on activity level. 4. Ultrafilters and pumps can be maintained. 5. Ejectors are replaced periodically.	3	1. Gradual erosion within recirculation pump P1101A/B with eventual potential for leakage.	2	1

Study Area/Keyword: Decontamination Hazard

Event Identifier	Initiating Event	Safeguards	Frequency	Hazard Consequence	Worker Consequence	Public Consequence
1/44	1. Activity accumulation in cell. 2. Decontamination of system prior to maintenance. 3. Disposal of effluents.	1. Wash-rings and emptying ejectors for wash down and decontamination. 2. Sample sentencing of effluents.	4	1. Contamination hazard in cell or within system during maintenance. Potential for increased dose uptake to maintainers.	1	1

Fault Schedule: Entrained Solids Removal (Sheet 2)

Study Area/Keyword: Domino (Other Effects) Hazard

Event Identifier	Initiating Event	Safeguards	Frequency	Hazard Consequence	Worker Consequence	Public Consequence
1/52	1. Solids in permeate stream. 2. Cross-contamination of Sr / TRU and Entrained solids. 3. Out-of-Spec Sr / TRU, entrained solids in feed. 4. Inefficient washing. 5. Variation in process chemistry and temperature could cause solids to appear where unwanted.	1. Downstream sampling may reveal these problems. 2. Operations can be conducted to achieve segregation.	3	1. Inefficient washing leading to contamination of (soluble Na / Sr) 60-day return feed to DoE. 2. Product quality issue and / or process operability e.g. blockage of IEx columns. 3. Inefficient washing affects intermediate product quality.	1	1

Study Area/Keyword: Dropped Load / Impact Hazard

Event Identifier	Initiating Event	Safeguards	Frequency	Hazard Consequence	Worker Consequence	Public Consequence
1/27	1. Handling / maintenance of ultrafilter tubes. 2. Assessment of mechanical handling operations will be required, together with full Hazard Evaluation Study of MHDs.	1. Removal / replacement route to ensure that no damage to plant will result if a drop load occurs.	2	1. Potential release of activity due to dropped flask. Potential for increased dose uptake to maintainers.	1	1

Fault Schedule: Entrained Solids Removal

(Sheet 3)

Study Area/Keyword: Effluent / Washing Hazard

Event Identifier	Initiating Event	Safeguards	Frequency	Hazard Consequence	Worker Consequence	Public Consequence
1/50	1. Washings from Cell Sump. 2. Raw (River) water used for Process.	1. Cell sump contents are ejected to Plant wash tanks. 2. Water source not to be via River (not suitable for Process). 2. Washings / effluents are sampled and sentenced.	4	1. Refer to Fault Schedule Entries 1/0 and 1/5.	1	1

Fault Schedule: Entrained Solids Removal

(Sheet 4)

Study Area/Keyword: Explosion / Overpressure Hazard

Event Identifier	Initiating Event	Safeguards	Frequency	Hazard Consequence	Worker Consequence	Public Consequence
1/11	1. Generation of radiolytic gasses.	1. Potential for the build-up of radiolytic hydrogen to explosive concentrations to be prevented, i.e. using passive protection (e.g. a deterministic approach involving provision of vessel vent with appropriate sizing / configuration such that LEL cannot be reached with credit not taken for active ventilation systems). 2. Potential for significant radiolytic hydrogen production is low (reference: calculations performed by D. Vickers action at Hanford TWRS-P PHA+ Studies) confirming that for large volume vessels, the time taken to reach 1% hydrogen in air varies from tens of hours to several days with no credit taken from active ventilation systems.	2	1. Radiolytic hygrogen fire / explosion : 2. Cotamination spread through the cell.	2	2

Fault Schedule: Entrained Solids Removal

(Sheet 5)

Study Area/Keyword: External Dose Hazard

Event Identifier	Initiating Event	Safeguards	Frequency	Hazard Consequence	Worker Consequence	Public Consequence
1/0	1. Maintenance activities. 2. Activity challenge to shielding. 3. Activity to cooling water. 4. Liquid in vessel vent. 5. Hot liquid back to V1102; potential for increased corrosion. 6. Feed variation. 7. Failure of heat-exchanger E1101. 8. Mis-routing of fluid to standby circuit. 9. Ultrafilter blocked. 10. Backflow of activity into service areas. 11. Overconcentration of entrained solids and subsequent transfer. 12. Solids plug in transfer line (downstream of breakpot) to T1104.	1. Closed-circuit cooling (via coil) water system with collection and monitoring facilities. - separate from cooling towers; cooling is required to ensure that precipitation does not occur later. 2. Adequate valve and isolation arrangements. 3. Pressure differential sensing reveals blockage. 4. Pulsed backwash available. 5. Two banks of Ultrafilters - one operational, other standby. 6. Provision of a pressure break to ensure that activity cannot backflow from a pressurised system. 7. Line shielded and in-cell. 8.Shielding calculation performed on worst-cae (Envelope B) material. 9. Solids build-up in ultrafilter not likely to present a challenge to shielding. 10. T1104 is two tanks (same external volume). 11. Ultrafiltration circuit system operational pressure 5barg reduced for potential for gross leakage. 12. Most activity is in liquor as opposed to solids.	2	1. Dose uptake to Workers / Public. 2. Potential for solids deposition due to increased heat load in ultrafiltration loop.	2	1

Fault Schedule: Entrained Solids Removal

(Sheet 6)

Study Area/Keyword: Internal Dose Hazard

Event Identifier	Initiating Event	Safeguards	Frequency	Hazard Consequence	Worker Consequence	Public Consequence
1/5	1. Maintenance activities. 2. Overfilling of vessel scenario. 3. Migration of activity into inactive feed lines (steam and water). 4. Activity in sample bulge. 5. Blockage in sample system. 6. Chronic build-up of material in the ultrafiltration loop.	1. All inactive feed lines to the process will be valved and / or luted. 2. Barometric heads. 3. Air bleed into steam line to prevent vacuum forming when steam switched off. 4. Steam cabinets can be treated as suspect active. 5. Sample systems may be shielded bulges / gloveboxes. 6. Sampling may be an automatic process.	3	1. Increased Internal Dose due to Maintenance operations.	2	1

Study Area/Keyword: Loss of Air Hazard

Event Identifier	Initiating Event	Safeguards	Frequency	Hazard Consequence	Worker Consequence	Public Consequence
1/19	1. Leak or plug. 2. Loss of agitation. 3. Loss of air - inability to supply backwash pot.	Refer to loss of power.	3	1. None Identified at this time	1	1

Fault Schedule: Entrained Solids Removal

(Sheet 7)

Study Area/Keyword: Loss of Containment Hazard

Event Identifier	Initiating Event	Safeguards	Frequency	Hazard Consequence	Worker Consequence	Public Consequence
1/8	1. Maintenance activities leading to activity release to operators and operating areas. 2. Liquor leak from lines / vessels. 3. Process liquor leak into cooling water from cooler E1101.	1. Decontamination facilities - wash down. etc,. 2. Closed circuit system. Radiation monitoring and delay storage. 3. In-cell detection capability.1. Bunded area will take contents of the largest vessel. 2. Cell, bulge cladded. 3. Sump at low point with leak detection & liquor recovery. 4. Cell caters for potential spray leak.5. Safe operating procedures. 6. Disposal routes for non-maintainable items. 7. System and inactive areas interfacing to process e.g. inactive feed lines, will be treated as suspect active for hands-on maintenance purposes. 8. Liquor recovery. 9. There is no challenge to bulk shielding.	2	1. None Identified at this time	2	1

Fault Schedule: Entrained Solids Removal

(Sheet 8)

Study Area/Keyword: Loss of Power Hazard

Event Identifier	Initiating Event	Safeguards	Frequency	Hazard Consequence	Worker Consequence	Public Consequence
1/45	1. Loss of Agitation. 2. Loss of Grid, Distribution Board / 3. Substation etc,. 4. Pump stops. 5. Build-up of solids in transfer line. 5. Ultrafiltration loop stops. 6. Resuspension and re-entrainment of solids.	1. In-feed valves will close so that no material can pass from DST. 2. Control of in-feeds resides with the facility (Assumption). 3. Solids are resuspended for recovery. 4. Complete flushing operation.	3	1. Potential solids carry-over to vessel T1103. 2. Potential operability problem concerning restart.	1	1

Study Area/Keyword: Loss of Process Chemicals Hazard

Event Identifier	Initiating Event	Safeguards	Frequency	Hazard Consequence	Worker Consequence	Public Consequence
1/20	1. Failure of control system. 2. Failure to add process chemical before proceeding to next step. 3. Failure unrevealed since control system assumes addition had occurred. 4. Washing sequences interrupted.	1. Instrumentation on process chemical supplies.	3	1. Throughput adversely affected.	1	1

Fault Schedule: Entrained Solids Removal

(Sheet 9)

Study Area/Keyword: Loss of Services Hazard

Event Identifier	Initiating Event	Safeguards	Frequency	Hazard Consequence	Worker Consequence	Public Consequence
1/76	None Identified	1. None Identified at this time	3	1. Transfer could stop due to an erroneous disable or other fault conditions at the DoE. 2. Operability problem.	1	1

Study Area/Keyword: Loss of Water Hazard

Event Identifier	Initiating Event	Safeguards	Frequency	Hazard Consequence	Worker Consequence	Public Consequence
1/18	1. Leak or plug in cooling water. 2. Radiolytic hydrogen generation. 3. Insufficient cooling to tank(s). 4 .Unable to wash lines (operability problem).	1. Potential for the build-up of radiolytic hydrogen to explosive concentrations to be prevented, i.e. using passive protection (e.g. a deterministic approach involving provision of vessel vent with appropriate sizing / configuration such that LEL cannot be reached with credit not taken for active ventilation systems). 2. Potential for significant radiolytic hydrogen production is low (reference: calculations performed by D. Vickers action at Hanford TWRS-P PHA+ Studies) confirming that for large volume vessels, the time taken to reach 1% hydrogen in air varies from tens of hours to several days with no credit taken from active ventilation systems.	3	1. Radiolytic hygrogen fire / explosion :	2	2

Fault Schedule: Entrained Solids Removal

(Sheet 10)

Study Area/Keyword: Occupational Safety Hazard

Event Identifier	Initiating Event	Safeguards	Frequency	Hazard Consequence	Worker Consequence	Public Consequence
1/28	1. Service feeds operations. Handling of : NaOH, Fe(NO3)3, Sr(NO3)2 Refer to Outcell Distribution PFDs and Interaction Matrix.	1. Correct handling of process reagents. 2. PPE.	4		1	1

Study Area/Keyword: Shielding Hazard

Event Identifier	Initiating Event	Safeguards	Frequency	Hazard Consequence	Worker Consequence	Public Consequence
1/6	1. Through-wall penetrations for access to the ultrafiltration loop.	1. Joggle boxes (no straight path) for penetrations / maintenance purposes.	2	1. Potential for external dose to workers / public.	1	1

Fault Schedule: Entrained Solids Removal

(Sheet 11)

Study Area/Keyword: Ventilation - Challenge due to Heat Rejection, Spray Leakage and Overpressurisation Hazard

Event Identifier	Initiating Event	Safeguards	Frequency	Hazard Consequence	Worker Consequence	Public Consequence
1/9	1. Spray leak - airborne / aerosol activity. 2. Heat generation in vessel : acid present in alkaline vessel - inadvertant mixing of process and backwash liquors. 3. Pressurisation of steam system, refer to LAW feed evaporator. 3. Reduction in pH value due to addition of acid.	1. Cell wash-down if required. 2. Vent system will be sized to accommodate jet-pump air ejector exhaust.	3	1. Challenge to ventilation system. 2. Potential for increased dose uptake to workers. 3. Potential for an operability problem.	1	1

5.2.4 HLW Feed Receipt and Pretreatment System

The HLW Feed Receipt and Pretreatment section receives Envelope D feeds from the Hanford site operator and strontium/TRU Precipitates from the LAW Stream.

From bulk storage, these feeds are blended in batches sufficient to provide a one-day supply of feed to the HLW Melter. The feeds are then dewatered, using ultrafiltration to reduce the quantity of water being fed to the melter. Permeate from the ultrafiltration cycle is buffered and routed to the LAW Feed Evaporator.

HLW Feed Receipt

Envelope D feeds are received into the TWRS-P Facility in one of three Envelope D Receipt Vessels (V4101 A/B/C). These vessels will receive batches of Envelope D feed containing 5 Mt (5.5 tons) of equivalent waste oxide (excluding sodium and silicon). These vessels each have a maximum working volume of 225 m^3 (59.5 kgal) and are provided with cooling coils to maintain the temperature of the contents. On receipt of a batch of feed, the contents of V4101 A/B/C are sampled to determine the waste oxide concentration as well as other waste properties.

From vessels V4101 A/B/C Envelope D feed is delivered to the HLW ultrafiltration feed vessel (V4102) in batches by an RFD.

The size of the batch is determined by the waste oxide concentration and provides a one-day supply of feed to the HLW Melter. V4102 is sized to accommodate the largest batch size expected (69 m^3 [18.2 kgal]) and is provided with cooling coils to maintain the temperature of the contents.

The strontium and TRU precipitates are received into the strontium/TRU Precipitate Vessel (V4103) during processing of LAW Envelope C feed. This vessel has a maximum working capacity of 225 m^3 (59.5 kgal) and is provided with cooling coils to maintain the temperature of the contents. The strontium and TRU precipitate is fed to the HLW feed blending vessel (V4107A/B) in batches by an RFD (P4102A/B or P4104A/B) where it is blended with a batch of dewatered Envelope D feed.

Vessel V4101C also receives any recycled HLW from other parts of the process. These feeds are routed via breakpot V4105.

HLW Feed Pretreatment

The HLW pretreatment section consists of an ultrafiltration cycle, used to dewater the Envelope D feeds. The Envelope D feeds are delivered to V4102 by an RFD from one of the Envelope D receipt vessels. From V4102, the feed is circulated through one of two ultra filtration loops by one of the HLW ultrafiltration feed pumps (P4101 A/B).

Ultrafiltration is performed by a single ultra filter module (G4101 A/B). After passing through the ultrafilter, the circulating stream is passed through a water-cooled concentric pipe heat exchanger (E4101 A/B) to maintain the stream temperature at 25 °C, and then it is returned to V4102. The ultrafiltration feed pumps, ultrafilters and shell-and-tube heat exchanger are sized to accommodate an ultrafiltration cycle time of 18 hours. The two ultrafilter circuits will operate on a duty-standby basis.

Permeate from the ultrafilter is collected in the HLW ultrafiltration permeate collection vessel (V4104). Vessel (69 m^3) V4104 has the same capacity as vessel V4102 (69 m^3), thus providing sufficient capacity to hold the entire contents of V4102 in the event of ultrafilter failure. Vessel V4104 is provided with cooling coils to maintain the temperature of the contents at less than 25 °C. Permeate is discharged from V4104 by an RFD at the end of the ultrafiltration cycle to one of the LAW Feed evaporator feed vessels (V2101/V2102).

At the end of the ultrafiltration cycle, the dewatered HLW feed is transferred to one of two HLW Feed Blending Vessels (V4107A/B) by an RFD (P4114A/B and P4113A/B).

The utility requirements for the HLW feed receipt and pretreatment system are:

1) Cooling Water supply/return
2) Process air
   vessel ventilation
   vessel sampling systems
   instrument air
   high pressure steam
   plant wash systems

Permeate Backwash

In ultrafiltration the slurry flows through a hollow tube of filter media resulting in an increase in the solids concentration in the slurry as the result of the liquid passing through the filter media. With use the filtration rate may be reduced because of the filter media becoming “blinded” with solids. In this situation, a reversed, pulsed flow of clean liquid is used to purge solids blinding the filter media. A pulse pot (V1106 A, B, C, or D) containing 50 L (13.2 gal) is connected to 10 bar_g plant air supply and a pulsed flow is created by switching the valve on and off in the line connecting the pulse pot to the filter.

Nitric Acid Backwash

Nitric acid backwash is only initiated when the ultrafilter has been blinded to an extent that the permeate rate is limiting the capacity of the plant. The following precautions must be taken to avoid excessive temperature rise in the ultrafilter circuit. Because the feed to the ultrafilter is caustic, there could be a significant reaction with the nitric acid. The processing of the batch of feed must be completed and the vessel V1102A or V1102B emptied. A flush of the ultrafiltration loops initiated using 5 m^3 (1321 gal) of process water to the tank. Then the pulse pot is filled with water and a second water flush is initiated. Finally, nitric acid is introduced into the pulse pot and the recirculation loop is changed to dissolve material fouling the ultrafilter tube.

5.2.4.1 HLW Feed Receipt and Pretreatment System Study Areas and Hazard Evaluation Team

The operation and activities designated as study areas are:

1) Envelope C strontium/TRU precipitate receipt
2) Envelope D receipt
3) Envelope D concentration by ultrafiltration and strontium/TRU blending
4) Blending tank with cesium and technetium input
5) Permeate collection and discharge

The PFD for this review was O/PR/4100.

The hazard evaluation team members and respective disciplines are listed as follows:

J. Kisalu – Safety, Team Leader
D. Vickers – Process
H. Williams – Mechanical
G. Jones – Safety, Scribe
L. Marquis – Process
S. Warburton – Radiation and Shielding
N. Bailey – Mechanical
I. Roberts – Control and Instrumentation

5.2.4.2 HLW Feed Receipt and Pretreatment System Fault Schedules

Fault Schedule: HLW Melter Feed Receipt And Pretreatment (Sheet 1)

Study Area/Keyword: Corrosion / Erosion Hazard

Event Identifier	Initiating Event	Safeguards	Frequency	Hazard Consequence	Worker Consequence	Public Consequence
1614666/132	1. Solids erosion.	1. RFD's designed to withstand solids erosion. 2. Activity breakthrough and flow monitoring.1. Materials and Temperatures optimised for feed composition (eg for high chloride content temperatures would be limited to ambient) and for erosive potential of ligand resin.	3	1. Potential for leakage - maybe outcell.	2	1

Study Area/Keyword: Criticality Hazard

Event Identifier	Initiating Event	Safeguards	Frequency	Hazard Consequence	Worker Consequence	Public Consequence
1614666/117	1. Out of spec. material from DOE. 2. No dedicated means of returning envelope D.	1. Internal wash rings provided which can dilute and ensure lower concentration of forward feed (operability problem). 2. Concentration of TRU in feed likely to be small. 3. Criticality report (A. Jenkins, NRS) has indicated that there is no potential for such an incident in TWRS-P waste feeds. 4. All operations are located in-cell. 5. Criticality controls at source (DOE).	1	1. Build-up of TRU in feed tanks. 2. Potential for criticality - low.	1	1

Fault Schedule: HLW Melter Feed Receipt And Pretreatment (Sheet 2)

Study Area/Keyword: Decontamination Hazard

Event Identifier	Initiating Event	Safeguards	Frequency	Hazard Consequence	Worker Consequence	Public Consequence
1614666/126	1. Activity accumulation.	1. Wash rings provided to flush vessel at end of plant life. 2. Flushing facilities provided where required.eg valves and pumps.	4	1. Potential for increased dose uptake to workers / maintainers.	1	1

Study Area/Keyword: Dropped Load / Impact Hazard

Event Identifier	Initiating Event	Safeguards	Frequency	Hazard Consequence	Worker Consequence	Public Consequence
1614666/159	1. Crane, grab, mini-manipulator, cable or block failure. 2. Two blocking - load reaches end of travel (load hits pulley block). 3. Movement over disallowed areas. 4. Interlock / control failure. 5. Lifting device overloaded / snagged.	1. Interlocks can be fitted to disallow certain crane movements. 2. Cell design will avoid protrusions over travel route. 3. High integrity (High reliability and fire resistant) control and interlocking. 4. Ventilation system isolated if fire / smoke detected.	2	1. Consequence limited by release being within cell.	1	1

Fault Schedule: HLW Melter Feed Receipt And Pretreatment

(Sheet 3)

Study Area/Keyword: Explosion / Overpressure Hazard

Event Identifier	Initiating Event	Safeguards	Frequency	Hazard Consequence	Worker Consequence	Public Consequence
1614666/123	None Identified	1. Air feed small compared to process vessel size. 2. Vent system design ensures low concentration of hydrogen in cell. 3. Lines designed to withstand pressure surges. 4. Pump discharge valve closing and filter backwash etc.	2	1. Overpressure of air pulse jet and blockage of vent system.	1	1

Study Area/Keyword: External Dose Hazard

Event Identifier	Initiating Event	Safeguards	Frequency	Hazard Consequence	Worker Consequence	Public Consequence
1614666/114	1. Activity breakthrough.	1. Standard instrumentation (level, temp, density) in vessels provided. 2. Ultrafilters can be removed from cells - top access. 3. Valves and pumps located in bulges for maintenance access. 4. Located in shielded cells.	2	1. Dose uptake to Workers / Public.	2	1

Fault Schedule: HLW Melter Feed Receipt And Pretreatment

(Sheet 4)

Study Area/Keyword: Fire Hazard

Event Identifier	Initiating Event	Safeguards	Frequency	Hazard Consequence	Worker Consequence	Public Consequence

Fault Schedule: HLW Melter Feed Receipt And Pretreatment

(Sheet 5)

1614666/122	1. Pump motor major failure (ceased, motor internal electrical fault, fault in mechanical linkage, electrical or mechanical overload). 2. Hydrogen ignition.	1. Fire load in this area is restricted 2. Chosen pump will maintain duty cycle and expected mechanical loadings, therefore not overloaded and present insignificant risk during normal operation, pump casing fire resistant. 3. Low temperature (50 deg C) operation. Aqueous liquor - no combustibles etc. No solvent. 4. No runaway reactions identified. 5. Pumps segregated in bulges for maintenance purposes. 6. Potential for the build-up of radiolytic hydrogen to explosive concentrations to be prevented, i.e. using passive protection (e.g. a deterministic approach involving provision of vessel vent with appropriate sizing / configuration such that LEL cannot be reached with credit not taken for active ventilation systems). 7. Potential for significant radiolytic hydrogen production is low (reference: calculations performed by D. Vickers action at Hanford TWRS-P PHA+ Studies) confirming that for large volume vessels, the time taken to reach 1% hydrogen in air varies from tens of hours to several days with no credit taken from active ventilation systems. 8. Fire and smoke detection systems are fitted in the area. 9. Overload and overcurrent protection fitted to all electrical equipment. 10. Radiolytic hydrogen generation rate is low.	3	1. Radiolytic hygrogen fire / explosion :	2	2

Fault Schedule: HLW Melter Feed Receipt And Pretreatment

(Sheet 6)

		11. There is adequate dilution of hydrogen in this area. 12. Preventative maintenance and overhaul programme for all pumps and other electrical equipment. 13. Good housekeeping to maintain fire loading in the vicinity as low as possible.				

Study Area/Keyword: Internal Dose Hazard

Event Identifier	Initiating Event	Safeguards	Frequency	Hazard Consequence	Worker Consequence	Public Consequence
1614666/115	None Identified	1. Manual load of sample bottle and automatic fill within ventilated cabinet. 2. Equipment all located in cell.	4	1. Increased Internal Dose to Workers / Public.	1	1

Study Area/Keyword: Loss of Air Hazard

Event Identifier	Initiating Event	Safeguards	Frequency	Hazard Consequence	Worker Consequence	Public Consequence
1614666/130	1. Loss of process or instrument air.	1. Bottle back-up of supplies. 2. Ultrafilter circuits flushed with chemicals (nitric acid/water). 3. Agitators are designed to re-start with full settlement of solids. 4. System designed to be able to recover from settled process vessels.	3	1. Loss of agitation, cooling and transfer capability - leading to settlement - throughput issue (may need to agitate for extended period to ensure homogeneous product). 2. Operability problem - process stopped.	1	1

Fault Schedule: HLW Melter Feed Receipt And Pretreatment

(Sheet 7)

Study Area/Keyword: Loss of Containment Hazard

Event Identifier	Initiating Event	Safeguards	Frequency	Hazard Consequence	Worker Consequence	Public Consequence
1614666/118	1. Breaks in transfer line and internal process lines.	1. Stainless steel vessels. 2. Lines sloped to enable gravity drain of DOE transfer line. 3. Steel lined cells with drain sumps and ejectors. 4. Internal process lines contained as for vessels. 5. Interlock (hardwire) to prevent DOE pumping. 6. Vessel sized to accomodate transfer line volume including flushing. 7. Improved design minimises occurence of failure rate, therefore maintenance requirements and potential dose uptake to maintenance personnel. 8. Delta -p measurement detects failure. 9. Permeate can be routed back to receipt vessel.	2	1. Potential for outcell loss of liquor. Potential for increased dose uptake to workers.	2	1
1614666/144	1. Ultrafilter failure.	1. Ultrafilter failure will be detected by a change in system parameters (differential pressure, flowrate). 2. Ultrafilter cartridge is stainless steel ; more robust design.	2	1. Ultrafilter failure results in sludge in permeate collection vessel. Batch re-work required. 2. Leakage of liquor to permeate collection vessel - process upset.	2	1

Fault Schedule: HLW Melter Feed Receipt And Pretreatment

(Sheet 8)

Study Area/Keyword: Loss of Power Hazard

Event Identifier	Initiating Event	Safeguards	Frequency	Hazard Consequence	Worker Consequence	Public Consequence
1614666/128	1. Loss of power.	1. High integrity power supplies will be provided maintain a safe state. 2. Agitators are designed to re-start with full settlement of solids. 3. System designed to be able to recover from settled process vessels.	3	1. Loss of agitation, cooling and transfer capability - leading to settlement - throughput issue (may need to agitate for extended period to ensure homogeneous product). 2. Operability problem - process stopped.	1	1

Study Area/Keyword: Loss of Water Hazard

Event Identifier	Initiating Event	Safeguards	Frequency	Hazard Consequence	Worker Consequence	Public Consequence
1614666/129	1. Loss of water - loss of cooling.	1. Back-up water supplies are available. 2. There is an extended time lag between loss of cooling and vessel boiling.	3	1. Operability problem - process stopped. 2. Increased challenge to ventilation system due to rise in temperature in HLW vessel contents.	2	2

Fault Schedule: HLW Melter Feed Receipt And Pretreatment

(Sheet 9)

Study Area/Keyword: Ventilation - Elimination of Hydrogen, Splashing and Spray Challenge Hazard

Event Identifier	Initiating Event	Safeguards	Frequency	Hazard Consequence	Worker Consequence	Public Consequence
1614666/121	1. Splashing and spray to ventilation system. 2. Hydrogen generation.	1. Pulse jets to agitate tank contents to prevent splashing. 2. Provision of suitable ventilation system to prevent build-up of hydrogen pockets.	2	1. Challenge to ventilation system.	2	2

5.2.5 Cesium Removal Using Ion Exchange

The ion exchange system selected for the removal of cesium from LAW uses four ion exchange columns, operating as two sets of two columns in parallel. This process description covers the system shown in PFD 2200.

Process Description

The cesium ion exchange system comprises the following main process components: four identical ion exchange columns for cesium removal, a LAW feed vessel, a pretreated LAW solution collection vessel, and transfer pumps for treated LAW. Other equipment includes a makeup vessel and transfer RFD for regeneration caustic; a makeup vessel and transfer RFDs for caustic rinse; a collection vessel and transfer RFDs for the used caustic rinse; a breakpot for the supply of nitric acid, caustic, and demineralized water; and an ejector and breakpot for recycling the ion exchange product that is off-specification.

Loading Cycle

The LAW feed to the cesium ion exchange system is at a maximum concentration of 5M sodium. Feed to the ion exchange columns should be at about 25 °C (77 °F) to ensure efficient operation of the ion exchange system. The ion exchange resin selected for the cesium removal stage is SuperLigand – SL644, manufactured by IBC Advanced Technologies.

One pair of ion exchange columns are in the loading cycle while the lead column of the other pair is in the elution/regeneration mode.

The set of ion exchange columns in the loading cycle (C2201 and C2202) receive a feed of LAW that has had entrained solids removed and has been conditioned to 5M sodium. Either column in the set of two can act as the lead column because they are identical and completely interchangeable. Each ion exchange column holds ~1.0 m^3 (275 gallons) of ion exchange material.

The LAW is fed to the lead column in the set of two (C2201) from the LAW feed tank V2204 using pump P2204. It then passes through the lag column (C2202) before being collected in the treated LAW vessel, V2205 (65.6 m^3 [17.31 kgal]). The LAW feed flows upwards through the columns. From vessel V2205 the treated LAW is pumped forward to the technetium ion exchange columns for further radionuclide removal. If not enough cesium is removed, the LAW can be recycled back to the LAW feed vessel V2204 using ejector W2205 via breakpot V2207.

The concentration of cesium in the LAW feed is monitored at the outlet of each set of columns. When cesium can be detected in excess of process control limits in the effluent from the columns, the loading cycle in that set of columns is suspended. Cesium loading is then transferred to the second set of columns (C2203 and C2204).

Column Rinse

Residual feed, remaining in the lead column after loading is suspended, is removed using a solution of 0.5M NaOH (caustic rinse). This solution is made up in the caustic rinse vessel V2202 (5.24 m^3 [1390 gal]). The caustic rinse is transferred by an RFD (P2202A/B) to a breakpot (V2206) above the ion exchange columns. From the breakpoint, the caustic rinse drains by gravity through the columns and is collected in the caustic rinse collection vessel V2203 (5.24 m^3 [1390 gal], from where it is recycled (P2203A/B) to the LAW evaporator feed vessels. The caustic rinse removes precipitable cations (such as aluminum) from the column, thus preventing precipitation during column elution.

Residual caustic is displaced from the lead column using demineralized water. Residual caustic is removed from the column to prevent an exothermic reaction occurring with the nitric acid used for column elution. An exothermic reaction in the column could damage the ion exchange resin. Demineralized water is transferred to breakpot V2206, from where it drains by gravity through the ion exchange column. The water rinse is collected in the vessel V2207 for recycle to the LAW evaporator feed vessels.

Column Elution

Cesium is eluted from the ion exchange column using 0.5M nitric acid. Acid is supplied to the ion exchange columns by an RFD (P2304A/B) via a breakpot (V2206). The concentration of cesium in the acid eluate is monitored in a common line from all four columns. Elution is continued until cesium is no longer detected in the column effluent. The acid eluate is sent to collection vessels (V2301A/B) before further processing to recover the concentrated cesium product. The nitric acid is also recovered for reuse as eluant.

The nitric acid used for elution is monitored for cesium content as the recovered acid may contain traces of cesium from the recovery operation.

Eluate Rinse

Residual nitric acid is rinsed from the column using demineralized water, supplied via breakpot V2206. Nitric acid must be flushed from the column prior to regeneration to prevent an exothermic reaction with the sodium hydroxide solution used for regeneration. The water rinse is added to the eluant stream as it may contain appreciable amounts of cesium.

Column Regeneration

The ion exchange column is regenerated (converted to the sodium form ready for reuse) using 0.5M and 2M caustic. First, 0.5M caustic is transferred from the caustic rinse tank (V2202), through breakpot V2206, and through the column, before being returned to the caustic rinse tank for reuse (in the column rinse cycle). Then 2M caustic is transferred from the caustic regeneration tank (V2202), via breakpot V2206, through the ion exchange column, and returned to the tank for reuse. The column is now ready for use.

The newly regenerated ion exchange column is used as the lag column in the next loading cycle and the column that was previously the lag column (and has not been regenerated) is used as the lead.

Reagent Makeup

The sodium hydroxide solution used for rinsing and regeneration is made up in the feed tanks V2201 and V2202.

The 2M caustic used for regeneration and the 0.5M caustic used for rinsing are made up using 5M caustic and demineralized water. Caustic is supplied to the plant at 19M concentration. The 5 M caustic is used for makeup to ensure that the caustic concentration in the rinse tank cannot exceed the concentration of caustic in the feed.

Services Required

Chilled water is required for cooling the four ion exchange columns. Cooling of the ion exchange columns is only required if the cesium loaded onto the resin is not to be eluted directly after the loading cycle is complete. For ease of control, the cooling water is kept circulating continuously. Radioactivity monitors are provided on the chilled water return lines.

Process air is required for the operation of actuated valves, RFDs, and pulse jet mixers. A pulse jet mixer is a common fluidics device used in BNFL facilities for mixing. The device has no moving parts and is highly reliable. The device consists of an RFD fabricated within a tube that is inserted into the vessel. In operation, an air ejector connected to the RFD draws the fluid from the tank into the tube, then the flow of motive air to the jet is isolated, causing the fluid in the tube to re-enter the tank. The air-to-air ejector is cycled on and off mixing the tanks contents as solution is “pulsed” from the tube with the RFD to the tank. A single tank may have a number of pulse jets installed.

Electrical power is required for the operation of pumps and valves.

5.2.5.1 Cesium Removal Using Ion Exchange Study Areas and Hazard Evaluation Team

The Cesium Removal PFD, O/PR/2200, was reviewed for deviation from normal operations in the following areas:

1) Loading cycle
2) Residual feed removal with caustic
3) Caustic removal with demineralized water
4) Cesium elution with 0.5M nitric acid
5) Demineralized water rinse
6) Regeneration with 0.5M and 2M caustic
7) Removing spent resin
8) Replacement of resin

The following hazard evaluation team studied cesium removal. The hazard evaluation team members and respective disciplines are listed as follows:

J. Kisalu – Safety, Team Leader
S. Jones – Safety, Scribe
S. Warburton – Radiation and Shielding
D. Vickers – Process
J. Ingram – Process
S. Amin – Research and Development
A. Jenkins – Radiation and Shielding
M. Johnson – Technical Manager
A. Tighe – Control and Instrumentation
N. Bailey – Mechanical

5.2.5.2 Cesium Removal Using Ion Exchange Fault Schedules

Fault Schedule: Cs Removal using Ion Exchange

(Sheet 1)

Study Area/Keyword: Corrosion / Erosion Hazard

Event Identifier	Initiating Event	Safeguards	Frequency	Hazard Consequence	Worker Consequence	Public Consequence
2200/24	1. Degradation of resin or breach in IX column screen mesh. 2. Corrosion caused caustic / acid wash. 3. Corrosion by 8M Nitric Acid.	1. Materials selected to minimise corrosion/erosion - a materials study is ongoing. 2. Cs breakthrough is monitored - revealed event. 3. Trips and alarms - process halted.	3	1. Solids breakthrough (i.e. ligand) can produce erosive particles which could affect pump (see action under maintainability). 2. Increased radiation levels in pump and piping due to breakthrough.	2	1

Study Area/Keyword: Criticality Hazard

Event Identifier	Initiating Event	Safeguards	Frequency	Hazard Consequence	Worker Consequence	Public Consequence
1614664/116	1. Build-up of TRU in Ion Exchange Columns.	1. Ion exchange columns can be flushed out with water. 3. Concentration of TRU in feed likely to be small. 4. Criticality report (A. Jenkins, NRS) has indicated that there is no potential for such an incident in TWRS-P waste feeds. 5. All operations are located in-cell.	1	1. Potential for criticality.	1	1

Fault Schedule: Cs Removal using Ion Exchange

(Sheet 2)

Study Area/Keyword: Decontamination Hazard

Event Identifier	Initiating Event	Safeguards	Frequency	Hazard Consequence	Worker Consequence	Public Consequence
2200/16	1. Activity accumulation in cell. 2. Plate-out of Cs, Tc in circuit anticipated.	1. Flushing of lutes and wash rings provided in-cell. 2.Process can be flushed with DMW. 3.Resin removal capability - can be flushed from columns. 4. No collection traps - as high a proportion of vertical pipework as possible. 5. Mimimum pipework bend radii. 6. Man access not required. 7. Pipes rinsed with DMW following acid wash. 8. Wash down facilities available.	4	1. Increased activity due to plate out of Cs and Tc - decontamination more difficult.	1	1

Fault Schedule: Cs Removal using Ion Exchange

(Sheet 3)

Study Area/Keyword: Domino (Other Effects) Hazard

Event Identifier	Initiating Event	Safeguards	Frequency	Hazard Consequence	Worker Consequence	Public Consequence
2200/25	1. Resin degradation or breach in IX screen mesh. 2. Caustic and acid mixing. 3. Misrouting of caustic from upstream.	1. Instrumentation provided to detect deterioration in product quality. 2. See action relating to adequate Process Control. 3. In-cell.	3	1. Caesium break-through affecting product quality. 2. Resin release from column which could cause downstream problems (Operability problem). 3. Excess of Cs would lead to LAW container being outside limits. 4. Cs breakthrough resulting in potential for increased dose uptake for workers and public. 5. Potential for increased dose to workers.	2	2

Study Area/Keyword: Dropped Load / Impact Hazard

Event Identifier	Initiating Event	Safeguards	Frequency	Hazard Consequence	Worker Consequence	Public Consequence
2200/28	1. Removal of agitator. (A separate study of provisions e.g. cranes, MSM's, will be required).	1. Maintainable items are placed in bulges, etc,.	3	1. Item under maintenance falls. 2. Potential release of activity.	1	1

Fault Schedule: Cs Removal using Ion Exchange

(Sheet 4)

Study Area/Keyword: Effluent / Washing Hazard

Event Identifier	Initiating Event	Safeguards	Frequency	Hazard Consequence	Worker Consequence	Public Consequence
2200/42	1. Control faults or loss of reagent.	2. Provision for DMW washing of lines and equipment.	3	1. Incomplete washing. 2. Operability problem.	1	1

Study Area/Keyword: Explosion / Overpressure Hazard

Event Identifier	Initiating Event	Safeguards	Frequency	Hazard Consequence	Worker Consequence	Public Consequence
2200/13	1. Degradation of resin. 2. Resin discharge line blockage (more likely with resin overuse).	1. Performance of resin monitored for each cylce of use. 2. Resin discharge line is likely to be relatively large diameter 3. Washing with DMW will not degrade ligand. 4. Regular changes of resin before degradation occurs.	2	1. High pressures in column due to degradation of resin - gasses produced : hydrogen,oxygen, CO_2 etc. 2. Possible explosive overpressurisation leading to cotamination spread through the cell.	2	2

Fault Schedule: Cs Removal using Ion Exchange

(Sheet 5)

Study Area/Keyword: External Dose Hazard

Event Identifier	Initiating Event	Safeguards	Frequency	Hazard Consequence	Worker Consequence	Public Consequence
2200/0	1. Some Cs will always be present. (line is not monitored). 2. Maloperation - spent resin removed before removal of Cs. 3. Sumps and valves require maintenance (detail design). 4. Cs plate-out on lines / equipment. 5. Solids fed forward results in reduced ionex efficiency and may increase activity levels (see 2100/21). Potential for product to be out of specification.	1. All operations are in-cell, handling operations by MSMs. 2. Gamma monitors on nitric acid inlet line to detect recirculation of Cs. 3. Shielding takes account of Cs plate-out on pipeline, pump and other equipment.	2	1. Dose uptake to Workers / Public.	2	2

Fault Schedule: Cs Removal using Ion Exchange

(Sheet 6)

Study Area/Keyword: Extreme Weather Hazard

Event Identifier	Initiating Event	Safeguards	Frequency	Hazard Consequence	Worker Consequence	Public Consequence
2200/136	1. High rainfall, flooding, snow. 2. Low temperature. 3. Temperature fluctuations during spells of extreme weather.	1. Storage of resin will ensure operation through bad weather conditions - replacement only required every 10 cycles per IX column (approx 2 m3 per week).	3	1. No hazard consequence identifed - facility assumed to cater for prevalent weather conditions.	1	1

Fault Schedule: Cs Removal using Ion Exchange

(Sheet 7)

Study Area/Keyword: Fire Hazard

Event Identifier	Initiating Event	Safeguards	Frequency	Hazard Consequence	Worker Consequence	Public Consequence

Fault Schedule: Cs Removal using Ion Exchange

(Sheet 8)

2200/12	1. Radioltytic decomposition or resin degradation - ignition of hydrogen evolved.	1. Temperature and pressure instruments on column. 2. Potential for the build-up of radiolytic hydrogen to explosive concentrations to be prevented, i.e. using passive protection (e.g. a deterministic approach involving provision of vessel vent with appropriate sizing / configuration such that LEL cannot be reached with credit not taken for active ventilation systems). 3. Total in-cell fire loading is reduced to a minimum. 4. Ventilation system isolated when fire or smoke detected.5. Potential for significant radiolytic hydrogen production is low (reference: calculations performed by D. Vickers action at Hanford TWRS-P PHA+ Studies) confirming that for large volume vessels, the time taken to reach 1% hydrogen in air varies from tens of hours to several days with no credit taken from active ventilation systems. 6. Cs removal ion exchange columns are colled by water jacket due to the higher levels of activity compared with that present in the Tc ion exchange columns. The latter columns are not fitted with a water jacket. 7. The ion exchange columns are in-cell. 8. There will be sufficient fire supression to cope with the expected fire loading. 9. This may be a water sprinkler or gas (e.g. halon) automatic fire extinguisher	3	1. Radiolytic hygrogen fire / explosion : (radiolytic and chemical decomposition of superligand resin) generated within Cs and Tc ion exchange columns contacts ignition source, for example electric arc, hot surface or adverse chemical interaction. 2. The ventilation system contains filtration that may become blocked by combustion products. Similarly, cell drainage may become blocked. Filters may be breached by fire. 3. A fire in the Cs cell will have greater consequences than that of a similar event in the Tc cell, due to the lower activity loading. Resin is organic and potentially combustible. 4. Cs may become volatile in the fire, due to high temperatures reached. Potential for Cs to pass through filters under these conditions. 5. Fire may cause filter breakthrough.	3	3

Fault Schedule: Cs Removal using Ion Exchange

(Sheet 9)

system.
10. A Caustic/Acid mixing reaction is exothermic - but is very unlikely to cause ignition.
11. Regular changes of resin before degradation occurs.
12. Columns can be rinsed with water in the event of extreme temperature excursions.
13. DMW Rinse in between acid and caustic wash.

Study Area/Keyword: Loss of Air Hazard

Event Identifier	Initiating Event	Safeguards	Frequency	Hazard Consequence	Worker Consequence	Public Consequence
2200/22	1. Loss of instument/process air	1. Valves fail safe in predetermined positions. See action 2200/1/18	2	1. None Identified at this time	1	1

Fault Schedule: Cs Removal using Ion Exchange

(Sheet 10)

Study Area/Keyword: Loss of Containment Hazard

Event Identifier	Initiating Event	Safeguards	Frequency	Hazard Consequence	Worker Consequence	Public Consequence
2200/7	1. Screen breach or breakdown of resin. 2. Control failure or fault in regeneration process. 3. Valve maloperation or blockage	1. Leakage will be to cell sump leakage contained. 2. Pressure drop monitoring will detect and indicate problem. 3. Alarms to monitor high and low pressure drops. 4. Lined cell with sump and leak detection. 5. Level measurement on collection vessel will indicate gross leak. 6. Double isolation to prevent contaminated back-flow. 7. DMW break tank included which limits volume of DMW available.	2	1. Leak of effluent from valves etc. 2. Leaks from cooling jacket. 3. Leak resulting in increased dose potential to workers and public.	2	2

Study Area/Keyword: Loss of Power Hazard

Event Identifier	Initiating Event	Safeguards	Frequency	Hazard Consequence	Worker Consequence	Public Consequence
2200/110	1. Loss of power - pumps stop.	1. Backup power supplies may be available. 2. Sufficient capacity in DMW head tank to complete wash. 3. Valves fail safe in predetermined position. drain columns and terminate feed. 4. Any untreated feed can be recycled for rework.	2	1. Ability to wash is lost. 2. Process stops - leads to potential blockage due to resin settlement in discharge lines. 3. Pressurisation of column due to loss of cooling.	1	1

Fault Schedule: Cs Removal using Ion Exchange

(Sheet 11)

Study Area/Keyword: Loss of Process Chemicals Hazard

Event Identifier	Initiating Event	Safeguards	Frequency	Hazard Consequence	Worker Consequence	Public Consequence
2200/41	1. Loss of caustic	1. Level instrumentation is provided.	2	1. Process stops. 2. Operability problem (see plant area 1, operability)	1	1

Study Area/Keyword: Loss of Water Hazard

Event Identifier	Initiating Event	Safeguards	Frequency	Hazard Consequence	Worker Consequence	Public Consequence
2200/19	1. Loss of cooling water system.	1. Backup water supply may be available. 2. Sufficient capacity in DMW head tank to complete wash. 3. Valves fail safe in predetermined position. drain columns and terminate feed. 4. Any untreated feed can be recycled for rework.	2	1. Process stops - leads to potential blockage due to resin settlement in discharge lines. 2. Overheating of IX column if cooling with resultant steam generation. 3. Pressurisation of column due to loss of cooling.	1	1

Fault Schedule: Cs Removal using Ion Exchange

(Sheet 12)

Study Area/Keyword: Occupational Safety Hazard

Event Identifier	Initiating Event	Safeguards	Frequency	Hazard Consequence	Worker Consequence	Public Consequence
2200/29	1. Resin is skin irritant - direct manual handling not possible.	1. All operations (except maintenance) in cell. 2. Standard provisions - no special problems. 3. Normal statutory provisions for DMW pump and lines.	3	1. No hazard identified.	2	1

Study Area/Keyword: Shielding Hazard

Event Identifier	Initiating Event	Safeguards	Frequency	Hazard Consequence	Worker Consequence	Public Consequence
2200/74	None Identified	1. Shielding of gamma monitors.	1	1. Potential for external dose to workers / public.	1	2

Fault Schedule: Cs Removal using Ion Exchange

(Sheet 13)

Study Area/Keyword: Ventilation - Generation and Elimination of Steam and Hydrogen Hazard

Event Identifier	Initiating Event	Safeguards	Frequency	Hazard Consequence	Worker Consequence	Public Consequence
2200/11	1. Inadvertant mixing of caustic and acid. 2. Hydrogen in vessel vent system from degradation of resin. 3. Mixing generates heat producing steam release to vent system	1. Regular changes of resin before degradation occurs. 2. Performance of resin monitored for each cylce of use. 3. Interlocks to prevent inadvertant mixing of caustic and acid. 4. Vessel vented to vessel vent system. 6. Small quantities of material are involved. 7. Process terminated and manual recovery initiated following event.	3	1. Potential to pressurise columns - migration of airborne activity - increased challenge to ventilation system and increased dose to Workers. 2. Potential for hydrogen fire.	2	2

5.2.6 Cesium Recovery as a Solid

Storing cesium as a dry powder is the requirement of Contract Specification 4.2.2 for the LAW-only option (DOE 1996). BNFL has identified adsorbing cesium onto an ion exchange material, crystalline silico-titanate (CST) as a suitable material for producing the cesium solid.

Cylindrical (33 cm by 137 cm [13 in. by 54 in.]) stainless steel canisters are to contain the cesium absorbed onto the CSI.

Neutralization

The cesium is removed from the feed using ion exchange (PFD 2200, i.e., O/BE/1614 659) and eluted with nitric acid. The nitric acid is recovered and the cesium is concentrated in an evaporator (PFD 2300, i.e., O/BE/1614 663). For the LAW/HLW option, the cesium solution is sent directly to storage (PFD 2500).

For the LAW-only option (PFD 2400, i.e., O/BE/1614 662), after concentrating to a 600-L (160-gal) solution, the cesium concentrate from the nitric acid recovery evaporator is fed into the neutralization vessel V2401 (1.5 m^3 [400 gal]) via breakpot, V2402. The liquor is agitated using a pulse air mixer.

The well-mixed cesium concentrate is sampled remotely for nitric acid concentration in order to calculate the addition of sodium hydroxide required to neutralize the acid. A wash line flushes the sample line to prevent blockage with cesium nitrate. The liquor is neutralized to maximize CST capacity for cesium. The resulting liquor is basic, like the LAW feed; therefore, the waste from CST ion exchange is recycled back to the evaporator.

The temperature of the liquor in the vessel is measured to monitor the reaction and the flow of caustic to the vessel is automatically stopped if the temperature exceeds 50 °C (120 °F). The vessel contents are cooled by a supply of chilled water to a cooling coil (with installed spare coil). There are emergency connections for a supply of cooling from a different water source. Alternatively, the contents can be cooled directly with the demineralized water supply. Radiation indicators on the chilled water and demineralized water returns monitor backflow.

Ion Exchange

For the LAW-only option, this neutralized stream is fed by gravity control to the ion exchange column, C2401 (consists of 10 columns in series) via a reverse-flow diverter, P2401A/B and surge pot V2403 which is 10 m (33 ft) above the ion exchange columns. A reverse-flow diverter acts as fluid diode permitting flow in one direction, but not in the reverse direction. The ion exchange column is 27.3 cm diameter by 113.6 cm height, and constructed Schedule 40 seamless stainless steel pipe which contains a bed of CST. Crystalline silico-titanate is a nonregenerable inorganic powder (20 to 40 mesh size) that has a very high affinity for cesium in acidic or alkaline media. This ion exchange column is highly reliable because of the absence of moving parts. Each column of CST can hold up to 6.0E3 TB (1.63 E5 curies) of Cesium-137.

The quick-release couplings on ion exchange column C2401 pipelines are tested by flushing the lines with demineralized water before feeding with the process stream. Trays below the canisters collect spills. A level indicator on the trays will detect the leaks. The feed trickles through the column of CST, and the cesium is adsorbed. The sodium potassium and other minor constituents, present in the solution flow through the column and are collected in vessel V2404 for recycle to the LAW feed evaporator, vessels V2101/V2102 (PFD 2100, i.e., O/BE/1614 658).

A cesium detector between the seventh and eighth container monitors the extent of cesium adsorption. A radiation monitor is required on the first canister, C2401A, to prevent exceeding the radioactivity limit (1.0E5 rad/hr) of the Contract Specification 4.2.2. During startup, optimum loading and control of CST should be monitored because if the specified radioactivity limits are exceeded in the first canister, the succeeding canisters will not be fully loaded (in volume). The possibility of overloading the canisters with regard to radioactivity limits, can be designed out by reducing the amount (volume) of CST filled in each canister.

When the CST is saturated with cesium, demineralized water is fed through the column to flush out the remaining residual feed solution. The flushing liquid is collected in vessel V2404 (1.5 m^3) and then sent to one of the LAW Feed Evaporator feed tanks, V2101/V2102. The heat output is 0.8 kW per container, satisfying the heat load criteria of <1.5 kW per container.

Canister Packaging, Handling and Storage

The cesium loaded CST column is dried by using its own heat generation and by the circulation of 70 C (158 °F) air at 6.7-kg/h (14.8-lb/h) flowrate through the bed. A side stream of the drying air is bypassed through an analyzer to monitor its moisture content. When the moisture content is sufficiently low, the canisters are overpacked in containers of 32.3 cm Schedule 80s, stainless steel pipe. A lid is welded onto the outer container and the container is leak tested. Overpacked containers are sent to canister storage for 60 day storage and return to the DOE.

Remote handling equipment is used to disconnect the individual CST columns. The fully loaded columns (A-G) are removed. The remaining 3 columns (H-J) then become the first three (A-C) for the next batch of feed and 7 new columns are connected (D-J). Handling by crane movement is limited to prevent the canisters from being dropped onto the neutralization vessel V2401 or the collection vessel V2404. A seal on the outer container prevents release of contamination from the inner canister.

5.2.6.1 Cesium Recovery as a Solid Study Areas and Hazard Evaluation Team

It was noted in the pre-meeting that the PFD 2200 of this process can be broken down into two process steps, neutralization and adsorption of the cesium on ion exchange loaded containers. The ion-exchange-loaded containers are placed in a container overpack by remote handling mechanism. The PFD was considered as one study area.

The hazard evaluation team members and respective disciplines are listed as follows:

G. Sutherland -Safety, Team Leader
V. Richards – Process
D. Hughes – Process
M. Page – Project Management
S. Warburton – Project Management
D. Vickers – Process
A. Tighe – Control and Instrumentation
B. Williams – Mechanical
G. Jones – Safety, Scribe
A. Jeaps – Research and Development
M. Johnson – Technical Manager

Fault Schedule: Cs Recovery as a Solid

(Sheet 1)

Study Area/Keyword: Corrosion / Erosion Hazard

Event Identifier	Initiating Event	Safeguards	Frequency	Hazard Consequence	Worker Consequence	Public Consequence
1614662/131	1. Corrosion caused by Process eluate Nitric Acid or 8M Caustic (in Neutralisation Vessel V2401).	1. Materials selected to minimise corrosion/erosion (materials study ongoing). 2. Redundant cooling coils. 3. Vessels and feed lines are flushed with demineralised water.	3	1. Potential loss of containment of Caesium Feed and Nitric eulate. 2. Activity breakthrough into cooling water. Spillage into cell.	1	1

Study Area/Keyword: Decontamination Hazard

Event Identifier	Initiating Event	Safeguards	Frequency	Hazard Consequence	Worker Consequence	Public Consequence
1614662/124	1. Spillage of solid Cs product during charge of container.	1. Inner and outer containers ensure that outer container will not need decontamination.	3	1. Increased surface contamination due to spillage, potential for increased dose uptake to workers.	1	1

Fault Schedule: Cs Recovery as a Solid

(Sheet 2)

Study Area/Keyword: Dropped Load / Impact Hazard

Event Identifier	Initiating Event	Safeguards	Frequency	Hazard Consequence	Worker Consequence	Public Consequence
1614662/136	1. Crane, grab, mini-manipulator, cable or block failure. 2. Two blocking - load reaches end of travel (load hits pulley block). 3. Movement over disallowed areas. 4. Interlock / control failure. 5. Lifting device overloaded / snagged.	1. Special outer over Cs container may be required (container is 12 mm thick). 2. Interlocks fitted to disallow unsafe crane movements (appropriate controls on crane movement). 3. Cell design avoids protrusions over travel route. 4. High integrity (High reliability and fire resistant) control and interlocking. 5. All movements are in-cell. 6. High integrity cannister design. 7. Accident / emergency procedures. 8. Ventilation dampers close following incident - vent system is also isolated if fire / smoke detected. 9. Safe working practices. 10. Minimum lift height.	2	1. Canister dropped - potential for Cs powder release (Cs powder highly active). 2. Distortion leading to inner container not fitting within outer container leading to incorrect fit and subsequent loss of containment.	2	2

Study Area/Keyword: Explosion / Overpressure Hazard

Event Identifier	Initiating Event	Safeguards	Frequency	Hazard Consequence	Worker Consequence	Public Consequence
1614662/121	1. Traces of water left in canister, leading to pressurisation of cannister. 2. Potential for radiolysis.	1. Canisters allowed to steam-off before seal welding. 2. Checks will be made on water content on drying gas (air).	3	1. Steam causes overpressurisation of cannister following lid welding. 2. Contamination spread through the cell.	2	2

Fault Schedule: Cs Recovery as a Solid

(Sheet 3)

Study Area/Keyword: External Dose Hazard

Event Identifier	Initiating Event	Safeguards	Frequency	Hazard Consequence	Worker Consequence	Public Consequence
1614662/1	1. Leakage from couplings (10 off). 2. Maintenance operations. (Location in cell makes it difficult for access and maintenance).	1. Shielded bulges for maintainable equipment. 2. Bulges located to prevent back flow. 3. Options for valves and instrumentation include location in shielded bulges or remote caves. 4. Couplings are tested with water prior to operation.	2	1. Dose uptake to Workers / Public. 2. Liquor leakage into cell or into cooling coils. 3. Potential for cross contamination of cooling and demin water.	2	1

Study Area/Keyword: Loss of Air Hazard

Event Identifier	Initiating Event	Safeguards	Frequency	Hazard Consequence	Worker Consequence	Public Consequence
1614662/128	1. Loss of Air.	1. Back up of instrument air. 2. Feeds to tank tripped on loss of air to agitator	2	1. Agitation stops.	1	1

Study Area/Keyword: Loss of Containment Hazard

Event Identifier	Initiating Event	Safeguards	Frequency	Hazard Consequence	Worker Consequence	Public Consequence
1614662/118	1. Sample pot blockage and resultant overfill causes spilage.	1. High integrity vessel. 2. Steel cladded cell with sump and leak detection. 3. Hydraulic design will prevent overflow.	2	1. None Identified at this time	1	1

Fault Schedule: Cs Recovery as a Solid

(Sheet 4)

Study Area/Keyword: Loss of Power Hazard

Event Identifier	Initiating Event	Safeguards	Frequency	Hazard Consequence	Worker Consequence	Public Consequence
1614662/126	1. Loss of Power.	1. Flush through with water from a header tank. 2. Valves backed from high integrity supply (battery backed).	3	1. Loss of RFD and liquor stationary resulting in overheating and boiling of liquor. Potential carry-over of activity into vessel vent system.	1	1

Study Area/Keyword: Ventilation - Vessel Vent system Challenge Hazard

Event Identifier	Initiating Event	Safeguards	Frequency	Hazard Consequence	Worker Consequence	Public Consequence
1614662/119	1. Overflow of V2401 to vessel vent system.	1. Interlocks on high level.	3	1. Challenge to ventilation system. Potential for increased activity arisings from system.	2	2

5.2.7 Technetium Removal Using Ion Exchange

This process description covers the system shown in PFD 2600. The ion exchange system selected for the removal of technetium from LAW uses four ion exchange columns, operating as two sets of two columns in parallel.

Process Description

The main process components of the technetium ion exchange system are: four identical ion exchange columns for technetium removal; three treated LAW collection vessels; and two transfer pumps. Other equipment includes a makeup vessel and transfer RFD for regeneration caustic; a collection vessel and recycle vessel for the used caustic rinse; a breakpot for the supply of nitric acid, caustic and demineralized water; and ejectors and a breakpot for the recycling of treated LAW that is off-specification.

Loading Cycle

The LAW feed to the technetium ion exchange system is at a maximum concentration of 5M sodium. Feed to the technetium ion exchange columns should be at approximately 25 °C (77 °F) to ensure efficient operation of the ion exchange system. The resin selected for the technetium removal is the organic vinylpyridine-based resin, Reillex-HPQ. However, an alternative ion exchange material, SuperLig 639 is being considered for separating technetium from the LAW solutions.

One pair of ion exchange columns is in the loading cycle while the lead column of the other pair is in elution/regeneration mode. The set of ion exchange columns in the loading cycle (C2601 & C2602) receive LAW feed that has had the entrained solids and cesium removed. In the set of two columns either column can act as the lead column because they are identical and completely interchangeable. Each ion exchange column holds approximately 1.0 m^3 (37 ft^3) of ion exchange material.

LAW is fed to the lead column in the set of two (C2601), and then passes through the lag column (C2602) before being collected in one of the three treated-LAW vessels, V2603A/B/C (63 m^3), where it is sampled before being forwarded to the LAW melter evaporator to be concentrated to 10M sodium. If the sampling shows that the LAW feed is not within the technetium specification for feeding to the LAW melter evaporator, it is returned to vessel V2205 for recycle through the ion exchange columns using ejectors (W2604A/B/C). The LAW feed flows upward through the columns.

The concentration of technetium in the treated LAW is monitored at the outlet of each set of columns. When technetium can be detected in excess of process control limits in the effluent from the columns during the column loading cycle, the loading operation is suspended. Technetium loading is then transferred to the second set of columns (C2603 & C2604).

Column Rinse

Residual feed, remaining in the lead column after loading is suspended, is removed using a rinse solution of 0.5M caustic. This solution is made up in the caustic rinse vessel tank V2601 (5.24 m^3) and is transferred to breakpot V2604 by RFDs (P2601 A & B). From the breakpot, caustic drains by gravity through the column. Caustic removes precipitable cations, such as aluminum, from the column to prevent precipitation during column elution. The caustic rinse is collected in the caustic rinse collection vessel V2602 (5.24 m^3), recycled by RFDs (P2602 A/B) to the LAW feed evaporator vessels via vessel V9308. One CV of caustic rinse is used for removing residual feed from the ion exchange column.

Residual caustic is displaced from the lead column using demineralized water. Caustic needs to be removed from the column in order to prevent an exothermic reaction occurring with the nitric acid used for column elution. An exothermic reaction in the column could damage the ion exchange resin. Demineralized water is supplied via breakpot V2604. The water rinse is added to the caustic rinse tank V2602 for recycling to the LAW evaporator feed vessels.

Column Elution

Technetium is eluted from the ion exchange column using 8.0M nitric acid. Nitric acid is supplied to the ion exchange column by an RFD via breakpot (V2604). The concentration of technetium in the acid eluate is monitored in a common line from all four columns. The elution is continued until technetium is no longer detected in the column effluent. The acid eluate is sent to a collection vessel (V2701A/B) before further processing to recover the concentrated technetium product. Elution is conducted downflow through the column.

Eluate Rinse

Residual nitric acid is rinsed from the column using demineralized water. Nitric acid must be flushed from the column prior to it being used in the loading cycle to prevent an exothermic reaction occurring with the LAW feed. The first CV of water rinse is added to the eluant stream as it may contain appreciable amounts of technetium, the second CV is added to the treated LAW tanks. The eluate rinse is conducted downflow through the column.

Column Regeneration

After the nitric acid has been rinsed from the column, 0.5M NaOH is flushed through the column to prevent precipitation of aluminum when the LAW feed is reintroduced. The newly eluted ion exchange column is used as the lag column in the next loading cycle and the column that was previously the lag column (and has not been eluted) is used as the lead.

5.2.7.1 Technetium Removal Using Ion Exchange Study Areas and Hazard Evaluation Team

The records of the hazard evaluation study of the cesium ion exchange process that preceded the hazard evaluation meeting on technetium removal by ion exchange were available for comparison purposes. Using the previous ion exchange study as reference, the hazard evaluation team identified differences in the two ion exchange processes. These differences were the focus of the review. The elution both of cesium and technetium are by the addition of nitric acid solutions. Therefore, the elution and nitric acid concentration steps for both processes were addressed. Process Flow Diagram 1614664 (PFD 2600) was reviewed and the areas of study were the loading cycle; and the neutralization, caustic addition, resin removal, elution, and column regeneration.

The hazard evaluation team members and respective disciplines are listed as follows:

J. Kisalu – Safety, Team Leader
D. Vickers – Process
G. Sutherland – Safety, Scribe
B. Williams – Mechanical
S. Warburton – Radiation and Shielding
J. Ingram – Process
A. Tighe – Control and Instrumentation
S. Amin – Research and Development

5.2.7.2 Technetium Removal Using Ion Exchange Fault Schedules

(Sheet 1)

Fault Schedule: Tc Removal using Ion Exchange

Study Area/Keyword: Criticality Hazard

Event Identifier	Initiating Event	Safeguards	Frequency	Hazard Consequence	Worker Consequence	Public Consequence
1614664/116	1. Build-up of TRU in Ion Exchange Columns.	1. Ion exchange columns can be flushed out with water. 3. Concentration of TRU in feed likely to be small. 4. Criticality report (A. Jenkins, NRS) has indicated that there is no potential for such an incident in TWRS-P waste feeds. 5. All operations are located in-cell.	1	1. Potential for criticality.	1	1

Study Area/Keyword: Domino (Other Effects) Hazard

Event Identifier	Initiating Event	Safeguards	Frequency	Hazard Consequence	Worker Consequence	Public Consequence
1614664/128	1. Breakthrough affecting product quality (refer to Cs removal HE study).	1. Sampling on product tanks. 2. Three tanks each to take one complete loading cycle (three days hold-up). 3. Cs monitors following Ion Echange column. 4. Cs unlikely to breakthrough, due to action of downstream systems.	3	1. Product quality will be affected (to a lesser extent than with Cs) in the event of Tc breakthrough.	1	1

Fault Schedule: Tc Removal using Ion Exchange

(Sheet 2)

Study Area/Keyword: Explosion / Overpressure Hazard

Event Identifier	Initiating Event	Safeguards	Frequency	Hazard Consequence	Worker Consequence	Public Consequence
1614664/120	1. Breakthrough of steam into vessles.	1. System designed to cope with steam breakthrough. 2. Interlocking of steam supply to shut-off following incident. 3. Pumps provide discharge path only - overpressurisation is not possible. 4. Tank collapse not possible - vessels are connected to vessel vent system.	2	1. Explosion in vessels due to breakthrough of steam. Potential for increase in dose to workers.	2	2

Study Area/Keyword: External Dose Hazard

Event Identifier	Initiating Event	Safeguards	Frequency	Hazard Consequence	Worker Consequence	Public Consequence
1614664/1	1. Cs / Tc in Nitric Acid feed.	1. Locate in separate cell froom Cs removal ionex columns. 2. Nitric Acid is sampled for presence of Cs and Tc in the Nitric Acid Recovery System (Tc is a Soft Beta (as opposed to Cs - a Hard Gamma) emitter). 3. Shielding design takes into account feed line between cells. 4. Resin degradation due to radiation not as significant for Tc compared with Cs. Chemical degradation is likely to be significant - elution by 8M Nitric verses 0.5M for Cs.	3	1. Dose uptake to Workers / Public.	2	1

Fault Schedule: Tc Removal using Ion Exchange

(Sheet 3)

Study Area/Keyword: Extreme Weather Hazard

Event Identifier	Initiating Event	Safeguards	Frequency	Hazard Consequence	Worker Consequence	Public Consequence
1614664/129	1. High rainfall, flooding, snow. 2. Low temperature. 3. Temperature fluctuations during spells of extreme weather.	1. Thermally well insulated transfer line - due to presence of shielding/incell. 2. Protection due to building envelope.	3	1. Feed temperature variation	1	1

Study Area/Keyword: Loss of Any Service Hazard

Event Identifier	Initiating Event	Safeguards	Frequency	Hazard Consequence	Worker Consequence	Public Consequence
1614664/125	1. Power, air or steam is lost.	1. Valves will fail to a safe state. 2. Indication of services status provided to operations staff. 3. Pipework layout facilitates resin flow.	2	1. Process will stop in the event of any loss of service. 2. Resin resident in pipes if process stops (e.g. during resin removal). Loss of throughput - operability issue.	1	1

Fault Schedule: Tc Removal using Ion Exchange

(Sheet 4)

Study Area/Keyword: Loss of Containment Hazard

Event Identifier	Initiating Event	Safeguards	Frequency	Hazard Consequence	Worker Consequence	Public Consequence
1614664/117	1. Pipe, vessel or containment rupture. 2. Radiolytic hydrogen generation / ignition.	1. Steel lined cell with sump to collect leaks. 2. Level detection in sump. 3. Solids traps to prevent resin excaping into circuit due to screen breech. 4. No cooling water in this system - reduced potential for containment integrity loss. 5. A periodic inspection regime will be instigated (see 3200/114). 6. Potential for the build-up of radiolytic hydrogen to explosive concentrations to be prevented, i.e. using passive protection (e.g. a deterministic approach involving provision of vessel vent with appropriate sizing / configuration such that LEL cannot be reached with credit not taken for active ventilation systems). 7. Potential for significant radiolytic hydrogen production is low (reference: calculations performed by D. Vickers action at Hanford TWRS-P PHA+ Studies) confirming that for large volume vessels, the time taken to reach 1% hydrogen in air varies from tens of hours to several days with no credit taken from active ventilation systems.	2	1. Radiolytic hygrogen fire / explosion :	3	3

(Sheet 5)

Fault Schedule: Tc Removal using Ion Exchange

Study Area/Keyword: Occupational Safety Hazard

Event Identifier	Initiating Event	Safeguards	Frequency	Hazard Consequence	Worker Consequence	Public Consequence
1614664/153	1. Personnel present during plant maintenance.	1. There are no personnel in this area during normal operation. 2. There are no routine in-cell manual handling operations.	4	1. Potential for enhanced dose uptake to plant maintainers.	1	1

Study Area/Keyword: Shielding Hazard

Event Identifier	Initiating Event	Safeguards	Frequency	Hazard Consequence	Worker Consequence	Public Consequence
1614664/115	1. Shielding compromised.	1. Shielding will cope with Cs breakthrough. 2. Shorter cycling regimes are anticipated if no suitable instrumentation becomes available (review of instrumentation is ongoing - no suitable proprietary detector is available at present).	1	1. Potential for external dose to workers / public.	1	1

Fault Schedule: Tc Removal using Ion Exchange

(Sheet 6)

Study Area/Keyword: Ventilation - Generation of Aerosols Hazard

Event Identifier	Initiating Event	Safeguards	Frequency	Hazard Consequence	Worker Consequence	Public Consequence
1614664/118	1. Hydrogen in vessel vent system from degradation of resin. 2. Generation of aerosols from movement of acid. 3. Inadvertant mixing of caustic and acid. 4. Mixing generates heat producing steam release to vent system.	1. Volume of H2 in vent system is kept small (review of ventilation requirements is ongoing to ensure that H2 levels remain below 1% volume (25% of LFL)). 2. Design of ventilation system (provision of demister pad, etc) prevents droplets entering vent system.	2	1. Challenge to ventilation system - possible enhanced corrosion due to interaction of fine particulate / acid aerosol with ventilation .system	2	2

5.2.8 Cesium and Technetium Nitric Acid Recovery System

The purpose of the cesium and technetium nitric acid recovery evaporators is to reduce the volume of the cesium- and technetium-rich eluate stream from the ion exchange process and to recover as much of the nitric acid as possible from these stream for reuse.

Plant Description

Eluate is delivered from the ion exchange process in periodic batches. Cesium eluate is received in one of two feed vessels V2301 A/B. The technetium is received in feed vessel 2701A/B. Each batch is sampled to determine the acid concentration and cesium and technetium content prior to feeding to the evaporator. As received from ion exchange, the eluate liquor is more dilute than the 0.5M nitric acid concentration (cesium) and the 8.0M nitric acid concentration (technetium) required for reuse. This is because some acid is consumed by reaction during the elution process and because some wash water is added to the eluate stream.

The cesium-nitric acid recovery evaporator (V2303) and the technetium-nitric acid recovery evaporator (V2703) are the jacketed-kettle type, with built-in deentrainment separator. Feed is supplied from a constant volume feeder (V2302 for cesium and V2702 for technetium) and enters the evaporator via a serpentine pipe that provides a liquid seal between the feed tank and the evaporator. The liquid in the seal loop isolates the high vacuum of the evaporator and prevents vacuum leaks and siphoning from occurring. The evaporator is heated by steam supplied to the vessel jacket. The upper part of the jacket is supplied with chilled water for concentrate cooling. Periodically the evaporator is shut down for removal of concentrate. The cesium concentrate and technetium concentrate are extracted from each evaporator by steam ejector via an outlet line with a seal loop.

The vapor leaving an evaporator kettle contains water plus nitric acid. The salts dissolved in the feed are nonvolatile and accumulate in the evaporator liquid holdup.

The concentration of the recovered acid is increased by passing the vapor stream into a rectifying column C2301, for the recovery of cesium-eluate nitric acid, and into C2701 for the recovery of technetium-eluate nitric acid. These columns operate with a relatively high reflux flow and the recovered acid is collected from the underflow, with a small water flow from the column overheads. Both columns are constructed with vapor inlet below the lower tray and the evaporator kettle in place of a reboiler.

The cesium and technetium acid-recovery column overhead primary condenser (E2301 and E2701, respectively) are water cooled by a hairpin-tube unit with condensation taking place on the shell side. The condenser shell incorporates a condensate sump that contains a weir arrangement to control the flow split between the reflux and the overhead product flows.

To reduce the boiling temperature of the nitric acid in the evaporator, the system is run at a reduced pressure of 0.1 bar. This is achieved using a two-stage steam ejector system. Exhaust vapors from the ejectors are condensed in a shell-and-tube after-condenser (E2302) prior to venting the exhausted gases to the vent scrubbing system. Process condensate from the after-condenser for cesium and drains to a breakpot.

Recovered acid flows by gravity from the bottom of the rectifying column to the cesium and technetium recovered acid buffer vessels (V2305 [0.43 m^3] and V2705 [0.46 m^3], respectively). From these tanks, nitric acid is transferred to the respective eluant vessel V2304A/B or V2704A/B (28 m^3). The recovered acid in these tanks is sampled and the concentration determined. The tank contents are cooled by in-tank coils.

Because some acid is consumed by reaction during the elution process, fresh acid must be added to the eluant tanks to bring the contents back to the original volume. Depending on the concentration of the recovered acid sample, some adjustment may be necessary. Fresh nitric acid at 12M is diluted with demineralized water in an agitated tank (V2306) which is located outside the cell. The diluted acid is then added to the cesium or technetium eluant vessels. The volume and dilution of this fresh acid is calculated from the volume and concentration of the recovered acid.

When an ion exchange column requires elution, acid from the respective cesium or technetium eluant vessel is passed through the column by an RFD transfer to a head tank then by gravity feed through the column and to the available eluate vessel.

Process Operation and Control

The concentration of nitric acid in the evaporator kettle is selected by referring to the vapor-liquid equilibrium data at the chosen operating pressure such that the vapor composition equals the nitric acid composition in the feed. On startup, the evaporator kettle must be charged with pure nitric acid at the required concentration. This fresh nitric acid is supplied to the evaporator using the same dilution vessel that supplies the eluate vessel V2306.

Every batch of eluate received is analyzed to determine the cesium or technetium content, total salt and the nitric acid concentration. This analysis allows the total inventory of cesium or technetium, total salt fed to the evaporator, and the reflux flow rate required to the rectifier to be calculated. The evaporator feed and evaporation rates can be calculated from the volume of the eluate batch.

The evaporation rate of the evaporator is held constant by controlling the mass flow rate of steam to the heating jacket. The feed flow rate to the evaporator is controlled automatically by varying the rotational speed of the constant volume feeder so as to maintain a constant liquid level in the evaporator kettle.

The vacuum in the evaporator system is controlled to a constant value by bleeding a small air flow into the suction line to the vacuum ejectors via a modulating control valve.

Reflux flow to the rectifier is controlled using a weir arrangement. Condensate collects in a sump built into the shell of the overhead condenser. Condensate can flow either to the reflux pot via a downcomer pipe that is maintained completely flooded, or over a notch weir arrangement and back to the rectifier.

Operation of the nitric acid recovery evaporator/rectifier system continues until either the total cesium inventory or the technetium in the evaporator kettle (calculated by adding together the analysis results for each batch transferred to the evaporator) reaches the maximum permitted, or until the total salt inventory in the evaporator reaches 80% of the solubility limit. The acid recovery evaporator is then shut down and the concentrate transferred to cesium powder processing (LAW-only option) or to vessel V2710 for the LAW/HLW option. The contents of the technetium acid recovery evaporator are transferred to the technetium concentrate storage vessel V2710

Effluents

Table 5-1 lists disposal route of the effluent streams that arise from the acid recovery process.

Table 5-1. Effluent Disposal

Stream Description	Disposal Route
Steam condensate from evaporator jacket	Boiler Condensate Return vessel V9305
Process condensate from rectifier overheads	Contaminated Process Condensate vessel V9308

Steam condensate is monitored continuously for radioactivity. Depending on the radioactivity detected, the stream may be discharged to either of the routes detailed above.

Table 5-2 lists the utility streams that have continuous radiation monitoring as they exit the process.

Table 5-2. Cooling and Chilled Water Discharge

Utility Streams that have Continuous Radiation Monitoring
Cooling water from overhead condenser E2301/E2701
Cooling water from aftercondenser E2302/E2702
Chilled water from vessel cooling coils V2304A/B andV2704A/B

5.2.8.1 Cesium and Technetium Nitric Acid Recovery System Study Areas and Hazard Evaluation Team

The basis for the study was PFD, O/PR/2300 (Cs Loaded Nitric Acid [Eluate from Ion Exchange] Evaporation/Recovery), for cesium eluate processing. The technetium eluate process PFD, O/PR/2700, (Tc Loaded Nitric Acid [Eluate from Ion Exchange] Evaporation/ Recovery) was referred to throughout the hazard evaluation study meeting for differences between the technetium process PFD and the basis for the hazard evaluation study, the cesium elution process operation. The areas of study for cesium and technetium elution are:

1) Nitric acid eluant addition to the ion exchange columns and ion exchange product recovery
2) Evaporation
3) Evaporation product handling

The hazard evaluation team members and respective disciplines are listed as follows:

R. Cullen – Safety, Team Leader
S. Amin – Research and Development
G. Jones – Safety, Scribe
R. Collins – Process
M. Johnson – Technical Manager
M. Page – Project Management
D. Vickers – Process
B. Williams – Mechanical
S. Warburton – Radiation and Shielding
A. Tighe – Control and Instrumentation

Fault Schedule: Cs And Tc Nitric Acid Recovery

(Sheet 1)

Study Area/Keyword: Corrosion / Erosion Hazard

Event Identifier	Initiating Event	Safeguards	Frequency	Hazard Consequence	Worker Consequence	Public Consequence
1614667/156	1. Loss of temperature control due to loss of vacuum. 2. Corrosion caused by recovery of acid. 3. Enhanced corrosion.	1. Materials selected to minimise corrosion/erosion. 2. Temperature and pressure indication and trips to identify/shutdown. 3. Vessel specification will reflect quality of internal fittings to ensure appropriate design life. 4. Evaporator temperature is maintained and controlled between 50 - 60 degC such that the corrosion rate is minimised.	3	1. Potential for leakage of process liquors to cell (slightly active). 2. Challenge to cell ventilation system.	1	1

Study Area/Keyword: Dropped Load / Impact Hazard

Event Identifier	Initiating Event	Safeguards	Frequency	Hazard Consequence	Worker Consequence	Public Consequence
1614667/133	1. Handling of process reagent drum.	1. Standard handling equipment. 2. Handling procedures.	3	1. Loss of containment of process reagent drum. 2. Loss of containment in equipment drum is dropped on (?).	2	1

Fault Schedule: Cs And Tc Nitric Acid Recovery

(Sheet 2)

Study Area/Keyword: Effluent / Washing Hazard

Event Identifier	Initiating Event	Safeguards	Frequency	Hazard Consequence	Worker Consequence	Public Consequence
1614667/127	1. Disposal route for effluent / washings.	1. All effluent can be re-routed (e.g. steam condensate) can be routed to ETF. 2. Recovery of spilled acid - recovery/disposal routes to be identified. 3. Washout ejectors can be routed to high level melter.	3	1. Potential for washings to be mis-routed.	2	1

Study Area/Keyword: Explosion / Overpressure Hazard

Event Identifier	Initiating Event	Safeguards	Frequency	Hazard Consequence	Worker Consequence	Public Consequence
1614667/120	1. Heat generated due to acid/water reaction. 2. Inadvertent transfer of IX resin during elution to evaporator. 3. Generation of hydrogen by radiolysis.	1. Cooling provided with temperature indication. 2. Vessel ventilation system.	2	1. Explosion due to thermal degradation of resin (or contact with strong acid in evaporator). Potential for release from cell. Potential for increased dose uptake to workers. 2. Cotamination spread through the cell. Potential for release from cell. Potential for increased dose uptake to workers.	2	2

Fault Schedule: Cs And Tc Nitric Acid Recovery

(Sheet 3)

Study Area/Keyword: External Dose Hazard

Event Identifier	Initiating Event	Safeguards	Frequency	Hazard Consequence	Worker Consequence	Public Consequence
1614667/1	1. Loss of lute due to pressurisation. 2. Activity leakage through CVF drive shaft. 3. Potential for activity backflow.	1. Multiple relief path and ventilation system. 2. System is valved off after transfer. 3. In-cell appropriately shielded. Drive shaft in shielded bulge. 4. Steam condensate to vessels V2307 and V2707 will be in seperate room in line with management of steam condensate in facility. 5. Feed serves both Caesium and Technitium eluate. 6. Lute filling and maintenance regime required. 7. For maintanance purposes this system is treated as suspect active.	2	1. Potential for dose uptake to Workers / Public.	2	2

Study Area/Keyword: Extreme Weather Hazard

Event Identifier	Initiating Event	Safeguards	Frequency	Hazard Consequence	Worker Consequence	Public Consequence
1614667/158	1. High rainfall, flooding, snow. 2. Low temperature. 3. Temperature fluctuations during spells of extreme weather.	1. Protection required will be provided by facility.1. Some heat output from Cs loaded concentrate (4 kw per 600 litres of material) may mitigate extreme low temperatures.	3	1. No hazard consequence identifed - facility assumed to cater for prevalent weather conditions.	1	1

Fault Schedule: Cs And Tc Nitric Acid Recovery

(Sheet 4)

Study Area/Keyword: Fire Hazard

Event Identifier	Initiating Event	Safeguards	Frequency	Hazard Consequence	Worker Consequence	Public Consequence
1614667/119	1. Ignition source present in area.	1. Combustables restricted in area. 2. Fire load in this area will be minimised. 3. Fire and smoke detection systems will be fitted in the area. 4. Acid spillages diluted and disposed of. 5. Good housekeeping practices and procedures.	2	1. Combustible materials in Cs and Tc Nitric Acid Recovery System contact an ignition source, for example electric arc, hot surface or adverse chemical interaction. 2. The ventilation system may become blanked by combustion products. Similarly, cell drainage may become blocked. Potential for release of contaminants. Potential for increased dose uptake to workers / public.	2	2

Fault Schedule: Cs And Tc Nitric Acid Recovery

(Sheet 5)

Study Area/Keyword: Internal Dose Hazard

Event Identifier	Initiating Event	Safeguards	Frequency	Hazard Consequence	Worker Consequence	Public Consequence
1614667/140	1. Maintainance operations.	1. Decontamination and washdown of bulges for maintenance required. 2. Gamma detection will indicate precence of Cs. 3. Provision within tank V2710 for emptying - route to be defined. 4. Active equipment in bulges. 5. Dose from Tc will be low (low energy beta). (Risk from Tc is considered to be internal rather than external dose).	4	1. Increased Internal Dose due to Maintenance operations.	1	1

Study Area/Keyword: Loss of Air Hazard

Event Identifier	Initiating Event	Safeguards	Frequency	Hazard Consequence	Worker Consequence	Public Consequence
1614667/154	1. Loss of air supply to agitator and RFDs.	1. Heat load from Tc vessel low.	3	1. RFD failure - cannot transfer - process stopped. 2. Loss of agitation - process is delayed.	1	1

(Sheet 6)

Fault Schedule: Cs And Tc Nitric Acid Recovery

Study Area/Keyword: Loss of Containment Hazard

Event Identifier	Initiating Event	Safeguards	Frequency	Hazard Consequence	Worker Consequence	Public Consequence
1614667/117	1. Line breach , valve leak , spillage etc. 2. Acid leak.	1. Pressurised feed isolated at feed end. 2. Bunded area around vessel. 3. Flange guards as provided required. 4. Cell sump with leak detection for bund. Interlocks to shut off pump and feed line. 5. CVF liquor level indication and overflow. 6. Use of compatible materials. 8. Disposal route available from bund.	2	1. Dose uptake to Workers / Public.	2	2

Study Area/Keyword: Loss of Power Hazard

Event Identifier	Initiating Event	Safeguards	Frequency	Hazard Consequence	Worker Consequence	Public Consequence
1614667/152	1. Loss of power to evaporator.	1. Control system shut down feed and steam. 2. Valves fail to safe state.	2	1. Process stops - operability problem.	1	1

Fault Schedule: Cs And Tc Nitric Acid Recovery

(Sheet 7)

Study Area/Keyword: Loss of Water Hazard

Event Identifier	Initiating Event	Safeguards	Frequency	Hazard Consequence	Worker Consequence	Public Consequence
1614667/153	1. Loss of cooling water.	1. Vent system to be Stainless Steel to cope with acid - material assessment ongoing. 2. Provision of scrubbing and filtration as appropriate. 3. Isolation valves fail shut on loss of supply. 4. The acid vapour is unlikely to be greater than 0.5 molar.	2	1. Loss of water causes process delay. 2. Enhanced activity to vent system from condenser failure. 3. Enhanced nitric acid vapour to vent system. 4. Radiolytic heat generation - loss of cooling to vessel V2710 with potential for Tc to become volatile and enter vessel vent system. Potential external dose hazard.	3	2

Study Area/Keyword: Occupational Safety Hazard

Event Identifier	Initiating Event	Safeguards	Frequency	Hazard Consequence	Worker Consequence	Public Consequence
1614667/135	1. Nitric Acid handling operations.	1. Provision of safety showers, eye baths, ventiation and safety procedures for acid.	3	1. Potential for contact with concentrated Nitric Acid.	3	1

Fault Schedule: Cs And Tc Nitric Acid Recovery

(Sheet 8)

Study Area/Keyword: Seismic Hazard

Event Identifier	Initiating Event	Safeguards	Frequency	Hazard Consequence	Worker Consequence	Public Consequence
1614667/131	1. Damage to Stock Tanks.	1. Bund sized for tank leakage. 2. Appropriate seismic hardening of building and SSCs as determined by the magnitude of any potential hazard.	2	1. Uncontolled feed from stock tank. Potential for process upset; potential for increased dose to Workers.	3	3

Study Area/Keyword: Shielding Hazard

Event Identifier	Initiating Event	Safeguards	Frequency	Hazard Consequence	Worker Consequence	Public Consequence
1614667/141	1. Maintainance operations.	1. Bulges will not routinely be accessible, they will be located in a controlled access room.	2	1. Potential for external dose to workers / public.	1	2

Study Area/Keyword: Ventilation - Overpressurisation Hazard

Event Identifier	Initiating Event	Safeguards	Frequency	Hazard Consequence	Worker Consequence	Public Consequence
1614667/118	1. Pressurisation of evaporator system.	1. Agitator sealed against fume release. 2. Vessels and cells vented. 3. Liquor will be prevented from entering ventialtion system. 4. Inactive feed systems will have dedicated ventilation system where required.	2	1. None Identified at this time	2	2

5.2.9 Cesium and Technetium Fresh Resin Addition

The two ion exchange resins in use, IBC Advanced Technologies SuperLig SL644 and Reilley Industries Reillex-HPQ, are disposed of after approximately 10 cycles (subject to further development work). Spent resin is removed from the column and replaced with fresh resin. If the resin is left in the column for too long it may start to deteriorate because of radiation and contact with acids and alkalis, block flow through the resin, and make the resin difficult to remove from the column.

Spent resin is removed from the ion exchange column by fluidizing the ion exchange resin and pumping it from the column as a slurry. Spent resin is collected in vessel V2901 (10.4 m^3). The fluidization solution is separated from the resin slurry using a hydrocyclone (vessel V2903) and collected in vessel V2902. The fluidized solution is re-used by pumping (P2901) to each ion exchange column. Excess solution is transferred (pump V2902) to the LAW feed evaporator vessels. Spent resin is sampled in vessel V2901 to determine radionuclide content. If radionuclide content is acceptable, the spent resin is pumped (P2903) to the LAW melter feed vessels V3220, V3222, or V3224. Fresh resin is transported to the column using water (or caustic). (See O/BE/1614669 and O/BE/1614670 for details of resin addition and recovery).

5.2.9.1 Cesium and Technetium Fresh Resin Addition Study Areas and Hazard Evaluation Team

There are two study areas; resin pre-treatment; and resin collection, separation and transfer of liquor and resin liquor. The reference PFD is 1614669. The resin is transferred to the LAW melter and the resin liquor is recycled.

The hazard evaluation team members and respective disciplines are listed as follows:

G. Sutherland – Team Leader
F. Shoffner – Services
J. Richardson – Mechanical
R. Barr – Observer
I. Roberts – System
J. Ingram – Process
M. Page – Process
B. Cullen – Safety
M. Johnson – Technical Manager

5.2.9.2 Cesium and Technetium Fresh Resin Addition Fault Schedules

Fault Schedule: Cs / Tc Fresh Resin Addition and Removal

(Sheet 1)

Study Area/Keyword: Corrosion / Erosion Hazard

Event Identifier	Initiating Event	Safeguards	Frequency	Hazard Consequence	Worker Consequence	Public Consequence
1614669/169	1. Erosion due to handling of slurries. 2. Erosion of hydro cyclone due to high velocity solids.	1. Compatability of materials. 2. Geometry of pipework (as vertical and as straight as possible).	3	1. Failure of hydro cyclone. 2. Leakage of pipework.	2	1

Study Area/Keyword: Decontamination Hazard

Event Identifier	Initiating Event	Safeguards	Frequency	Hazard Consequence	Worker Consequence	Public Consequence
1614669/162	1. Maintenance activities. 2. Inadvertant activity backflow (by diffusion). 3. Decontamination of hydro cyclone.	1. Compatable wash reagents will be used. 2. Ability to flush down to Process Vessels.	4	1. None Identified at this time	2	1

Fault Schedule: Cs / Tc Fresh Resin Addition and Removal

(Sheet 2)

Study Area/Keyword: Domino (Other Effects) Hazard

Event Identifier	Initiating Event	Safeguards	Frequency	Hazard Consequence	Worker Consequence	Public Consequence
1614669/170	1. Blockages, etc,. 2. Possible incorrect elution cycle following wrong ion exchange material in column. (See Loss of Services Process Chemicals).	1. Verification that ion exchange operation has been successful prior to elution cycle commencement.	3	1. Potential for Cs / Tc breakthrough. 2. Increased radiation / contamination.	2	1
1614669/197	1. High feed of resin to melter	1. None Identified at this time	3	1. Product quality issue : Out of spec melter chemistry.	1	1
1614669/199	1. Carry over of resin to V2902.	1. Strainer on outlet line.	3	1. None Identified at this time	1	
1614669/205	1. Feeding of spent resin to melter.	1. Test plan will ensure that this item is covered	4	1. Potential for toxic gases in off gas from melter.	1	1

Fault Schedule: Cs / Tc Fresh Resin Addition and Removal

(Sheet 3)

Study Area/Keyword: Dropped Load / Impact Hazard

Event Identifier	Initiating Event	Safeguards	Frequency	Hazard Consequence	Worker Consequence	Public Consequence
1614669/173	1. Dropped drum during routine handling operations. 2. Dropped pumps during maintenance activities.	1. Restricted height for load lifting. 2. Integrity of lifting gear. 3. Small pumps, limited lift heights. No breach of containment possible.	3	1. Spillage of material clean-up / recovery required - see loss of containment guideword. 2. Potential for damaging adjacent equipment. 3. Anticipated potential is limited.	2	1

Study Area/Keyword: Explosion / Overpressure Hazard

Event Identifier	Initiating Event	Safeguards	Frequency	Hazard Consequence	Worker Consequence	Public Consequence
1614669/184	1. Valve misalignment.	1. Valve sequence controls. 2. Sensitivity to Nitric Acid applies only to SL-644 (Cs exchange) resin.	3	1. Potential for overpressurisation.	2	1

Fault Schedule: Cs / Tc Fresh Resin Addition and Removal

(Sheet 4)

Study Area/Keyword: External Dose Hazard

Event Identifier	Initiating Event	Safeguards	Frequency	Hazard Consequence	Worker Consequence	Public Consequence
1614669/152	1. Backflow of activity - either by diffusion or pressurisation of column. 2. Shinepath - weakness in shielding.	1. Isolation valves, DCS control. 2. Position status of valves is returned. 3. Resin is added every 1 - 2 days; activity that may be present is flushed back into column. 4. Line is as vertical and as short as possible. 5. During maintenance, lines will be treated as suspect active. 6. Routine health physics surveys. 7. Valve control sequence ensures correct valve positions.	3	1. Increased radiation levels in inactive area.	1	2
1614669/177	1. Maintenance activity in bulges. 2. Sampling operations.	1. Appropriate decontamination and washdown procedures - wash down provisions will reduce potential for chronic build-up of activity. 2. Shielding and operator procedures for sampling. 3. Maintainable items (pumps,etc,.) are in bulges. 4. Sample system in appropriately shielded cabinet. 5. Eluted resin is likely to have low activity.	3	1. Radiation challenge to maintenance workers	1	1

Fault Schedule: Cs / Tc Fresh Resin Addition and Removal

(Sheet 5)

Study Area/Keyword: Extreme Weather Hazard

Event Identifier	Initiating Event	Safeguards	Frequency	Hazard Consequence	Worker Consequence	Public Consequence
1614669/171	1. High rainfall, flooding, snow. 2. Low temperature. 3. Temperature fluctuations during spells of extreme weather.	1. Protection required will be provided by facility.	3	1. Freezing of lines. 2. Ion exchange materials exposed to extremes of temperature.	1	1

Study Area/Keyword: Fire Hazard

Event Identifier	Initiating Event	Safeguards	Frequency	Hazard Consequence	Worker Consequence	Public Consequence
1614669/158	1. Suppliers' data indicates that the resin could sustain a fire. 2. Potential for a strong exothermic reaction - nitric acid / resin.	1. No ignition sources in this plant area. 2. Nitric acid will not be stored in the same bund area as resin - intention is segregation of reagents.	3	1. Fumes generation potential eminating from a fire involving resin.	3	1

Fault Schedule: Cs / Tc Fresh Resin Addition and Removal

(Sheet 6)

Study Area/Keyword: Internal Dose Hazard

Event Identifier	Initiating Event	Safeguards	Frequency	Hazard Consequence	Worker Consequence	Public Consequence
1614669/153	1. Spillage of active liquor due to the potential for activity backflow, either by diffusion or column pressurisation into the inactive resin make-up tanks.	1. Maintenance activities. 2. DMW supply for flushing is luted and valved.1. Lines is washed at the end of the transfer.	3	1. Increased Internal Dose to Workers and / or Public.	2	1

Study Area/Keyword: Loss of Air Hazard

Event Identifier	Initiating Event	Safeguards	Frequency	Hazard Consequence	Worker Consequence	Public Consequence
1614669/166	1. Valves cannot be operated. 2. Loss of air supply to agitator - insufficient agitation. 3. Transfer stopped.	1. None Identified at this time	3	1. Potential for blockage of discharge line.	1	1

Fault Schedule: Cs / Tc Fresh Resin Addition and Removal

(Sheet 7)

Study Area/Keyword: Loss of Containment Hazard

Event Identifier	Initiating Event	Safeguards	Frequency	Hazard Consequence	Worker Consequence	Public Consequence
1614669/156	1. Spilled liquor. 2. Overflow of liquor. 3. Failure of vessel. 4. Corrosion - Resin may be delivered ready slurried - 2M caustic. 5. Valve leakage. 6. Overfilling of vessel.	1. Vessels are bunded. 2. Spilled slurry can be recovered. 3. Spillages will be dealt with in accordance with Manufactures recommendations. 4. Access to drums is restricted operationally. 5. Interlocks on feed system. 6. Appropriate handling. 7. High liquor level trips and / or provision of an overflow facility from the V2801. 8. Vessels are large (5 m ^ 3) hence there is time before overfilling occurs. 9. A manual lifting and inverting platform will be provided to prevent loss of containment of resin.	2	1. Potential for contact with toxic materials. 2. Health detriment due to contact with spilled resins or reagents (e.g. NaOH).	3	1
1614669/181	1. Breaches in lines, vessels etc.	1. Standard in cell provisions include leak detection and ability to return to process.	2	1. Material loss to cell.	1	1

Fault Schedule: Cs / Tc Fresh Resin Addition and Removal

(Sheet 8)

Study Area/Keyword: Loss of Power Hazard

Event Identifier	Initiating Event	Safeguards	Frequency	Hazard Consequence	Worker Consequence	Public Consequence
1614669/164	1. Agitation loss. 2. Loss of flow (pump power loss) in melter feed line could lead to blockage	1. Valves will close during loss of power, hence, line plug may not occur.	3	1. Solids start to settle. If draining down line plug will occur. 2. Potential for line blockage.	1	1

Study Area/Keyword: Loss of Process Chemicals Hazard

Event Identifier	Initiating Event	Safeguards	Frequency	Hazard Consequence	Worker Consequence	Public Consequence
1614669/167	1. Incorrect chemical in barrell. 2. Incorrect resin to column (Different resins for Cs and Tc exchange). 3. If unable to precondition in tank, then able to precondition in column).	1. Appropriate packaging and/or labelling. 2. Operator training. 3. Monitoring of liquors from columns. 3. Ability to recycle liquor. 4. Testing of received materials for their ion exchange properties, as part of plant quality control. 5. Operator procedures (Possible difference in colour in resins may give positive indication of correct resin).	3	1. Cs and Tc not removed from waste liquor - product quality issue. 2. Cs and Tc breakthrough - possible worker impact.	2	1

Fault Schedule: Cs / Tc Fresh Resin Addition and Removal

(Sheet 9)

Study Area/Keyword: Loss of Water Hazard

Event Identifier	Initiating Event	Safeguards	Frequency	Hazard Consequence	Worker Consequence	Public Consequence
1614669/165	1. Tanks cannot be filled. 2. Unable to flush.	1. None Identified at this time	3	1. Process stopped.	1	1

Study Area/Keyword: Occupational Safety Hazard

Event Identifier	Initiating Event	Safeguards	Frequency	Hazard Consequence	Worker Consequence	Public Consequence
1614669/174	1. Opening into tank. 2. Manual handling of drums containing ion exchange materials and caustic. 3. Resin is a trip hazard.	1. Guard on opening of tank. 2. Appropriate manual handling training and procedures. 3. Good housekeeping.	3	1. Potential for worker to fall into tank. 2. Potential for injury due to lifting / moving of drums. 3. Potential to slip on any resin spilt on the floor.	3	1

Study Area/Keyword: Secondary Off-Gas Treatment - Criticality Hazard

Event Identifier	Initiating Event	Safeguards	Frequency	Hazard Consequence	Worker Consequence	Public Consequence
1614669/180	1. Build up of fissile material on resin.	1. Concentration of TRU in feed likely to be small. 2. Criticality report (A. Jenkins, NRS) has indicated that there is no potential for such an incident in TWRS-P waste feeds.	1	1. Potential for criticality.	1	1

Fault Schedule: Cs / Tc Fresh Resin Addition and Removal

(Sheet 10)

Study Area/Keyword: Shielding Hazard

Event Identifier	Initiating Event	Safeguards	Frequency	Hazard Consequence	Worker Consequence	Public Consequence
1614669/154	1. Shinepath through empty pipework. 2. Cs doserates will dominate Tc.	1. Joggling of pipework. 2. Sharp bends avoided to assist flow.	1	1. Potential for external dose to workers / public.	1	1

Study Area/Keyword: Ventilation - Challenge due to Spray and Increased Activity to Vessel Vent Hazard

Event Identifier	Initiating Event	Safeguards	Frequency	Hazard Consequence	Worker Consequence	Public Consequence
1614669/157	1. Airborne activity migration via vent system. 2. Tank emptied completely - heel removed and valves to columns remain open.	1. Air is pulled from lower to higher active area. Mixing by lift and drop - no potential identified for sparging vessel.	3	1. Challenge to ventilation system.	2	2

5.2.10 LAW Melter Feed Evaporator

The product of the LAW process is vitrified waste containing up to 20 % by weight sodium hydroxide for Envelope A and C feed and up to 7.9% by weight for Envelope B feed. This is produced by adding a preblended mixture of concentrated sodium-rich radioactive liquid waste and inactive glass formers, such as sand and borate, to the LAW melters. The radioactive waste is concentrated to increase the glass production rate of the melter and to reduce the mass of water being driven off into the melter offgas system.

The melter liquid feed evaporator system concentrates pretreated LAW solutions received from the upstream ion exchange system, to 10M sodium for Envelopes A and C and 5M Na for Envelope B. This feed concentration is achieved by using a forced-circulation, vacuum evaporation system. The main process components of the evaporator system include the reboiler, evaporator vessel, recirculation system, and condensate collection tanks.

The evaporator receives pretreated LAW solutions from vessels V2603 A/B/C. The feed is pumped (P2603 A/B) into the recirculation line on the upstream side of the reboiler (E3101) at a rate controlled to maintain a constant evaporator liquid level. As the feed enters the recirculation line it blends with the recirculating process stream, which flows to the reboiler.

In the reboiler (E3101), the mixture is heated slightly to a specified operating temperature, normally between 40-50 °C (104-122 °F) by using low-pressure saturated steam. The low-pressure steam provides adequate heat input to maintain a constant level in the evaporator vessel, without boiling the liquid in the reboiler tubes. The resulting low temperature differential across the reboiler helps minimize scale formation on the tubes. The exhaust low-pressure steam passes through a condensate trap to the steam condensate collection vessel V3105.

The heated process stream is discharged from the reboiler to the evaporator (V3101), which is maintained at a pressure of 0.738 to 0.123 bar absolute. Under this reduced pressure, a fraction of the water in the heated process steam flashes to steam and is drawn through a vapor line that leads to the primary condenser (E3102). As evaporation takes place, the waste approaches the saturation limit of aluminate. The product is maintained purposely below this limit to avoid crystal growth and precipitation in the evaporator. Precipitates in the concentrated waste would be more difficult to sample and mix with the inactive glass formers.

After the liquid has remained in the evaporator long enough to reach the required concentration, the liquid flows to the recirculation pump (P3101) suction through the bottom of the evaporator and lower recirculation line. The recirculation pump discharges the liquid back to the reboiler through the upper recirculation line, thus completing the process circuit. The process is run continuously to supply the three LAW melters.

The recirculation pump moves waste at high velocities through the reboiler to:

1) Improve the heat transfer coefficient
2) Reduce fouling on the reboiler tube bundle
3) Permit the transfer of large quantities of heat with only a small change in temperature of the solution being heated

The static pressure of the solution above the reboiler is sufficient to suppress the boiling point so the solution does not boil in the reboiler tubes. Boiling occurs only near or at the liquid surface in the evaporator.

When the process solution has been concentrated, a small fraction is withdrawn from the upper recirculation line upstream of the feed addition point and is pumped by the product pump P3102 to one of the product buffer vessels V3102, V3103, and V3104. These are heated and agitated to prevent the concentrated solution from crystallizing if the melter feed is stopped for a significant length of time.

Pressure in the evaporator is maintained by removing vapors via the process vapor line with a two-stage vacuum evacuation system. This consists of two ejectors in series, W3101 A/B and W3102 A/B, and an aftercondenser, E3103. A majority of the vapors are condensed in the primary condenser E3102, which drains to the process condensate collection vessel, V3106 (1.15 m^3). The ejector exhaust and remaining water vapor that passed through the primary condenser are condensed by the evaporator aftercondenser E3103, which also drains to the condensate collection vessel, V3106. The noncondensables passing through the aftercondenser are filtered and discharged to the atmosphere via the vessel vent scrubber.

The process condensate (V3106) is discharged to the condensate holding vessel V9306 A/B. Condensates not meeting discharge limits are sent to the contaminated process condensate tank.

The low-pressure steam condensate (V3105) is returned to the low-pressure steam boiler feed via the return line if the online monitor shows that this condensate is uncontaminated. Contaminated steam condensates will be transferred to the clean process condensate tank (V9306 A/B).

The potential for radionuclide contamination of the cooling water is very low because the cooling water pressure is higher than the vapor pressure in the tubes under normal operational conditions. Also, because of the normally high flow volume, the radionuclide concentrations would be low and would be detected only by sample analysis. To minimize the risk of contamination accumulating in the cooling water circuit under abnormal conditions, the cooling water streams from the primary and aftercondenser evaporator are monitored for radiation.

Services required for the LAW melter feed evaporator system are

1) Low pressure, steam for evaporator reboiler (to E3101)
2) Medium-pressure steam for evacuation system ejectors, W3101 and W3102
3) Medium-pressure steam for condensate transfer ejectors W3103, W3104, W3105, and W3106

5.2.10.1 LAW Melter Feed Evaporator Study Areas and Hazard Evaluation Team

The LAW melter feed preparation is an evaporation process. Included in this process module for hazard evaluation study and review are the feed, concentrated product, and the condensate systems. Two PFDs, O/PR/3100 and O/PR/2100, were used in the review of the following study areas:

1) Feed tanks (one filling, one feeding)
2) Evaporation and the evaporator
3) Product handling – evaporator discharge and tanks
4) Condensate collection and handling

The hazard evaluation team members and respective disciplines are listed as follows:

G. Sutherland – Safety, Team Leader
M. Johnson – Technical Manager
R. Cullen – Safety, Scribe
D. Vicker – Process
M. Currey – Process
I. Roberts – Process

Fault Schedule: LAW Melter Feed Evaporator

(Sheet 1)

Study Area/Keyword: Criticality Hazard

Event Identifier	Initiating Event	Safeguards	Frequency	Hazard Consequence	Worker Consequence	Public Consequence
1614661/118	1. High concentration of fissiles in evaporator.	1. Feed tanks can be flushed out with water. 2. Criticality alarms will be fitted. 3. Concentration of TRU in feed likely to be small. 4. Criticality report (A. Jenkins, NRS) has indicated that there is no potential for such an incident in TWRS-P waste feeds. 5. All operations are located in-cell.	1	1. Potential for criticality.	1	1

Study Area/Keyword: Decontamination Hazard

Event Identifier	Initiating Event	Safeguards	Frequency	Hazard Consequence	Worker Consequence	Public Consequence
1614661/125	1. Maintenance / replacement of evaporator. 2. Activity accumulation in evaporator.	1. Provision of emptying ejectors and wash rings to all vessels. 2. Washing by dilute acid / water for most effective cleaning.	4	1. Contamination.	1	1

Fault Schedule: LAW Melter Feed Evaporator

(Sheet 2)

Study Area/Keyword: Domino (Other Effects) Hazard

Event Identifier	Initiating Event	Safeguards	Frequency	Hazard Consequence	Worker Consequence	Public Consequence
1614661/135	1. Feed forward to LA melter. 2. Mis-routing of concentrated concentrate. 3. Under specified feed.	1. Sampling / sentencing - density and temperature measurement are used to demonstrate concentration. 2. Failure mode of monitors to fail-safe mode. 3. Only one destination vessel - melter / feed vessel. 4. Declared clean process condenstae goes to ETF. (see Philosophy document).	3	1. Overconcentration - Melter performance optimum at 10M Na. Throughput may be adversely affected. 2. Recrystalisation; may result in unrepresentative sample being taken. Out-of-specification product. 3. Re-work of misrouted concentrate - throughput issue.	1	1

Fault Schedule: LAW Melter Feed Evaporator

(Sheet 3)

Study Area/Keyword: Explosion / Overpressure Hazard

Event Identifier	Initiating Event	Safeguards	Frequency	Hazard Consequence	Worker Consequence	Public Consequence
1614661/122	1. Hydrogen and / or ammonia explosion. 2. Reverse flow steam in ejector and blocked discharge. 3. Steam trap downstream of condenser fails open. 4. Radiolytic hydrogen production. 5. Blockage of vessel vent, co-incident with blocked ejector outlet.	1. Steam traps and ventilation system. 2. Condensers connected to vessel vent, sized to cater for pressure potential. 3. Potential for the build-up of radiolytic hydrogen to explosive concentrations to be prevented, i.e. using passive protection (e.g. a deterministic approach involving provision of vessel vent with appropriate sizing / configuration such that LEL cannot be reached with credit not taken for active ventilation systems). 4. Potential for significant radiolytic hydrogen production is low (reference: calculations performed by D. Vickers action at Hanford TWRS-P PHA+ Studies) confirming that for large volume vessels, the time taken to reach 1% hydrogen in air varies from tens of hours to several days with no credit taken from active ventilation systems.	3	1. Local increase in pressure. 2. Condensate to Vessel Vent. 3. Cotamination spread through the cell, leading to increased challenge to cell ventilation system.	2	2

Fault Schedule: LAW Melter Feed Evaporator

(Sheet 4)

Study Area/Keyword: External Dose Hazard

Event Identifier	Initiating Event	Safeguards	Frequency	Hazard Consequence	Worker Consequence	Public Consequence
1614661/114	1. Activity breakthrough from ion exchange columns. 2. Maintenace activities.	1. Surge vessel and monitoring facilities to protect against activity breakthrough. 2. Centrifugal recirculation pump-placed in shielded bulges for maintenance purposes. 3. Cell with sump, leak detection with liquor recovery routes. 4. Activity levels in concentration are generally low.	2	1. Dose uptake to Workers / Public.	2	1

Fault Schedule: LAW Melter Feed Evaporator

(Sheet 5)

Study Area/Keyword: Fire Hazard

Event Identifier	Initiating Event	Safeguards	Frequency	Hazard Consequence	Worker Consequence	Public Consequence
1614661/120	1. Pump motor major failure (ceased, motor internal electrical fault, fault in mechanical linkage, electrical or mechanical overload). 2. Flammability of ammonia.	1. Fire load in this area is restricted, aqueous liquor - not combustible. 2. Flammability limit of ammonia in air is relatively high. 3. Chosen pump will maintain duty cycle and expected mechanical loadings, therefore not overloaded and present insignificant risk during normal operation, pump casing fire resistant. 4. Low temperature (50 deg C) operation. 5. No runaway reactions identified. 5. Pumps segregated in bulges for maintenance purposes. 6. Fire and smoke detection systems will be fitted in the area. 7. Overload and overcurrent protection fitted to all electrical equipment. 8. Potential for hydrogen evolution in this system is extremely low (refer to PHA action placed on D. Vickers). 9. Preventative maintenance and overhaul programme for all pumps and other electrical equipment. 10. Good housekeeping to keep fire loading in the vicinity as low as possible at all times.	3	1. Fire Risk due to combustion of ammonia.	2	1

Fault Schedule: LAW Melter Feed Evaporator

(Sheet 6)

Study Area/Keyword: Internal Dose Hazard

Event Identifier	Initiating Event	Safeguards	Frequency	Hazard Consequence	Worker Consequence	Public Consequence
1614661/115	1. Activity release, leaks. 2. Manual sampling activities. 3. Activity or solids to build up on entrainment pad. 4. Activity release to the ventilaiton system.	1. Disentrainment pad in vent system to remove bulk droplets. 2. Decontamination (wash down) facilitites available. 3. Agitation by by means of lift and drop - minimal splashing. 4. Closed, vented vessels - potential for dispersion is reduced. 5. Maintenance procedures, adequate drain down facilities. 6. Bulge/cell ventilaiton system is likely to be C5.	3	1. Increased Internal Dose to Workers / Public.	2	1

Study Area/Keyword: Loss of Air Hazard

Event Identifier	Initiating Event	Safeguards	Frequency	Hazard Consequence	Worker Consequence	Public Consequence
1614661/130	1. Loss of instrumentaion - pneumercators. 2. Loss of air inbleed to ejectors. 3. Loss of air to valve actuators. 4. Loss of agitation.	1. Event will be revealed. 2. Valves fail to a safe state.	2	1. No mixing - poor product quality. 2. Loss of sampling and agitation. 3. Process delay - may be insignificant.	1	1

Fault Schedule: LAW Melter Feed Evaporator

(Sheet 7)

Study Area/Keyword: Loss of Containment Hazard

Event Identifier	Initiating Event	Safeguards	Frequency	Hazard Consequence	Worker Consequence	Public Consequence
1614661/145	1. Leak.	1. Containment maintained by all welded pipework, in-cell cladding and sump with liquor detection and recovery. 2. Hardwired high-level trip system (vessels have no overflow). (General plant philosophy). 3. Condensate collection tanks are sited appropriately. 4. Possible small pots.	2	1. Liquor leaks to cell. Increased challenge to cell ventilation system.	1	1

Study Area/Keyword: Loss of Power Hazard

Event Identifier	Initiating Event	Safeguards	Frequency	Hazard Consequence	Worker Consequence	Public Consequence
1614661/127	1. Electricity supply system failure - loss of pumps.	1. Steam shuts off on low liquor level. 2. Instrumentation (for essential equipment) backed up. 3. Failure to safe modes upon loss of power.	3	1. Process stops. 2. Cannot fill or empty process vessels. 3. Potential for liquor to crystallise on loss of pumping. 4. Hot liquor from evaporator on restart.	1	1

Fault Schedule: LAW Melter Feed Evaporator

(Sheet 8)

Study Area/Keyword: Loss of Steam Hazard

Event Identifier	Initiating Event	Safeguards	Frequency	Hazard Consequence	Worker Consequence	Public Consequence
1614661/153	1. Supply valve failure - evaporator contents are cooled.	1. Cooling is slow - large thermal inertia. 2. Recovery route is available.	2	1. Crystalisation in evaporator resulting in potential fluid handling difficulties; throughput issue.	1	1

Study Area/Keyword: Loss of Water Hazard

Event Identifier	Initiating Event	Safeguards	Frequency	Hazard Consequence	Worker Consequence	Public Consequence
1614661/129	1. Loss of cooling ability. 2. Loss of washing - not a hazard.	1. Low flow alarm on cooling water.	3	1. Loss of cooling - water vapour to ventilation system. 2. Potential for filter systems to collapse.	2	2

Study Area/Keyword: Shielding Hazard

Event Identifier	Initiating Event	Safeguards	Frequency	Hazard Consequence	Worker Consequence	Public Consequence
1614661/117	1. Large bore penetrations through shielding.	1. No direct shinepath - joggling of penetrations. 2. Positioning of penetratioins such that they are not be near a routine access area. 3. Activity levels in this part of the plant will be relatively low.	1	1. External or internal dose to Workers or Public.	1	1

5.2.11 LAW Melter System

The LAW melter system consists of three identical melters. Each melter has a design capacity of 10 Mt of glass per day and a minimum availability of 60 percent. Each melter has a single chamber with a glass surface area of 10 m^2 (107 ft^2), with internal dimensions of approximately 5.0 m by 2.0 m (16.4 ft by 6.6 ft). The external dimensions of each melter, excluding the feed and offgas systems, will have dimensions approximately 6.5 m long by 4.5 m wide by 4.0 m high (21.3 ft long by 14.8 ft wide by 13.1 ft high), and will weigh approximately 230 Mt (250 tons) empty, and 250 Mt (275 tons) containing glass. Discharge from each melter is through one of the two discharge chambers located side by side on the long axis side of the melter. Each melter is mounted on a rail as part of a planned trolley system that is integral to the melter structural framework. This system allows the melter to be removed for disposal and installation of a new melter. Each melter incorporates an integral cooling water jacket to all sides, bottom, and the lid. Cooling reduces heat losses to the cell.

Electrical Configuration

The electrical configuration for each LAW melter consists of three pairs of plate electrodes mounted parallel to each other on the longer side walls of the melter. Buses penetrate the side of the melter below the glass level to minimize thermal expansion. Active cooling of the buses and the use of a water cooling jacket prevent glass migrating through the refractory package adjacent to the electrode penetrations and reduce the plugging rate in the offgas line. Power to each pair of electrodes is via a 240-volts, 5000-amps, single-phase, alternating current, dry-type power transformer. Transformers are located outside the cell to facilitate maintenance. Remote bus connectors are located inside the cell to facilitate remote changeout of melters. Individual control of electrode pairs is by resistance and temperature feedback of the glass melt pool. Thermocouples placed within the melter refractory package and glass pool are planned to provide temperature feedback.

Refractory Package

The refractory design is split into two parts below the glass level and above the glass level. The melter refractory package below the glass level consists of three layers: glass contact refractory, back up refractory, and an electrical isolating barrier. This package, used in conjunction with active cooling provided by a water jacket, provides glass containment, thermal insulation, and electrical isolation. Glass migration through the refractory package is limited to within the glass contact refractory by establishing an isotherm that freezes molten glass below 700 °C (1300 °F). The refractory package is designed to provide adequate containment in the event of temporary loss of cooling. Prolonged operations without cooling may lead to premature corrosion of refractory materials and additional heat load to the cell.

The refractory package above the glass level, around the plenum area, differs from that of the refractory package below the glass level only as the primary refractory material. Thermal expansion within the refractory package is accommodated externally by an expandable water jacket.

Melter Containment and Lid Design

Melter containment is provided by the outer shell. This shell provides a containment barrier and maintains a negative pressure difference with respect to the cell to prevent both gaseous releases and glass leakage to the cell. The outer shell is constructed from 304L stainless steel. Penetrations through the outer shell are sealed by appropriate gaskets and flanges that allow remote removal and replacement. Where practical, the outer shell is fabricated to permit ease of removal to facilitate melter dismantlement in a remote environment.

The lid design of the melter consists of a protective Inconel 690 ceiling plate, a layer of castable refractory, and a 304L stainless steel outer shell/water jacket.

Glass Discharge Chamber

Glass discharge from the LAW melter is through one of two discharge chambers. Each chamber is designed to be capable of discharging 10 Mt (11 tons) of glass per day. Two chambers are provided for redundancy. Discharge is achieved by transferring glass from the bottom of the melter pool into the discharge chamber and subsequently pouring the glass into a container. Glass transfer is achieved by one of two methods or a combination of both. These methods are gas lift and a vacuum-assisted lift.

Spontaneous discharges, which have been noted with similar discharge arrangements as a result of a foaming incident or a melter pressurization causing glass to overflow into the discharge chambers, is prevented by providing adequate head height between the top of the melt glass level on the melter and the discharge trough. In addition, the use of a vacuum discharge system allows this height to be adjusted by altering the differential pressure between the plenum and discharge chamber in response to any sudden increases in height of the glass in the melter.

Offgas System

Each melter has two offgas ports situated on either side of the melter's long axis center line that connect to a single quench tower. Two ports are provided for redundancy in the event of severe blockage of the primary port. Offgas exiting the melter carries solid particulates from the feed and vitrification process. Three methods are proposed to minimize buildup of these particulates within the offgas port and quencher inlet duct. In the first method, air is injected into the offgas port to provide a cool film of air over the internal surfaces. This film effectively reduces the potential for particulates depositing as they contact the wall surfaces. The second method to minimize solids buildup is to periodically flush these lines with water sprays. The third method is to remove built-up solids on a routine basis using a mechanical reamer.

5.2.11.1 LAW Melter System Study Areas and Hazard Evaluation Team

The pre-meeting included a training to familiarize the Duratek team member with the hazard evaluation process. Information available to the study participants included the 50% Conceptual Design Description of the melter feed system, the melters, and the primary offgas system, section views, line diagrams, and the following PFDs: LAW & HLW Vitrification Glass Former Blending (PFD 3200), LAW Vitrification Feed Preparation (PFD 3220), and LAW Vitrification and Offgas Quenching (PFD 3240).

In the pre-meeting, the following LAW melter study areas were designated for review by the hazard evaluation team:

1) Glass-former feed system
2) Glass-former feed system to LAW condensate
3) Melter system
4) Melter offgas system

The hazard evaluation team members and respective disciplines are listed as follows:

R. J. Cullen – Safety, Team Leader
I. Joseph – Vitrification technology
M. Currey – Process Engineer
M. Knight – Process Engineer
M. O'Brien – Mechanical Engineer
M. Pyrtherch – Mechanical Engineer
N. Bailey – Mechanical
P. Maccdo – Vitrification technology
P. Wasserman – Vitrification technology
R. Peters -
S. Webb – Process Engineer
S. Wright – Instrumentation and Control
W. Eaton – Vitrification system design

5.2.11.2 LAW Melter System Fault Schedules

Fault Schedule: LAW/HLW Glass Melter

(Sheet 1)

Study Area/Keyword: Corrosion / Erosion Hazard

Event Identifier	Initiating Event	Safeguards	Frequency	Hazard Consequence	Worker Consequence	Public Consequence
3200/179	1. Aggressive glass chemistry. 2. Melter cycling - expansion and contraction rates. 3. Erosion of the lid by off-gas. 4. Interfaces at plenum are critical. 5. Distortion of materials - creep. 6. Vertical electrical path in molten glass. 7. Chlorides in feeds.	1. Choice of apporpriate materials for melter lid. 2. Monitor and replacement of critical components. 3. Seals to be appropriately specified, together with correct selection of materials. 4. Use of in-cell flanges and joints may be required to facilitate vessel removal, but not seen as desirable. 5. HLW corrosion rates, relative to LAW will be less. 6. Components may dissolve only slowly, due to material choice. 7. Refractory materials kept under compression during melter cool-down.	3	1. Bubblers, other components, may fall into melter due to corrosion. 2. Potential for metallic components to short electrodes. 3. Potential for loss of glass containment. 4. Potential for seal erosion. 5. Breakthrough of activity into cooling water coils. 6. Potential for vertical electrical path in molten glass to cause enhanced erosion in pipes and electrodes. 7. Distortion of materials - creep. 8. Corrosion of the lid by off-gas.	2	1

Fault Schedule: LAW/HLW Glass Melter

(Sheet 2)

Study Area/Keyword: Domino (Other Effects) Hazard

Event Identifier	Initiating Event	Safeguards	Frequency	Hazard Consequence	Worker Consequence	Public Consequence
3200/180	1. Foaming resulting in resistivity increase.	1. Smart control system - with sufficiently fast response time.	3	1. Runaway situation. Increase in power causes further increase in foaming.	1	1

Study Area/Keyword: Dropped Load / Impact Hazard

Event Identifier	Initiating Event	Safeguards	Frequency	Hazard Consequence	Worker Consequence	Public Consequence
3200/183	1. Removal / replacement of melter.	1. Shrouding over electrode buses. 2. Window guards, e.g. polycarbonate shields (may discolour with age). 3. Routine replaceable items are light.	3	1. Vulnerability of pipework. 2. Replacement of pipework. 3. Shorting hazard. 4. Window breakage.	1	2

Fault Schedule: LAW/HLW Glass Melter

(Sheet 3)

Study Area/Keyword: Explosion / Overpressure Hazard

Event Identifier	Initiating Event	Safeguards	Frequency	Hazard Consequence	Worker Consequence	Public Consequence
3200/167	1. Melter overpressurised: i) Blockage of off-gas line (progressive restriction in normal off-gas system capacity). ii) Erratic boiling. iii) Cold-cap collapse.	1. Design pressure is around 100 psi - withstand capability will be much higher than this figure. Maxamum overpressure likely to be less than 100 psi. 2. Emergency off-gas system. Damper opens emergency system in event of melter pressurisation. 3. Line is long enough to ensure there is a sufficient pressure drop before the gas reaches the HEPA filters. 4. Melter pressure is measured / monitored. 5. Cell integrity likely to be maintained. 6. Pressure transients are expected in normal operation.	3	1. Explosion. Potential for contamination spread. 2. Excess gas release to off-gas system. 3. Potential for increased dose uptake to Workers and Public.	1	2

Fault Schedule: LAW/HLW Glass Melter

(Sheet 4)

Study Area/Keyword: External Dose Hazard

Event Identifier	Initiating Event	Safeguards	Frequency	Hazard Consequence	Worker Consequence	Public Consequence
3200/160	1. Leakage. 2. Shine path to inactive areas. 3. Melter nozzle cooling water breech. 4. Feed line fails. 5. Operator fails to reconnect line correctly. 6. Activity backflow into compressed air lines.	1. Vessel is in-cell. 2. Primary and secondary cooling water circuits. 3. Monitoring of activity level in the cooling water. 4. Diversion. 5. Cooling water volume is monitored. 6. Adequate shielding. 7. HEPA filtration in cell vent system. 8. Liquor collection in cell sump and return. 9. Many components are remotely replaceable.	2	1. Potential for dose uptake to Workers / Public. 2. Activity enters cooling water system due to leak in water cooled nozzle in melter. 3. Feed line fails - additional activity enters cell. 4. Challenge to cell vent system.	2	2

Study Area/Keyword: Extreme Weather Hazard

Event Identifier	Initiating Event	Safeguards	Frequency	Hazard Consequence	Worker Consequence	Public Consequence
3200/181	1. High rainfall, flooding, snow. 2. Low temperature. 3. Temperature fluctuations during spells of extreme weather.	1. Protection required will be provided by facility.	3	1. No hazard consequence identifed - facility assumed to cater for prevalent weather conditions.	1	1

Fault Schedule: LAW/HLW Glass Melter

(Sheet 5)

Study Area/Keyword: Fire Hazard

Event Identifier	Initiating Event	Safeguards	Frequency	Hazard Consequence	Worker Consequence	Public Consequence
3200/166	1. Arcs can develop in melter lid area. 2. Glass spillage - molten glass temperature is 1150 degC.	1. Fire load is restricted in this area. 2. Floor and wall wash down to reduce combustibles in area. 3. Good housekeeping within cell area, particularly following a primary incident, e.g. glass spillage.	3	1. Flammable inventory in-cell on fire. 2. Electrical fire within cell.	1	1

Study Area/Keyword: Glass Former Feed System to LAW Concentrate - Domino (Other Effects) Hazard

Event Identifier	Initiating Event	Safeguards	Frequency	Hazard Consequence	Worker Consequence	Public Consequence
3200/153	1. Corrosion / erosion to downstream pumps due to metal contaminants in process stream. 2. Melter life impaired due to presence of metals in process stream. 3. Quencher effluent material contains highly corrosive substances.	1. None Identified at this time.	3	1. Increased / enhanced Corrosion / Erosion. 2. Melter failure - may require premature replacement. 3. Concentration of recirculated insoluble materials will increase. A waste loading / throughput issue	1	1

Fault Schedule: LAW/HLW Glass Melter

(Sheet 6)

Study Area/Keyword: Glass Former Feed System to LAW Concentrate - Explosion / Overpressure Hazard

Event Identifier	Initiating Event	Safeguards	Frequency	Hazard Consequence	Worker Consequence	Public Consequence
3200/141	1. Compressed air.	1. Compressed air working pressure is 7 bar. 2. Compressed air is regulated in the cell. 3. Liquor in V3220 will be heated by the agitation of the fluid. (LAW concentrate kept at 50deg C to prevent recrystallisation). 4. Materails specification will need to account of these elevated temperatures.	2	1. Back contamination through seal. 2. Cotamination spread through the cell. 3. High temperatures may result in potential for difficulty in pumping.	2	1

Study Area/Keyword: Glass Former Feed System to LAW Concentrate - External Dose Hazard

Event Identifier	Initiating Event	Safeguards	Frequency	Hazard Consequence	Worker Consequence	Public Consequence
3200/133	1. Activity backflow from in-cell mixing vessel to screw conveyor. 2. Maintenance operations. 3. Interface exists between active and inactive feed systems. 4. Potential for back diffusion of activity. 5. Potential radiation shine paths.	1. Air purge down feed line to mixing vessel of sufficient pressure to ensure correct displacement of active liquor. 2. Maintainable equipment may be in a bulge.	3	1. Dose uptake due to maintenance operations (e.g. replace/maintain agitator).	2	1

Fault Schedule: LAW/HLW Glass Melter

(Sheet 7)

Study Area/Keyword: Glass Former Feed System to LAW Concentrate - Fire Hazard

Event Identifier	Initiating Event	Safeguards	Frequency	Hazard Consequence	Worker Consequence	Public Consequence
3200/140	1. Pump motor fire. 2. Electrical fire.	1. Fire loading is restricted in this area.	2	1. Fire.	3	1

Study Area/Keyword: Glass Former Feed System to LAW Concentrate - Internal Dose Hazard

Event Identifier	Initiating Event	Safeguards	Frequency	Hazard Consequence	Worker Consequence	Public Consequence
3200/134	1. Tank leak. 2. Valve failure due to erosion. 3. Pump catastrophic failure. 4. Hands-on maintenance may be required. 5. Handling of high solids content material upstream of the melter.	1. Active systems are in-cell. 2. Sumps and recovery equipment. 3. Backflush facilities required for any hands-on maintenance.	2	1. Recovery difficult in the event of tank leak (in-cell replacement of tank could involve considerable expense). 2. Increased Internal Dose due to Maintenance operations.	1	1

Fault Schedule: LAW/HLW Glass Melter

(Sheet 8)

Study Area/Keyword: Glass Former Feed System to LAW Concentrate - Loss of Air Hazard

Event Identifier	Initiating Event	Safeguards	Frequency	Hazard Consequence	Worker Consequence	Public Consequence
3200/149	None Identified	1. Backup air supplies may be required.	2	1. Loss of level measurement (pneumercators). 2. Loss of valve control. 3. Loss of air purge.	1	1

Study Area/Keyword: Glass Former Feed System to LAW Concentrate - Loss of Containment Hazard

Event Identifier	Initiating Event	Safeguards	Frequency	Hazard Consequence	Worker Consequence	Public Consequence
3200/138	1. Leaking vessels within cell. 2. Overfilling of hopper or in-cell vessels.	1. Sump and recovery of high solids content liquor. 2. Diverse Pneumercator level detection in vessel. 3. Inter-vessel and feed forward transfer pump are in bulges. 4. Double block and bleed of pumps, possibly with seal flush. 5. Other fluidic transfer devices may be considered.	3	1. Overflow via agitator shaft onto floor resulting in airborne contaminants that would challenge the cell ventilation.	2	2

Fault Schedule: LAW/HLW Glass Melter

(Sheet 9)

Study Area/Keyword: Glass Former Feed System to LAW Concentrate - Loss of Power Hazard

Event Identifier	Initiating Event	Safeguards	Frequency	Hazard Consequence	Worker Consequence	Public Consequence
3200/146	1. No agitation of glass former / LAW in vessel.	1. Integrity of agitation system should be high.	2	1. Settle-out of waste material. 2. Potential for blockage.	1	1

Study Area/Keyword: Glass Former Feed System to LAW Concentrate - Loss of Steam Hazard

Event Identifier	Initiating Event	Safeguards	Frequency	Hazard Consequence	Worker Consequence	Public Consequence
3200/147	1. Loss of vessel emptying ejectors.	1. None Identified at this time	2	1. Operability - cannot empty vessel.	1	1

Study Area/Keyword: Glass Former Feed System to LAW Concentrate - Loss of Water Hazard

Event Identifier	Initiating Event	Safeguards	Frequency	Hazard Consequence	Worker Consequence	Public Consequence
3200/148	1. Loss of cooling water.	1. Emergency water supplies are provided.	3	1. Operability - cannot flush lines. 2. Cannot cool nozzle connection to melter. Potential for blockages or nozzle failure.	1	1

Fault Schedule: LAW/HLW Glass Melter

(Sheet 10)

Study Area/Keyword: Glass Former Feed System to LAW Concentrate - Ventilation - Failure of System Hazard

Event Identifier	Initiating Event	Safeguards	Frequency	Hazard Consequence	Worker Consequence	Public Consequence
3200/139	1. Vessel vent line becomes blocked.	1. C5 vessel vent. 2. Cell will also be vented (appropriate extract rate will be chosen).	4	1. Potential overfilling resulting in blockage of vessel vent line (refer to Loss of Containment).	1	1

Study Area/Keyword: HA Glass Melter - Decontamination Hazard

Event Identifier	Initiating Event	Safeguards	Frequency	Hazard Consequence	Worker Consequence	Public Consequence
3200/253	1. Glass spillages to cell. 2. Clean-up after spillages. 3. Container contamination. 4. Off-gassing to ventilation system.	1. The design philosophy is to contain, as opposed to prevent, glass spillages. 2. Additional lay down and racking areas to be provided in HA Melter cell. 3. Use of wash rings. 4. Difference is in degree of contamination between LA and HA Melter only. 5. In-cell good housekeeping practice may mitigate potential hazards, due for example to, feed leakage on melter lid. 6. Prevention of Glass Spillages. Additional wash down of cranes and other in-cell equipment may also be necessary.	4	1. Bogie / Rail interface will contain high level of crushed glass and hence activity.	1	1

Fault Schedule: LAW/HLW Glass Melter

(Sheet 11)

Study Area/Keyword: HA Glass Melter - Dropped Load / Impact Hazard

Event Identifier	Initiating Event	Safeguards	Frequency	Hazard Consequence	Worker Consequence	Public Consequence
3200/265	1. Removal / replacement of melter and / or components.	1. Shrouding over electrode buses. 2. Window guards, e.g. polycarbonate shields (may discolour with age). 3. Routine replaceable items are light. 4. During maintenance, there will be no feeds.	2	1. Vulnerability of pipework. 2. Replacement of pipework. 3. Shorting hazard. 4. Window breakage.	4	2

Fault Schedule: LAW/HLW Glass Melter

(Sheet 12)

Study Area/Keyword: HA Glass Melter - Explosion / Overpressure Hazard

Event Identifier	Initiating Event	Safeguards	Frequency	Hazard Consequence	Worker Consequence	Public Consequence
3200/249	1. Melter overpressurised by compressed air. 2. Blockage of Main Off-Gas system. 3. Progressive restriction in normal off-gas system capacity. 4. Melter pressurised by pressure transients expected in normal operation.	1. Emergency off-gas system. Damper opens emergency system in event of melter pressurisation. 2. Line is long enough to ensure there is a sufficient temperature drop before off- gas reaches the HEPA filters. 3. Melter pressure is measured / monitored. 4. Compressed air working pressure is 7 bar and is regulated in the cell. 5. Liquor in V4201 will be heated by the agitation of the fluid. (HLW concentrate kept at 50deg C to prevent recrystallisation). 6. Materails specification will need to account of these elevated temperatures. 7. LA and HA Melter Off-Gas systems are likely to be similar.	3	1. Excess gas release to off-gas system. 2. Back contamination through seal. 3. Cotamination spread through the cell.	2	2

Fault Schedule: LAW/HLW Glass Melter

(Sheet 13)

Study Area/Keyword: HA Glass Melter - External Dose Hazard

Event Identifier	Initiating Event	Safeguards	Frequency	Hazard Consequence	Worker Consequence	Public Consequence
3200/242	1. Leakage. 2. Shine path to inactive areas. 3. Melter nozzle cooling water breech. 4. Feed line fails. 4. Operator fails to reconnect line correctly. 5. Activity backflow into compressed air lines. 6. External dose due to maintenance operations - disposal of bubblers, etc is an issue, due to higher contamination than LAW (thus potential for external dose).	1. Adequate shielding - joggle boxes, etc to eliminate shinepaths. 2. Vessel is in-cell. 3. Primary and secondary cooling water circuits will prevent activity reaching inactive operating areas. Additionally, activity level in cooling water is monitored, as is cooling water volume - leak detection. 4. HEPA filtration in cell vent system.1. Many components are remotely replaceable. 2. Melter cannister is a different shape to LAW much more difficult to mis-route cannister. 3. Addtional shielding could be required for the disposal route.	3	1. Activity enters cooling water system due to leak in water cooled nozzle in melter. 2. Dose uptake to Workers / Public. 3. Feed line fails. 4. Additional activity enters cell. 5. Challenge to cell vent system.	2	2

Study Area/Keyword: HA Glass Melter - Extreme Weather Hazard

Event Identifier	Initiating Event	Safeguards	Frequency	Hazard Consequence	Worker Consequence	Public Consequence
3200/263	1. High rainfall, flooding, snow. 2. Low temperature. 3. Temperature fluctuations during spells of extreme weather.	1. Protection required will be provided by facility.	3	1. No hazard consequence identifed - facility assumed to cater for prevalent weather conditions.	1	1

Fault Schedule: LAW/HLW Glass Melter

(Sheet 14)

Study Area/Keyword: HA Glass Melter - Fire Hazard

Event Identifier	Initiating Event	Safeguards	Frequency	Hazard Consequence	Worker Consequence	Public Consequence
3200/248	1. Arcs can develop in melter lid area. 2. Glass spillage, (molten glass temperature is 1150 degC). 3. Generation / ignition of radiolytic hydrogen.	1. Fire load is restricted in this area. 2. Floor and wall wash down to reduce combustibles in area. 3. Good housekeeping within cell area, particularly following a primary incident, e.g. glass spillage. 4. Potential for the build-up of radiolytic hydrogen to explosive concentrations to be prevented, i.e. using passive protection (e.g. a deterministic approach involving provision of vessel vent with appropriate sizing / configuration such that LEL cannot be reached with credit not taken for active ventilation systems). 5. Potential for significant radiolytic hydrogen production is low (reference: calculations performed by D. Vickers action at Hanford TWRS-P PHA+ Studies) confirming that for large volume vessels, the time taken to reach 1% hydrogen in air varies from tens of hours to several days with no credit taken from active ventilation systems.	3	1. Flammable inventory in-cell on fire. 2. Electrical fire within cell. 3. Radiolytic hygrogen fire / explosion :	2	2

Fault Schedule: LAW/HLW Glass Melter

(Sheet 15)

Study Area/Keyword: HA Glass Melter - Internal Dose Hazard

Event Identifier	Initiating Event	Safeguards	Frequency	Hazard Consequence	Worker Consequence	Public Consequence
3200/243	1. Overfilling of melter.	1. Glass could be removed so long as it is not stuck to the floor. 2. Cannister is sealed against the discharge chamber. 3. Philosophy is to contain, as opposed to prevent, spillage. 4. Melter should not be idled hot - potential for Cs and Tc to vapourise and escape. 5. Disposal route - collect into container (same as consumable items).	3	1. Increased Internal Dose to Workers due to recovery operations. 2. Spillage of glass - very little challenge to ventilation system. 3. Cannister and melter could become stuck together. 4. Potential for Cs and Tc levels to increase in Off-gas system. Potential for increased dose to Workers and Public due to increased Cs in off-gas (greater than LAW Melter).	1	1

Fault Schedule: LAW/HLW Glass Melter

(Sheet 16)

Study Area/Keyword: HA Glass Melter - Loss of Air Hazard

Event Identifier	Initiating Event	Safeguards	Frequency	Hazard Consequence	Worker Consequence	Public Consequence
3200/258	1. Loss of air supply.	1. Preperation for involuntary discharge is made.	2	1. Loss of agitation. 2. Air discharge mechanism failed. 3. Noble metal accumulation - potential for melter failure. 4. Glass discharge not possible. 5. Glass foaming - increase in glass level. 6. Potential for involuntary glass discharge even in event of feed system halt. Eventually, discharge will halt.	1	1

Fault Schedule: LAW/HLW Glass Melter

(Sheet 17)

Study Area/Keyword: HA Glass Melter - Loss of Containment Hazard

Event Identifier	Initiating Event	Safeguards	Frequency	Hazard Consequence	Worker Consequence	Public Consequence
3200/246	1. Thermocouple guide tube failure. 2. Catastrophic failure in primary containment via melter refectory penetrations. 3. Corrosion of quencher and / or off-gas systems. (refer to external and internal dose guidewords).	1. Loss of containment due to guide tube failure will not breech secondary containment (i.e. cell). 2. Air cooling of penetrations through refectory walls. Air exhaust into cell. 3. Apporpriate materials will be chosen for bubbler tubes and other components.	2	1. Consequences of event greater due to higher level of activity than LAW.	2	2

Study Area/Keyword: HA Glass Melter - Domino (Other Effects) Hazard

Event Identifier	Initiating Event	Safeguards	Frequency	Hazard Consequence	Worker Consequence	Public Consequence
3200/262	1. Foaming resulting in resistivity increase.	1. Smart control system - with sufficiently fast response time.	3	1. Potential unstable situation. 2. Increase in power causes further increase in foaming.	1	1

Study Area/Keyword: HA Glass Melter - Effluent / Washing Hazard

Event Identifier	Initiating Event	Safeguards	Frequency	Hazard Consequence	Worker Consequence	Public Consequence
3200/260	1. Decontamination of cannisters.	1. None Identified at this time	4	1. See LAW/HLW Container decontamination HE Study.	1	2

Fault Schedule: LAW/HLW Glass Melter

(Sheet 18)

Study Area/Keyword: HA Glass Melter - Loss of Power Hazard

Event Identifier	Initiating Event	Safeguards	Frequency	Hazard Consequence	Worker Consequence	Public Consequence
3200/255	1. Instrument power failure. 2. Melter Off-gas fans supply failure. 3. Component removal from Melter (e.g. bubbler) during routine maintenance. 4. Heating to glass is lost - glass chemistry considerations will make glass freeze more quickly. 4. Melter cycling (highly undesirable).	1. Melter is diesel backed. 2. Instrument power is UPS backed. 3. The off-gas power supply system will have sufficient reliability to ensure supply. 4. Melter glass may take upto 6 to 8 hours to freeze upon loss of power.	2	1. Potential for solidification of melter. 2. Loss of fan supply results in excess steam discharge to cell vent system. 3. Potential for loss of melter parameter indication (loss of instruments).	2	2

Study Area/Keyword: HA Glass Melter - Loss of Process Chemicals Hazard

Event Identifier	Initiating Event	Safeguards	Frequency	Hazard Consequence	Worker Consequence	Public Consequence
3200/259	1. Loss of feed material. 2. Increased residance time ; due to loss of throughput. 3. Cs, Tc volatiles will released due to loss of cold cap.	1. The operating level will be set appropriately. 2. Cs and Tc will be recycled via Off-Gas.	2	1. Set level reduced.	1	1

Fault Schedule: LAW/HLW Glass Melter

(Sheet 19)

Study Area/Keyword: HA Glass Melter - Loss of Water Hazard

Event Identifier	Initiating Event	Safeguards	Frequency	Hazard Consequence	Worker Consequence	Public Consequence
3200/257	1. Water recirculation lost.	1. Pressure relief valves present in system. 2. Access panels are provided to aid replacement of failed components (Multiple redundancy not considered necessary due to where failure may occur). 4. Water may be re-introduced slowly such that steam is not generated. 5. Methods for re-introduction of water are being considered (Melter power reduction / shut down not possible due to liquidous considerations).	2	1. Feed jacket and nozzle cooling not possible. 2. Water in jacket may boil. 3. Heat loading on cell increased - cell structure challenged. 4. Life of the refractory package may be reduced.	1	1

Study Area/Keyword: HA Glass Melter - Shielding Hazard

Event Identifier	Initiating Event	Safeguards	Frequency	Hazard Consequence	Worker Consequence	Public Consequence
3200/244	1. Potential for aerosols from Melter.	1. Melter should be shielded for full dose.	2	1. Potential for external dose to workers / public.	2	2

Fault Schedule: LAW/HLW Glass Melter

(Sheet 20)

Study Area/Keyword: HA Glass Melter - Ventilation - Challenge due to Generation of Steam Hazard

Event Identifier	Initiating Event	Safeguards	Frequency	Hazard Consequence	Worker Consequence	Public Consequence
3200/247	1. Water cooled component failure.	1. High level chemistry is less onerous than low level glass chemistry.	3	1. Increased steam challenge to ventilation system. 2. Saturation and destruction of HEPA filtration. 3. Consequences of event greater due to higher level of activity than LAW. 4. Challenge to ventilation system. High level melter off-gas release due to water cooled component failure. 5. Acute effect, not significant but chronic effects e.g. enhanced corrosion may be significant.	2	2

Fault Schedule: LAW/HLW Glass Melter

(Sheet 21)

Study Area/Keyword: HA Melter Feed Tanks - Domino (Other Effects) Hazard

Event Identifier	Initiating Event	Safeguards	Frequency	Hazard Consequence	Worker Consequence	Public Consequence
3200/235	1. Corrosion / erosion to downstream pumps due to metal contaminants in process stream. 2. Melter life impaired due to presence of metals in process stream. 3. Quencher effluent material contains highly corrosive substances.	1. None Identified at this time	3	1. Concentration of recirculated insoluble materials will increase. A waste loading / throughput issue.	1	1

Study Area/Keyword: HA Melter Feed Tanks - Effluent / Washing Hazard

Event Identifier	Initiating Event	Safeguards	Frequency	Hazard Consequence	Worker Consequence	Public Consequence
3200/233	1. High solids content liquor.	1. Wash-down facilities. 2. Disposal route may be different to LAW system. 3. Bunded area with appropriate detection to protect against leakage / overspill. 4. Routing control via interlocked valvework. 5. Appropriate administrative controls will be in place.	4	1. Effluent liquor higher than LAW in activity - not a problem if correctly routed and / or contained.	1	1

Fault Schedule: LAW/HLW Glass Melter

(Sheet 22)

Study Area/Keyword: HA Melter Feed Tanks - External Dose Hazard

Event Identifier	Initiating Event	Safeguards	Frequency	Hazard Consequence	Worker Consequence	Public Consequence
3200/215	1. Activity backflow from in-cell mixing vessel to screw conveyor. 2. Dose uptake due to maintenance operations (e.g. replace/maintain agitator). 3. Cs and TRU are present in liquor. 4. This area of the system contains an interface between the active and inactive feed systems.	1. Air purge down feed line to mixing vessel of sufficient pressure to ensure correct displacement of active liquor. 2. Radiolytic heating may be less significant in this vessel. 3. Design accounts for back diffusion of activity and potential shine path. 4. Maintainable equipment may be in a bulge. 5. Routine HP&S surveys. 6. Closed circuit cooling water.	3	1. Breakthrough of activity into cooling water coils. Potential for increased dose uptake to Workers. 2. Activity likely to be higher than LAW.	2	1

Study Area/Keyword: HA Melter Feed Tanks - Fire Hazard

Event Identifier	Initiating Event	Safeguards	Frequency	Hazard Consequence	Worker Consequence	Public Consequence
3200/222	1. Pump motor fire. 2. Electrical fire.	1. Fire loading is restricted in this area.	3	1. Fire.	2	2

Fault Schedule: LAW/HLW Glass Melter

(Sheet 23)

Study Area/Keyword: HA Melter Feed Tanks - Internal Dose Hazard

Event Identifier	Initiating Event	Safeguards	Frequency	Hazard Consequence	Worker Consequence	Public Consequence
3200/216	1. Tank leak. 2. Valve failure due to erosion. 3. Pump catastrophic failure.	1. Active systems are in-cell. 2. Sumps and recovery equipment. 3. Appropriate construction materials will be chosen, fit for duty. 4. Testing regime. 3. Pumps and valves would be decontaminated in-situ to a suitable level for disposal.	3	1. Increased Internal Dose to Workers due to recovery operations. 2. Recovery difficult in the event of tank leak (The option of in-cell tank replacement could involve considerable expense).	1	1

Study Area/Keyword: HA Melter Feed Tanks - Loss of Air Hazard

Event Identifier	Initiating Event	Safeguards	Frequency	Hazard Consequence	Worker Consequence	Public Consequence
3200/231	1. Air supply unavailable.	1. Backup air supplies may be required.	2	1. Loss of level measurement (pneumercators). 2. Loss of valve control. 3. Loss of air purge if used to prevent hydrogen build-up.	1	1

Fault Schedule: LAW/HLW Glass Melter

(Sheet 24)

Study Area/Keyword: HA Melter Feed Tanks - Loss of Containment Hazard

Event Identifier	Initiating Event	Safeguards	Frequency	Hazard Consequence	Worker Consequence	Public Consequence
3200/220	1. Leaking vessels within in-cell side. 2. Overfilling of hopper or in-cell vessels.	1. Sump and recovery of high solids content liquor. 2. Diverse pneumercator level detection in vessel. 3. Inter-vessel and feed forward transfer pump are in bulges. 4. Isolation of pumps in line with appropriate philosophy. 5. Other fluidic transfer devices may be considered.	3	1. Overflow via agitator shaft onto floor resulting in airborne contaminants that would challenge the cell ventilation.	2	2

Study Area/Keyword: HA Melter Feed Tanks - Loss of Power Hazard

Event Identifier	Initiating Event	Safeguards	Frequency	Hazard Consequence	Worker Consequence	Public Consequence
3200/228	1. No agitation of glass former / HLW in vessel.	1. Cooling provided in vessel.	2	1. Settle-out of waste material. Potential for blockage. 2. Potential for additional heat evolution.	1	1

Fault Schedule: LAW/HLW Glass Melter

(Sheet 25)

Study Area/Keyword: HA Melter Feed Tanks - Loss of Process Chemicals Hazard

Event Identifier	Initiating Event	Safeguards	Frequency	Hazard Consequence	Worker Consequence	Public Consequence
3200/232	1. Chemicals for decontamination not introduced (if required).	None ?	2	1. No decontamination possible - not a problem until required.	1	1

Study Area/Keyword: HA Melter Feed Tanks - Loss of Steam Hazard

Event Identifier	Initiating Event	Safeguards	Frequency	Hazard Consequence	Worker Consequence	Public Consequence
3200/229	1. Loss of vessel emptying ejectors (if used).	1. None Identified at this time	2	1. Operability / Recovery problem : Cannot empty vessel.	1	1

Study Area/Keyword: HA Melter Feed Tanks - Ventilation - Vessel Vent Failure Hazard

Event Identifier	Initiating Event	Safeguards	Frequency	Hazard Consequence	Worker Consequence	Public Consequence
3200/221	1. Challenge to ventilation system.	1. C5 vessel vent. 2. Cell will also be vented. 3. Appropriate extract rate will be chosen.	2	1. Potential for overfilling to result in blockage of vessel vent line (refer to Loss of Containment). Increase in entrainment of moisture, possible overloading of demister and filters causing increase in discharge from stack.	2	2

Fault Schedule: LAW/HLW Glass Melter

(Sheet 26)

Study Area/Keyword: HA Melter Feed Tanks- Loss of Water Hazard

Event Identifier	Initiating Event	Safeguards	Frequency	Hazard Consequence	Worker Consequence	Public Consequence
3200/230	1. Wash water unavailable.	1. Wash water header tank is available, sized appropriately. 2. Emergency cooling water supply to melter is available.	2	1. Not a problem, unless Melter unavailable. 2. Cannot flush lines. 3. Cannot cool vessels.	1	1

Study Area/Keyword: Inactive Glass Former Feed System - Corrosion / Erosion Hazard

Event Identifier	Initiating Event	Safeguards	Frequency	Hazard Consequence	Worker Consequence	Public Consequence
3200/126	1. Mis-routing of glass formers. 2. Incorrect addition order of glass formers (Loss of Services (Process Chemicals)). 3. Chlorides in feeds.	1. Seals appropriately specified, together with correct selection of materials. 2. Boric Acid is a weak acid. 3. Order of addition important only when formers added to liquid. 4. Procedural controls upon delivery. 5. Sufficient safeguards to prevent inadvertant addition of materials to the already sampled batch in the mixing silo. 6. Regular inspection and monitoring. 7. Appropriate storage of Boric Acid and other potential corrosives (for example no storage in mild steel vessels / containers).	3	1. Metal contaminants in Melter - reduced melter lifespan. 2. Incorrect blend may result in corrosion. 3. Unusuable mix - must be disposed of. (Disposal / recovery issue see Operability guideword). 4. Uncertainty - It is not known if addition of dry feeds to liquid outside melter will affect product quality.	1	1

Fault Schedule: LAW/HLW Glass Melter

(Sheet 27)

Study Area/Keyword: Inactive Glass Former Feed System - Dropped Load / Impact Hazard

Event Identifier	Initiating Event	Safeguards	Frequency	Hazard Consequence	Worker Consequence	Public Consequence
3200/129	1. Truck impact.	1. Appropriate traffic routing and control arrangements.	3	1. There is no dose conseqence due to this event. There may be potential for release of toxic glass-forming materials.	2	1

Study Area/Keyword: Inactive Glass Former Feed System - Extreme Weather Hazard

Event Identifier	Initiating Event	Safeguards	Frequency	Hazard Consequence	Worker Consequence	Public Consequence
3200/127	1. High rainfall, flooding, snow. 2. Low temperature. 3. Temperature fluctuations during spells of extreme weather. 4. This facility is separate from the main facility; possible additional potential for increased exposure to extreme weather condtions.	1. Protection required will be provided by facility.	3	1. Condensation in silos, etc.,	1	1

(Sheet 28)

Fault Schedule: LAW/HLW Glass Melter

Study Area/Keyword: Inactive Glass Former Feed System - Fire Hazard

Event Identifier	Initiating Event	Safeguards	Frequency	Hazard Consequence	Worker Consequence	Public Consequence
3200/116	1. Ignition of reducing agent (Sugar). 2. Ignition source possibly static electricity due to transfer by compressed air.	1. None of the glass forming feed materials are in any way flammable or explosive, even in finely divided form.	3	1. Fire.	3	1

Study Area/Keyword: Inactive Glass Former Feed System - Loss of Air Hazard

Event Identifier	Initiating Event	Safeguards	Frequency	Hazard Consequence	Worker Consequence	Public Consequence
3200/123	1. Poor air quality. 2. Out of specification parameters - e.g. air contains excess moisture. (Refer to Loss Power.).	1. Backup air supplies. 2. Recovery strategy will be developed to resuspend solids in lines.	2	1. Potential for plug in feed line. 2. Insufficient / incorrect mixing.	1	1

Fault Schedule: LAW/HLW Glass Melter

(Sheet 29)

Study Area/Keyword: Inactive Glass Former Feed System - Loss of Containment Hazard

Event Identifier	Initiating Event	Safeguards	Frequency	Hazard Consequence	Worker Consequence	Public Consequence
3200/114	1. Valve pressure vessel or pump catastrophic failure. 2. Breech of pipework through erosion / corrosion. 3. Seal failure in original packaging. 4. Vendor interface delivery failure. 5. Clog in pipe requiring maintenance. 6. A number of toxic / carcinogenic materials are present in the inactive feed. 7. Zircon is slightly radioactive. 8. Transport of materials by compressed air.	1. Face masks, BA, adequate protective clothing, vacuum cleaners. 2. Handling procedures. 3. Adequate vessel pressure regulation, detection and control. 4. Portable spray system. 5. Dedicated ventilation systems. 6. Filter discharge to atmosphere. 7. Good housekeeping within the facility. 8. Transport of materials by compressed air necessitates vent via filter.	2	1. Potential for contact with toxic glass forming materials. Worker health detriment.	3	1

Fault Schedule: LAW/HLW Glass Melter

(Sheet 30)

Study Area/Keyword: Inactive Glass Former Feed System - Loss of Power Hazard

Event Identifier	Initiating Event	Safeguards	Frequency	Hazard Consequence	Worker Consequence	Public Consequence
3200/122	1. Loss of Power.	1. Automatic valves to move to safe position.	2	1. Loss of ventilation system. 2. Loss of data (mass metering) in glass former feeds. 3. Loss of instrumentation. 4. Potential for powder blockages / clogging.	1	1

Study Area/Keyword: Inactive Glass Former Feed System - Loss of Process Chemicals Hazard

Event Identifier	Initiating Event	Safeguards	Frequency	Hazard Consequence	Worker Consequence	Public Consequence
3200/124	1. Transport system failure. 2. Delivery failure.	1. The system can be idled for an indefinate period. 2. Mixture is sampled prior to inclusion to concentrated LAW feed. 3. Emptying line contingency from the blender silo in the event of an out of specification batch.	2	1. Insufficient / incorrect mix of feeds. 2. Process halted. 3. Product quality adversely affected.	1	1

Fault Schedule: LAW/HLW Glass Melter

(Sheet 31)

Study Area/Keyword: Inactive Glass Former Feed System - Occupational Safety Hazard

Event Identifier	Initiating Event	Safeguards	Frequency	Hazard Consequence	Worker Consequence	Public Consequence
3200/130	1. Manual handling of bags, etc,. 2. Toxicity issues (refer to Loss of Containment Guideword). 3. The area is a high maintenance one.	1. Personal protective equipment. 2. Training. 3. Confinement.	3	1. Personnel injury.	3	1

Study Area/Keyword: Internal Dose Hazard

Event Identifier	Initiating Event	Safeguards	Frequency	Hazard Consequence	Worker Consequence	Public Consequence
3200/161	1. Overfilling of melter.	1. Glass could be removed if not stuck to the floor. 2. Philosophy is to contain, as opposed to prevent, spillage. 3. Cannister is sealed against the discharge chamber. 4. Melter should not be idled hot - potential for Cs and Tc to vapourise and escape.	3	1. Increased Internal Dose to Workers due to recovery operations. 2. Spillage of glass - very little challenge to ventilation system. 3. Cannister and melter could become stuck together - operability problem. 4. Potential for Cs and Tc levels to increase in Off-gas system. Potential for increased dose to Workers and Public due to increased Cs in off-gas.	2	2

Fault Schedule: LAW/HLW Glass Melter

(Sheet 32)

Study Area/Keyword: Loss of Air Hazard

Event Identifier	Initiating Event	Safeguards	Frequency	Hazard Consequence	Worker Consequence	Public Consequence
3200/176	1. Glass enters bubbler.	1. Discharge will halt eventually. 2. Preperation for discharge should be made.	3	1. Glass enters bubbler, bubbler replacement necessary. 2. Air discharge mechanism failed. 3. Glass discharge by this route not possible. 4. Glass foaming - increase in glass level. 5. Potential for involuntary glass discharge even in event of feed system halt.	1	1

Study Area/Keyword: Loss of Containment Hazard

Event Identifier	Initiating Event	Safeguards	Frequency	Hazard Consequence	Worker Consequence	Public Consequence
3200/164	1. Thermocouple guide tube failure. 2. Catastrophic failure in primary containment via melter refectory penetrations. 3. Corrosion of quencher and / or off-gas systems. (Refer to external and internal dose guidewords).	1. Loss of containment due to guide tube failure will not breech secondary containment (i.e. cell). 2. Air cooling of penetrations through refectory walls. Air exhaust into cell.	2	1. Potential for external dose to workers / public.	2	2

Fault Schedule: LAW/HLW Glass Melter

(Sheet 33)

Study Area/Keyword: Loss of Power Hazard

Event Identifier	Initiating Event	Safeguards	Frequency	Hazard Consequence	Worker Consequence	Public Consequence
3200/173	1. Instrument power failure. 2. Melter Off-gas fans supply failure.	1. Melter is diesel backed. 2. Instrument power is UPS backed. 3. The off-gas power supply system will have sufficient reliability to ensure supply.4. Melter glass may take upto 6 to 8 hours to freeze upon loss of power.	2	1. Potential for solidification of glass in melter. 2. Loss of fan supply results in excess steam discharge to cell vent system. 3. Potential for loss of melter parameter indication (loss of instruments).	1	1

Study Area/Keyword: Loss of Process Chemicals Hazard

Event Identifier	Initiating Event	Safeguards	Frequency	Hazard Consequence	Worker Consequence	Public Consequence
3200/177	1. Loss of feed material.	1. The operating level will be set appropriately (refer to Loss of services - air).	2	1. Set melter level is reduced.	1	1

Study Area/Keyword: Loss of Steam Hazard

Event Identifier	Initiating Event	Safeguards	Frequency	Hazard Consequence	Worker Consequence	Public Consequence
3200/174	1. Loss of steam supply to an emptying ejector.	1. Melter has level control.	2	1. Loss of vacuum lift facility for discharge. 2. Discharge via this route not possible.	1	1

Fault Schedule: LAW/HLW Glass Melter

(Sheet 34)

Study Area/Keyword: Loss of Water Hazard

Event Identifier	Initiating Event	Safeguards	Frequency	Hazard Consequence	Worker Consequence	Public Consequence
3200/175	1. Water recirculation lost.	1. Pressure relief valves present in system. 2. Access panels are provided to aid replacement of failed components. 3. Multiple redundancy is not considered necessary due to where the failure may occur. 4. Water may be re-introduced slowly such that steam is not generated. 5. Methods for re-introduction of water are being considered. 6. Melter operating temperature can be reduced or shut down if necessary.	3	1. Feed jacket and nozzle cooling not possible. 2. Water in jacket may boil. 3. Heat loading on cell increased - cell structure challenged. 4. Life of the refractory package may be reduced.	1	1

Study Area/Keyword: Off-Gas - Criticality Hazard

Event Identifier	Initiating Event	Safeguards	Frequency	Hazard Consequence	Worker Consequence	Public Consequence
3200/189	1. Settling out of solids.	1. Addition of liquors may reduce likelihood of hazard. 2. Criticality report (A. Jenkins, NRS) has indicated that there is no potential for such an incident in TWRS-P waste feeds.	1	1. Potential for criticality.	1	1

Fault Schedule: LAW/HLW Glass Melter

(Sheet 35)

Study Area/Keyword: Off-Gas - Domino (Other Effects) Hazard

Event Identifier	Initiating Event	Safeguards	Frequency	Hazard Consequence	Worker Consequence	Public Consequence
3200/206	1. Accumulation of halogens. 2. Scrubber liquor return to LAW Feed Evaporator may present increased halogens.	1. None Identified at this time	3	1. Pressurisation of melter - potential for loss of glass containment / involuntary glass discharge.	1	1

Study Area/Keyword: Off-Gas - Dropped Load / Impact Hazard

Event Identifier	Initiating Event	Safeguards	Frequency	Hazard Consequence	Worker Consequence	Public Consequence
3200/209	1. Dropped scrubber or component during removal.	1. The removal route is not over any of the melters.	2	1. Minimal consequences for any drop.	1	1

Study Area/Keyword: Off-Gas - Effluent / Washing Hazard

Event Identifier	Initiating Event	Safeguards	Frequency	Hazard Consequence	Worker Consequence	Public Consequence
3200/204	1. Disposal route of purge. 2. Purge may be too active to return to ETF.	1. Re-cycle back to LAW feed evaporator.	4	1. Potential for mis-routing of purge liquor. 2. Excessive activity in purge liquor.	1	1

Fault Schedule: LAW/HLW Glass Melter

(Sheet 36)

Study Area/Keyword: Off-Gas - Explosion / Overpressure Hazard

Event Identifier	Initiating Event	Safeguards	Frequency	Hazard Consequence	Worker Consequence	Public Consequence
3200/193	1. Emergency Off-Gas does not relieve.	1. None Identified at this time	2	1. Cotamination spread through the cell.	3	3

Study Area/Keyword: Off-Gas - External Dose Hazard

Event Identifier	Initiating Event	Safeguards	Frequency	Hazard Consequence	Worker Consequence	Public Consequence
3200/187	1. Ineffective quench of off-gas. 2. Maintenance activities (e.g. pumps).	1. Demister is in-cell. 2. Procedural controls. 3. Emergency feed to quench tank is under consideration.	3	1. Increased challenge to metal filters. 2. Increased particulates into demister. 3. Dose uptake to Workers / Public. 4. Potential for discharge to increase. 5. Melter shut-down. 6. Downstream challenge is likely only to be marginal.	2	2

Fault Schedule: LAW/HLW Glass Melter

(Sheet 37)

Study Area/Keyword: Off-Gas - Fire Hazard

Event Identifier	Initiating Event	Safeguards	Frequency	Hazard Consequence	Worker Consequence	Public Consequence
3200/192	1. Potential for Hydrogen or CO evolution. 2. Off-gas chemistry a potential source of CO and H2 evolution.	1. Maintenance activities occur in this high temperature area.	2	1. Fire.	3	3

Study Area/Keyword: Off-Gas - Loss of Air Hazard

Event Identifier	Initiating Event	Safeguards	Frequency	Hazard Consequence	Worker Consequence	Public Consequence
3200/202	1. Film cooler not operational.	1. Ream out solids if necessary.	3	1. Film cooler internals could become clogged if air pressure is lost, and require replacement.	2	2

Fault Schedule: LAW/HLW Glass Melter

(Sheet 38)

Study Area/Keyword: Off-Gas - Loss of Containment Hazard

Event Identifier	Initiating Event	Safeguards	Frequency	Hazard Consequence	Worker Consequence	Public Consequence
3200/190	1. System breech, pressurised line breech. 2. Melter decontamination.	1. Sump is under level control and in-cell. 2. Overpressure in melter brings in emergency off-gas system. This system would have the short term ability to treat these gasses; its use would trip the melter. This prevents loss of containment of off-gas.	2	1. Spray from ejector. 2. Cell challenged by corrosive material. In-cell equipment affected by enhanced corrosion. 3. Potential for etching of glass. Eroded material less likely to be contained. 4. A breech in the system could result in corrosive liquid being sprayed in the cell. 5. In-cell equipment damaged by corrosion.	1	1

Study Area/Keyword: Off-Gas - Loss of Power Hazard

Event Identifier	Initiating Event	Safeguards	Frequency	Hazard Consequence	Worker Consequence	Public Consequence
3200/199	1. Loss of recirculation (unless ejected).	1. Adequate reliability of power supply system with possible use of diesel generators for off-gas supply in the event of a main supply failure.	3	1. Process stopped. 2. High activity discharged to stack.	2	2

Fault Schedule: LAW/HLW Glass Melter

(Sheet 39)

Study Area/Keyword: Off-Gas - Loss of Process Chemicals Hazard

Event Identifier	Initiating Event	Safeguards	Frequency	Hazard Consequence	Worker Consequence	Public Consequence
3200/203	1. Loss of NaOH - Increase in corrosion potential.	1. None Identified at this time	2	1. The present flowsheet does not show the solution in the quencher being neutralised, therefore, the loss of NaOH is not a hazard.	1	1

Study Area/Keyword: Off-Gas - Loss of Water Hazard

Event Identifier	Initiating Event	Safeguards	Frequency	Hazard Consequence	Worker Consequence	Public Consequence
3200/201	1. Continuous water supply to quencher is required for Off-Gas Scrubber.	1. Water can be re-cycled. 1. A time lag exists between loosing the service and it becoming a serious problem.	2	1. Gradual degradation in scrubbing efficiency with repeated water recycling and saturation of liquor. 2. Reduction in off-gas cooling efficiency. 3. Breakthrough of contaminants into downstream system.	2	2

Fault Schedule: LAW/HLW Glass Melter

(Sheet 40)

Study Area/Keyword: Off-Gas - Remote Handling Hazard

Event Identifier	Initiating Event	Safeguards	Frequency	Hazard Consequence	Worker Consequence	Public Consequence
3200/198	1. Breaking and making connections. 2. Seals may not be correctly made.	1. During reaming, or other maintenance activities, a negative pressure must be maintained in the melter. Therefore, the air flow to be maintained via vent system.	3	1. There is a potential for a loss of containment, with subsequent increased dose uptake to facility workers and / or maintainers.	2	1

Study Area/Keyword: Shielding Hazard

Event Identifier	Initiating Event	Safeguards	Frequency	Hazard Consequence	Worker Consequence	Public Consequence
3200/162	None Identified	1. Melter shielded against radiation levels.	1	1. Potential for external dose to workers / public.	1	1

Fault Schedule: LAW/HLW Glass Melter

(Sheet 41)

Study Area/Keyword: Ventilation - Challenge due to Generation of Steam Hazard

Event Identifier	Initiating Event	Safeguards	Frequency	Hazard Consequence	Worker Consequence	Public Consequence
3200/165	1. Water cooled component failure.	1. None Identified at this time	2	1. Increased steam challenge to ventilation system. 2. Saturation and destruction of HEPA filtration. 3. Increased off-gas releases. 4. Acute effect, not significant but chronic effects e.g. enhanced corrosion may be significant.	3	3

5.2.12 LAW Vitrification Offgas Treatment and Emergency Offgas Systems

Vitrification of the LAW takes place in the three joule-heated ceramic melters. The metal oxides in the waste slurry are incorporated into the glass, while the liquid water is vaporized. The resulting steam, along with nitrogen from the bubblers and various acid gases formed by decomposition of the feed slurry components, is fed into the offgas system. Each melter has its own film cooler and quench column. The former cools the gas by direct injection of air and the latter removes most of the particulates that have been entrained in the gas stream. The offgas from the quench column is around 80 °C (175 °F), saturated with water, and contains acid gases including up to 5% nitrogen oxides (NO_x). The offgas also contains radioactivity in the form of entrained aerosols and small particulates. The function of the offgas system is to remove this radioactivity and acid gas content, so that the treated gas can be discharged to atmosphere within environmental discharge limits.

The LAW primary offgas system comprises high efficiency mist eliminators (HEMEs), a selective catalytic reduction (SCR) unit, and a condenser.

These components remove the majority of the radioactivity and virtually all of the NO_x gases. Although the levels of other acid gases are reduced, the wet scrubber in the secondary offgas system removes other acid gases from the LAW offgas.

<u>High Efficiency Mist Eliminator (HEME)</u>

Around 1100 standard m^3 per hour (647 cfm) of gas at 80 °C (176 °F) is discharged from each quench column. This gas has a high radioactivity content, largely in the form of liquid aerosols; 99% of these radioactive liquid aerosols are removed by a HEME. A HEME is a plate filter, made up of very fine glass fibers. As the gas passes through the HEME the aerosols, and any small particles that were not removed by the quench column, are trapped by the fibers and are removed from the gas system. Aerosols caught in the mesh agglomerate into droplets, which drain downwards to reduce the risk of reentrainment by the gas that flows upward through the HEME.

The HEME needs to be washed daily to prevent accumulation of particles. A nozzle in the HEME vessel supplies the backwashing spray. Vessel V3321 acts as a collection vessel for any droplets which form and drain from the HEME during normal operation. The sump vessel empties by RFD pump P3302, and the washing liquids return to the LAW melter feed evaporator.

Each melter has its own HEME line with a backup because the HEME cannot be used during washing. Including the backups, there are six HEME in the whole LAW offgas system, G3301 – G3306. While a HEME is shut down it is isolated by a sealpot on its inlet, V3301 – V3306. The sealpot is a pressure vessel through which the gas flows, entering through a pipe whose open end is near the bottom of the vessel and leaving at the top. When the vessel is filled with water, the pressure of the liquid provides a hydraulic seal that prevents gas flow. There is also a single sealpot at the outlet of each pair of HEME, V3311 – V3313. This sealpot can be used to isolate the HEME system for a melter when maintenance or a filter change is required.

Selective Catalytic Reduction (SCR) Unit

The offgas streams from the HEME are combined into a single stream after the outlet sealpots. The large gas stream here has low radioactivity, but high acid gas content. The stream has a particularly high level of NO_x gases, since the parent nitrate compounds are not removed by the melter. The rate of NOx gas formation can be up to 5 Mt (5.5 tons) per day, compared to a total Hanford Site limit (for all facilities including the TWRS-P Facility) of 40 Mt (44 tons) per year.

The NO_x gases are removed by an SCR unit, where the nitrogen oxides are reacted with ammonia at an elevated temperature (250-350 °C [482-662 °F]). The reaction products are the harmless gases nitrogen and steam. The reaction occurs in a catalyst bed in column C3301, packed with alumina beads impregnated with a metal oxide catalyst. Before entering the catalyst bed, the gas is preheated, first in a heat exchanger E3301 heated by the column exhaust gases, then in an electric heat exchanger, E3302. The ammonia is added after the first heat exchanger. The temperature is already over 200 °C (392 °F), which is too high to allow ammonium nitrate to form. Ammonium nitrate is an explosive compound; the potential for its formation needs to be eliminated wherever possible.

The catalyst bed fluidizes during operation; i.e., the velocity of the gas stream passing through the bed causes the catalyst granules to become buoyant, and move around quite freely. As a result the particles in the bed start to behave more like a liquid than a collection of solid objects, and the level of mixing in the bed is very high. The motion also causes scouring of the surface of the alumina granules, which greatly reduces the opportunity for radioactivity buildup. The dust produced by the erosion of the granules is carried out of the column through the heat exchanger, and is removed by the condenser (C3302) and wet scrubbers (C3601) downstream.

The reaction between nitrogen oxides and ammonia is exothermic, and can cause an excessive temperature rise if the concentration of NO_x in the inlet gas is too high. To dilute the NO_x there is an inbleed of air before the first heat exchanger. The air must be preheated to prevent condensation and mist formation in the ductwork. The air is preheated in heat exchanger E3303.

Ammonium bisulfate may form in the SCR unit if the inlet concentration of sulfur trioxide (SO_3) is too high. The potential for excessive SO_3 in the gases is currently being investigated.

Condenser/Wet Scrubber

The gas stream leaving the SCR heat exchanger is at around 140 °C (284 °F), with a dewpoint of over 50 °C (122 °F). The dewpoint is lower than it was immediately after the quench column, since a large volume of dilution air was added before the SCR unit. The gas stream still contains too much acid gas and activity to allow discharge to atmosphere. It is cooled to around 40 °C (104 °F) in a condenser (C3302), that removes the majority of the water vapor present, and also significantly reduces the level of radioactivity and acid gases. The liquid effluent from the condenser has low enough radioactivity to allow discharge to the ETF. The liquid effluent is stored in a buffer vessel (V3320), where it combines with any other offgas liquid effluents, including condensates from the HLW offgas stream. The liquid effluent will then be pumped to the process condensate collection vessels (V9306A/B) before discharge to the ETF.

The offgas from the condenser still contains traces of radioactivity and acid gases. The radioactivity and acid gas levels is too high to allow discharge to atmosphere. The gas stream is treated for both of these contaminants in the secondary offgas system.

Pressure Control

The offgas stream described in the previous three sections requires more vacuum than can easily be provided by the main offgas exhaust fans. Therefore, a booster fan or blower (K3310A/B) is required and is located after the condenser.

There are six fixed air inbleeds and four controlled air inbleeds into the LAW offgas train.

1) Three fixed melter air inbleeds, one into each melter, give bubbling, mixing, and ensure oxidation.
2) Three fixed film cooler air inbleeds, cool the gas streams and prevent molten glass particles from solidifying and depositing on the walls of the ductwork.
3) One dilution air inbleeds into the gas stream immediately before the SCR heat exchanger. This inbleed is controlled by the temperature of the exhaust gases (an increase in the temperature increases the inbleed air flow since the air acts as a heat sink in the SCR).
4) Each of the three melter offgas streams includes an air inbleed, immediately after the HEME outlet seal pots. Varying the air flows here varies the HEME outlet pressures; this in turn helps to maintain the pressure in the melters at the required 10 m bar_g. The pressure in the melters controls these inbleeds.

A constant pressure is maintained using a variable speed fan, the speed of which is controlled by the pressure where the three streams join in the melters.

LAW/HLW Vitrification Emergency Offgas System

The two HLW melters and three LAW melters all have their own dedicated offgas treatment lines. An extra safety feature, the emergency offgas systems, will treat the offgasses in the following cases:

1. Overpressurization of the melter during normal operation, resulting from variation in the offgas generation rate
2. Blockage of a film cooler, quench scrubber, HEME or associated ductwork
3. Shutdown and maintenance of the offgas system, when the melter requires ventilation

The emergency offgas is designed to be used very infrequently. The primary and secondary offgas ducting is designed to take surge flows of 50% above normal gas flowrate. When the pressure in a melter rises, its feed is stopped, which will normally prevent overpressurization. The emergency offgas system is only activated in case of unusually high pressure.

There is one emergency offgas line for each of the three LAW melters and one for the HLW melter. The LAW emergency offgas system and the HLW emergency offgas line have the same basic design.

In all of the descriptions that follow, plant items with a number format beginning with [letter]33 are in the LAW system, and ones beginning with [letter]43 are in the HLW system.

Ducts connect the melters to isolation dampers, one for each melter. These isolate the melters from the emergency offgas lines during normal operation. They are activated by high pressure in the melter, and open to allow gas flow when the melter pressure rises above 5 $mbar_g$. (The melter will normally operate at -5 $mbar_g$.) Immediately downstream of the dampers, air is injected into the gas streams. The air volume is regulated to limit the temperature of the diluted stream to 150 °C (302 °F) in each case. This cools the gas stream to below the softening point of the entrained glass particulates, to protect downstream equipment.

The diluted gas streams each pass through to a HEPA filter, G3331-3/G4331, which is a cartridge filter made up of fine fibers or ceramic. Deposited solids are removed from the filter by backblowing with compressed air after or during use. The pressure drop across the filter is continuously measured during operation to check that the filter is not clogging. If the pressure drop becomes too high, the cartridge is washed, or if the pressure drop cannot be recovered by washing, the cartridge must be replaced. Particles removed from the filter by backblowing fall down into the base of the vessel, where they are washed out and drain down to a sump vessel V3331/V4331. V3331 is common to all three LAW gas streams. The sump is monitored for level, and when it is full it is emptied by an RFD, P3331/P4331, to the contaminated condensate tank, V9308, in the central effluent handling area of the plant. After washing, the filters are dried. The drying air is heated electrically by heaters E3331/E4331.

The pressure drop across the emergency offgas lines is less than across the corresponding main line. To avoid excessively low pressure in the melter, the streams pass through vortex amplifiers, L3331-3/L4331, that have process air fed in at varying rates. The vortex amplifier is another highly reliable fluidics device (no moving parts) used in BNFL nuclear facilities. The operation is based on the Coriolis effect. The air rates control the pressure drops. These will allow the system to stabilize after the pressure surge; a vortex amplifier is used to maintain the melter pressure at the desired level until the original reason for the emergency offgas system being used is corrected. At this point, the isolation damper can be closed, and the main offgas system is used again.

After filtration the three LAW streams combine. The common LAW emergency stream and the single HLW stream then both rejoin their respective main offgas treatment systems. The LAW stream rejoins the main stream at the inlet to the condenser, C3302, and the HLW stream rejoins the main stream at the inlet to the iodine removal column, C4302. Removal of oxides of nitrogen and acid gas takes place downstream.

5.2.12.1 LAW Vitrification Offgas Treatment and Emergency Offgas Systems Study Areas and Hazard Evaluation Teams

The pre-meeting team of process and safety engineers designated the following as hazard evaluation study areas based on PFD 1614672:

1) De-mister operation
2) Removal of oxides of nitrogen
3) Condensing and offgas treatment

The members of the hazard evaluation team scheduled to study the LAW vitrification offgas treatment (excluding the emergency backup system) and their respective disciplines are listed as follows:

J. Kisalu – Safety, Team Leader
S. Webb – Process
G. Booth – ventilation
M. Knight – BNFL
G. Jones – Safety, Scribe
I. Roberts – Control and Instrumentation
M. Coleman – Process
N. Bailey – Mechanical

The emergency backup ventilation system was reviewed separately as a single study area using PFD 1614687 as a primary source of information. The hazard evaluation team selected to study the emergency backup system and their respective disciplines are listed as follows:

G. Sutherland – Team Leader
I. Roberts – Instrumentation and Control
M. Colman – Process
S. Webb – Process
N. Bailey – Mechanical
P. Brand – Research and Development
B. Wallace – Secretary

Fault Schedule: LAW Vitrification Off-Gas Treatment

(Sheet 1)

Study Area/Keyword: Corrosion / Erosion Hazard

Event Identifier	Initiating Event	Safeguards	Frequency	Hazard Consequence	Worker Consequence	Public Consequence
1614672/223	1. Seal liquor will be concentrated with chlorides and fluorides from off-gas. 2. Off-gas is also corrossive. 3. Catalyst particles can cause erosion of SCR vessel and heat exchangers.	1. Self draining lines. 1200 ppm HF potential. 2. Sufficient vessel thickness - takes into account erosion.	3	1. Potential for loss of containment. Potential for loss to cell. 2. Increased dose uptake to Workers. 3. Residual halides may be present. 4. Acid aerosols from vessel vent.	2	2

Study Area/Keyword: Decontamination Hazard

Event Identifier	Initiating Event	Safeguards	Frequency	Hazard Consequence	Worker Consequence	Public Consequence
1614672/216	1. Maintenance operations.	1. Wash rings on V3320, seal pots and other vessels. 2. Flush lines are provided. 3. Low activity system, thereofre hands on-maintenance operations may be possible.1. Hands on maintenance possible due to	4	1. None Identified at this time	1	1

Fault Schedule: LAW Vitrification Off-Gas Treatment

(Sheet 2)

Study Area/Keyword: Domino (Other Effects) Hazard

Event Identifier	Initiating Event	Safeguards	Frequency	Hazard Consequence	Worker Consequence	Public Consequence
1614672/224	1. SCR maloperation affects melter throughput by tripping feeds. 2. NOX discharge limits could be exceeded.	1. SCR maloperation caused by HEME blockage. Hence, HEME change-over on high pressure drop.	3	1. Pressurisation of melter - potential for loss of glass containment / involuntary glass discharge. 2. HEME change-over could cause pressure transient in all 3 melters. 3. Active particulate carry-over to condenser collected in V3320 and sentenced.	2	2

Study Area/Keyword: Dropped Load / Impact Hazard

Event Identifier	Initiating Event	Safeguards	Frequency	Hazard Consequence	Worker Consequence	Public Consequence
1614672/254	1. Loading catalyst - overfilled / too quickly. 2. Change of filter cartridge.	1. Appropriate lifting gear will be provided. 2. Catalyst will be removed by pneumatic means. 2. Approporate control of operations over lifting and removal. (Considered further during the detailed design stage).	2	1. None Identified at this time	1	1

Fault Schedule: LAW Vitrification Off-Gas Treatment

(Sheet 3)

Study Area/Keyword: Explosion / Overpressure Hazard

Event Identifier	Initiating Event	Safeguards	Frequency	Hazard Consequence	Worker Consequence	Public Consequence
1614672/239	1. Compressed air supply fault to Metal Filters. 2. Fan failure. 3. Damper failure. 4. Failure of cooling water. See Loss of Services (Entry no. 1614673/321). 5. NH3 and NOX can form Ammonium Nitrate below 180 C. 6. Explosion due to carry-over of ammonium nitrate.	1. Melter pressure surges are directed to the Emergency off-gas system. 2. Blockage of HEME or Metal Filter would initiate standby path or emergency off-gas path. 3. Standby fan. 4. Damper failure to safe state. 5. Relief lines on cooling water lines. 6. Emergency off-gas designed to take maximum pressure due to 50% above normal flowrate. 7. Margin justified by experience of similar systems. 8. Temperature control to isolate NH3 flow below 200C. 9. Alkaline conditions maintained: Supression of Ammonia, NO3. 10. Protection provided for SCR unit. 11. System parameters are controlled to prevent formation of Ammonium Nitrate. 12. Pressures insufficient to cause NH3 fire. 13. Gas entering scrubber is only in the region of 50 degC - loss of cooling will not overpressurise. 14. Selected process is shown to be the optimum of alternatives. 15. Process monitored by operator.	2	1. Overpressurisation metal filter. 2. System pressurised. 3. Condenser not cooing. 4. Scrubber not cooled. Steam in scrubber. 5. Pressurisation of all three melters due to common cause considered unlikely. 6. Blockage of heme would initiate standby heme or emergency off-gas path. 7. Potential for loss of containment of hazardous materials and / or activity from cell. Potential for activity release from explosion.	3	3

Fault Schedule: LAW Vitrification Off-Gas Treatment

(Sheet 4)

Study Area/Keyword: Fire Hazard

Event Identifier	Initiating Event	Safeguards	Frequency	Hazard Consequence	Worker Consequence	Public Consequence
1614672/238	1. NH3 is a potential fuel source. 2. Oil for burner is a potential fuel source. 3. Fire in fan motor.	1. Fans are enclosed in casings - standby fan unaffected by fire in operating fan. 2. Fire load restricted in area. 3. Electrical heating has been examined and is the preferred option.	3	1. Potential for in-cell fire.	2	1

Study Area/Keyword: Internal Dose Hazard

Event Identifier	Initiating Event	Safeguards	Frequency	Hazard Consequence	Worker Consequence	Public Consequence
1614672/207	1. Condenser pipe leak. 2. Blow-back through HEPA filter from fan. 3. Pressurisation of system. 4. Equipment is located outside cell.	1. Oil burner combustion air is ducted in. 2. HEME performance (DF = 100) monitored by pressure drop. 3. Downstrem ventilation systems designed for corrosive off-gas. 4. Radiation levels are likely to be low. 5. Equiment downstream not affected if HEMEs are off-line.	3	1. Increased Internal Dose to Workers.	2	2

Fault Schedule: LAW Vitrification Off-Gas Treatment

(Sheet 5)

Study Area/Keyword: Loss of Air Hazard

Event Identifier	Initiating Event	Safeguards	Frequency	Hazard Consequence	Worker Consequence	Public Consequence
1614672/219	1. Loss of dilution air leading to high temps and bunout of catalyst in short-term. 2. Loss of air purge to instruments. 3. Loss of fluidic transfer devices.	1. Use of bypass. 2. Flow instrumentation to detect loss of dilution air. 3. Control philosophy to be developed to incorporate actions on loss of dilution air e. g. initiation of bypass, shutdown of melter feeds etc. 4. Bottle backed air supply.	2	1. Loss of instrument air system could lead to plant shutdown.	1	1

Study Area/Keyword: Loss of Containment Hazard

Event Identifier	Initiating Event	Safeguards	Frequency	Hazard Consequence	Worker Consequence	Public Consequence
1614672/210	1. HEME Washings. 2. Chlorides in feeds. 3. Breakthrough accross heat exchangers. 4. Leaking pumps or fans.	1. Heme washings directed to feed evaporator. 2. Delta P measurements would warn of loss of containment. 3. Chlorides etc. makes material selection a problem. 4. Catalyst retained by mesh screens. 5. Negative pressure in system. 6. Leakages downstream of P3301 collected in bunded area.	2	1. Potential for overfilling HEMEs with wash-water. Potential for washings to be released to cell (following failure of vessel). 2. Ventilation system efficiency - impact on ventilation system to be determined.- Standard provisions currently assumed. 3. Breakthrough accross heat exchangers. Only E3302 affected - reduces efficiency.	1	1

Fault Schedule: LAW Vitrification Off-Gas Treatment

(Sheet 6)

Study Area/Keyword: Loss of Power Hazard

Event Identifier	Initiating Event	Safeguards	Frequency	Hazard Consequence	Worker Consequence	Public Consequence
1614672/218	1. Loss of power to heaters. 2. Loss of power to fans and scrubber pump.	1. Diesel back-up for fans and scrubber pump. 2. Entire system needs to be diesel backed to be compatible with melter. 3. Scrubber pump tripped on high temp. 4. Cooling water make-up not required.	3	1. Condensation and blockage. 2. Fan loss leads to loss of depression. 3. Loss of cooling water flow.	2	2

Study Area/Keyword: Loss of Process Chemicals Hazard

Event Identifier	Initiating Event	Safeguards	Frequency	Hazard Consequence	Worker Consequence	Public Consequence
1614672/247	1. Loss of Ammonia 2. Loss of Caustic	1. Ammonia flow measurement and NOX discharge conc. meaurement. 2. Iodine scrubber in off-gas system.	3	1. Ammonia loss renders SCR ineffective. Potential for increased discharges of NOx. 2. Potential for Iodine release if caustic supply lost.	2	2

Fault Schedule: LAW Vitrification Off-Gas Treatment

(Sheet 7)

Study Area/Keyword: Loss of Water Hazard

Event Identifier	Initiating Event	Safeguards	Frequency	Hazard Consequence	Worker Consequence	Public Consequence
1614672/221	1. Loss of process water.	1. None Identified at this time	3	1. Loss of Process Water - unable fill seal pot. 2. Cannot isolate the running of the duty route. 3. Reduced HEME efficiency - unable to wash HEME. 4. Inability to washout vessels - operability problem.	2	2

Study Area/Keyword: Remote Handling Hazard

Event Identifier	Initiating Event	Safeguards	Frequency	Hazard Consequence	Worker Consequence	Public Consequence
1614672/217	1. HEPA filter G4303 changed manually. 2. G4304 is a manual change.	1. HEME cartidges removed and replaced remotely.	4	1. None Identified at this time	1	1

Fault Schedule: LAW Vitrification Off-Gas Treatment

(Sheet 8)

Study Area/Keyword: Ventilation - Oil Burner Exhaust Challenge Hazard

Event Identifier	Initiating Event	Safeguards	Frequency	Hazard Consequence	Worker Consequence	Public Consequence
1614672/237	1. Challenge to Ventilation system.	1. Clean air supply for oil burner with discharge route for exhaust e.g. to secondary off-gas system. 2. Tank V3320 will vent to scrubber. 3. Conrol philosophy will interact with main extract fans.	2	1. None Identified at this time	1	1

Fault Schedule: LAW Vitrification Emergency Off-Gas System

(Sheet 1)

Study Area/Keyword: Corrosion / Erosion Hazard

Event Identifier	Initiating Event	Safeguards	Frequency	Hazard Consequence	Worker Consequence	Public Consequence
1614687/178	1. Chlorides and flourides are present in feed.	1. Selection of appropriate materials for construction of plant (M&FTS to be consulted).	3	1. Potential for leakage of off-gas.	2	2
1614687/199	1. Off-gas chemical interaction.	1. HLW chemistry is more benign than LAW - there is a reduced likelihood of damage in this system.	3	1. Corrosion / erosion leading to loss of containment of HLW off-gas.	2	2

Study Area/Keyword: Decontamination Hazard

Event Identifier	Initiating Event	Safeguards	Frequency	Hazard Consequence	Worker Consequence	Public Consequence
1614687/174	None Identified	Wash rings on all vessels	4	1. None Identified at this time	1	1

Fault Schedule: LAW Vitrification Emergency Off-Gas System

(Sheet 2)

Study Area/Keyword: Domino (Other Effects) Hazard

Event Identifier	Initiating Event	Safeguards	Frequency	Hazard Consequence	Worker Consequence	Public Consequence
1614687/179	1. Complete failure of all systems. 2. Damper close failed.	1. If this system failed, discharges to stack would still be within spec. day limit. 2. Discharge of glass; melter feed would then be switched off as this is necessary to use the emergency line. 3. Flush lines through after melter feeds are stopped - creats steam.	3	1. Discharge outside limits to stack - low level discharges of NOx. it is unlikely that annual discharge limits will be exceeded. 2. Melter overpressuriation. 3. Loss of this system will affect the mainatnaiblity of the other system.	2	2

Study Area/Keyword: Dropped Load / Impact Hazard

Event Identifier	Initiating Event	Safeguards	Frequency	Hazard Consequence	Worker Consequence	Public Consequence
1614687/181	1. Damper or filter cartrdige dropped.	1. None Identified at this time	2	1. Damage/shattering of filters if these are dropped. The fragility of filters is not known, nor is how they may break or shatter but may behave the same as glass.	1	1
1614687/202	1. Cartridge dropped during lift.	1. Cartridge is lighter than LAW, line size down to a twelve inches in diamter.	2	1. None Identified at this time	1	1

Fault Schedule: LAW Vitrification Emergency Off-Gas System

(Sheet 3)

Study Area/Keyword: Effluent / Washing Hazard

Event Identifier	Initiating Event	Safeguards	Frequency	Hazard Consequence	Worker Consequence	Public Consequence
1614687/198	1. Disposal of effluents / washings.	1. Washings sent to HLW sump tank form pre-treament.	4	1. None Identified at this time	1	1

Fault Schedule: LAW Vitrification Emergency Off-Gas System

(Sheet 4)

Study Area/Keyword: Explosion / Overpressure Hazard

Event Identifier	Initiating Event	Safeguards	Frequency	Hazard Consequence	Worker Consequence	Public Consequence

Fault Schedule: LAW Vitrification Emergency Off-Gas System

(Sheet 5)

1614687/171	1. Simulataneous overpressurisation in all three LAW melters. 2. Reaction in-line considered causing melter pressurisation.	1. There are three independant off-gas systems able to cope with simultaneous overpressurisation (multiple failures would have to occur). 2. Overpressurisation due to in-line reactions is considered unlikely. 3. Potential for the build-up of radiolytic hydrogen to explosive concentrations to be prevented, i.e. using passive protection (e.g. a deterministic approach involving provision of vessel vent with appropriate sizing / configuration such that LEL cannot be reached with credit not taken for active ventilation systems). 4. Potential for significant radiolytic hydrogen production is low (reference: calculations performed by D. Vickers action at Hanford TWRS-P PHA+ Studies) confirming that for large volume vessels, the time taken to reach 1% hydrogen in air varies from tens of hours to several days with no credit taken from active ventilation systems. 5. Overpressurisation would occur when : (a). Surge occurs with line blockage. (b). Simultaneous blockage of quench, film cooler and 16" line. (c). Surge with failure of damper. (Safe failure modes of dampers and valves will be considered in detailed design). Radiolytic hydrogen is less significant due to dilution effects.	2	1. Overpressre in line. Potential for explosion. Potential for increased dose uptake to workers.	3	3

Fault Schedule: LAW Vitrification Emergency Off-Gas System

(Sheet 6)

Study Area/Keyword: External Dose Hazard

Event Identifier	Initiating Event	Safeguards	Frequency	Hazard Consequence	Worker Consequence	Public Consequence
1614687/164	1. Gross failure of filter system. 2. Leakage from liquid effleunt vessel or associated lines and sump. 3. Gross / frequent melter pressurisation. 4. Maintenance operations (removal of filter - break of containment necessary).	1. Three independant systems are provided - one for each melter. 2. Pressure drop in vessel not likely to be high enough to cause high back pressure in vessel. 3. Melter pressurisation would only result in loss of containment hazard if several upstream item failures occurred simultaneously (in addition to filter - not considered likely). 4. Valve and filter should be located on bulge to prevent back diffusion. 5. Emergency off-gas system availability maintained at all times. 6. Filter failure detected by drop in pressure differential. 7. Vessel base washed out once per month.	3	1. Increased dose uptake by Workers or Public. 2. Poential for back flow or diffusion of activity into process air system.	2	2

Fault Schedule: LAW Vitrification Emergency Off-Gas System

(Sheet 7)

1614687/185	1. Gross failure of filter system. 2. Leakage from liquid effleunt vessel or associated lines and sump. 3. Gross / frequent melter pressurisation. 4. Maintenance operations (removal of filter - break of containment necessary).	1. Pressure drop in vessel not likely to be high enough to cause high back pressure in vessel. 2. Melter pressurisation would only result in loss of containment hazard if several upstream item failures occurred simultaneously (in addition to filter - not considered likely). 3. Valve and filter should be located on bulge to prevent back diffusion. 4. Emergency off-gas system availability maintained at all times. 5. Filter failure detected by drop in pressure differential. 6. Vessel base washed out once per month.	3	1. Increased dose uptake by Workers or Public (dose may be higher than LAW when). 2. Poential for back flow or diffusion of activity into process air system.	2	2

Study Area/Keyword: Extreme Weather Hazard

Event Identifier	Initiating Event	Safeguards	Frequency	Hazard Consequence	Worker Consequence	Public Consequence
1614687/180	None Identified	1. Stack designed for high wind speeds etc. 2. Loss of water due to extreme cold temperature.1. The loss of water from a burst lines, etc., could be tolerated for a few days.	3	1. No hazard consequence identifed - facility assumed to cater for prevalent weather conditions.	1	1

Fault Schedule: LAW Vitrification Emergency Off-Gas System

(Sheet 8)

Study Area/Keyword: Fire Hazard

Event Identifier	Initiating Event	Safeguards	Frequency	Hazard Consequence	Worker Consequence	Public Consequence
1614687/191	1. Ignition of paper cartridge in paper HEPA filter.	1. All fluidic devices in this area, no pumps, therefore restricted potential for an ignition source. 2. Fire loading is restricted. 3. Process gas may not be of sufficient temperature to cause ignition.	3	1. Increased stack discharges. Potential for increased dose uptake to public.	2	2

Study Area/Keyword: Internal Dose Hazard

Event Identifier	Initiating Event	Safeguards	Frequency	Hazard Consequence	Worker Consequence	Public Consequence
1614687/165	1. Filter change operations.	1. Filter change unlikely during lifetime of plant. (filter change may be required following upstream plant maloperation). 2. Filter washed before changing. 3. No sampling in system, except during filter cartridge change (remote operation).	3	1. Potential for dose uptake following filter change operation.	2	1
1614687/186	1. Filter change operations.	1. Filter change unlikely during lifetime of plant. (filter change may be required following upstream plant maloperation). 2. Filter washed before changing. 3. No sampling in system, except during filter cartridge change (remote operation).	3	1. Loss of high efficiency metal filter may lead to emissions in excess of advised discharge limit.	1	2

Fault Schedule: LAW Vitrification Emergency Off-Gas System

(Sheet 9)

Study Area/Keyword: Loss of Containment Hazard

Event Identifier	Initiating Event	Safeguards	Frequency	Hazard Consequence	Worker Consequence	Public Consequence
1614687/168	1. HEME Washings. 2. Chlorides in feeds. 3. Breakthrough accross heat exchangers. 4. Leaking pumps or fans.	1. Heme washings directed to feed evaporator. 2. Delta P measurements would warn of loss of containment. 3. Chlorides etc. makes material selection a problem. 4. Catalyst retained by mesh screens. 5. Negative pressure in system. 6. Leakages downstream of P3301 collected in bunded area.	4	1. Potential for overfilling HEMEs with wash-water. 2. Ventilation system efficiency - impact on ventilation system to be determined.- Standard provisions currently assumed. 3. Breakthrough accross heat exchangers. Only E3302 affected - reduces efficiency.	2	1

Fault Schedule: LAW Vitrification Emergency Off-Gas System

(Sheet 10)

1614687/189	1. Leakage, etc., (in scrubber). 2. HEME washings directed to Feed Evaporator. 3. Activity breakthrough to LP steam line. 4. Metal filter collapse.	1. Pressure differential measurement to warn of loss of containment. 2. Level measurement on Metal Filter container. 3. Sump tank is located in shielded container. 4. LP steam is monitored. 5. Fine particulate in Nitric washings from HE Metal Filter to ensure that blockage does not occur. 6. Agitation may be applied on vessel V4305. 7. Appropriate isolation applied on inactive feeds. 8. In-cell equipment placed in cladded cell - Remainder in bunded area. 9. Caustic is mild in the scrubber. 10. Low activity downstream of iodine adsorption unit.	2	1. Excess dampness to Metal Filter - reduced efficiency. Potential for increased stack discharges. Increased dose uptake to public.	2	2

Fault Schedule: LAW Vitrification Emergency Off-Gas System

(Sheet 11)

Study Area/Keyword: Loss of Services Hazard

Event Identifier	Initiating Event	Safeguards	Frequency	Hazard Consequence	Worker Consequence	Public Consequence
1614687/176	1. Loss of process air. 2. Loss of power. 3. Loss of water.	1. Electrical supplies are battery backed. 2. Feeds are shut down to melter if electrical supplies to the off-gas system failed. 3. Air supplies are backed up. 4. Loss of water not a problem - four hours to wash filers. 5. Load schedule and service analysis ongoing. 6. Emergency supplies are provided by Bechtel.	3	1. Loss of valves, instrumentation, transfer and dampers (actuation).	1	1
1614687/197	1. Loss of power or air.	1. None Identified at this time	3	1. Delay in restart (refer to operability) - also applies to LA and HA. 2. Effectiveness of filter is lost if it is wet.	2	2

Study Area/Keyword: Occupational Safety Hazard

Event Identifier	Initiating Event	Safeguards	Frequency	Hazard Consequence	Worker Consequence	Public Consequence
1614687/182	None Identified	1. None Identified at this time	4	1. None Identified at this time	1	1

Fault Schedule: LAW Vitrification Emergency Off-Gas System

(Sheet 12)

Study Area/Keyword: Remote Handling Hazard

Event Identifier	Initiating Event	Safeguards	Frequency	Hazard Consequence	Worker Consequence	Public Consequence
1614687/175	1. Filters and dampers replaced remotely (Filter system on all process air lines). 2. Possible removal of ejectors on the effleunt tank.	1. Adequate isolaton on valve (refer to maintainability).	4	1. Remote handling issues.	1	1

Study Area/Keyword: Ventilation - Heat Rejection Challenge Hazard

Event Identifier	Initiating Event	Safeguards	Frequency	Hazard Consequence	Worker Consequence	Public Consequence
1614687/190	1. Challenge to Ventilation system.	1. Extra cooling requiremetns taken into account during detailled design.	3	1. Potential for increased heat load challenge to ventilation system.	1	1

5.2.13 HLW Melters

Feed System

The feed to the two HLW melters consists of a slurry of concentrated HLW sludge received from HLW ultrafiltration, strontium and TRU precipitate, cesium ion exchange eluate, technetium ion exchange eluate, and a blended mixture of dry glass-forming chemicals. The purpose of the HLW feed system is to receive, weigh, and blend the dry glass-forming chemicals; mix the dry chemicals with the concentrated HLW feeds; feed the resultant slurry to the HLW melter; and distribute the slurry across the melt pool surface.

Glass Former Receipt and Weighing

A common receipt and weighing system serves both the LAW and HLW melter systems. The glass-forming chemicals will be delivered to the Hanford Site in bulk by truck. The dry chemicals will be pneumatically unloaded from the truck and conveyed into individual storage silos. The storage silos will be located outside the main TWRS-P Facility in order to provide ease of truck access and minimize the inactive tankage located inside the facility.

The HLW feed system is designed to be capable of producing different feed recipes to accommodate variations in the composition of waste feed.

Glass-Former Blending

Blending of the HLW glass formers is undertaken in the HLW melter blending transporter vessel, V3208. The vessel, is sized to blend a batch of dry chemical feed to supply the HLW melter for 24 hours. The blending transporter is fitted with a pneumatic blending head located in the discharge cone. The blending cone is supplied with compressed air from the plant air system.

Once all of the weighed ingredients of a batch have been conveyed into the blending transporter, compressed air is introduced to the vessel through a pneumatic blending head. The blending control system opens and closes air valves to the blending head, causing air to be introduced to the vessel in pulses. These pulses cause the dry chemical contents of the vessel to be agitated and blended. The required number of pulses is determined as part of the system testing program. However, the system should be able to produce an acceptable blend of glass formers within a relatively short period of time.

Once the blending sequence has been completed, samples are withdrawn from the blending transporter and sent for analysis to confirm that the batch is within specification. Following sample acceptance, V3208 is cleared to be discharged into the HLW melter blended chemical Feed Hopper, T-4201. The inlet, discharge, and vent valves are closed and compressed air introduced to pressurize the vessel. When the required transport pressure is reached, the discharge valve is opened and the entire contents of V3208 are discharged to T-4201.

HLW Melter Feed Preparation System

Concentrated Envelope D waste feed and other HLW feeds from pretreatment including strontium and TRU precipitate, Cs ion exchange eluate, and Tc ion exchange eluate are batched into the HLW melter feed preparation vessel, V-4201 (8,9 m^3). The HLW feeds have been mixed and sampled prior to receipt in V-4201. The batch volume received is equivalent to one 24-hour operation of the HLW melter.

Vessel V-4201 is fitted with a mechanical agitator. Dry chemicals are metered from the hopper, T-4201, through a double-lock hopper, T-4202, directly into the eye of the mixer impeller. The action of the impeller produces a slight vacuum on the hopper that assists the flow of dry chemicals. A pump recirculation of the vessel contents is also provided through the HLW feed transfer pump, P-4201 A/B, to assist with overall vessel mixing.

The feed lock hopper is fitted with double block valves on its discharge to prevent backflow from the feed preparation vessel when chemicals are not being fed. The lock hopper is located in a bulge, or cabinet, to prevent potential contamination of the operating area.

Once the waste and dry chemicals have been blended, a sample is withdrawn and submitted for analysis to confirm that the composition conforms to the acceptable product quality envelope. When sample acceptability has been confirmed, the entire contents are transferred by the feed transfer pump, P-4201 A/B, to the HLW melter feed vessel, V-4202 (10.4 m^3). Each HLW Melter Feed Vessel is fitted with two feed pumps, P-4202 A/B and P-4203 A/B. The exact type of pump to be used has yet to be determined. Consideration will be given to using fluidic pumps for all HLW applications because of the specific gravity of the feed. Each pump supplies feed to two water-cooled feed nozzles on the melter. A total of four feed nozzles are provided.

The rate of feed incorporation into the melted glass varies with many parameters including feed composition and the temperature distribution across the melted glass surface. The rate of heat transfer to the melted glass surface is a function of the degree of mixing achieved in each area of the melted glass pool through a combination of natural convection and agitation. Failure of agitation in one area of the melter may cause accumulation of feed on the melted glass pool surface in that area (cold cap formation) unless the feed rate to that area can be reduced. This is accomplished by having separate feed pumps supplying different zones of the melter. The exact method of controlling the feed rate to the different areas has yet to be determined.

HLW Melter System

The HLW melter system consists of two melters each with a design throughput of 1.5 Mt (1.65 tons) glass per day and a minimum availability of 60 percent. The internal dimensions of each melter are to be approximately 2.5 m by 1.5 m (8.2 ft by 4.9 ft) yielding a melt surface area of 3.75 m^2 (40 ft^2). The depth of the glass pool is 1.5 m (4.9 ft), the bottom of which is sloped toward the center line at a 45 ° angle. The volume of glass contained in a full melter is 5.6 m^3 (1.5 Kgal) weighing about 14 Mt (15.4 tons). The entire melter including the supporting structure and transport mechanism weighs approximately 130 Mt (143 tons). The melter will have integral water cooling panels on the sides, top, and bottom to reduce the heat load to the cell and extend the life and reliability of the refractory.

Process Description

The HLW melter is an electric-powered, joule-heated, slurry-fed melter. The melter is capable of producing a nominal 1.5 Mt/day (1.65 tons/day) of HLW glass. The operating temperature of the melter is approximately 1150 °C (2100 °F). The residence time of the glass product in the melter is approximately 9 days.

Feed is pumped from the HLW Melter Feed Vessel, V-4202, by the two feed pumps, P-4202 A/B and P-4203 A/B, and distributed across the molten glass surface by four water-cooled feed nozzles.

In the melter, the feed flows across the molten glass surface and forms a “cold-cap” on the surface of the melt. In the cold-cap, water is first evaporated from the feed and released to the offgas system as superheated steam, the feed components then undergo chemical reaction and decomposition.

Most of the feed components are converted to their oxides which dissolve in the molten glass.

During the decomposition process, gases are formed, and released into the melter plenum and offgas system. In addition, a fraction of the feed components are directly carried over to the offgas without incorporation in the glass, particularly submicron particulates. Some components are fairly volatile in the melter and a significant fraction of these materials is released to the offgas. The solids and semivolatile components are recycled back to the melter from the offgas system to increase the incorporation rate for these components in the glass.

Electrical Configuration

The electrical configuration is driven by the need to allow both the removal of noble metals from the melter and to allow their accumulation in the bottom of the melter without causing electrical shorting.

The electrical configuration of the HLW melter consists of two pairs of plate electrodes mounted parallel to each other on the long walls of the melter, and a bottom electrode located on the floor of the melter. The buses penetrate the refractory and the melter shell below the glass level to prevent sulfidation, and close to the center line of the long side of the melter to minimize problems from thermal expansion.

The HLW melter power is driven by a temperature feedback loop that uses several thermocouples within the glass pool and refractories. The power is supplied by dry-type transformers located below the melter cell with remote bus connectors inside the cell to facilitate melter changeout.

Refractory Package

The refractory package serves as a physical, thermal, and electrical barrier between the molten glass inside the melter and the metal containment shell of the melter. The refractory package is divided into two distinct parts: below glass level (actually extends above the normal operating level to allow for level changes and upset conditions), and above glass level (plenum area).

The melter refractory package below the glass level consists of three layers: glass contact refractory, backup refractory, and an electrical isolating barrier. This package, used in conjunction with active cooling provided by a water jacket, provides physical glass containment, thermal insulation, and electrical isolation. Glass migration through the refractory package is limited by establishing an isotherm within the glass contact refractory to solidify the glass and prevent further migration. The refractory package is designed to provide adequate containment in the event of temporary loss of cooling. Prolonged operations without cooling may lead to premature corrosion of refractory materials and additional heat load to the cell.

The refractory package above the glass level, around the plenum area, differs from that of the refractory package below the glass level only at the hot surface refractory material. In the plenum, the hot surface refractory must withstand greater thermal cycling and aggressive vapors, but not be constantly eroded by the glass. Typical plenum refractories are high-silica or high-alumina (Monofrax H) bricks, known for their thermal shock resistance.

Thermal expansion within the refractory package is accommodated externally by an expandable water jacket.

Glass Discharge

Glass is discharged from the HLW melter is through one of two discharge chambers. Each chamber is designed to be capable of discharging at the full design production rate (1.5 Mt [1.65 ton] of glass per day). Two chambers are provided for redundancy. Discharge is achieved by transferring glass from the bottom of the melter pool through a riser into a discharge chamber and subsequently pouring it into a canister.

Discharge by gas lift is achieved by bubbling gas through an Inconel tube into an Inconel riser situated within the glass pool. The riser and the bubbler tube are replaceable to mitigate the problems of plugging and corrosion. Glass lifted from the bottom of the glass pool flows down a trough through the melter wall above the glass level and into a discharge chamber. During discharge, the discharge chamber is heated by lid-mounted heating elements to prevent the glass from cooling. Glass entering the discharge chamber flows freely down the discharge trough and pours into a canister, positioned below at the canister filling station. Controlling the rate of bubbling is by the rate of discharge. At the end of the required discharge operation, gas bubbling is stopped and the pouring discontinued once the glass residue in the trough has discharged.

Spontaneous discharges have been noted with similar discharge arrangements as a result of a foaming incident or a melter pressurization that causes glass to overflow into the discharge chambers. This will be prevented by providing adequate head height between the glass melt level and the discharge trough. In addition, gases other than air, such as nitrogen and carbon dioxide, are being evaluated to determine if discharge from foaming can be controlled by changing the reduction-oxidation state of the glass in the discharge riser.

Discharge chambers are positioned at either end of the melter in the middle of the short walls so that the glass can be removed from the bottom of the melter. The location is driven by the shape of the melter floor which slopes toward the middle between the long sides of the melter.

If the melter must be drained, such as for final disposal, the glass level would be lowered as far as possible using the gas lift risers, then the remaining glass would be removed using evacuated canisters. In the event that glass could not be removed through the gas lift risers, the entire contents would be removed via evacuated canisters. Any remaining glass of noble metal sludge would taken to the melter cut-up cell with the failed melter.

Melter Containment and Lid Design

Melter confinement is provided by the melter shell. This shell provides a containment barrier for the glass and maintains a negative pressure difference with respect to the cell to prevent gaseous releases to the cell and to prevent air in-leakage from the cell into the melter. The shell supports water cooling panels that are held against the refractory package to remove heat from the refractory and reduce the heat load to the cell. Penetrations through the outer shell are sealed by appropriate gaskets and flanges that allow remote removal and replacement. The outer shell is fabricated to permit ease of removal, where practical, to facilitate melter dismantlement in a remote environment.

The lid of the HLW melter performs several functions. The lid is fully sealed to the melter shell in order to provide vapor containment. The lid must provide a support structure through which sub-components can be mounted. The lid must also be cooled to minimize heat loss from the melter to the cell and prevent sulfidation of the metal lid components.

The melter lid design is a 304L stainless steel outer shell and water jacket that is insulated from the melter plenum by a thick layer of refractory material. Either a castable refractory material or prefired tongue-and-groove brick is used to insulate the lid. Presently, the prefired brick is favored based on the durability of the brick and its resistance to spalling. Depending on the penetrations through the lid, it may be difficult to fabricate using bricks. This lid design allows for the typical “hot” plenum at temperatures of approximately 600 °C (1112 °F) while feeding and up to 1050 °C (1922 °F) during idling.

Structural Support

The HLW melter box described above is supported by a structure of support beams. It is envisioned that this framework will include an integral trolley system which will facilitate remote melter changeout on a rail system.

5.2.13.1 HLW Melter Study Areas and Hazard Evaluation Team

Due to the similarities between the HLW and LAW melter systems, the LAW melter system drawings were used for both studies. The hazard evaluation study of the HLW melter would use the LAW study as reference. Differences were drawn between the two melters as the team members proceeded through the What-If/Checklist, noting deviations to the LAW melter operation. The differences were then used to determine if a deviation particular to the HLW melter could result. Information available to the study participants included the 50% Conceptual Design Description of the melter feed system, the melters, and the primary offgas system, section views, line diagrams, and the following PFDs:

1) LAW & HLW Vitrification Glass Former Blending (PFD 3200)
2) LAW Vitrification Feed Preparation (PFD 3220)
3) LAW Vitrification and Offgas Quenching (Process description is addressed in the following section) (PFD3240)

In the pre-meeting, the LAW melter study areas determined for review by the hazard evaluation team were the HLW melter feed tanks, and the HLW melter system.

5.2.13.2 HLW Melter Fault Schedules – See Section 5.2.11.2

5.2.14 HLW Vitrification Offgas Treatment System

The main plant components in the HLW primary offgas system for each melter are the:

1) Offgas Film cooler
2) Offgas quencher
3) High efficiency mist eliminators (HEME)
4) High Efficiency metal filter (HEMF)
5) Iodine Adsorption unit
6) Condenser
7) Wet scrubber

These remove the majority of the radioactivity, and virtually all of the NO_x gases. The levels of other acid gases are reduced, by the main removal unit, the wet scrubber.

<u>Primary Offgas System</u>

The primary offgas system exhausts gases from the melter plenum, maintains the melter at a negative pressure relative to the cell, removes gross particulate carryover from the melter into the offgas, and cools the offgas prior to further treatment. Solids removed from the offgas stream and scrubbed radionuclides are recycled back to the melter feed. The primary offgas system consists of three major components: the film cooler (E4201), the offgas quencher (E4202), and the offgas quencher sump (V4203).

The offgas from the HLW melter consists of a mixture of radioactive and nonradioactive gases, vapors, and solids that result from the thermal processes occurring in the melter. Nitrogen and oxygen are the major nonradioactive components of the offgas as a result of air in-leakage to the melter and the operation of the airlift and recirculators or bubblers, as well as from the chemical decomposition reactions occurring in the melter. The next major nonradioactive components are superheated steam as a result of evaporation of water in the feed slurry and NO_x from decomposition of metal nitrates and nitric acid fed to the melter. The HLW melter NO_x levels are much lower than the levels in the LAW melters. Chloride, fluoride, and SO_x are also present resulting from feed decomposition, again at low levels compared to LAW. A small fraction of the feed material is also carried over into the offgas, particularly submicron particulate from the cold-cap. The major radionuclides that are present in the offgas are cesium and technetium, which are fairly volatile in the melter and are carried over into the offgas.

The offgas from the melter exits the melter at approximately 600 °C (1112 °F) and is mixed with air in the HLW offgas film cooler, E-4201. The film cooler is effectively a double-walled pipe designed to introduce compressed air axially along the walls of the offgas pipe through a series of vanes or slots in the inner wall. The film of air flows along the pipe wall, cools the offgas, and minimizes the deposition of solids. The air introduced via the film cooler also provides dilution of the offgas, which reduces vaporization in the quencher. The offgas is cooled to approximately 400-500 °C (752-932 °F) in the film cooler.

From the film cooler, E-4201, the offgas passes to the HLW offgas quencher, E-4202. The purpose of the quencher is to treat the offgas to remove gross particulate carryover from the melter, to remove soluble radionuclides from the offgas, and to further cool the offgas.

An ejector-venturi scrubber has been selected as the preferred type of quencher based on its ability to achieve a high efficiency of scrubbing for particulate. It is also favored because of its compact size relative to other designs of quencher and hence, is more amenable to remote replacement.

Liquid from the HLW quencher sump, V-4203, is sprayed into the quencher, E4202, by the HLW quench recycle pump, P-4204 A/B, drawing in contaminated gas by means of the ejector action of the high-velocity liquid spray into a venturi throat. The venturi throat is a high-turbulence zone where maximum gas-liquid contact and mixing occur. This intimate contact results in very efficient scrubbing of the offgas. A small fraction of the recirculated liquor is evaporated in the quencher providing the required cooling of the offgas. The diverging section is designed to regain as much of the system energy as possible and to reagglomerate the scrubbing liquid droplets for ease of entrainment separation.

The cleaned gases with entrained contaminated droplets discharge from the quencher into the HLW quencher sump, V-4203, where the gases and liquids separate. The cleaned offgasses are withdrawn from the sump through a mist eliminator and are passed on for further offgas treatment. The deentrained liquid collects in the quencher sump from which it is recycled through the ejector-venturi scrubber. A fraction of the scrubber liquid is also recycled back to the melter feed vessel V4101C to recover solids, cesium, and technetium. The HLW offgas quencher, E-4202, cools the offgas from approximately 500-80 °C (932-176 °F).

High Efficiency Mist Eliminator and High Efficiency Metal Filter

Around 480 standard m^3 per hour (283 cfm) of gas at 80 °C (176 °F) is discharged from the quench scrubber. This gas has a high radioactivity content, largely in the form of liquid aerosols; 99% of the radioactive liquid aerosols are removed by a HEME. A HEME is a plate filter, made up of very fine glass fibers. As the gas passes through the HEME, G4301A/B, the aerosols, and any small particles that were not removed by the quench, are trapped by the fibers and are removed from the gas stream. Aerosols caught in the mesh agglomerate into droplets, which drain downwards to reduce the risk of reentrainment by the gas that flows upward through the HEME.

The HEME removes 99% of the radioactivity, but this efficiency is not enough for the HLW offgas stream. Further particulate removal is required, and this can be provided by a HEMF, G4303A/B. This is a very fine fiber metal filter, usually candle shaped, that removes 99.99% of particulates, including those in the submicron-size range. Unlike the HEME, it cannot operate in a wet environment, so the gas needs to be heated (E4301A/B) to well above its dewpoint before filtration.

The HEME and HEMF both need to be washed regularly, probably daily to prevent accumulation of particles. Since neither can be used during washing, both have a backup. While one HEME and HEMF stream is shut down, it is isolated by a sealpot V4301A/B and V4322A/B on its inlet. This is a pressure vessel through which the gas flows, entering through the top of the vessel, and leaving through a pipe, the open end of which is near the bottom. When the vessel is filled with water, the pressure of the liquid provides a hydraulic seal that prevents gas flow.

The HEME and HEMF are washed by backwashing spray, with a nozzle in each vessel to supply the water. After washing, the water drains down through the HEME and HEMF and into a sump vessel, V4304 and V4301C, respectively. Vessel V4304 will also act as a collection vessel for any droplets which form and drain down from the HEME during normal operation. The sump vessel is emptied by RFD pump P4301, and the washing liquids returned to the HLW feed tank V4101C. After washing, the HEMF needs to be dried, and this is achieved by drawing air in through its preheater and through the HEMF. After the HEMF, the drying air combines with the main process gas stream.

The washing water in the HEMF is at a reasonably high pressure, over 48 kPa (7 psi [0.5 bar]) to clean the filter element adequately. A sealpot cannot hold this pressure in, so a valve needs to be used on the outlet from each HEMF. This can also be used to isolate the whole line when maintenance or a filter change is required.

Iodine Adsorption Unit

Although most of the activity in the HLW offgas is in the form of particulates and aerosols, there is a significant quantity of iodine-129 present in the form of both elemental iodine and organic iodide vapors. The quantity is very low, but still high enough to exceed the discharge limit, particularly since iodine will not be removed by the rest of the offgas system. A dry adsorption unit, C4301, is used to remove the iodine from the gas stream. It is likely that a silver-based adsorbent, either silver nitrate-impregnated-silica gel or silver-exchanged zeolite, will be used to remove over 98% of the iodine gas. The sorbent bed is changed periodically (less than once every year), and can be disposed of as a solid waste, since the silver iodine product is stable.

Condenser/Wet Scrubber

The gas stream leaving the iodine adsorption unit is at around 120 °C (224 °F), with a dewpoint of 80 °C (176 °F). It still contains too much acid gas and activity to allow discharge to atmosphere. The gas will be cooled to about 40 °C (104 °F) in a shell-and-tube condenser, E4303, that removes the majority of the water vapor present, and will also significantly reduce the level of both radioactivity and acid gases. The liquid effluent from the condenser has a low enough activity to allow discharge to the ETF. It is drained to the HL off-gas effluent vessel, V4305, where it is combined with offgas liquid effluents from the caustic scrubber (C4302), then pumped to the process coordinate collect vessels V9306A/B for sampling and discharge to the ETF.

The offgas from the condenser still contains traces of radioactivity and acid gases. The radioactivity level is too high to allow discharge to atmosphere, and the acid gas level may be at the very highest levels. The gas stream is treated for both of these contaminants in a caustic scrubber, C4302. The scrubber will reduce the radioactivity levels by a factor of 100, and remove acid gases, including NO_x, adequately. It also removes any carbon dioxide present, including the radioactive form of CO_2, whose level in the HLW offgas is too high to allow discharge. Like iodine and tritium (in the form of tritium steam), it is not removed by the HEME or HEMF, so it requires the caustic scrubber for its removal. Tritium in the HLW offgas stream is removed adequately by the condenser and wet scrubber.

Pressure Control

The offgas stream described in the previous three sections requires more vacuum than can easily be provided by the main offgas exhaust fans. Therefore, a booster fan or blower (K4301A/B) is required, and is located after the condenser.

There are two fixed-air inbleeds into the HLW offgas train. The first of these inbleeds is into the melter to give bubbling mixing and ensure oxidation, and the second is into the film cooler, to cool the gas stream and prevent molten glass particles solidifying and depositing on the walls of the ductwork. Pressure in the melter is controlled by an air inbleed at the inlet to the exhaust fan, which is regulated by the pressure in the melter itself.

5.2.14.1 HLW Vitrification Offgas Treatment System Study Areas and Hazard Evaluation Team

The study areas are the HEME, HEMF, iodine absorption, and melter offgas scrubber.

The PFD providing the information used by the hazard evaluation team to study the HLW Vitrification Offgas Treatment System is 1614673 (PFD 4300). The emergency back-up ventilation system is reviewed as single area of study using PFD ID 1614689 (PFO 4310). The hazard evaluation team members and respective disciplines are listed as follows:

J. Kisalu – Safety, Team Leader
M. Knight – Process
N. Bailey – Mechanical
S. Webb – Process
M. Coleman – Process
I. Roberts – Control and Instrumentation
G. Sutherland – Safety (Scribe)

Fault Schedule: HLW Vitrification Off-Gas Treatment

(Sheet 1)

Study Area/Keyword: Decontamination Hazard

Event Identifier	Initiating Event	Safeguards	Frequency	Hazard Consequence	Worker Consequence	Public Consequence
1614673/318	1. Ag leach out after disposal of solid waste from adsorption column. 2. Decontamination operations before maintenance.	1. Wash rings on seal pots and other vessels.1. Disposal requirements for the adsorption materials is under review.	4	1. None Identified at this time	1	1

Study Area/Keyword: Domino (Other Effects) Hazard

Event Identifier	Initiating Event	Safeguards	Frequency	Hazard Consequence	Worker Consequence	Public Consequence
1614673/326	1. Failure of fans, scrubber. 2. Metal filter failure.	1. Volume of system is in comparison to downstream systems. Therefore, negligible potential to upset system.	3	1. Melter throughput adversely affected. 2. Activity in condensate and scrubber.	1	1

Fault Schedule: HLW Vitrification Off-Gas Treatment

(Sheet 2)

Study Area/Keyword: Dropped Load / Impact Hazard

Event Identifier	Initiating Event	Safeguards	Frequency	Hazard Consequence	Worker Consequence	Public Consequence
1614673/304	1. Iodine cartridge and filter change. 2. Fan or fan motor dropped. 3. Valve dropped.	1. Appropriate lifting gear will be provided. 2. Safe working practices and procedures. 3. The adequacy of change operations will be considered further during the detailed design stage.	2	1. Dropped load on G4303 - potential activity released in a C3 area.	3	2

Study Area/Keyword: Effluent / Washing Hazard

Event Identifier	Initiating Event	Safeguards	Frequency	Hazard Consequence	Worker Consequence	Public Consequence
1614673/324	1. Disposal route for effluent / washings.	1. Route identified for the effluents and washings.	4	1. None Identified at this time	1	1

Fault Schedule: HLW Vitrification Off-Gas Treatment

(Sheet 3)

Study Area/Keyword: External Dose Hazard

Event Identifier	Initiating Event	Safeguards	Frequency	Hazard Consequence	Worker Consequence	Public Consequence
1614673/282	1. Filter and cartridge change. 2. Continuous melter operation. 3. High activity present : HLW off-gas is 1000 greater in activity than LAW.	1. Air in-bleed located inside ventilated cabinet outside cell. 2. All process equipment in this area located in-cell. 3. Regular washing required and cartridges replaced as necessary. 4. Change during routine maintenance operation.	3	1. Back-contamination form air in- bleed.	2	1
1614673/308	1. Dose uptake due to exposure during iodine adsorption cartridge change. 2. Radiation dose due to activity breakthrough.	1. Iodine cartridge need be changed only infrequently. 2. Other than iodine adsorption system, sufficient shielding is provided by metal casing on caustic scrubber, etc., 3. Area monitoring warning of high radiation levels. 4. Iodine adsorption unit is located in cell due to the build up of iodine with time.	4	1. Dose uptake to Workers / Public.	1	1

Fault Schedule: HLW Vitrification Off-Gas Treatment

(Sheet 4)

Study Area/Keyword: Extreme Weather Hazard

Event Identifier	Initiating Event	Safeguards	Frequency	Hazard Consequence	Worker Consequence	Public Consequence
1614673/302	1. High rainfall, flooding, snow. 2. Low temperature. 3. Temperature fluctuations during spells of extreme weather. 4. High wind on ventilation system.	1. Protection required will be provided by facility. 2. System designed for design high wind speeds.	3	1. No hazard consequence identifed - facility assumed to cater for prevalent weather conditions.	1	1

Study Area/Keyword: Fire Hazard

Event Identifier	Initiating Event	Safeguards	Frequency	Hazard Consequence	Worker Consequence	Public Consequence
1614673/288	1. Ignition of paper cartridge in paper HEPA filter in cell vent. 2. Potential for ignition of Hydrogen / Ammonia in process off-gases.	1. All fluidic devices in this area, no pumps, therefore restricted potential for an ignition source. 2. Fire loading is restricted. 3. Iodine adsorption material (zeolite) is mineral, therefore non-flammable. 4. Process gas may not be of sufficient temperature to cause ignition.	2	1. Fire.	3	3

Fault Schedule: HLW Vitrification Off-Gas Treatment

(Sheet 5)

Study Area/Keyword: Internal Dose Hazard

Event Identifier	Initiating Event	Safeguards	Frequency	Hazard Consequence	Worker Consequence	Public Consequence
1614673/309	1. Condenser pipe leak. 2. Blow-back through HEPA filter from fan. 3. Pressurisation of system.	1. All equipment in cell. 2. Gamma monitor on cooling water circuit. 3. Leakage may be directed to bunded area. 4. HLW feed are chemically less aggressive than the LAW stream (e.g. 5te/day NOx c.f. 150kg/day in HLW).	3	1. Activity to C3 area from system. 2. Increased Internal Dose to Workers due to maintenance operations.	2	1

Study Area/Keyword: Loss of Air Hazard

Event Identifier	Initiating Event	Safeguards	Frequency	Hazard Consequence	Worker Consequence	Public Consequence
1614673/295	1. Loss of air purge to instruments. 2. Loss of fluidic transfer devices.	1. Bottle back-up for instrument air. 2. Loss of an RFD can be tolerated for a short period.	2	1. Loss of air actuated valves and instruments. 2. Contamination to previously clean instrument lines. 3. Loss of compressed air to Metal Filter would result in filter becoming blocked earlier. 4. Air lift, valves, dampers, are lost.	1	1

Fault Schedule: HLW Vitrification Off-Gas Treatment

(Sheet 6)

Study Area/Keyword: Loss of Containment Hazard

Event Identifier	Initiating Event	Safeguards	Frequency	Hazard Consequence	Worker Consequence	Public Consequence
1614673/286	1. Leakage, etc., (in scrubber). 2. HEME washings directed to Feed Evaporator. 3. Activity breakthrough to LP steam line. 4. Metal filter collapse.	1. Pressure differential measurement to warn of loss of containment. 2. Level measurement on Metal Filter container. 3. Sump tank is located in shielded container. 4. LP steam is monitored for activity. 5. Fine particulate in Nitric washings from HE Metal Filter may need design provision to ensure that blockage does not occur (a detail design issue). 6. Agitation may be applied on vessel V4305. 7. Appropriate isolation should be applied on inactive feeds. 8. In-cell equipment placed in cladded cell - Remainder in bunded area. 9. Caustic is mild in the scrubber. 10. Low activity downstream of iodine adsorption unit.	3	1. Excess dampness to Metal Filter - reduced efficiency, increased discharges.	2	2

Fault Schedule: HLW Vitrification Off-Gas Treatment

(Sheet 7)

Study Area/Keyword: Loss of Power Hazard

Event Identifier	Initiating Event	Safeguards	Frequency	Hazard Consequence	Worker Consequence	Public Consequence
1614673/320	1. Fans are lost. 2. Entire system needs to run continuously to support continuous melter operation.	1. Fans are diesel backed.	3	1. Loss of power here would result in the loss of instrumentation.	2	2

Study Area/Keyword: Loss of Process Chemicals Hazard

Event Identifier	Initiating Event	Safeguards	Frequency	Hazard Consequence	Worker Consequence	Public Consequence
1614673/298	1. Loss of Nitric Acid . 2. Loss of Caustic.	1. None Identified at this time	3	1. Loss of Nitric leads to C-14 not efficiently scrubbed. 2. Loss of Nitric Acid - unable to clean Metal Filter. 3. Temporary increase in activity discharge. 4. Loss of Caustic leads to ?	2	2

Fault Schedule: HLW Vitrification Off-Gas Treatment

(Sheet 8)

Study Area/Keyword: Loss of Steam Hazard

Event Identifier	Initiating Event	Safeguards	Frequency	Hazard Consequence	Worker Consequence	Public Consequence
1614673/296	1. Loss of LP steam - blinding of filters. 2. Loss of HP steam - cannot use RFDs.	1. None Identified at this time	3	1. Metal filter DFs are seriously degraded. Increased discharges from stack. 2. Cannot change-over from duty to standby.	2	2

Study Area/Keyword: Loss of Water Hazard

Event Identifier	Initiating Event	Safeguards	Frequency	Hazard Consequence	Worker Consequence	Public Consequence
1614673/321	1. Loss of Process Water.	1. None Identified at this time	2	1. Loss of Process Water - unable fill seal pot. 2. Cannot isolate the running of the duty route. 3. Reduced HEME efficiency - unable to wash HEME. 4. Inability to washout vessels - operability problem. See explosion / overpressure. (Entry no. 1614672/239).	1	1

Fault Schedule: HLW Vitrification Off-Gas Treatment

(Sheet 9)

Study Area/Keyword: Occupational Safety Hazard

Event Identifier	Initiating Event	Safeguards	Frequency	Hazard Consequence	Worker Consequence	Public Consequence
1614673/305	1. Cartridge replacement (HEME / HEMF).	1. Cartridge replacement is a remote operation (in cell). 2. Standard procedures and practices.	4	1. Surface temp may rise above 40C during fault conditions.	1	1

Study Area/Keyword: Remote Handling Hazard

Event Identifier	Initiating Event	Safeguards	Frequency	Hazard Consequence	Worker Consequence	Public Consequence
1614673/293	1. Periodic change-out of filter cartridges.	1. HEME and Metal Filter cartridges removed and replaced remotely. 2. HEPA filter replaced remotely. 3. HEPA filter G4303 changed manually. 4. G4304 is a manual change.	4	1. Potential for dose uptake during maintenance operations.	1	1

Study Area/Keyword: Shielding Hazard

Event Identifier	Initiating Event	Safeguards	Frequency	Hazard Consequence	Worker Consequence	Public Consequence
1614673/284	None Identified	All equipment is in-cell. Levels and instruments are purged. Ultimate high instrument located on seal pot to prevent overfilling.	3	1. Potential for external dose to workers / public.	1	2

5.2.15 LAW/HLW Secondary Offgas Treatment System

This section will treat gases arising from the following systems:

1) LAW primary offgas treatment
2) HLW primary offgas treatment
3) Vessel ventilation
4) RFD exhausts
5) Pulse jet mixer exhausts

Within the Secondary Offgas System these streams are subject to final cleanup and filtration before being discharged to atmosphere through a stack.

Gaseous effluents are generated in several areas of the TWRS-P Facility:

1) Melter offgasses from the decomposition of nitrates, nitrites, hydroxides, phosphates, sulfates, carbonates, combustion of organics, evaporation of water, and air in-bleeds to the melter and film cooler
2) Exhausts from RFDs used for transfers and pulse jet mixer systems
3) Vessel vents (primarily made up of pneumercator air and vessel filling)

Offgas from the LAW and HLW melters are treated in the LAW and HLW primary offgas system. The RFD exhausts, pulse jet mixer exhausts, and vessel ventilation offgasses are collected into a common header. The combined stream is then passed through one of two HEMEs (G3601A/B) to remove entrained droplets and particulate. The HEMEs work on a duty-standby basis, and each HEME has inlet and outlet sealpots (V3601A/B and V3602A/B) to allow isolation for maintenance and replacement purposes. The treated stream is then combined with the combined HLW and LAW primary offgas streams. The HEMEs require routine washing to remove the buildup of particulates. The effluent generated from the washing operation are collected in vessel V3603 and transferred using RFO P3601 to vessels V9308, for recycle to the LAW feed evaporator.

The LAW and new melter primary offgasses are combined with the other off-gas. The combined offgas stream is then passed through a counter-current scrubbing column (C3601). The purpose of C3601 is to perform a final cleanup of the offgas and to cool the offgas stream down, thus lowering the water content. Column C3601 is a packed column and is provided with an integral sump to collect scrubber liquor. The sump tank is provided with cooling coils to cool the contents to approximately 30 °C (86 °F). The cooling coils are supplied with chilled water. Liquor is recirculated to the top of the scrubbing column using a pump (P3622). Fresh makeup water is added to the top of the column and the sump tank continuously overflows to vessel V3320.

After leaving the scrubbing column the offgas passes through the HEPA preheater where the gases are heated to above their dewpoint to prevent condensation within the HEPA filters. The HEPA preheater is electrically powered, with spare elements installed to provide the required level of redundancy. After heating, the offgas passes through primary and secondary HEPA filters and then through one of two exhaust fans before discharge to atmosphere.

The utility requirements for the secondary offgas treatment system are:

Chilled Water Supply/Return
Process Air
Instrument Air
High Pressure Steam
Plant Wash Systems
Process Water

5.2.15.1 LAW/HLW Secondary Offgas Treatment System Study Areas and Hazard Evaluation Team

This process and operation shown on PFD 1614671 (PFD 3600) was designated as a study area in the pre-meeting. The various ventilation systems are combined into single exhaust duct upstream of the stack; the hazard evaluation team was to consider any interaction between the ventilation systems (e.g., flow reversal, loss pressure of differential).

The hazard evaluation team members and respective disciplines are listed as follows:

J. Kisalu – Safety (Team Leader)
M. Knight – BNFL
N. Bailer – Mechanical
G. Sutherland – Safety (Scribe)
S. Amin – Research and Development
B. Bucknell – Process
I. Roberts – Control and Instrumentation
G. Booth – Ventilation
S. Webb – Process
M. Coleman – Process

Fault Schedule: LAW/HLW Secondary Off-Gas Treatment

(Sheet 1)

Study Area/Keyword: Decontamination Hazard

Event Identifier	Initiating Event	Safeguards	Frequency	Hazard Consequence	Worker Consequence	Public Consequence
1614671/343	1. Solids deposited in the base of scrubber.	1. HEMEs, Metal Filters eliminate any solids.	4	1. None Identified at this time	1	1

Study Area/Keyword: Domino (Other Effects) Hazard

Event Identifier	Initiating Event	Safeguards	Frequency	Hazard Consequence	Worker Consequence	Public Consequence
1614671/351	1. Failure of vent fans. 2. Minimal ventilation through stack with dampers open.	1. Melter ventilation would still be possible (Investigated with OR model).	3	1. No ventilation of Melter. Loss of ventilation to Melter is covered under 3200/173, loss of power hazard.	1	2

Study Area/Keyword: Dropped Load / Impact Hazard

Event Identifier	Initiating Event	Safeguards	Frequency	Hazard Consequence	Worker Consequence	Public Consequence
1614671/354	1. Change-over of HEME cartridges. 2. Handling of tank agitator.	1. Mechanical handling equipment may be required to change electrical heater elements.	3	1. None Identified at this time	1	1

Fault Schedule: LAW/HLW Secondary Off-Gas Treatment

(Sheet 2)

Study Area/Keyword: Explosion / Overpressure Hazard

Event Identifier	Initiating Event	Safeguards	Frequency	Hazard Consequence	Worker Consequence	Public Consequence
1614671/340	1. HEME Overpressurised.	1. Two delta P measurement on wet scrubber (one on pack one on demister pad). 2. Pressure measurement on vessel vent system. 3. Delta-p across HEME.	3	1. Pressurisation of ventilation system upstream of vessel vent HEME, leading to loss of containment and potential increase dose uptake to workers.	2	2

Study Area/Keyword: External Dose Hazard

Event Identifier	Initiating Event	Safeguards	Frequency	Hazard Consequence	Worker Consequence	Public Consequence
1614671/333	1. HEME change during maintenance. 2. High activity levels - twice that of LAW off gas.	1. Vessel vent, RFD exhaust and associated HEME are located in cell (no potential exists for activity ingress). 2. Seal pot V3605 and scrubber are out cell. 3. Both extract fans could be shut off if required.	4	1. Dose uptake to Workers / Public.	1	1

Fault Schedule: LAW/HLW Secondary Off-Gas Treatment

(Sheet 3)

Study Area/Keyword: Fire Hazard

Event Identifier	Initiating Event	Safeguards	Frequency	Hazard Consequence	Worker Consequence	Public Consequence
1614671/339	1. Hydrogen in system. 2. Electrical heater fault.	1. Hydrogen to be diluted to under 1% at points of origin (hydrogen LFL is 4%.). 2. Further dilution in secondary off-gas. 3. The fire load in this system is restricted.	3	1. Electrical fire.	2	2

Study Area/Keyword: Internal Dose Hazard

Event Identifier	Initiating Event	Safeguards	Frequency	Hazard Consequence	Worker Consequence	Public Consequence
1614671/334	1. Potential for Iodine Generation - due to adverse chemical reaction - 2. Continuous operation of system is required.	1. Levels and DPs on sump pots. 2. HEME DF of approx. 100, together with a further DF of 100 for the scrubber. 3. If Iodine removal required, this unit will be sited after E3601.1. Local controls will be in place to prevent iodine generation, and flow to the secondary off gas system.	3	1. Increased Internal Dose to Workers and / or Public.	2	2

Fault Schedule: LAW/HLW Secondary Off-Gas Treatment

(Sheet 4)

Study Area/Keyword: Loss of Containment Hazard

Event Identifier	Initiating Event	Safeguards	Frequency	Hazard Consequence	Worker Consequence	Public Consequence
1614671/337	1. Evaporation of liquor from seal pot.	1. Inlet will be capped-off. 2. Level instrumentation may be applied to the seal-pot. 3. Delta P measurement would warn of loss of containment.	3	1. None Identified at this time	2	1

Study Area/Keyword: Loss of Power Hazard

Event Identifier	Initiating Event	Safeguards	Frequency	Hazard Consequence	Worker Consequence	Public Consequence
1614671/345	1. Electric heater stopped.	1. Heater diesel backed. 2. Appropriate instrumentation will be battery backed.	2	1. HEPA filter collapse, due to water ingress (dependant on dew point). Increased discharges to atmosphere; dose uptake to public.	2	2

Fault Schedule: LAW/HLW Secondary Off-Gas Treatment

(Sheet 5)

Study Area/Keyword: Loss of Water Hazard

Event Identifier	Initiating Event	Safeguards	Frequency	Hazard Consequence	Worker Consequence	Public Consequence
1614671/348	1. Loss of chilled or process water to scrubber.	1. Loss of water can be tolerated for short periods. 2. Low level indication in scrubber.	3	1. Increased activity discharge from system. 2. Can't wash HEMEs out - delay in change over. 3. Loss of process water can lead to delay in refilling seal pots.	2	2

Study Area/Keyword: Remote Handling Hazard

Event Identifier	Initiating Event	Safeguards	Frequency	Hazard Consequence	Worker Consequence	Public Consequence
1614671/344	1. Removal of HEME cartridges.	1. HEME cartridge replacement necessary only at infrequent intervals - every couple of years.	4	1. None Identified at this time	1	1

5.2.16 LAW/HLW Container Decontamination System

Vitrified product containers produced at the BNFL waste treatment facility are of two distinctly different specifications. The LAW product containers are rectangular in shape with external dimensions, including all appurtenances, of 1.8 m long by 1.2 m wide by 1.2 m high (5.1 ft long by 3.9 ft wide by 3.9 ft high), ± 0.2 m according to the TWRS-P contract (DOE-RL 1996). The HLW product containers, cylindrical canisters 3.0 m (10 ft) long with a diameter of 0.61 m (2.0 ft) are sized to contract specifications as well. Both the LAW and the HLW containers are constructed from stainless steel. The safe handling and storage of immobilized radioactive waste containers requires that radioactive material is not present as contamination on the outer walls of the containers. It is likely that during the filling of the product containers contamination of the outer walls will occur, therefore a product container decontamination facility will be required. The following system description for the LAW product container decontamination which is similar to that for the new containers.

Before a LAW product container enters the decontamination cell, it will first be charged with the vitrified waste, allowed to cool, and sealed by welding on a stainless steel lid. Once the container has been sealed, it will be posted into the decontamination cell from the cooling cell and lowered into position in the decontamination booth. The crane will then return to the cooling cell and the decontamination cell will be resealed.

Demineralized water will be fed to the demineralized water buffer tank, T9101, which will be located outside the decontamination cell. This tank will store enough demineralized water to decontaminate a LAW product container. The outlet from the buffer tank feeds the reverse osmosis pump, P9101A/B, which pumps the water through the reverse osmosis membrane filter unit, G9101. The reverse osmosis unit removes further impurities from the demineralized water feed, enhancing the life of downstream, incell components. The reject stream from the reverse osmosis unit is fed to a dedicated Treated Effluent Disposal Facility (TEDF) discharge vessel (V9301) for eventual disposal. The purified water, at approximately 2 bar_g is fed to the ultrahigh pressure intensifier pump, P9102A/B, which will produce ultrahigh-pressure water at between 2,500 and 4,000 bar. An intensifier unit acts as an amplifier converting the energy from a relatively low-pressure hydraulic fluid into ultrahigh-pressure water.

The ultrahigh-pressure water exits the intensifier assembly and is passed through an attenuator to smooth the water flow and provide a steady stream of ultrahigh-pressure water from the unit. The ultrahigh-pressure water will then be fed through fixed lines to the decontamination cell. A spray gun arrangement within the cell will receive the ultra high pressure water and direct the spray onto the product container, scouring the surface and removing any contamination. The spray guns produce a jet of ultrahigh-pressure water that transcribes a circle, the movement of the gun in relation to the container (or vice versa) cleans the surface in a band, the width being equal to the diameter of the circle transcribed. A typical bandwidth would be approximately 60 mm (2.4 in.). Surface cleaning will begin at the top of the container, working down the container to end at the base, reducing the likelihood of the contamination being re-deposited on the container surface. It is recommended that multiple spray guns be installed in order to reduce the time required for product container decontamination, and to allow all sides of the rectangular container to be decontaminated without the introduction of complex mechanics. Some degree of mechanical manipulation will be required to allow spray guns to cover the entire container surface. Whether the spray guns or the container itself is manipulated will be determined at a later date.

The washings are contained within the decontamination booth by the removable panel sides and are collected in the base tray, T9102, which drains to a dedicated catch vessel, T9103. The catch vessel will be periodically discharged by the container washings catch tank steam ejector, W9103A/B, to a dedicated ETF discharge vessel for eventual treatment and disposal. Finally the decontaminated container is sent to the adjacent control cell for monitoring and, eventually, transfer to the vitrified product store. If a product container fails to meet the acceptance criteria for the store it may be transported back into the decontamination cell for further treatment. If subsequent decontamination is required, the ultrahigh-pressure jets may be focused upon a specific area, and the operating parameters (pressure, traverse speed, standoff) adjusted to increase the cleaning power.

5.2.16.1 LAW/HLW Container Decontamination System Study Areas and Hazard Evaluation Teams

The hazard evaluation team used PFD 9101 to study the LAW Container Decontamination System. The hazard evaluation team members and respective disciplines are listed as follows:

J. Kisalu – Safety, Team Leader
A. Jenkins – Radiation and Shielding
G. Jones – Safety, Scribe
M. Johnson – Technical Manager
J. Richardson – Mechanical
S. Wright – Control and Instrumentation
M. Page – Process
S. Webb – Process
S. Pickering – Process

The hazard evaluation team used PFD 1614668 to study the HLW Container Decontamination. The hazard evaluation team members and respective disciplines are listed as follows:

J. Kisalu – Safety, Team Leader
G. Need – Process
B. Williams – Mechanical
F. Schoffner – Support Systems

A. Jenkins – Radiation and Shielding
K. Riley – Research and Development
G. Sutherland – Safety, Scribe
S. Webb – Process
S. Amin – Research and Development

Fault Schedule: HLW Container Decontamination

(Sheet 1)

Study Area/Keyword: Corrosion / Erosion Hazard

Event Identifier	Initiating Event	Safeguards	Frequency	Hazard Consequence	Worker Consequence	Public Consequence
9101/23	1. Instrument failure due to corrosion. 2. Excess erosion - due to loss of traverse motion. See 9101/18.	1. Very pure water used - reverse osmosis unit provided.	3	1. Potential escape of glass product due to structural failure of container, following excess erosion of container (see 9101/18).	1	1

Study Area/Keyword: Decontamination Hazard

Event Identifier	Initiating Event	Safeguards	Frequency	Hazard Consequence	Worker Consequence	Public Consequence
1614668/123	1. Glass spillages. 2. Eroded material collection.	1. Clean-up as operations are ongoing. Wash rings in cell. 2. Vacuuming of glass spills as they occur. 3. Good housekeeping.	4	1. Contamination. Glass shards resulting from excess glass / eroded materials resulting from exposure to UHP washing.	1	1

Fault Schedule: HLW Container Decontamination

(Sheet 2)

Study Area/Keyword: Effluent / Washing Hazard

Event Identifier	Initiating Event	Safeguards	Frequency	Hazard Consequence	Worker Consequence	Public Consequence
1614668/126	1. Glass particles in effluent.	1. Strainer in sump to collect glass particles. 2. Micron size particles detected by radiation monitors. 3. Effluent liquor recycled if micron sized particles detected by radiation monitors.	3	1. Potential for the washings to be mis-routed. Potential for increasd dose uptake to workers/public. 2. Potential for shards of contaminated glass to be contained in wash water. Potential for increased dose uptake to workers/public.	1	1

Study Area/Keyword: Explosion / Overpressure Hazard

Event Identifier	Initiating Event	Safeguards	Frequency	Hazard Consequence	Worker Consequence	Public Consequence
1614668/120	1. Pipe whip. 2. High water temperature (70 - 80 degC).	1. Potential for pipe whip is restricted, due to the low water transfer rate, only 2 to 3 litres per minute. 2. Container decontamination system is remotely operated, therefore no contact with high water temperatures.	2	1. Pipe Whip, with potential for injury to nearby personnel.	3	1

Fault Schedule: HLW Container Decontamination

(Sheet 3)

Study Area/Keyword: External Dose Hazard

Event Identifier	Initiating Event	Safeguards	Frequency	Hazard Consequence	Worker Consequence	Public Consequence
1614668/1	1. High surface contamination. 2. Man access required for maintenance.	1. Provision of suitable monitors to detect radiation levels, e.g. from glass spills. 2. Maintenance regime accounts for radiation damage on seals and hoses.	2	1. Dose uptake to Workers / Public.	2	2

Study Area/Keyword: Extreme Weather Hazard

Event Identifier	Initiating Event	Safeguards	Frequency	Hazard Consequence	Worker Consequence	Public Consequence
1614668/129	1. High rainfall, flooding, snow. 2. Low temperature. 3. Temperature fluctuations during spells of extreme weather.	1. Protected by building envelope.	3	1. No hazard consequence identifed - facility assumed to cater for prevalent weather conditions.	1	1

Fault Schedule: HLW Container Decontamination

(Sheet 4)

Study Area/Keyword: HLW Container Decontamination - Dropped Load / Impact Hazard

Event Identifier	Initiating Event	Safeguards	Frequency	Hazard Consequence	Worker Consequence	Public Consequence
1614668/131	1. Container is mis-handled.	1. None Identified at this time	2	1. Limited potential for escape of activity from containers (LAW and HLW) due to its integrity and the likely route of the container during in-cell transfers. 2. Survivability of container under DOE scope. (The containers are expected to maintain integrity).	1	1

Study Area/Keyword: Internal Dose Hazard

Event Identifier	Initiating Event	Safeguards	Frequency	Hazard Consequence	Worker Consequence	Public Consequence
1614668/114	1. Activity migration to inactive areas.	1. Interface with ventilation to ensure depression regime maintained and air velocities. 2. Demister pad ensures that HEPA filters on cell extract do not disintegrate. 3. Area monitoring will detect high activity.	4	1. Potential for activity carry-over in moist air in ventilation system. 2. Increased Internal Dose to Workers / Public.	1	1

Fault Schedule: HLW Container Decontamination

(Sheet 5)

Study Area/Keyword: Loss of All Services Hazard

Event Identifier	Initiating Event	Safeguards	Frequency	Hazard Consequence	Worker Consequence	Public Consequence
1614668/125	1. Loss of Power. 2. Loss of Process Water. 3. Loss of Air.	1. Fail-safe sequencing. Valves closed, shutdown in safe mode.	2	1. Operability Problem - Process will stop.	1	1

Study Area/Keyword: Loss of Containment Hazard

Event Identifier	Initiating Event	Safeguards	Frequency	Hazard Consequence	Worker Consequence	Public Consequence
1614668/117	1. Potential for booth walls not be replaced. 2. Integrity lost in UHP line unions. 3. Heat evolution during operation. (Refer to LAW Decontamination HE Study).	1. Primary containment provided to maintain cell dryness. 2. Unions in UHP lines are protected. 3. Pressure relief provided on UHP lines and protection for operators for heat evolved. 4. Mechanical and / or electrical interlocks to prevent operation if booth walls not in correct position. 4. Visual leak indication provided. 5. Cleaning philosophy is general cleaning followed by detection and clean-up of hot-spots.	3	1. Wash water not contained within booth. Potential for wash water to contaminate cell.	1	1

(Sheet 6)

Fault Schedule: HLW Container Decontamination

Study Area/Keyword: Shielding Hazard

Event Identifier	Initiating Event	Safeguards	Frequency	Hazard Consequence	Worker Consequence	Public Consequence
1614668/115	None Identified	1. All equipment is in within cell.	1	1. Potential for external dose to workers / public.	1	2

Study Area/Keyword: Ventilation - Saturated Vapour Challenge, Activity Carry-Over Hazard

Event Identifier	Initiating Event	Safeguards	Frequency	Hazard Consequence	Worker Consequence	Public Consequence
1614668/118	1. Poor visibility in cell during decontamination requiring adequate ventilation. 2. Activity carry-over. 3. Disintegration of filters. (Refer to entry 9101/10).	1. None Identified at this time	3	1. Challenge to ventilation system.	2	2

Fault Schedule: LAW Container Decontamination

(Sheet 1)

Study Area/Keyword: Corrosion / Erosion Hazard

Event Identifier	Initiating Event	Safeguards	Frequency	Hazard Consequence	Worker Consequence	Public Consequence
9101/23	1. Instrument failure due to corrosion. 2. Excess erosion - due to loss of traverse motion. See 9101/18.	1. Very pure water used - reverse osmosis unit provided.	3	1. Potential escape of glass product due to structural failure of container, following excess erosion of container (see 9101/18).	1	1

Study Area/Keyword: Decontamination Hazard

Event Identifier	Initiating Event	Safeguards	Frequency	Hazard Consequence	Worker Consequence	Public Consequence
1614668/123	1. Glass spillages. 2. Eroded material collection.	1. Clean-up as operations are ongoing. Wash rings in cell. 2. Vacuuming of glass spills as they occur. 3. Good housekeeping.	4	1. Contamination. Glass shards resulting from excess glass / eroded materials resulting from exposure to UHP washing.	1	1

Fault Schedule: LAW Container Decontamination

(Sheet 2)

Study Area/Keyword: Domino (Other Effects) Hazard

Event Identifier	Initiating Event	Safeguards	Frequency	Hazard Consequence	Worker Consequence	Public Consequence
9101/24	1. Wastes mis-routed - see entry Operability - 9101/14.	1. Design allows for normal throughput as well as containers returned for re-work. 2. Buffer storage in decontamination cell (LAW Container Decontamination). 3. Swabbing detects hot-spots on container.	4	1. Hot spots on container due to presence of splashing of glass or deposition of volatiles - no special treatment : container to be put through normal re-work.	1	1

Study Area/Keyword: Effluent / Washing Hazard

Event Identifier	Initiating Event	Safeguards	Frequency	Hazard Consequence	Worker Consequence	Public Consequence
9101/22	1. High pressure wash water used for decontamination of cannisters. 2. Washings contain shards of contaminated glass.	1. Washings are contained within the decontamination booth by removable panel sides, and are collected in the base tray T9102, with drain to a dedicated catch vessel, T9103. 2. Ultimate discharge route is to ETF, and is monitored before discharge. 2. Catch vessel is periodically discharged by the container washings catch tank steam ejector.	3	1. Potential for the washings to be mis-routed. Potential for increasd dose uptake to workers / public. 2. Potential for shards of contaminated glass to be contained in wash water. Potential for increased dose uptake to workers/public.	2	1

Fault Schedule: LAW Container Decontamination

(Sheet 3)

Study Area/Keyword: Explosion / Overpressure Hazard

Event Identifier	Initiating Event	Safeguards	Frequency	Hazard Consequence	Worker Consequence	Public Consequence
9101/13	1. Fracture of discharge line from intensifier unit to decontamination nozzels. 2. Possible overpressurisation caused by blockage of line to discharge unit.	1. Intensifier is in a sealed unit, and would contain the burst of high pressure water.	2	1. Water released at injurous pressure - pipe whip etc.	3	1

Study Area/Keyword: External Dose Hazard

Event Identifier	Initiating Event	Safeguards	Frequency	Hazard Consequence	Worker Consequence	Public Consequence
9101/0	None Identified	1. All equipment in-cell.	4	1. Dose uptake to Workers / Public.	1	1

Study Area/Keyword: Loss of Air Hazard

Event Identifier	Initiating Event	Safeguards	Frequency	Hazard Consequence	Worker Consequence	Public Consequence
9101/21	1. Loss of air supplies.	1. System fails-safe upon loss of instruments.	2	1. Loss of instruments - process stops.	1	1

Fault Schedule: LAW Container Decontamination

(Sheet 4)

Study Area/Keyword: Loss of Containment Hazard

Event Identifier	Initiating Event	Safeguards	Frequency	Hazard Consequence	Worker Consequence	Public Consequence
9101/7	1. Water leaks from in-active parts. 2. Overflow or failure of collection vessel T9103. 3. No relative movement of container and nozzles causing excess surface erosion 4. Instrument failure.	1. Level measurement and alarm. 2. Base of walls within booth tray. 3. Overflow of booth tray will cause water to spill into lined cell. 4. Tank sized to take batch operation. 5. Drip trays to collect spillages. 6. Water jets only have cutting power for 6 inches distance from nozzle.	3	1. Container leakage. 2. Vessel leakage to cell. 2. Potential for increased dose uptake to operators / public.	1	1

Study Area/Keyword: Loss of Power Hazard

Event Identifier	Initiating Event	Safeguards	Frequency	Hazard Consequence	Worker Consequence	Public Consequence
9101/18	1. Loss of power to any units, during cycle. 2. Loss of power to one nozzle traversemotor only.	1. Process has to stop (interlock?) if no relative movement of nozzle/container. 2. Loss of power renders system fail-safe (intensifier also stops).. 3. Restart sequence following loss of power to ensure that the nozzle moves before intensifier starts. 4. Decontamination cycle restarts from the last known position before continuing, avoiding the development of hotspots.	3	1. Potential for loss of containment due to excess erosion due to lack of relative movement of nozzle/container.	1	1

Fault Schedule: LAW Container Decontamination

(Sheet 5)

Study Area/Keyword: Loss of Steam Hazard

Event Identifier	Initiating Event	Safeguards	Frequency	Hazard Consequence	Worker Consequence	Public Consequence
9101/19	1. Cannot eject from LA effluent vessel T9103 or from active sump discharge T9110.	1. None Identified at this time	2	1. Plant operation halted.	1	1

Study Area/Keyword: Loss of Water Hazard

Event Identifier	Initiating Event	Safeguards	Frequency	Hazard Consequence	Worker Consequence	Public Consequence
9101/20	1. Loss of water.	1. Loss of water fails process to a safe state.	2	1. Process stops.	1	1

Study Area/Keyword: Occupational Safety Hazard

Event Identifier	Initiating Event	Safeguards	Frequency	Hazard Consequence	Worker Consequence	Public Consequence
9101/28	1. High pressure burst (see 9101/13). 2. Overflow from T9101. 3. Electrical hazard and spill/slip hazard from water leakage (see also loss of containment). 4. Noise from Intensifier.	1. Apporpriate safeguards against collection of water, sufficient draining. 2. Appropriate protection afforded to electrical equipment against ingress of water droplets - thereby reducing need for maintenance and reducing electric shock risk to operators, etc,.	4	1. Occupational safety risks to workers only.	2	1

Fault Schedule: LAW Container Decontamination

(Sheet 6)

Study Area/Keyword: Ventilation - Saturated Vapour Challenge Hazard

Event Identifier	Initiating Event	Safeguards	Frequency	Hazard Consequence	Worker Consequence	Public Consequence
9101/10	1. Spray from nozzles results in very high humidity in cell. 2. Rapid cooling of glass through water spray, adverse heat loads on ventilation system. 3. Saturated water atmosphere from nozzle spray. 4. Steam generation from hot container. 5. Potential disintegration of filters.	1. Decontamination vapour removal (e.g. knitmesh) will be provided in the air exit stream from the booth minimising carry-over of water droplets into the cell. 2. LAW Product containers will be below 100degC when posted into the cell. Massive steam generation is not therefore envisaged. 3. There is a check on LAW Product Container temperature, prior to posting into the cell.	3	1. Potential for challenge to ventilation system. 2. Vapour impairs HVAC filters. 3. Fracturing of glass increases surface area and decreases quality.	2	2

5.2.17 Plant Waste Management System

Active effluent is sent to the ETF, and nonactive effluent will be sent to the TEDF. Wherever possible, liquid effluents are recycled within the process to minimize the quantities of effluent discharged from the TWRS-P Facility. Included in these liquid effluents are the condensates, plant drains, and effluent from waste storage operations and solid waste handling.

Condensates

Condensates have been classified as process condensate or steam condensate. Process condensate is defined as the liquor generated by condensing a vapor stream which has been in contact with any process fluid. Steam condensate is defined as the liquor generated when steam is used as a heating medium in a vessel jacket or heat exchanger in which the process and heating sides are kept segregated.

Process condensates are routed to the process condensate vessels V9306A/B. One vessel will be filled while the other is being sampled and discharged. Some of the condensate is sent to the ultrafiltration feed vessels, V1102A/B, where it is used for washing solids. The remainder of the condensate will be transferred to ETF. If the activity is outside the ETF acceptance limits, it is transferred to the Contaminated Condensate Vessel, V9308. The contaminated condensate is recycled to the LAW evaporator feed tanks, V2101/2.

Steam condensates is routed to the non-active condensate vessel, V9305. The condensate is monitored inline before the vessel. If radioactivity is detected, the condensate is sent to the process condensate vessels, V9306A/B. If no activity is detected, then the condensate is cooled and recycled.

Cesium and Technetium Ion Exchange Waste Streams

Dilute cesium caustic waste streams used in regenerating the cesium ion exchange columns are recycled from caustic rinse collection tank, V2203, by caustic recycle RFD, P2203, to the contaminated condensate tank, V9308. Technetium ion exchange caustic wastes are recycled from the caustic rinse collection Tank, V2602, to the contaminated condensate tank, V9308.

Dilute waste acid streams used in regenerating ion exchange columns are sent to acid recovery by evaporation systems. The condensates are recycled by ejector, W2306, to the acidic effluent vessel, V9302. The acidic effluent is neutralized with caustic and sent by RFD, P9302A/B, to the contaminated condensate tank, V9308.

Effluent from the cesium recovery system is pumped by Canister Feed RFD, P2401A/B, via the canisters to the contaminated condensate tank, P9308, and excess water used for resin flushing is sent to V9308. Contaminated condensate RFD, P9308A/B, transfers the contents of V9308 to the LAW evaporator feed tanks, V2101/2.

LAW Vitrification Offgas Waste Streams

The quench water return from the LAW offgas treatment is recycled to the treated LAW collection vessels, V2603A/B/C. Backwashes from the LAW melter quench offgas filters are collected in vessel, V3321 and then transferred to V2603A/B/C. Offgas condensate from C3302 are collected in the LAW offgas condensate collection vessel, V3320. Purge from the offgas scrubber, C3601, goes to V3320.

The contents of LAW offgas condensate collection vessel, V3320, is pumped by P3301A/B to process condensate vessels, V9306A/B. Water from hydraulic seal pots, V3301A/B, V3302A/B, V3303A/B and V3311/A/B, V3312A/B, and V3313A/B, are ejected to breakpot, V3322, which drains to the contaminated condensate tank, V9308.

LAW Container Decontamination

Reject water from the RO Filter Unit, G9101, go to the nonactive effluent tank, V9301A/B. Container washes are collected in the container washings catch vessel, T9103, and then transferred to the LAW container wash vessel, V9309. The washings are monitored for activity and if they meet the ETF requirements they are routed to ETF, via the plant wash vessel, V9303, otherwise they are sent to the contaminated condensate vessel, V9308.

HLW Pretreatment

Permeate from the HLW Ultrafilters, G4101A/B, are routed directly to the LAW evaporator feed tanks, V2101/2.

HLW Vitrification Offgas Waste Streams

The quench water return from the HLW offgas treatment are recycled to the HLW ultrafiltration feed vessels, V4101/2. Backwashes from the HLW melter quench offgas filters are collected in vessel, V4304 and then transferred to V4101C. Offgas condensate from E4303 is collected in vessel V4305. Purge from offgas scrubber, C4302, go to the offgas condensate collection vessel V4305. The contents of offgas condensate collection vessel, V4305, are pumped by P4303 to process condensate vessels, V9306A/B. Water from hydraulic sealpots, V4301A/B and V4302A/B, is ejected to breakpot, V4303, which drains to the contaminated condensate tank V9308.

HLW Container Decontamination

Reject water from the RO Filter Unit, G9201, go to the nonactive effluent tank, V9301A/B container washes are collected in the container washings catch vessel, T9203, and then transferred to the HLW container wash vessel, V9310. The washings are monitored for activity and if they meet ETF requirements, they are routed to ETF via plant wash vessel, V9303, otherwise they are recycled back to Envelope D receipt vessel, V4101C.

Drains from Active Areas

Miscellaneous effluents arising from equipment drains and sumps are sent to the process condensate vessels, V9306A/B, for sampling and sample analysis. If the radioactivity is within the ETF limits, the effluent is transferred by RFD to the plant wash vessel, V9303. If the effluent is outside the ETF limits, it is routed by RFD to the contaminated condensate vessel, V9308. The effluents in V9303 are also monitored for activity. If they meet the requirements they are pumped to ETF by plant decontamination pump, P9303A/B; otherwise, they are sent to the LAW feed evaporator tanks, V2101/2.

Drains from Nonactive Areas

Miscellaneous effluents arising from equipment drains and sumps are sent to the nonactive effluent tank, V9301. Major sources of effluent are likely to be cooling tower blowdown, sand filter and demineralized water unit backwashes.

Steam Condensate

Condensate collected in the nonactive condensate vessel, V9305, are flashed down to 0.7 bar_g and the flash steam reused in heating, ventilation, and air-conditioning (HVAC) heat exchangers. The remaining condensate are cooled and recycled to the steam boilers. Condensates that arise from steam traps at low pressure or are remote from condensate return lines are routed to V9301A/B.

Effluent Disposal

The contents of the nonactive effluent tank, V9301A/B, are monitored for radioactivity in the pump discharge line. The contents are pumped to TEDF by nonactive effluent pump, P9301A/B, if no radioactivity is detected. If radioactivity is detected, the contents are sent to the plant wash vessel, V9303.

5.2.17.1 Plant Waste Management System Study Areas and Hazard Evaluation Teams

The PFDs covering different aspects of Plant Waste Management System were reviewed by a hazard evaluation team. In the Process and Safety pre-meeting, the Condensate/Plant Wash and Drain Systems PFD 1614665 was determined to have the following three different modes that were assigned to the hazard evaluation team as study areas:

1) Receipt, sampling, and analysis of condensates
2) Receipt, sampling, and analysis of washes
3) Rework process

The hazard evaluation team members and respective disciplines are listed as follows:

G. Sutherland – Safety, Team leader
I. Roberts – Systems
M. Johnson – Technical Manager
G. Need – Process
F. Shoffner – Project Management
M. Page – Process
J. Kisalu – Safety
B. Williams – Mechanical

Waste Storage Operations were also reviewed as single study area using PFD 1614776. The hazard evaluation team members and respective disciplines are listed as follows:

J. Kisalu – Safety, Team Leader
B. Wallace – Scribe
J. Haworth – NRS
A. Tighe – Systems
N. Baily – Mechanical
D. Hughes – Process
M O'Brien – Mechanical
P. Knight – Mechanical
D. Caunce – Mechanical

Fault Schedule: Condensate/Plant Wash And Drain Systems

(Sheet 1)

Study Area/Keyword: Corrosion / Erosion Hazard

Event Identifier	Initiating Event	Safeguards	Frequency	Hazard Consequence	Worker Consequence	Public Consequence
1614665/144	1. Acid, caustic and steam present in system corrosive.	1. Appropriate materials will be selected. 1. Steam and water will be suitably conditioned. 1. Stack drains will be routed into the Condensates, Washes and Drain Systems.	3	1. Potential for leakage.	2	1

Study Area/Keyword: Decontamination Hazard

Event Identifier	Initiating Event	Safeguards	Frequency	Hazard Consequence	Worker Consequence	Public Consequence
1614665/136	1. Activity build-up or plate out of active washings sent to Plant Condensates and Drain System.	1. Wash rings provide in vessels. 2. Plant washings are routed through, and so no additional wash provisions required for this system.	4	1. None Identified at this time	1	1

Fault Schedule: Condensate/Plant Wash And Drain Systems

(Sheet 2)

Study Area/Keyword: Domino (Other Effects) Hazard

Event Identifier	Initiating Event	Safeguards	Frequency	Hazard Consequence	Worker Consequence	Public Consequence
1614665/145	1. Iodine into secondary off-gas system. 2. Issue to be raised in HE of secondary off-gas system. 3. ETF and TEDF lines do not have sufficient capacity to accept discharges from all 3 plants (BNFL TWRS, Lockheed TWRS, Hanford evaporator) atthe same time - TEDF line has users from all Hanfofd site.	1. Isolation provision may be required to prevent problems at TWRS with backed up lines. 2. Interfaces with other users will also be required.1. Iodine may be scrubbed out of the off-gas in the secondary system.	3	1. Back-up of ETF and TEDF line from other users.	2	2

Fault Schedule: Condensate/Plant Wash And Drain Systems

(Sheet 3)

Study Area/Keyword: Dropped Load / Impact Hazard

Event Identifier	Initiating Event	Safeguards	Frequency	Hazard Consequence	Worker Consequence	Public Consequence
1614665/148	1. Crane, grab, mini-manipulator, cable or block failure. 2. Two blocking - load reaches end of travel (load hits pulley block). 3. Movement over disallowed areas. 4. Interlock / control failure. 5. Lifting device overloaded / snagged.	1. Lifting beam will be provided to assist any heavy lifting in gloveboxes etc.	2	1. None Identified at this time	1	1

Study Area/Keyword: Explosion / Overpressure Hazard

Event Identifier	Initiating Event	Safeguards	Frequency	Hazard Consequence	Worker Consequence	Public Consequence
1614665/133	1. Failure of valves causing increase in pressure in V9305. 2. Condensate from recovery system pressurises vessel.	1. V9305 will be designed against worst case conditions approx 3 bar. 2. V9305 normally pressurised to 1 bar g.	2	1. Vessel V9305 explodes, due to overpressurisation. 2. Cotamination spread through the cell.	2	2

Fault Schedule: Condensate/Plant Wash And Drain Systems

(Sheet 4)

Study Area/Keyword: External Dose Hazard

Event Identifier	Initiating Event	Safeguards	Frequency	Hazard Consequence	Worker Consequence	Public Consequence
1614665/125	1. Washings will created from washing out tanks. They may also arise in the event of any leaks from drip trays etc. 2. Emptying ejector from cell sump routed to V9306 and V9307. 3. Strainers to be provided to trap any solids that may arise. 4. Contamination of steam or washings. 5. Failed activity monitors so that condensate is not diverted to vessel V9308.	1. Tanks located inside process cells and connected to the vessel vent system. 2. Other activity monitors upstream of process provide additional detection. 3. Monitors would be configured to initiate fail safe actions on failure. 4. Necessity for diverse activity monitors (or power supplies to monitors) to be established at detailled design stage.	3	1. Dose uptake to Workers / Public. 2. Activity in flash vessel which is located outside process cells. 3. Dose consequences are likely to bew low.	2	1

Study Area/Keyword: Extreme Weather Hazard

Event Identifier	Initiating Event	Safeguards	Frequency	Hazard Consequence	Worker Consequence	Public Consequence
1614665/146	1. High rainfall, flooding, snow. 2. Low temperature. 3. Temperature fluctuations during spells of extreme weather.	1. Process generally protected by the facility building from extreme weather conditions	3	1. TEDF line may be unavailable from loading presented by extreme events. 2. Line freezes under low temperature	1	1

Fault Schedule: Condensate/Plant Wash And Drain Systems

(Sheet 5)

Study Area/Keyword: Fire Hazard

Event Identifier	Initiating Event	Safeguards	Frequency	Hazard Consequence	Worker Consequence	Public Consequence
1614665/132	1. Ammonia may be present in the process condensate. 2. Maintenance operations may be the only source of ignition in this area.	1. Fire protection measures in this area.	4	1. Fire.	1	1

Study Area/Keyword: Internal Dose Hazard

Event Identifier	Initiating Event	Safeguards	Frequency	Hazard Consequence	Worker Consequence	Public Consequence
1614665/126	1. Sampling off presurised flows (eg V9303).	1. Samples taken via RFDs. 2. Ventilated sample cabinet system in shielded bulge. Operator contact is not possible. Bottle posted in from outside. 3. Liquor cannot be ejected from needle in absence of sample bottle. 2. Samples are taken remotely.	3	1. Activity in the sampler needle. 2. Increased Internal Dose to Workers.	1	1

Fault Schedule: Condensate/Plant Wash And Drain Systems

(Sheet 6)

Study Area/Keyword: Loss of Air Hazard

Event Identifier	Initiating Event	Safeguards	Frequency	Hazard Consequence	Worker Consequence	Public Consequence
1614665/141	Loss of instrument air.	Essential instrumentation will be secured against loss of air (Diversity of measurement and/or back-up of supply).	2	1. Plant stops. 2. Loss of air results in loss of RFDs. - no liquor transfers possible. 3. Instrumentation lost (those that depend on instrument air, eg pneumercators). 4. Loss of sampling ability (if RFDs sample systems used).	1	1

Study Area/Keyword: Loss of Containment Hazard

Event Identifier	Initiating Event	Safeguards	Frequency	Hazard Consequence	Worker Consequence	Public Consequence
1614665/130	1. Corrosive agents present (Acids present (but are highly dilute), steam). 2. Back up of TEDF ETF lines.	1. Suitable secondary confinement will be provided (eg cells or drip trays for outcell vessels and pumps). 2. Vessels and pipework materials will be selected for suitability. 3. Availability of ETF and TEDF will be continuous (DOE will pay penalties if these facilities are unavailable).	2	1. Vessels located out-cell will have atmospheric vent which gives a route for liquor release into the room. 2. Such vessels will require suitable collection. 3. Backup of discharge lines could cause overfilling of V9301 (which is at the low point of the building) and flooding of the room.	1	1

Fault Schedule: Condensate/Plant Wash And Drain Systems

(Sheet 7)

Study Area/Keyword: Loss of Power Hazard

Event Identifier	Initiating Event	Safeguards	Frequency	Hazard Consequence	Worker Consequence	Public Consequence
1614665/138	1. Loss of power leading to potential for uncontrolled flows into vessels and adverse interactions. 2. Loss of power to indication and control equipment.	1. Valves will fail to safe mode upon loss of power.	2	1. Transfers will stop on loss of power. 2. Plant may have to shut down.	1	1

Study Area/Keyword: Loss of Process Chemicals Hazard

Event Identifier	Initiating Event	Safeguards	Frequency	Hazard Consequence	Worker Consequence	Public Consequence
1614665/142	1. Loss of caustic	1. None Identified at this time	2	1. Radioactive iodine release to secondary off-gas system if acid not neutralised. 2. Too much alkali leads to increased volume of glass (sodium).	1	1

Fault Schedule: Condensate/Plant Wash And Drain Systems

(Sheet 8)

Study Area/Keyword: Loss of Steam Hazard

Event Identifier	Initiating Event	Safeguards	Frequency	Hazard Consequence	Worker Consequence	Public Consequence
1614665/139	1. Loss of steam.	None.None.	2	1. Failure to transfer to ETF and TEDF. 2. Loss of steam will stop process, flash-off vessel will not be then required.	1	1

Study Area/Keyword: Occupational Safety Hazard

Event Identifier	Initiating Event	Safeguards	Frequency	Hazard Consequence	Worker Consequence	Public Consequence
1614665/149	1. High surface temperatiures on the vessels (e.g. V9305 has a psurface tempaerature of 130 deg C).	1. Vessel will be insulated. 2. Appropriate warning signs will be posted.	4	1. Potential for maintainers to touch vessel V9305 ?	2	1

Study Area/Keyword: Remote Handling Hazard

Event Identifier	Initiating Event	Safeguards	Frequency	Hazard Consequence	Worker Consequence	Public Consequence
1614665/137	1. Entire system (including sampling) is undertaken remotely.	1. Sampling undertaken remotely. 2. System will be operated remotely.	4	1. No hazard identified.	1	1

Fault Schedule: Condensate/Plant Wash And Drain Systems

(Sheet 9)

Study Area/Keyword: Shielding Hazard

Event Identifier	Initiating Event	Safeguards	Frequency	Hazard Consequence	Worker Consequence	Public Consequence
1614665/128	1. Compromise to shielding.	1. Potentially active vessels will be located in-cell. 2. Pumps are maintainable items located in bulges. 3. Liquors are low active so any shielding requirements will be low. 4. Other vessels (eg V9305) will be located in rooms with likely restricted access. 5. Shielding assessment completed for the off-gas which has higher activity levels - no shielding required.	3	1. Potential for external dose to workers / public.	1	1

Study Area/Keyword: Ventilation - Elimination of Gasses Hazard

Event Identifier	Initiating Event	Safeguards	Frequency	Hazard Consequence	Worker Consequence	Public Consequence
1614665/131	1. Generation of gasses in active tanks.	1. Active tanks in process cells are vented to vessel vent system. Vessel vent system should be handling the steam flashed off.	3	1. Contaminated process condensate giving elevated acid concentrations (0.5M) in neutralisation tank V9302, yielding increased radioactive iodine concentration. Potential for increased discharges via stack and dose potential for uptake to Workers and Public.	2	2

(Sheet 1)

Fault Schedule: Waste Storage Operations

Study Area/Keyword: Corrosion / Erosion Hazard

Event Identifier	Initiating Event	Safeguards	Frequency	Hazard Consequence	Worker Consequence	Public Consequence
1614776/283	1. Corrosion of crane structure. 2. Erosion of flask bolts.	1. Crane is tested periodically to show that fatigue is not a problem. 2. Loading bay floor designed for flask bolts.	2	1. Reduction in crane structural integrity - potential for collapse. 2. Wear on flask bolts.	4	1

Study Area/Keyword: Decontamination Hazard

Event Identifier	Initiating Event	Safeguards	Frequency	Hazard Consequence	Worker Consequence	Public Consequence
1614776/279	1. Decontamination operations.	1. Lid remains suspended within containment, hence decontamination not required on underside of lid. 2. Good housekeeping.	3	1. None identified at this time.	1	1

Study Area/Keyword: Domino (Other Effects) Hazard

Event Identifier	Initiating Event	Safeguards	Frequency	Hazard Consequence	Worker Consequence	Public Consequence
1614776/284	1. Store full and flask handling ability lost.	1. Containers held within lattice framework, preventing toppling a stack of containers. 2. Impact on crane availability may mean a dedicated hoist for removing container is required.	3	1. Loss of through-put as store has maximum 60 day storage. 2. Mal-practice could damage trailer (operability issue).	1	1

Fault Schedule: Waste Storage Operations

(Sheet 2)

Study Area/Keyword: Dropped Load / Impact Hazard

Event Identifier	Initiating Event	Safeguards	Frequency	Hazard Consequence	Worker Consequence	Public Consequence
1614776/287	1. Road trailer collisions. 2. Failure to unbolt load from trailer. 3. Dropped flask. 4. Crane or operator failure. 5. Handling accident.	1. Provision of barriers. 2. Trailer positioned correctly and load stablised. 3. Suitable operating procedures. 4. Suitable crane integrity. 5. Lift heights minimised. 6. Recovery route available from dropped load event. 7. Bogie holds solid waste container in frame, preventing topple. 8. Flask and lid may survive impact. Further work required to determine that this is the case. 9. Low activity present in containers. 10. Swinging loads must be prevented. Further work required to determine how this will be achieved.	2	1. Crane will attempt pick up flask and trailer. 2. Flask dropped onto bogie. 3. Lid dropped into flask.	4	1

Study Area/Keyword: Extreme Weather Hazard

Event Identifier	Initiating Event	Safeguards	Frequency	Hazard Consequence	Worker Consequence	Public Consequence
1614776/285	1. Snow, Flooding, etc,.	1. Structural integrity.	4	1. Breach of building integrity.	1	1
1614776/411	1. Flooding, etc,. 2. Breech of water main.	1. All penetrations into floor on an upstand to prevent flood water entering transit tunnel.	2	1. Flooding.	1	1

(Sheet 3)

Fault Schedule: Waste Storage Operations

Study Area/Keyword: Fire Hazard

Event Identifier	Initiating Event	Safeguards	Frequency	Hazard Consequence	Worker Consequence	Public Consequence
1614776/275	1. Diesel fuel fire.	1. Building fire protection system (e.g. sprinklers). 2. Quantity of fuel stored is restricted, and will be controlled.	3	1. Fuel fire in area.	3	1

Study Area/Keyword: Flask Export. External Dose Hazard

Event Identifier	Initiating Event	Safeguards	Frequency	Hazard Consequence	Worker Consequence	Public Consequence
1614776/344	1. Lid not on cannister and gamma gate open. 2. Lid knocked off container before sealing after removal.	1. Gamma gate will not open if lid not on cannister. 2. Visual confirmation via CCTV that lid is properly seated and lowering mechanism is down. 3. Lid cannot be knocked off once container is seated. 4. Controls in place to ensure the lid is bolted before the flask is removed.	2	1. Shinepath to operators. Potential for increased dose uptake to operators.	3	1

Fault Schedule: Waste Storage Operations

(Sheet 4)

Study Area/Keyword: Human Error Hazard

Event Identifier	Initiating Event	Safeguards	Frequency	Hazard Consequence	Worker Consequence	Public Consequence
1614776/294	1. Human intervention - operation.	1. Lifiting beams will only fit on correct way round etc,. 2. Physical interlocks- operator cannot release mis-identified container for export. 3. Precise procedures and training.	3	Significant potential for human error : 1. Dropped cannister. 2. Mis-identified container exported.	2	1

Study Area/Keyword: Internal Dose Hazard

Event Identifier	Initiating Event	Safeguards	Frequency	Hazard Consequence	Worker Consequence	Public Consequence
1614776/345	1. Contamination on flask exterior.	1. Flasks swabbed and confirmed before removal.	3	1. Contamination piled up in store during checks.	2	1

Fault Schedule: Waste Storage Operations

(Sheet 5)

Study Area/Keyword: Loss of Containment Hazard

Event Identifier	Initiating Event	Safeguards	Frequency	Hazard Consequence	Worker Consequence	Public Consequence
1614776/299	1. Lid removed. 2. Dropped flask. 3. Dropped container.	1. The crane does not have handing features to lift the lid. 2. The lid is bolted on. 3. Tamper proof sealing mechanism incorporated.Low level container door interlocked with bogie to ensure sources can't be introduced underneath with gate open. 4. Lift heights minimised.	3	1. Lid removal in flask introduction area. 2. Loss of flask containment. 3. Container failure.	4	1

Study Area/Keyword: Loss of Services Hazard

Event Identifier	Initiating Event	Safeguards	Frequency	Hazard Consequence	Worker Consequence	Public Consequence
1614772/133	1. Compressed Air.	1. Compressed air may be on bottle backed supplies. 2. Pneumatic seals used in mechanical handling.	3	1. Process stops.	1	1
1614776/281	1. Electrical power.	1. Crane designed to sustain load in the event of a loss of power.	3	1. Operations stopped. 2. No safety implications.	1	1

Fault Schedule: Waste Storage Operations

(Sheet 6)

Study Area/Keyword: Prepare Flask for Loading. Remove Container from Storage Channel and Load into Flask. External Dose Hazard

Event Identifier	Initiating Event	Safeguards	Frequency	Hazard Consequence	Worker Consequence	Public Consequence
1614776/295	1. Maloperation of gamma gate. 2. Failure of interlock. 3. Failure of detector.	1. Key operation prevents operator to become locked in the flask intorduction area. 2. Gamma gate controls located outside introduction area preventing operator opening gamma gate. 3. Gamma gates are closed during operations. 4. Radiation monitoring.	2	1. Gamma gate open when operator is in the flask introduction area.	3	1

Study Area/Keyword: Receive Empty Transport Flask and Load into Loading Bay - External Dose Hazard

Event Identifier	Initiating Event	Safeguards	Frequency	Hazard Consequence	Worker Consequence	Public Consequence
1614776/269	1. Flask not empty. 2. Contamination on outside of flask.	1. Flask monitored on receipt confirming acceptable activity levels. 2. Flask rejected if contamination limits exceeded. 3. Flask weighed to detect a full full flask. 4. Flask examined for damage and assessed to determine if it can be handled by the facility.	3	1. Potential for increased dose uptake to workers.	2	1

(Sheet 7)

Fault Schedule: Waste Storage Operations

Study Area/Keyword: Remote Handling Hazard

Event Identifier	Initiating Event	Safeguards	Frequency	Hazard Consequence	Worker Consequence	Public Consequence
1614776/306	1. Bolt removal and installation of the cowl are not remote handling operations.	1. None identified at this time	4	1. Potential for increased dose uptake to Workers.	1	1

Study Area/Keyword: Remove Transport Flask from Loading Bay. Load Transport Flask and Trailer Ready for Dispatch. Direct export of solid waste containers. External Dose Hazard

Event Identifier	Initiating Event	Safeguards	Frequency	Hazard Consequence	Worker Consequence	Public Consequence
1614776/369	1. Contamination on transport flask. 2. Unauthorized entry into transit tunnel.	1. HP checks before export. 2. Gamma gate and monitoring up-stream of process. 3. Low level export waste gamma gate is fenced off. 4. Controlled / restricted access to transit tunnel area.	3	1. High dose rate container set for direct export. 2. Operator is exposed to radiation sources and contamination.	2	1

Study Area/Keyword: Shielding Hazard

Event Identifier	Initiating Event	Safeguards	Frequency	Hazard Consequence	Worker Consequence	Public Consequence
1614776/271	1. Mitigation of direct shine from source.	1. Flask provides shielding. 2. Health physics checks on receipt.	3	1. Debris left in flask. Potential for increased dose uptake to Workers.	3	1

Fault Schedule: Waste Storage Operations

(Sheet 8)

Study Area/Keyword: Ventilation Hazard

Event Identifier	Initiating Event	Safeguards	Frequency	Hazard Consequence	Worker Consequence	Public Consequence
1614776/300	1. Vehicle fumes (high toxicity) in this area.	1. When gamma gate is open air is drawn into the transit tunnel. 2. Doors and ventilation extract system interlocked preventing C2 area atmosphere entering loading bay.	3	1. Potential for health detriment to Workers.	2	1

5.2.18 Outcell Process Reagents

Outcell process reagents are required within the TWRS-P Facility in a range of concentrations for a variety of duties. This process description details these duties, the reagents required, and the required reagent concentrations. These reagents are further diluted, if necessary, depending on their usage destination.

Plant Description

Reagents at the specified concentrations are required for the duties outlined in the following lists. (Local dilution means the required concentration is achieved by dilution in the process cell.)

12.1M Nitric Acid

Makeup for cesium and technetium ion exchange eluant, and for charging the nitric acid recovery evaporators (diluted locally)

2M Nitric Acid

Washing HLW melter offgas treatment HEMF
Backflushing LAW ultrafilter units
Backflushing HLW ultrafilter units

19M Sodium Hydroxide

Initial neutralization of technetium intermediate product (LAW-only option)
Initial neutralization of cesium intermediate product (LAW-only option)
Strontium/TRU precipitation reagent

5M Sodium Hydroxide

Cesium ion exchange column regeneration (diluted locally)
Cesium ion exchange column flushing and rinsing (diluted locally)
Technetium ion exchange column regeneration and flushing and rinsing (diluted locally)
Offgas treatment condensate pH adjustment
Conditioning of cesium ion exchange resin
Conditioning of technetium ion exchange resin
Backflush of ultrafilter units (if required)

0.5M Sodium Hydroxide

HLW melter offgas treatment wet scrubber feed
Fine adjustment of technetium intermediate product to return pipeline conditions (LAW-only option).
Fine adjustment of pH of cesium intermediate product (LAW-only option)
Adjustment of entrained solids product (and strontium/TRU for LAW-only treatment option) conditions required for return to DOE
Neutralization of process condensate (if required)

1M Strontium Nitrate

Strontium/TRU precipitation reagent

3.5M Ferric Nitrate

Strontium/TRU precipitation reagent

0.5M Sodium Nitrite

Adjustment of entrained solids (and strontium/TRU for LAW-only treatment option) product to return pipeline conditions
Fine adjustment of technetium intermediate product to return pipeline conditions (LAW-only option)

Ammonia

NO_x reducing agent added to the SCR.

Reagents will be supplied to the plant in the following form:

- Nitric Acid – 12.2M solution (60 wt%) – specific gravity 1.38
- Sodium Hydroxide – 19M solution (57 wt%) – specific gravity 1.59
- Sodium Nitrite – solid crystalline form – specific gravity 2.168
- Ammonia – vendor-supplied
- Ferric Nitrate – solid crystalline form ($Fe(NO_3)_3 \cdot 6H_2O$) specific gravity 1.684 (This form is deliquescent and therefore needs to be kept dry)
- Strontium Nitrate – supplied in solid crystalline form ($Sr(NO_3)_2$) – specific gravity 2.986

Each reagent has a bulk storage tank/storage area (dependent on the form in which it is to be delivered to the plant). The liquid bulk storage tanks are external to the process building. The reagents have makeup/dilution tanks to generate the required reagent solution concentrations, and day tanks as required.

Nitric acid tanks will have fume vents that vent into a wet scrubber. The makeup/dilution tanks have internal cooling coils, if required, for removing heat generated by the dissolving or dilution of the reagents. Sodium nitrite solutions are stable for relatively short periods and hence, are prepared as required. The precipitation reagents supplied to the plant as solids are prepared at 1-week intervals to ensure that the solutions remain fresh.

Process Operation and Control

The dilution and makeup of reagents to the required concentrations is achieved by metering both the flow of demineralized water and the flow of reagents into the tank. Where process reagents are required on a noncontinuous basis, they are supplied on-demand as individual pumped transfers. Because of the intermittent nature of demands for many of the process reagents, facilities to flush the transfer lines between transfers are provided in order to minimize the hold-up in process lines.

5.2.18.1 Outcell Process Reagents Study Area and Hazard Evaluation Team

This was a single study area found on PFD 1614682. The hazard evaluation team members and respective disciplines are listed as follows:

J. Kisalu – Team Leader
B. Williams – Mechanical
S. Wright – Control and Instrumentation
B. Wallace – Secretary
G. Need – Process
S. Webb – Process
K. Boomer – BNFL Process and Safety
K. Colebrook – Process

5.2.18.2 Outcell Process Reagents Fault Schedules

Fault Schedule: Outcell Process Reagents

(Sheet 1)

Study Area/Keyword: Domino (Other Effects) Hazard

Event Identifier	Initiating Event	Safeguards	Frequency	Hazard Consequence	Worker Consequence	Public Consequence
1614683/142	1. Incorrect feed. 2. Misrouting.	1. Interlocks present to prevent mis-routing. 2. Adequate control and record keeping.	3	1. Continued operation of the whole process is compromised. 2. Potential for plant damage.	1	1

Study Area/Keyword: Dropped Load / Impact Hazard

Event Identifier	Initiating Event	Safeguards	Frequency	Hazard Consequence	Worker Consequence	Public Consequence
1614683/145	1. Item dropped during pump maintenance.	1. Strategic routing of objects lifted.	2	1. Potential for loss of containment of process reagents. No dose consequences to workers.	1	1

Fault Schedule: Outcell Process Reagents

(Sheet 2)

Study Area/Keyword: Explosion / Overpressure Hazard

Event Identifier	Initiating Event	Safeguards	Frequency	Hazard Consequence	Worker Consequence	Public Consequence
1614683/133	1. Water added to acid, highly exothermic.	1. Interlock to be added so that acid cannot be added without water in the tank. 2. Metered flow into tanks as opposed to mixing of chemicals on volume of substance in tank. 3. Flammable or explosive inventoryin vicinity of tanks is restricted.	3	1. Potential for operator to sustain injury, due to reaction.	3	1

Study Area/Keyword: External Dose Hazard

Event Identifier	Initiating Event	Safeguards	Frequency	Hazard Consequence	Worker Consequence	Public Consequence
1614683/125	1. Cross contamination with activity from activie areas	1. Systems designed to prevent : (i) Syphoning. (ii) Back-diffusion. (iii) Reverse flow. 2. Use of barometric heads.	3	1. Potential for increased Internal or external dose to workers.	2	1

Study Area/Keyword: Extreme Weather Hazard

Event Identifier	Initiating Event	Safeguards	Frequency	Hazard Consequence	Worker Consequence	Public Consequence
1614683/143	1. Extreme temperatures. 2. Bulk storage of inactive chemicals outside.	1. Protection afforded by the building. 2. Trace heating normally supplied.	3	1. Possibility of bulk storage caustic tank freezing outside.	1	1

Fault Schedule: Outcell Process Reagents

(Sheet 3)

Study Area/Keyword: Loss of Containment Hazard

Event Identifier	Initiating Event	Safeguards	Frequency	Hazard Consequence	Worker Consequence	Public Consequence
1614683/129	1. Mixing of incompatable reagents. 2. Adverse chemical reaction.	1. No mixing of incompatible chemicals due to bunding of tanks. 2. System is not pressurised. 3. Tanks sealed preventing exposure to fuming chemicals. 4. Access controlled to tank farms. 5. Vessel vent system prevents build-up of fumes. 6. Tanks do not deliver chamicals until their contents are analysed.7. Plant layout optimised to mitigate loss of containment eg use of gravity drainage where appropriate. 8. Hold-up of reagents in process lines is minimised.	3	1. Containment of Process Chemicals is lost. Potential for operator injury. 2. Delivery of wrong chemicals for the make-up and dilution tanks. May result in : (i) Adverse chemical reactions. (ii) Release of toxic gasses. (iii) Increased corrosion.	3	1

Fault Schedule: Outcell Process Reagents

(Sheet 4)

Study Area/Keyword: Loss of Services Hazard

Event Identifier	Initiating Event	Safeguards	Frequency	Hazard Consequence	Worker Consequence	Public Consequence
1614683/139	1. Loss of power. 2. Loss of instrument air. 3. Loss of cooling water.	1. Back-up power supplies are available.1. Manual recovery on loss of power from pumps.	2	1. Loss of instrument air is potentially a problem on;y when performing a function e.g. transfer, inability thereto. 2. Loss of demineraised water results in process hold (stop). 3. There are no hazards associated with loss of cooling water (e.g. no boiling).	1	1

5.2.19 Boiler Water Heat Recovery

Nonactive Steam condensate (i.e., condensed steam that has not contacted radioactive process solutions) is collected within the process building and pumped through a heat exchanger for preheating boiler feed water.

5.2.19.1 Boiler Water Heat Recovery Study Area and Hazard Evaluation Team

This was a single study area found on PFD ID 1614681. The hazard evaluation team members and respective disciplines are listed as follows:

Jennifer Kisalu, Team Leader and Scribe
Ben Wallace, Secretary
Steve Webb, Process
Geoff Need, Process
Steve Wright, Systems
Kayle, Boomer, BNFL, Inc.
Bev Williams, Mechanical

5.2.19.2 Boiler Water Heat Recovery Fault Schedule

Fault Schedule: Boiler Water Heat Recovery System

(Sheet 1)

Study Area/Keyword: Corrosion / Erosion Hazard

Event Identifier	Initiating Event	Safeguards	Frequency	Hazard Consequence	Worker Consequence	Public Consequence
1614682/156	1. Two phase flow in pipework causes water hammer.	1. Pipework sized to accommodate two phase flow.	3	1. Excess erosion due to water hammer with potential for loss of containment.	2	1

Study Area/Keyword: Domino (Other Effects) Hazard

Event Identifier	Initiating Event	Safeguards	Frequency	Hazard Consequence	Worker Consequence	Public Consequence
1614682/157	1. Effluent at too high a temperature. due to loss of boiler heat recovery.	1. Maximum temperature exists at which transfer can be made to TEDF.	2	1. Delay in transfer to TEDF.	1	1

Study Area/Keyword: Explosion / Overpressure Hazard

Event Identifier	Initiating Event	Safeguards	Frequency	Hazard Consequence	Worker Consequence	Public Consequence
1614682/133	1. Acid added to water.	1. Interlock could be added so that acid could not be added without water in the tank.	3	1. None Identified at this time	1	1

Fault Schedule: Boiler Water Heat Recovery System

(Sheet 2)

Study Area/Keyword: External Dose Hazard

Event Identifier	Initiating Event	Safeguards	Frequency	Hazard Consequence	Worker Consequence	Public Consequence
1614682/125	1. Steam cooling operation can form a vacuum. 2. If a failure has occurred, steam dumping may have to be locked out.	1. Protection for the detection of contamination is already part of the system. 2. No large scale contamination expected.	3	1. None Identified at this time	2	1

Study Area/Keyword: Loss of Containment Hazard

Event Identifier	Initiating Event	Safeguards	Frequency	Hazard Consequence	Worker Consequence	Public Consequence
1614682/129	1. Adverse chemical reaction.	1. Design of this area will follow the relevant codes of practice in steam systems. 2. Tanks do not deliver reagents until contents are analysed.	3	1. Delivery of wrong chemicals for the make-up and dilution tanks.	2	1
1614682/130	1. Corrosion in feed lines or tanks. 2. Location in a manned area.	1. Layout of plant optimised to mitigate loss of containment for example, use of gravity drainage where appropriate. 2. Chemical hold-up in process lines is minimised, where appropriate.	2	1. Spillage or leakage of very hot water. Potential for worker injury.	3	1

Fault Schedule: Boiler Water Heat Recovery System

(Sheet 3)

Study Area/Keyword: Loss of Services Hazard

Event Identifier	Initiating Event	Safeguards	Frequency	Hazard Consequence	Worker Consequence	Public Consequence
1614682/154	1. Loss of Power	1. Fallback - dump steam to sink.	3	1. Loss of power to pumps, Loss of instruments. 2. Loss of throughput.	1	1

Study Area/Keyword: Occupational Safety Hazard

Event Identifier	Initiating Event	Safeguards	Frequency	Hazard Consequence	Worker Consequence	Public Consequence
1614682/161	1. Expanding steam passes through valve.	1. None Identified at this time	4	1. Extreme noise hazard.	2	1

Study Area/Keyword: Ventilation - Heat Rejection Challenge Hazard

Event Identifier	Initiating Event	Safeguards	Frequency	Hazard Consequence	Worker Consequence	Public Consequence
1614682/131	1. Challenge to ventilation system due to high heat loading on system.	1. Ventilation system is appropriately sized.	4	1. None Identified at this time	1	1

5.2.20 Mechanical Handling Systems

TWRS-P Facility includes a number of mechanical handling systems. These can be categorized as, crane operations, container movements, and equipment maintenance. These operations were studied using simple sequence descriptions to cover the operations. PFDs were used as the source of information to develop the simple sequence descriptions.

5.2.20.1 Mechanical Handling Systems Study Areas and Hazard Evaluation Teams

The PFD 1614772 was a source of information for the LAW Vitrification Line Product Handling. The hazard evaluation team members and respective disciplines are listed as follows:

B. Ashcroft – Team Leader
A. Tighe – Systems
L. Marquis – Process
B. Wallace – Scribe
A. Rimmer – Mechanical
N. Bailey – Mechanical
F. Shoffner – Project Management
D. Colling – Mechanical
M. Page – Process
M. O'Brien – Mechanical

The PFD 1614774 concerned LAW/HLW Melter Maintenance. The hazard evaluation team members and respective disciplines are listed as follows:

J. Kisalu – Team Leader
B. Wallace – Scribe
L. Marquis – Process
A. Tighe – Systems
M. O'Brien – Mechanical
A. Rimer – Mechanical
N. Bailey – Mechanical

The PFD 1614778 was the source of information for LAW/HLW Solid Waste Handling. The hazard evaluation team members and respective disciplines are listed as follows:

B. Ashcroft – Team Leader
B. Wallace – Scribe
J. Nuttall – Mechanical
B. Collings – Mechanical
L. Marquis – Process
M. O'Brien – Mechanical
A. Rimmer – Mechanical
A. Tighe – Systems

The last of the mechanical handling hazard evaluation studies reviewed the Cesium Product Canister Handling Line (PFD 1614775). The hazard evaluation team members and respective disciplines are listed as follows:

B. Ashcroft – Team Leader
D. Caunce – Mechanical
J. Howarth – Process
P. Knight – Mechanical
D. Buckley – Mechanical
D. Hughes – Process
A. Tighe – Systems
A. Jenkins – Process
B. Wallace – Scribe
M. O'Brien – Mechanical

Fault Schedule: LAW Vitrification Line Product Handling

(Sheet 1)

Study Area/Keyword: Container Filling Finishing, Decontamination and Cooling. (Same applies to HLW Container). External Dose Hazard

Event Identifier	Initiating Event	Safeguards	Frequency	Hazard Consequence	Worker Consequence	Public Consequence
1614772/150	1. Bogie recovered to maintenance area with full container on bogie. 2. Shine from container.	1. Designed to ensure that it is physically impossible for bogie and container to enter that area. 2. Inert material feed system will be designed to adequately protect the operators. 3. Personal access procedures. 4. Mechanically handled by forklift etc.	3	1. Worker enters decontamination cell with source present, external dose hazard. 2. Some possiblity of external dose if container is brought up the wrong way.	2	1

Study Area/Keyword: Container Geometry Occupational Safety Hazard

Event Identifier	Initiating Event	Safeguards	Frequency	Hazard Consequence	Worker Consequence	Public Consequence
1614772/265	1. Handling of large or bulky items.	1. The design will be to the appropriate regulations and opeators will be trained as required in the use of the plant.	3	1. None identified at this time.	1	1

Fault Schedule: LAW Vitrification Line Product Handling

(Sheet 2)

Study Area/Keyword: Corrosion / Erosion Hazard

Event Identifier	Initiating Event	Safeguards	Frequency	Hazard Consequence	Worker Consequence	Public Consequence
1614772/165	1. Mechanical wear on components in inert feed system. 2. Erosion on the weld heads. 3. Volatile material incontact with the inside of the conatiner during filling (eg chloride flourides sulphides).	1. Design will allow for replacement. 2. Materials of construction will be compatible with the process undertaken.	2	1. Potential for loss of containment.	2	2

Study Area/Keyword: Decontamination Hazard

Event Identifier	Initiating Event	Safeguards	Frequency	Hazard Consequence	Worker Consequence	Public Consequence
1614772/160		1. Pour cell bogie within decontamination areas. 2. All other items disposed of as waste.	4	1. None identified at this time.	1	1

Fault Schedule: LAW Vitrification Line Product Handling

(Sheet 3)

Study Area/Keyword: Domino (Other Effects) Hazard

Event Identifier	Initiating Event	Safeguards	Frequency	Hazard Consequence	Worker Consequence	Public Consequence
1614772/142	1. Co-incident presseurisation of melter when intiating glass pour. 2. Incomplete or faulty weld.	1. Visual inspection of weld and weld parameters. 2. Buffer capacity for a day and half at maximum production. 3. Melter can be idled for a limited period.	2	1. Possible breach of pour seal and release of melter atmosphere to cell. 2. Release of activity down stream.	2	2
1614772/166	1. Build-up of gas inside container.	1. Ability of off gas system to maintain the extract on the container.	2	1. Potential for loss of containment.	3	1

Fault Schedule: LAW Vitrification Line Product Handling

(Sheet 4)

Study Area/Keyword: Dropped Load / Impact Hazard

Event Identifier	Initiating Event	Safeguards	Frequency	Hazard Consequence	Worker Consequence	Public Consequence
1614772/130	1. Toppling; small lift to make seal during inert filling.	1. Potential for dropped loads minimised by good design practice. 2. Recovery routes available in the event of a dropped load. 3. Design will provide adequate stability to container and lid. 4. Design of hoist and grappling mechanism to minimise risk. 5. Drop height will be minimised where possible. 6. High integrity containers used. 7. Speed control of crane and delgn of store equipment to minimise risk. 8. Adequate interlocking to be provided to minimise mal-operation.	2	1. Dropped container into transfer tunnel or off forklift. Potential for loss of containment. 2. Potential for dropping container into store or onto bogie - potential for loss of containment. 3. Swinging load may impact on structure or equipment.	1	1

Study Area/Keyword: Effluent / Washing Hazard

Event Identifier	Initiating Event	Safeguards	Frequency	Hazard Consequence	Worker Consequence	Public Consequence
1614772/195	1. Effluents generated by housekeeping.	1. Effleunts handled by plant waste management system.1. Housekeeping washings are carried out in this area. 2. Safe disposal route.	4	1. None identified at this time.	1	1

Fault Schedule: LAW Vitrification Line Product Handling

(Sheet 5)

Study Area/Keyword: Explosion / Overpressure Hazard

Event Identifier	Initiating Event	Safeguards	Frequency	Hazard Consequence	Worker Consequence	Public Consequence
1614772/157	1. Foreign matter in container. 2. Damp inert material placed incontainer. 3. Container not cooled prior to decontamination.	1. Dry inerting material must be used. 2. Temperature measurement with cooling period. 3. Container pre-checks. 4. UHP water flowrate may be too low for significant steam generation to take place.	3	1. Vapourisation of moisture from inert material causing container to pressurise. 2. Steam generation in booth.	1	1

Study Area/Keyword: Fire Hazard

Event Identifier	Initiating Event	Safeguards	Frequency	Hazard Consequence	Worker Consequence	Public Consequence
1614772/156	1. Molten glass causes ignition of combustibles (e.g. cabling).	1. All cabling protected from molten glass. 2. Appropriate control of operations in cell. 3. Emergency procedures following glass spillage.	3	1. Fire in area.	2	2

Fault Schedule: LAW Vitrification Line Product Handling

(Sheet 6)

Study Area/Keyword: Human Error Hazard

Event Identifier	Initiating Event	Safeguards	Frequency	Hazard Consequence	Worker Consequence	Public Consequence
1614772/145	1. Operator fails to notice wrong filling material is being used.	1. Provision of suitable interlocking.	3	1. Not known at this time.	3	3
1614772/208	1. Incorrect setting of weld parameters.	1. Control system may automatically adjust for drift. 2. Operators to confirim correct paramters are used.	3	1. Poor weld quality.	1	1

Study Area/Keyword: Instruments / Interlocks Hazard

Event Identifier	Initiating Event	Safeguards	Frequency	Hazard Consequence	Worker Consequence	Public Consequence
1614772/206	1. Filling with inert material.	1. None Identified at this time	3	1. No instrumentation currently identified for the task for filling with inert materials.	1	1

Fault Schedule: LAW Vitrification Line Product Handling

(Sheet 7)

Study Area/Keyword: Internal Dose Hazard

Event Identifier	Initiating Event	Safeguards	Frequency	Hazard Consequence	Worker Consequence	Public Consequence
1614772/211	1. Shinepath to Workers. 2. Backflow of activity via ventilation system.	1. The layout and design of the decontaminatin cell will minimise risk. 2. Design of the system will prevent backflow. 3. Decontamination facility prior to maintenance. 4. Suitable equipment will be worn. 5. Contamination eliminated by previous operations. 6. Good housekeeping to minimise spread of contamination.	2	1. Back flow contamination through feed system.	2	1

Fault Schedule: LAW Vitrification Line Product Handling

(Sheet 8)

Study Area/Keyword: Loss of Containment Hazard

Event Identifier	Initiating Event	Safeguards	Frequency	Hazard Consequence	Worker Consequence	Public Consequence
1614772/154	1. Loss of cell containment due to poor design or maintenance. 2. Leak of molten glass from pour positions. 3. Container overfilled. 4. Glass particulate escapes from pour positions / cannister surface. 5. Seal between container and pour position not effected. 6. Back diffusion through penetrations. 7.Booth doors do not close properly. 8. Leakage from booth. 9. Export of container carrying loose external contamination.	1. Potential for containment breach is minimised by good design (see standards). 2. Level measurement of container during fill. 3. Engineered seal at the pour. 4. Molten glass not transported. 5. Unoccupied pour positions sealed to prevent cool air in-rush (to be considered). 6. Glass excursions contained at sealed pour positions (see 4 above). 7. Standard approach to cell penetration design will be used. 8. Lid replaced immediately after disconnection from seal to prevent escape of glass particulate. 9. Cladded cell with collection sump and interlocks on booth doors 10. Procedures or control system. 11. Provision of deterministic safeguards. 12. There is an inert filling station on the HLW vitrification handling line.	3	1. Potential for increased dose uptake to workers. 2. Loss of glass from cell - low probability. 3. Escape of decomtamination washings or mist from the decomtamination booth. 4. Contamination of transport tunnel and store.	2	1

Fault Schedule: LAW Vitrification Line Product Handling

(Sheet 9)

Study Area/Keyword: Loss of Services Hazard

Event Identifier	Initiating Event	Safeguards	Frequency	Hazard Consequence	Worker Consequence	Public Consequence
1614772/132	1. Electrical power.	1. Control systems on UPS. 2. Hand wind facilities. 3. There are two discharge troughs.1. Manual means of recovering from local loss of power. 2. Need for emergency lighting highlighted.	3	1. Bogie stops. 2. Door movement not possible. 3. Lighting lost. 4. Loss of Throughput - operation stops. 5. Motive power lost to divertor - discharge route lost.	1	1
1614772/133	1. Compressed Air.	1. Compressed air may be on bottle backed supplies. 2. Pneumatic seals used in mechanical handling.	3	1. Process stops.	1	1
1614772/134	1. Wrong flask brought in.	1. HLW and LAW flask are different. 2. Barrier in the store to prevent transfer of high level waste into low level area and vice-versa. 3. Handling features are incompatible so it is not possible to send flasks down the wrong route.	2	1. Activity challenge to store shielding from higher activity flasks routed in error into this store.	2	2
1614772/134	1. Ventilation.	1. None Identified at this time	2	1. Cell pressurisaton due to expanding air. 2. Potential for thermal damage to equipment.	1	1
1614772/191	1. Loss of inert filling material.	1. Design for suffficifent availabillity.	3	1. Operations stopped.	1	1

Fault Schedule: LAW Vitrification Line Product Handling

(Sheet 10)

1614772/193	1. Loss of welding gas.	1. Welding gas pressure and flow indication.	3	1. Incompleted container weld. Potential for loss of containment. 2. Process stops.	1	1
1614772/194	1. Compressed Air.	1. Fail-safe design with provision of bottle-backed supplies.	3	1. None identified at this time.	1	1
1614772/223	1. Compressed Air. 2. Electrical Power	1. Possible backed-up supplies.	3	1. Potential for hold-up in plant.	1	1
1614772/249	1. Ventilation system malfunction.	1. Adequate ventilation integrity to be provided.	3	1. Cooling lost. 2. Potential for structural integrity to be compromised.	1	1

Study Area/Keyword: Mixing of Feeds Hazard

Event Identifier	Initiating Event	Safeguards	Frequency	Hazard Consequence	Worker Consequence	Public Consequence
1614772/173	1. Break down waste container delivered to pour station. 2. Wrong gas used in welding. 3. Filling container with wrong material.	1. Mechanical design of equipment will prevent docking of incorrect container. 2. Inspection and procedures, possibile use of unique connectors to welding gas supply. 3. Plant design and procedures.	2	1. Attempt made to pour glass into wrong container. 2. Unrecoverable container.	1	1

Fault Schedule: LAW Vitrification Line Product Handling

(Sheet 11)

Study Area/Keyword: Occupational Safety Hazard

Event Identifier	Initiating Event	Safeguards	Frequency	Hazard Consequence	Worker Consequence	Public Consequence
1614772/139	1. Release of filler material into operators breathing area.	1. The design will be to the appropriate regulations and opeators will be trained as required in the use of the plant. 2. These operations are carried out remotely. 3. Control of personnel access.	2	1. Operators come into contact with inert filler material. 2. Operators come into contact with high pressure fluid system, i.e. pumps motors.	3	1

Study Area/Keyword: Radiological Heat (as a consequence of the increased activity content). - Radiological Heat Hazard

Event Identifier	Initiating Event	Safeguards	Frequency	Hazard Consequence	Worker Consequence	Public Consequence
1614772/271	1. Steam generation during decontamination (Does not apply to LA containers).	1. Ventilation system designed to account for this effect.	3	1. Increased challenge to ventilation system.	1	1

Study Area/Keyword: Remote Handling Hazard

Event Identifier	Initiating Event	Safeguards	Frequency	Hazard Consequence	Worker Consequence	Public Consequence
1614772/129	1. Container handling errors. 2. Container handling geometry (HLW Product).	1. Adequate viewing provisions will be provided to assisst the operator during container movements. 2. Possible automation of store operations.	3	1. Container empty, therefore recoverable.	1	1

Fault Schedule: LAW Vitrification Line Product Handling

(Sheet 12)

Study Area/Keyword: Seismic Hazard

Event Identifier	Initiating Event	Safeguards	Frequency	Hazard Consequence	Worker Consequence	Public Consequence
1614772/143		1. Operator egress following event.	2	1. Escape route may be compromised.	4	1

Study Area/Keyword: Ventilation Hazard

Event Identifier	Initiating Event	Safeguards	Frequency	Hazard Consequence	Worker Consequence	Public Consequence
1614772/155	1. Welding of lid and inert filling of container. 2. Aerosol generatin due to high pressure sprays.	1. Localised exctraction to be considered. 2. Provide suitable ventilation system for booth.	2	1. Potential for vent. system loss to lead to risk of structural damage due to extreme temperatures in this area. 2. Welding fumes. 3. Potential for creating dust from inert fill. 4. Water spray into the vent. system. 5. Reduction in filtration system efficiency. increased dose fo workers / public.	2	2

Fault Schedule: LAW/HLW Melter Maintenance

(Sheet 1)

Study Area/Keyword: Domino (Other Effects) Hazard

Event Identifier	Initiating Event	Safeguards	Frequency	Hazard Consequence	Worker Consequence	Public Consequence
1614774/283	1. Waste mis-routing. 2. MSM operations inside cave. 3. Recovery routes (refer to Operability).	1. Dedicated tracks to prevent misdirection of high level melter into low level melter route and vice-versa. 2. Guards preventing electrodes at back of melter cannot be touched by MSM (?). 3. Recovery via MSM if skip dropped and bogie not present to receive it.	4	1. Plant throughput affected by inability to change melter(s).	1	1

Fault Schedule: LAW/HLW Melter Maintenance

(Sheet 2)

Study Area/Keyword: Dropped Load / Impact Hazard

Event Identifier	Initiating Event	Safeguards	Frequency	Hazard Consequence	Worker Consequence	Public Consequence
1614774/287	1. Attempt to place metler onto bogie that is not in position. 2. Bogie, crane or manipulator drives into shield door.	1. Bogie will be locked into position when acceppting a melter. 2. Software and hardwired interlocks provided where appropriate to prevent bogie driving into shfield door. 3. Minimum lift of consumables (only lifted during installation or removal from melter). 4. Operators trained in use of MSMs. 5. Skip to be suitably restrained on bogie or when parked. 6. Transport control stopped. 7. Inspection of melter internals at import area (man access provided). 8. Inspection in melter cell prior to connection (?).	3	1. Facility severely compromised as no melter transport possible. 2. Transport not controlled results in impact damaging melter (sensitive to impact), equipment and building structure. 3. Dropped consumerable impacts on cell. 4. Skip falls off bogie.	1	1

Study Area/Keyword: Effluent / Washing Hazard

Event Identifier	Initiating Event	Safeguards	Frequency	Hazard Consequence	Worker Consequence	Public Consequence
1614774/281	1. Bogie decontamination. 2. Abnormal activity / solids to effluent stream.	1. Effleunts handled by plant waste management system. 2. Strainers, etc., provided as per requirement.	4	1. None identified at this time.	1	1

Fault Schedule: LAW/HLW Melter Maintenance

(Sheet 3)

Study Area/Keyword: Explosion / Overpressure Hazard

Event Identifier	Initiating Event	Safeguards	Frequency	Hazard Consequence	Worker Consequence	Public Consequence
1614774/301	1. Electrical fault during melter maintenance operations.	1. None Identified at this time1. Current may be switched off during replacement of consumable items.	3	1. Shorting of electrical circuit if consumerable dropped onto melter.	1	1

Study Area/Keyword: External Dose Hazard

Event Identifier	Initiating Event	Safeguards	Frequency	Hazard Consequence	Worker Consequence	Public Consequence
1614774/265	1. Maintenance operations on failed melter.	1. Double shield door arrangement in conjunction with normal man access interlocks. 2. Containment door at breakdown end. 3. Withdraw failed melter into import area or on bogies with failed consumerables loaded. 4. Measure to prevent failed melter return to import area (detailled design issue).	4	1. Cross contamination of bogie from travelling on contaminated rails.	2	1

Study Area/Keyword: Human Error Hazard

Event Identifier	Initiating Event	Safeguards	Frequency	Hazard Consequence	Worker Consequence	Public Consequence
1614774/293	1. Human intervention - maintenance.	1. Provision of suitable interlocking. 2. Operator training and adherence to procedures.	3	1. Major effect on facility operations.	1	1

Fault Schedule: LAW/HLW Melter Maintenance

(Sheet 4)

Study Area/Keyword: Internal Dose Hazard

Event Identifier	Initiating Event	Safeguards	Frequency	Hazard Consequence	Worker Consequence	Public Consequence
1614774/295	1. Potential for glass spillages in cell during removal of consumerables. 2. Skip accumaltes contamination from glass shards. 3. Operator in vicinity due to maintenance operations.	1. Cell containment broken only during cell import operations. 2. Generation of melter dust is reduced during breakdown (to be reviewed).	3	1. Cross contamination of cleaner areas during import of clean consumerables.	1	1

Study Area/Keyword: Loss of Containment Hazard

Event Identifier	Initiating Event	Safeguards	Frequency	Hazard Consequence	Worker Consequence	Public Consequence
1614774/270	1. Incomplete connections made when installing melter. 2. Items dropped in-cell.	1. Isolation of melter off gas can be achieved using seal pot upstream of the HEMEs. 2. Dropped items in cell could be recovered with MSMs or cell cleaning equipment eg vacuum equipment.	3	1. None identified at this time.	1	1

Fault Schedule: LAW/HLW Melter Maintenance

(Sheet 5)

Study Area/Keyword: Loss of Services Hazard

Event Identifier	Initiating Event	Safeguards	Frequency	Hazard Consequence	Worker Consequence	Public Consequence
1614774/280	1. Compressed Air. 2. Electrical Power	1. Redundant systems used for air skates under melter (in case of failure or rupture of air line). 2. High integrity air supplies provided. 3. Manual recovery route ?	3	1. Glass pool may freeze. - Failure part-withdrawn allows in-bleed to melter, and draws cold air into melter. 2. Power loss results in inability to replace consumable items. (Critical only if a single air lift tube operational and requires replacement).	1	1

Study Area/Keyword: Mixing of Feeds Hazard

Event Identifier	Initiating Event	Safeguards	Frequency	Hazard Consequence	Worker Consequence	Public Consequence
1614774/317	1. Use of wrong component / use of spent component	1. Different components are incompatible. 2. Old and new components easily distinguishable by sight. E.g. new components in rack, old at skip base. 3. Performance of old component will be detected by control system.	3	1. None identified at this time.	1	1

Fault Schedule: LAW/HLW Melter Maintenance

(Sheet 6)

Study Area/Keyword: Occupational Safety Hazard

Event Identifier	Initiating Event	Safeguards	Frequency	Hazard Consequence	Worker Consequence	Public Consequence
1614774/288	1. Handling operations. 2. Maintenance equipment contacts live electrical equipment.	1. The design will be to the appropriate regulations and opeators will be trained as required in the use of the plant. Preference will be to use quiet air skates. 2. MSMs locked off when not in use. At detailed design,during layout suitable protection for live parts to be provided.	3	1. Operator injury. 2. Operator hearing impaired by exposure to loud noise. 3. Severe injury to operator and possible death (upto 3MW of power).	4	1

Study Area/Keyword: Remote Handling Hazard

Event Identifier	Initiating Event	Safeguards	Frequency	Hazard Consequence	Worker Consequence	Public Consequence
1614774/279	1. Recovery from certain positions, e.g. bogie stuck.	1. Remote handling used in melter and melter cell.	4	1. None identified at this time.	1	1

Study Area/Keyword: Seismic Hazard

Event Identifier	Initiating Event	Safeguards	Frequency	Hazard Consequence	Worker Consequence	Public Consequence
1614774/285	1. Shaking of Melter.	1. Possible seismic qualification.	2	1. Melter will fail (refractory bricks are not mortared). No sigificant consequences envisaged.	3	3

Fault Schedule: LAW/HLW Melter Maintenance

(Sheet 7)

Study Area/Keyword: Shielding Hazard

Event Identifier	Initiating Event	Safeguards	Frequency	Hazard Consequence	Worker Consequence	Public Consequence
1614774/268	1. Mitigation of direct shine from source.	1. Worse case scenario assumed for bulk shielding thickness.	4	1. None identified at this time.	1	1

Study Area/Keyword: Ventilation Hazard

Event Identifier	Initiating Event	Safeguards	Frequency	Hazard Consequence	Worker Consequence	Public Consequence
1614774/271	1. Airborne contamination hazard in area.	1. Filters in ventilation system. 2. Melter off-gas at a depression with regard to melter cell - volatalised material not released to melter cell. 3. Use of air-skates not likely to challenge ventilation system (small in comparison with cell volume).	4	1. Dust from breakdown going into ventialtion. Increased challenge to vneitlation system.	1	1

Fault Schedule: LAW/HLW Solid Waste Handling

(Sheet 1)

Study Area/Keyword: (Including Link Tunnel) Loss of Containment Hazard

Event Identifier	Initiating Event	Safeguards	Frequency	Hazard Consequence	Worker Consequence	Public Consequence
1614778/326	1. Loss of seal between breakdown cell and pour cell. 2. Lowering of container from seal and movement of container. 3. Use of UHP water for decontamination. 4. Poorly or incorrect fitted lid.	1. Appropriate containment between the two cells. 2. Lid to be replaced directly after seal. Lid brough into the cave with the container. Lid replaced at each station. 3. Lid welded. 4. Localised clean-up of seal area.	3	1.Contamination spreads into pour cell. 2. Potential for loss of containment, i.e. release of debris into pour cell. 3. Ingress of water into container - potential for generation of radiolytic hydrogen.	1	1

Study Area/Keyword: (Including Product Handling) Occupational Safety Hazard

Event Identifier	Initiating Event	Safeguards	Frequency	Hazard Consequence	Worker Consequence	Public Consequence
1614778/343	1. Risk to eyesight due to cutting operations (exposure to laser light).	1. Standard safety procedures for laser light use.	3	1. Operator injury to eyesight.	3	1

Fault Schedule: LAW/HLW Solid Waste Handling

(Sheet 2)

Study Area/Keyword: Container Filling & Breakdown Cell Operations (Higher Activity). - External Dose Hazard

Event Identifier	Initiating Event	Safeguards	Frequency	Hazard Consequence	Worker Consequence	Public Consequence
1614778/321	1. Waste container generated from high level breakdown operations carrying high level waste brought into low level line. 2. Contamination on crane. 3. Loaded container withdrawing to operating area. 4. Refractory bricks with concentrated Ceasuim exceeds LAW limits.	1. High integrity and diverse monitoring. 2. Container loading procedures and interlocking. 3. Decontamination area.	2	1. Shielding insufficient in the low level line to cater for inadvertant ingress of high activity material.	2	1

Study Area/Keyword: Container Filling & Breakdown Cell Operations - External Dose Hazard

Event Identifier	Initiating Event	Safeguards	Frequency	Hazard Consequence	Worker Consequence	Public Consequence
1614778/320	1. Transportation of contamination into maintenance areas.	1. Standard personnel access regime to cranes etc in maintenance areas. 2. Consideration to be given to manual release of manipulator jaws.	4	1. Increased dose uptake to workers.	2	1

Fault Schedule: LAW/HLW Solid Waste Handling

(Sheet 3)

Study Area/Keyword: Corrosion / Erosion Hazard

Event Identifier	Initiating Event	Safeguards	Frequency	Hazard Consequence	Worker Consequence	Public Consequence
1614778/338	1. Mechanical wear on components.	1. Design and choice of materials appropriate to duty and environment. 2. Need for good house keeping and for containment of errosive/corrosive arinsings	2	1. Particulate ingress into cell equipment.	12	1

Study Area/Keyword: Decontamination Hazard

Event Identifier	Initiating Event	Safeguards	Frequency	Hazard Consequence	Worker Consequence	Public Consequence
1614778/333	1. Loading / disconnection of seal.	1. Local clean-up apparatus and/or segregation from pour cell. 2. Crane, MSMs and manipulators have dedicated facilities.	4	1. Contamination in pour cell - due to container loading/disconnection of seal.	1	1

Fault Schedule: LAW/HLW Solid Waste Handling

(Sheet 4)

Study Area/Keyword: Dropped Load / Impact Hazard

Event Identifier	Initiating Event	Safeguards	Frequency	Hazard Consequence	Worker Consequence	Public Consequence
1614778/342	1. Dropped lid. 2. Container falling before lid fixed.	1. Design of lid handling grab to prevent lid dropping. 2. Transfer distance minimised, low transfer velocity. 3. Container suitably constrained during transfer. 4. Major loads; e.g. melt lid, will have numerous lift points. 5. Facility for installing MSM for recovery of dropped lid. 6. Cell design minimises effects of a dropped load	3	1. Inability to lid container - lid causes obstructuion on track. 2. Breakdown waste spilled onto cell floor - recovery difficult.	1	1

Study Area/Keyword: Explosion / Overpressure Hazard

Event Identifier	Initiating Event	Safeguards	Frequency	Hazard Consequence	Worker Consequence	Public Consequence
1614778/329	1. Incorrect use of glass shattering devices. 2. Breach of compressed air line.	1. Consider means of air flow limitation. 2. Chemical glass-shattering has been considered. No combustible dust has been identified folling its use.	3	1. Pressurisation of container.	1	1

Fault Schedule: LAW/HLW Solid Waste Handling

(Sheet 5)

Study Area/Keyword: Fire Hazard

Event Identifier	Initiating Event	Safeguards	Frequency	Hazard Consequence	Worker Consequence	Public Consequence
1614778/328	1. Cutting operations generating high temperatures / ignition source. 2. Ignition of combustibles (e.g. hydraulic fluids).	1. None Identified at this time	3	1. Fire in area.	2	2

Study Area/Keyword: Internal Dose Hazard

Event Identifier	Initiating Event	Safeguards	Frequency	Hazard Consequence	Worker Consequence	Public Consequence
1614778/323	1. Airborne contamination from handling operations.	1. Appropriate ventilation and filtration provided.	4	1. Breakdown procedures likely to create dust. Potential for increased dose uptake to Workers.	1	1

Study Area/Keyword: Loss of Services Hazard

Event Identifier	Initiating Event	Safeguards	Frequency	Hazard Consequence	Worker Consequence	Public Consequence
1614778/335	1. Loss of services.	1. None Identified at this time	3	1.Process stops.	1	1

Fault Schedule: LAW/HLW Solid Waste Handling

(Sheet 6)

Study Area/Keyword: Mixing of Feeds Hazard

Event Identifier	Initiating Event	Safeguards	Frequency	Hazard Consequence	Worker Consequence	Public Consequence
1614778/345	1. Product container introduced to breakdown waste filling station. 2. Breakdown container poistioned on pour cell at inert filling station (no inert fill on HLW line).	1. Container lid design prevents misloading of container. 2. Mechanical means should physically prevent this scenario. 3. Tracking facility to prevent inadvertent attempt to fill (higher activity). 4. Adequate tracking prevents misrouting.	3	1. Potential for mis-routing breakdown waste. 2. Out of specification container could be exported from plant. 3. Solid waste container may be of lower integrity than the glass container. Wall thickness of material significant.	2	1

Study Area/Keyword: Ventilation Hazard

Event Identifier	Initiating Event	Safeguards	Frequency	Hazard Consequence	Worker Consequence	Public Consequence
1614778/327	1. Genereation of dust from breakdown operations.	1. Greater deppression in pour cell. 2. Cascade between adjacent C5 areas.	3	1. Spread of contamination. Increased challenge to venitlation system filters.	2	2

Fault Schedule: Cs Line

(Sheet 1)

Study Area/Keyword: Container Import/Placement In Rack/Fill - External Dose Hazard

Event Identifier	Initiating Event	Safeguards	Frequency	Hazard Consequence	Worker Consequence	Public Consequence
1614775/385	1. Posting out of full canister or container (in error). 2. Shinepath from product.	1. Gamma interlocking tool and appropritate shielding. 2. Software control /interlock on crane to limit its operations.	2	1. Increased dose uptake to workers.	4	1

Study Area/Keyword: Corrosion / Erosion Hazard

Event Identifier	Initiating Event	Safeguards	Frequency	Hazard Consequence	Worker Consequence	Public Consequence
1614775/421	1. Corrosion of pipework.	1. Design and choice of materials appropriate to duty and environment (In cell process pipework should be nitric acid grade steel (acid at 70 degC).	2	1. Potential for loss of containment of nitric acid feed.	3	1

Study Area/Keyword: Domino (Other Effects) Hazard

Event Identifier	Initiating Event	Safeguards	Frequency	Hazard Consequence	Worker Consequence	Public Consequence
1614775/399	1. Concentrated nitric acid solution (8M) not neutralised or cooled. 2. Lowering of container/canister to one already present on bogie	1. Ventialtion system. 2. Physical restrictions and interlocks present to prevent cannister being loaded onto one already present on bogie (Further work required to determine their nature). 3. Operator has a good viewing position during operations.	2	1. Spillage of nitric acid in-cell resulting in evolution of fumes.	2	2

Fault Schedule: Cs Line

(Sheet 2)

Study Area/Keyword: Dropped Load / Impact Hazard

Event Identifier	Initiating Event	Safeguards	Frequency	Hazard Consequence	Worker Consequence	Public Consequence
1614775/498	1. Drop of a 600kg load through a height of 5m.	1. Provisions to prevent premature release of load. 2. Recovery of container and bogie following event.	2	1. Container damage. Potential for loss of containment.	1	1

Study Area/Keyword: Effluent / Washing Hazard

Event Identifier	Initiating Event	Safeguards	Frequency	Hazard Consequence	Worker Consequence	Public Consequence
1614775/420	1. Cell effluents. 2. Decontamination effluents.	1. Cell effleunts will collected and diposed in the appropriate manner. 2. Decontamination carried out in closed in booth, with decontamination and collection facilities.	4	1. Potential for increased dose uptake to workers.	1	1

Study Area/Keyword: Explosion / Overpressure Hazard

Event Identifier	Initiating Event	Safeguards	Frequency	Hazard Consequence	Worker Consequence	Public Consequence
1614775/439	1. Water left in canister after lid fixed.	1. Consideration to be given to recovery from blocked ports on canister.	3	1. Radiolosys leading to overpressurisation.	3	2

Fault Schedule: Cs Line

(Sheet 3)

Study Area/Keyword: Fire Hazard

Event Identifier	Initiating Event	Safeguards	Frequency	Hazard Consequence	Worker Consequence	Public Consequence
1614775/438	1. Plasma welding a possible source of ignition.	1. Plasma welding proven on a similar operating waste vitrification plant (WVP at Sellafield U.K.). 2. Fire load restricted in area. 3. Shrouded welding head. 4. Other physica barriers.	2	1. Fire in area.	3	3

Study Area/Keyword: Human Error Hazard

Event Identifier	Initiating Event	Safeguards	Frequency	Hazard Consequence	Worker Consequence	Public Consequence
1614775/431	1. Mis-connection of hoses. 2. Mis-placing of hoses.	1. Design of couplings. 2. Adequate training and procedures.	3	1. Loss of containment of ?	1	1

Study Area/Keyword: Instruments / Interlocks Hazard

Event Identifier	Initiating Event	Safeguards	Frequency	Hazard Consequence	Worker Consequence	Public Consequence
1614775/430	1. Cs Loading.	1. Loading determined by gamma monitors.	3	1. Potential for increased external dose uptake.	3	1

Fault Schedule: Cs Line

(Sheet 4)

Study Area/Keyword: Internal Dose Hazard

Event Identifier	Initiating Event	Safeguards	Frequency	Hazard Consequence	Worker Consequence	Public Consequence
1614775/386	1. Airborne contamination during normal or maintenance operations (there may also be a shinepath from Cs product - see external dose record 1614775/385 and 1614772/211).	1. Gamma interlock. 2. Ventilation systems. 3. Cascade of airflow from areas of lower to higher potential airborne contamination areas.	3	1. Potential for increased worker dose uptake.	2	1

Study Area/Keyword: Loss of Containment Hazard

Event Identifier	Initiating Event	Safeguards	Frequency	Hazard Consequence	Worker Consequence	Public Consequence
1614775/389	1. Gamma door and posting hatch open simultaneously. 2. Faulty weld allowing subequent ingress of water should decontamination be necessary.	1. There will be a suitable level of interlocking to prevent simultaneous opening. 2. DOE checking may reveal spillage (?). 3. Spillage of Caesium Nitrate is likely to plate out therefore will not become airborne. 4. Wash-up following incident.	2	1. Escape of resin (an inert material). 2. Leakage through damaged seals.	3	2

Fault Schedule: Cs Line

(Sheet 5)

Study Area/Keyword: Loss of Services Hazard

Event Identifier	Initiating Event	Safeguards	Frequency	Hazard Consequence	Worker Consequence	Public Consequence
1614775/396	1. Electrical power. 2. Compressed Air.	1. Hand operated equipment. 2. Through wall drive with the possibility of manual winding, for hatch.	3	1. Operations stopped. 2. No safety implications.	1	1

Study Area/Keyword: Mixing of Feeds Hazard

Event Identifier	Initiating Event	Safeguards	Frequency	Hazard Consequence	Worker Consequence	Public Consequence
1614775/429	1. Mesh fails. 2. Placing second canister into a container already holding a canister. 3. Placing canister into container part full of solid waste - confusion between ingoing and outgoing waste streams.	1. Mechanical barrier could be placed on the outlet of the canister. 2. The system of container and canister numbering willl require confirmation before canister is place. 3. Control system will be designed to prevent this condtion. 4. Record keeping and procedures.	2	1. Carry over of the resin form one canister to the next. 2. Mechanical damage. 3. Toppled load.	1	1

Fault Schedule: Cs Line

(Sheet 6)

Study Area/Keyword: Product Canister and Container and Canister/Container Export. Container Final Storage via Transfer Bogie). - External Dose Hazard

Event Identifier	Initiating Event	Safeguards	Frequency	Hazard Consequence	Worker Consequence	Public Consequence
1614775/432	1. Canister loaded with too much ceasium. 2. Posting through without a continer lid.	1. Amount of Cs limited in canister. 2. Gamma monitor of the first canister as Cs is pumped through. 3. Secondary filter on the outlet line to prevent carry over of CST. 4. Hatch will not open unless a container with lid is present. 5. If man access to cell is permitted, pre-checks to establish that no canister is present under the posting hatch.	3	1. Container exceed service dose limits.	2	1

Study Area/Keyword: Remote Handling Hazard

Event Identifier	Initiating Event	Safeguards	Frequency	Hazard Consequence	Worker Consequence	Public Consequence
1614775/394	1. Recovery of dropped item.	1. Full coverage of floor available. 2. Bogie and crane will be remotely handled.	2	1. None identified at this time.	1	1

Fault Schedule: Cs Line

(Sheet 7)

Study Area/Keyword: Ventilation Hazard

Event Identifier	Initiating Event	Safeguards	Frequency	Hazard Consequence	Worker Consequence	Public Consequence
1614775/486	1. Airborne contamination hazard in area.	1. Air flows will prevent contamination spreading along the tunnel. 2. Airflows are in the direction of the main cell.	3	1. Potential for increased dose uptake to Workers.	2	1

5.2.21 Heating, Ventilation, and Air-Conditioning Systems

The process vessel are maintained at a pressure less than the surrounding process cells by the vessel ventilation system. This is to prevent the dispersion of radioactive materials to the process cells, through the pneumatic instrument lines, and to occupied areas. The vessel ventilation system passed the air exhausted from the process vessels, pulse jet mixers, and RFD devices through a HEME to separate entrained droplets. The HEME discharges the coalesced water droplets to collection vessels for recycle to the pretreatment process.

The vessel ventilation system, LAW melter and the HLW melter primary offgas treatment exhaust air streams are combined and processed through the secondary off-gas treatment system. The secondary offgas treatment system consists of a wet scrubber and HEPA filters.

5.2.21.1 Heating, Ventilation, and Air-Conditioning Systems Study Areas and Hazard Evaluation Team

The PFD 1614700 was the source of information for the plant HVAC. The hazard evaluation team members and respective disciplines are listed as follows:

J. Kisalu – Team Leader
D. Caunce – Mechanical
M. Coleman – Process
B. Swinerton – Vent
G. Booth – Vent
B. Wallace – Scribe
B. Williams – Mechanical
I. Roberts – Systems

5.2.21.2 Heating, Ventilation, and Air-Conditioning System Fault Schedule

Fault Schedule: HVAC

(Sheet 1)

Study Area/Keyword: Corrosion / Erosion Hazard

Event Identifier	Initiating Event	Safeguards	Frequency	Hazard Consequence	Worker Consequence	Public Consequence
1614700/521	1. Corrosion of ductwork.	1. Mild steel maintained (e.g .painted). 2. Ductwork is high integrity stainless steel. 3. Melter off-gas cleaned before reaching area.	2	1. Chilled water leaking into system.	1	1

Study Area/Keyword: Decontamination Hazard

Event Identifier	Initiating Event	Safeguards	Frequency	Hazard Consequence	Worker Consequence	Public Consequence
1614700/515	1. Contamination on ductwork and filters.	1. Two stage filtration performed in filter cave.2. Decontamination performed under recirculation.	3	1. Potential for increased dose uptake to Workers and Public.	2	2

Fault Schedule: HVAC

(Sheet 2)

Study Area/Keyword: Domino (Other Effects) Hazard

Event Identifier	Initiating Event	Safeguards	Frequency	Hazard Consequence	Worker Consequence	Public Consequence
1614700/522	1. Loss of water jacket to melter.	1. HEPA filtration could be provided on inlet to other buildings to prevent activity build-up in those areas.	2	1. Increased heat loads on meleter recirculation system. 2. Effects localised if extract system lost. 3. Melter shut-down if entire system malfunctions. 4. Heating or cooling may be lost in some areas. 5. Building habitability reduced or lost in the event of extended system shut-down. 6. Activity release from adjacent facility.	2	2

Study Area/Keyword: Dropped Load / Impact Hazard

Event Identifier	Initiating Event	Safeguards	Frequency	Hazard Consequence	Worker Consequence	Public Consequence
1614700/525	1. Filter change. 2. Dropped filter.	1. Crane in filter cell used for remote filter changes. 2. Recovery by manual means.	2	1. Contamination spread around cave.	1	1

(Sheet 3)

Fault Schedule: HVAC

Study Area/Keyword: Effluent / Washing Hazard

Event Identifier	Initiating Event	Safeguards	Frequency	Hazard Consequence	Worker Consequence	Public Consequence
1614700/545	1. Swabbing.	1. Swabs handled in an appropriate manner. 2. Safe disposal of swabs.	4	1. None identified at this time.	1	1

Study Area/Keyword: Explosion / Overpressure Hazard

Event Identifier	Initiating Event	Safeguards	Frequency	Hazard Consequence	Worker Consequence	Public Consequence
1614700/512	1. Pressurisation of cell due to vent. system maloperation.	1. Pressurisation not affected if recirculation fans are stopped. 2. Significant cell pressure excursion not likely to cause explosion.	1	1. Potential for explosion.	3	2

Study Area/Keyword: Extreme Weather Hazard

Event Identifier	Initiating Event	Safeguards	Frequency	Hazard Consequence	Worker Consequence	Public Consequence
1614700/606	1. Sand storm. 2. Scrub/bush Fire (extreme temperature).	1. Sand filters on inlet preventing ingress to building. 2. Building of sufficient external integrity. 3. Ventilation systems sited and protected accordingly against external fires.	4	1. Sand ingress to Building. 2. Fire outside building, ventilation system challenged.	1	1

Fault Schedule: HVAC

(Sheet 4)

Study Area/Keyword: Fire Hazard

Event Identifier	Initiating Event	Safeguards	Frequency	Hazard Consequence	Worker Consequence	Public Consequence
1614700/511	1.Filter fire.	1. Recirculation system. 2. Venitlaiton system responds to a fire maintaining extract and therefore building containment. 3. Melter would be turned off.	3	1. Challenge to ventilation system due to incell Fire.	2	2
1614700/538	1. Fire within ventilated area.	1. Maintain C5 extract operational.	3	1. Possiblity of filter fire.	3	3

Study Area/Keyword: Human Error Hazard

Event Identifier	Initiating Event	Safeguards	Frequency	Hazard Consequence	Worker Consequence	Public Consequence
1614700/531	1. Human intervention - operation. 2. Human intervention - maintenance.	1. System is automatic. 2. Filters are asymetric cannot be fitted the wrong way round. 3. Training and Procedures.	3	1. None identified at this time.	1	1

(Sheet 5)

Fault Schedule: HVAC

Study Area/Keyword: HVAC - Occupational Safety Hazard

Event Identifier	Initiating Event	Safeguards	Frequency	Hazard Consequence	Worker Consequence	Public Consequence
1614700/551	1. Filter change operations.	1. Filter change a push / slide operation. 2. Filter change requires no manual lifting. 3. Permit to Work system in operation during maintenance operations. 4. Equipment is located in a restricted access area.	4	1. Potential for increased dose uptake to maintainers.	1	1

Study Area/Keyword: Instruments / Interlocks Hazard

Event Identifier	Initiating Event	Safeguards	Frequency	Hazard Consequence	Worker Consequence	Public Consequence
1614700/580	1. Contamination spread. 2. Shut-down of systems.	1. Selective indications of healthy condition minimising contamination spread e.g. containment door between melter and breakdoen area. 2. Interlocked with the C5 system such that C3 extract is shut-off if the C5 is down. 3. If C3 extract lost Isolation dampers in C2 areas would close shutting off C2 supply	3	1. Potential for increased contamination spread to operating areas. Potential for increased dose uptake to Workers.	2	2

Fault Schedule: HVAC

(Sheet 6)

Study Area/Keyword: Internal Dose Hazard

Event Identifier	Initiating Event	Safeguards	Frequency	Hazard Consequence	Worker Consequence	Public Consequence
1614700/558	1. Excess dust. 2. UHP Spray.	1. Activity monitors to detect breakthrough. 2. All remote handling done in cell or cave. 3. Dust control. 4. Spray removal from UHP decontamination. 5. Standard procedures for safe handling.	3	1. Potential for increased dose uptake to workers.	2	2

(Sheet 7)

Fault Schedule: HVAC

Study Area/Keyword: Loss of Containment Hazard

Event Identifier	Initiating Event	Safeguards	Frequency	Hazard Consequence	Worker Consequence	Public Consequence
1614700/510	1.Blinding of the filters.	1. Picked up by activity monitor and delta P measurements.	3	1. Potential for increased dose uptake to Workers.	2	2
1614700/536	1. Filter drums dropped during handling. 2. Faults in filter crushing machine. (Filter crushing as on a waste vitrification plant (WVP line 3) at Sellafield, U.K.) 3. Fans stop. If five fans stop : potential for back flow across any gaps, eg shield doors. 4. Breach of ductwork.	1. If C3 fans stop and C5 extract keeps going whilst C2 system is stopped, some of the C2 areas might be kept going. 2. If C2 extract lost differential pressures still maintained to some extent. 3. Filter crushing operations will be the subject of further hazard studies at the appropriate time.	3	1. Slow outleakeages into cell areas from vessel vent. and from C5, C4 areas, etc,.	2	2

Study Area/Keyword: Loss of Service Hazard

Event Identifier	Initiating Event	Safeguards	Frequency	Hazard Consequence	Worker Consequence	Public Consequence
1614700/519	1. Loss of air.	1. Dampers fail safe (to operating position).	3	1. Can only move dampers manually.	1	1

Fault Schedule: HVAC

(Sheet 8)

Study Area/Keyword: Loss of Services Hazard

Event Identifier	Initiating Event	Safeguards	Frequency	Hazard Consequence	Worker Consequence	Public Consequence
1614700/517	1. Electrical power.	1. Diesel backed fans on recirculation. 2. Structral integrity will remain unaffected by any credible temperature excursions in this area. 3. No direct supplies are required to this area (service and maintenance operations will be affected).	3	1. Fans stop. This may lead to an unacceptable rise in cell temperature. This may compromise the cell structure. 2. Inability to change filters (filter change required only one to two years).	1	1
1614700/518	1. Loss of chilled water.	1. Structral integrity will remain unaffected by any credible temperature excursions in this area.	3	1. Loss of cooling. Increased heat load may challenge structural integrity.	1	1

Study Area/Keyword: Occupational Safety Hazard

Event Identifier	Initiating Event	Safeguards	Frequency	Hazard Consequence	Worker Consequence	Public Consequence
1614700/526	1. Maintenance operations.	1. Adequate administrative controls - Permit tot Work system adopted.	4	1. Potential for increased dose uptake to Workers.	1	1

Study Area/Keyword: Remote Handling Hazard

Event Identifier	Initiating Event	Safeguards	Frequency	Hazard Consequence	Worker Consequence	Public Consequence
1614700/516	1. Remote Handling of Filters.	1. Remote handling required only if filters are in filter cave.	4	1. None identified at this time.	1	1

(Sheet 9)

Fault Schedule: HVAC

Study Area/Keyword: Ventilation / Melter Recirculation Vessel Vent and Melter Gas Treatment Plant - External Dose Hazard

Event Identifier	Initiating Event	Safeguards	Frequency	Hazard Consequence	Worker Consequence	Public Consequence
1614700/505		1. Ductwork shielded to filters. 2. Activity monitored downstream of filters. 3. On detection of breakthrough change to standby filter bank is made manually. 3. Activity monitor to show that fan is safe for hands on maintenance. 4. Primary and secondary filtration provided incase of failure on vessel vent and off-gas. 5. The shielding assessment is based on a worst-case scenario of 1kg of glass on the filters. 6. Ductwork routed such that plate-out is minimised. 7. Remote change-out and flasking of filters due to high activity present on the filters. 8. Filters with suspected lower acitvity and suitable for hands-on change out will be monitored prior to any handling operations. 9. Flask containingfilter is swabbed and decontaminated if necessary.	3	1. Plateout in the ductwork. 2. Potential for increased actvity uptake to workers.	2	2

Fault Schedule: HVAC

(Sheet 10)

Study Area/Keyword: Ventilation Hazard

Event Identifier	Initiating Event	Safeguards	Frequency	Hazard Consequence	Worker Consequence	Public Consequence
1614700/537	1. Filter crushing operations.	1. C5 vent extract provided.	4	1. Increased challenge to ventilation system.	1	1

This page intentionally left blank.

6.0 Hazard Evaluation Results Summary

The hazard evaluation studies described in Chapter 5, “Hazard Evaluation by Process Step”, identified and recorded in the fault schedules events that could have potential consequences to workers, the public, or the environment. For each event, the hazard evaluation team assigned and recorded consequence categories for the worker and the public. The fault schedule database was sorted to provide a list of those events with public or worker consequence greater than 2. The definitions for the consequence categories are given in Table 3-5, “Definition of Consequences”.

The hazard evaluation teams assigned the consequence categories based on the assumption that certain mitigating design features (e. g., cell ventilation systems) were functioning as intended. Therefore, the sorting of the events that are assigned the higher consequence categories is preliminary to the ranking process described in Section 3.5, “Candidate Accident Selection”. However, the sorting process does provide a preliminary indication of the accidents of concern to the worker and the public.

The selection of candidate accident scenarios that will be documented in the Initial Safety Analysis Report (ISAR) will consider the entire suite of events identified in the hazard evaluation. The accident analysis identifies the requirements for engineered design features to mitigate the consequences of the accidents. Therefore, the events judged to have the potential for high unmitigated consequences to the public or the collocated worker must be examined for that selection.

6.1 Preliminary Results

This section presents the events that resulted from sorting the fault schedule database for those assigned worker or public consequence categories greater than 2. An important function of the hazard analysis is to provide information to assess the safety of the facility worker. The events selected as being of concern for worker safety fell into a number of categories. They are discussed by category, followed by discussion of events affecting the collocated worker and those affecting the public. The events from the fault schedule that affect the facility worker tend to occur where radioactive systems interface with nonradioactive systems, or from out of cell mechanical handling operations.

6.1.1 Worker Safety-Related Events Involving Contact with High-Temperature, Corrosive, Toxic, or Radioactive Materials

Of the events selected as being of concern for worker safety, a group of events involving potential injury from contact with high-temperature, corrosive, toxic, or radioactive material is identified. The events and their consequences are summarized from the fault schedules and presented in Table 6-1.

Table 6-1. Worker Safety-Related Events Involving Contact with High-Temperature, Corrosive, Toxic, or Radioactive Material

Event Number	Event Identifier	System	Consequence Description
Exposure to High-Temperature Materials			
1	1614682/130	Boiler Water Heat Recovery System	Spillage or leakage of very hot water. Potential for worker injury
2	1614683/133	Outcell Process Reagents	Potential for operator to sustain injury, due to reaction. (Highly exothermic reaction from water addition to acid.)
Exposure to Heat and Fumes from Fire			
3	3200/140	Glass Melter	Worker injury from electrical fire or pump motor fire.
4	3200/116	Glass Melter	Worker exposed to fire because of ignition of flammable glass forming materials.
5	1614776/275	Waste Store Operations	Worker exposure to fire. (Diesel fuel fire)
6	1614775/438	Cesium Line	Worker exposure to fire. (Plasma welding possible source of ignition)
Exposure to Toxic or Corrosive Materials			
7	1614669/156	Cs/Tc Fresh Resin Addition	Potential for contact with toxic materials. Health detriment resulting from contact with spilled resins or reagents (e.g., NaOH).
8	1614669/158	Cs/Tc Fresh Resin Addition	Exposure to toxic fumes resulting from a resin fire, or chemical reaction between resin and nitric acid.
9	1614667/135	Cs and Tc Nitric Acid Recovery	Potential for contact with concentrated nitric acid.
10	3200/114 and /130	Glass Melter	Potential for contact with toxic glass-forming materials. Worker health detriment.
11	1614683/129	Outcell Process Reagents	Operator exposure to hazardous chemicals because of adverse chemical reaction from mixing incompatible reagents.
12	1614772/139	LAW Vitrification Line Product Handling	Operator exposure to inert filler material or high-pressure fluid system.
13	1614776/287 and 299	Waste Store Operations	Exposure to hazardous materials; dropped load/ impact hazard.
14	1614775/421	Cesium Line	Potential worker contact with nitric acid because of corrosion of pipework.

Table 6-1. Worker Safety-Related Events Involving Contact with High-Temperature, Corrosive, Toxic, or Radioactive Material

Event Number	Event Identifier	System	Consequence Description
Exposure to Radioactive Materials (Inhalation or Ingestion)			
15	3200/265	Glass Melter	Worker exposed to contamination because of dropped components during removal or replacement of melter and/or components.
16	1614772/166	LAW Vitrification Line Product Handling	Operator exposure to radioactive airborne contamination because of loss of containment from gas buildup inside the container.
17	1614775/439	Cesium Line	Worker exposure to airborne radioactive materials because of canister rupture from overpressurization by radiolytic gases. (Canister not properly dried before sealing.)
18	1614673/304	HLW Vitrification Offgas Treatment	Exposure to radioactive materials because of damage to contaminated components resulting from a drop.
19	1614672/239	LAW Vitrification Offgas Treatment	Release of radioactive material from cell because of explosion in cell.
20	1614687/171	LAW Vitrification Emergency Offgas System	Release of radioactive material from cell because of overpressurization of melter.
21	1614700/512	HVAC	Operator injury from rupture of cell confinement because of ventilation system maloperation.
Exposure to Direct Radiation			
22	1614776/295	Waste Store Operations	Radiation exposure to operator; gamma gate is open when operator is in the flask introduction area.
23	1614775/385	Cesium Line Container Import/stillage fill system	High radioactive exposure to worker because of inadvertent posting out of full canister or container.
24	1614776/344	Waste Store Operations	Potential for increased radioactive exposure to operators. (Lid not on canister and gamma gate open.)
25	1614776/271	Waste Store Operations	Potential for increased radioactive exposure to workers. (Debris left in flask)
26	1614775/389	Cesium Line	Operator exposure to cesium radiation. (Gamma door and posting hatch open at the same time.)
27	1614775/430	Cesium Line	Worker exposure to cesium radiation because of improper cesium loading of the canister.

6.1.2 Worker Safety-Related Events Involving Nuclear Criticality

A nuclear criticality can occur by fulfilling the condition that a medium capable of sustaining a nuclear fission chain reaction has an effective multiplication factor, k_{eff} equal to unity. Workers in the vicinity of an unplanned criticality are subject to intense and potentially lethal radiation.

The potential initiator of a nuclear criticality, accumulation of fissile material, is identified in the hazard evaluation studies of ion exchange, the melter, the receipt tanks, and the evaporator. Potential for nuclear criticality is not expected, because there is not enough inventory of fissile materials to pose a criticality risk. Preliminary analysis found in all cases described below that there was no potential for a criticality. These results will be finalized in ISAR, Section 6, “Nuclear Criticality Safety”.

6.1.3 Worker Safety-Related Events Involving Occupational Safety Hazard

Some of the hazards identified by the hazard evaluation review team come under the category of occupational hazards; that is, hazards that are typically found in industrial situations, and for which adherence to national codes and standards assures adequate worker protection.

Table 6-2 lists events that come under the category of occupation safety hazards.

Table 6-2. Worker Safety-Related Events Involving Occupational Safety Hazard

Event Number	Event Identifier	System	Consequence Description
1	1614669/174	Cesium/Technetium Fresh Resin Addition	Resin-handling operations can lead to falls and lifting injuries.
2	1614778/343	LAW/HLW Solid Waste Handling	Laser cutting provides a potential of injury to the eye.
3	1614774/288	LAW/HLW Melter Maintenance System	Electrical shorting can result in severe injury to the operator.

6.1.4 Worker Safety-Related Events Involving Natural Phenomena Hazard

The hazard evaluation process did not systematically address the seismic hazard. A seismic design strategy for the facility as a whole is being developed based on the operating benefits of a passive system versus the cost of the seismic upgrades. Appropriate seismic design of individual systems, structures, and components is based on the results of the accident analysis in the ISAR.

The fault schedule identifies seismic hazards resulting in damage to tanks and transfer lines leading to loss of confinement events that may affect the facility worker as well as the collocated worker and the public. One seismic event was identified that would affect the worker but not necessarily lead to releases from the facility.

Table 6-3 lists the seismic events with significant consequences to the facility worker.

Table 6-3. Worker Safety-Related Events Involving Natural Phenomena Hazard

Event Number	Event Identifier	System	Consequence Description
1	1614667/131	Cesium and Technetium Acid Recovery	Exposure of worker to toxic and radioactive materials because of damage to chemical makeup tanks.
2	0/26	Double Shell Tank Filling	Exposure of worker to radioactive feed because of damage to transfer line.
3	1614774/285	LAW/HLW Melter Maintenance	Exposure of worker to radioactive material because of failure of (empty) melter.
4	1614772/143	Vitrification Product Line	Worker egress may be blocked.

6.1.5 Worker Safety-Related Events Involving Ultrahigh-Pressure Water

Ultrahigh-pressure water is used in the decontamination of the LAW and HLW glass product containers. If the ultrahigh-pressure water pipe breaks, the sudden release of energy causes pipe whip with the possibility of a worker being struck and injured. The temperature of the decontamination water is high enough to scald workers who are in the direction of the ultrahigh-pressure water discharge. Events of this type identified in the fault schedule are listed Table 6-4.

Table 6-4. Worker Safety-Related Events Involving Ultrahigh-Pressure Water

Event Number	Event Identifier	System	Consequence Description
1	1614668/120	HLW Container Decontamination	Worker injury from pipe whip or exposure to high pressure water.
2	9101/13	LAW Container Decontamination	Worker injury from pipe whip or exposure to high pressure water.

6.1.6 Collocated Worker-Safety Related Events

An incident in a shielded cell that causes an abnormal discharge from the facility stack may affect the collocated worker in a nearby facility, but because of the stack height and the meteorology, the facility worker is unaffected. Four events with this potential were identified and are presented in Table 6-5.

Table 6-5. Events of Potentially Serious or Major Consequences to the Collocated Worker

Event Number	Event Identifier	System	Consequence Description
1	1614667/153	Cs and Tc Nitric Acid Recovery	Enhanced radioactivity to the vent system from condenser failure
2	1614775/399	Cs Line	Spillage of nitric acid in-cell resulting in evolution of fumes
3	3200/193	Glass melter	Contamination spread through cell
4	2100/9	LAW Feed Evaporator	Backflow of steam to tank causing high temperature/pressure

In addition to these events, all the events that were identified as having potential for significant consequences to the public, discussed in Section 6.1.7, are assumed to have potential significant consequences to the collocated worker as well.

6.1.7 Public Safety-Related Events

Because the hazard evaluation team assigned consequence categories based on the assumption that mitigating design features were functioning during the events. Sorting the database for events with consequence categories greater than 2 revealed seventeen events of concern for public safety. There is no doubt that if the assignment of consequence categories had ignored the design features that mitigate or prevent the release, the list of events potentially hazardous to the public or environment would be longer. The list is short because the need for levels of protection of the public has been recognized, and features that provide that protection have been incorporated in the design. These features are discussed in Section 6.2.7.

The events that potentially affect the public are described in Table 6-6.

Table 6-6. Events of Potentially Serious or Major Consequences to the Public

Event Number	Event Identifier	System	Consequence Description
Loss of Confinement (Liquid Release)			
1	0/26	Double Shell Tank Filling	Seismic damage to transfer line.
2	1614664/117	Technetium Removal using Ion Exchange	Pipe or vessel rupture.
3	1614667/131	Cesium and Technetium Nitric Acid Recovery	Breach of stock tanks during seismic event.

Table 6-6. Events of Potentially Serious or Major Consequences to the Public

Event Number	Event Identifier	System	Consequence Description
Loss of Confinement (Airborne Release)			
4	0/10	Double Shell Tank Filling	Loss of HEPA filter because of HEPA filter fire.
5	1614673/288	HLW Vitrification Offgas Treatment	HEPA filter fire.
6	1614700/538	Heating, Ventilation, and Air Conditioning (HVAC)	Filter fire.
7	1614774/285	LAW/HLW Melter Maintenance	Failure of melter due to seismic event.
8	1614775/438	Cesium Line	Fire initiated by plasma welding.
9	3200/165	LAW/HLW Glass Melter	Loss of HEPA filtration because of saturation of filter by steam.
Flammable Gas Fire / Explosion			
10	1614664/117	Technetium Removal using Ion Exchange	Fire/explosion because of radiolytic hydrogen production.
11	1614673/288	HLW Vitrification Offgas Treatment	Ignition of hydrogen/ammonia in process offgas.
12	2200/12	Cesium Removal using Ion Exchange	Ignition of hydrogen evolved by radiolytic decomposition, or degradation of resin.
13	3200/192	LAW/HLW Glass Melter	Ignition of hydrogen or carbon monoxide evolved in offgas.
Loss of Confinement (liquid release)			
14	1614672/239	LAW Vitrification Offgas Treatment	Ammonium nitrate formation because of loss of process parameters (temperature control) and subsequent explosion.
15	1614687/171	LAW Vitrification Emergency Offgas System	Breach of line because of pressure caused by chemical reaction in melter.
16	3200/193	LAW/HLW Glass Melter	Failure of emergency offgas to relieve.
17	1614778/145	LAW Vitrification Line Product Handling	Use of wrong filling material.

6.2 Controls

This section discusses the controls, recorded as safeguards in the fault schedules, that were proposed by the hazard evaluation teams as preventing or mitigating the consequences of the events involving workers, collocated workers, and the public described in Section 6.1.

The events from the fault schedule that affect the facility worker tend to occur where radioactive systems interface with nonradioactive systems, or from out of cell mechanical handling operations. This is evidence of the success of the use of processes located in cells as a means of protection for the worker.

6.2.1 Safeguards for Worker Safety-Related Events Involving Contact with High-Temperature, Corrosive, Toxic, or Radioactive Materials

The approach to protecting the worker from hazardous events involving contact with high-temperature, corrosive, toxic, or radioactive materials was recorded by the team as suggested safeguards. The safeguards are discussed for each of the groupings of events listed in Table 6-1 in the following paragraphs.

Exposure to High Temperature Materials

The two events in this category involve exposure of workers to high temperature liquids. The safeguards listed are process design features to prevent worker exposure. They include facility piping design that minimizes the holdup of water by using gravity to drain the pipes of free-standing liquid, and use of interlocks and metered flow on chemical mixing systems to prevent vigorous heat-generating reactions.

Exposure to Heat and Fumes from Fire

The general safeguards identified for prevention or mitigation of the potential fire events include: minimizing amount of combustible materials in an area; providing physical fire barriers and building fire protection systems; eliminating ignition sources; and the use of non-flammable or fire resistant materials where feasible. Safeguards specific to the events listed in Table 6-1 include:

Cesium line	-	Use of a proven welding technique and proper welding practices
Waste Storage Area	-	Restricting the quantity of diesel fuel in the waste storage area, and Glass Melter – use of non-flammable glass formers.

Exposure to Toxic or Corrosive Materials

Events involving exposure to toxic and corrosive materials were initiated by liquid spills, unplanned chemical reactions and drops or spills of solid materials. Remote operations in ventilated steel-lined cells are the primary mitigating feature for worker exposure to these materials.

To mitigate or prevent liquid spills, safeguards include use of berms under vessels to control spills, high level trips and overflow protection on vessels, interlocks on feed systems, appropriate choice of materials for tanks and piping systems, and adequate maintenance and inspection systems to prevent failure from corrosion. Adequately ventilated working areas, training of workers and procedures for proper handling of hazardous materials, use of protective clothing and eyewear, and provision of safety showers and eye washes in areas where workers can contact hazardous materials mitigate the effects of both liquid and airborne solid releases. To limit exposure to the worker, glass formers are pneumatically transferred. Physical separation of chemicals that can adversely interact, interlocks on chemical delivery systems, remote operations behind physical barriers, and proper training and procedures for operators reduce the likelihood of adverse chemical reaction that can injure a worker.

Exposure to Radioactive Materials (inhalation or ingestion)

The events leading to exposure of workers to radioactive materials involved loss of confinement because of dropping contaminated components during maintenance or waste packages, loss of system pressure control, or overpressurization of packages or vessels due to radiolytic hydrogen buildup. Appropriately designed lifting gear and safe work practices are listed as safeguards for preventing drops. Safe failure modes for dampers and valves would mitigate releases from the cell on loss of ventilation control.

For the melter offgas treatment systems, the safeguard is design providing overpressure relief and standby flow paths (emergency offgas treatment system). Process monitoring systems would provide warning of pressure buildup. A potential cause of overpressure in the LAW melter offgas treatment system is formation and subsequent explosion of ammonium nitrate from a reaction of ammonia gas with NO_x at temperatures below 180 °C. Prevention of ammonium nitrate formation can be accomplished by temperature monitoring and interlock to isolate ammonia flow if the gas temperature falls below 200 °C. Radiolytic hydrogen buildup in vessels will be prevented by process design.

Exposure to Direct Radiation

The events leading to unacceptable radiation exposure to workers involved human errors that defeated adequate shielding provisions. Safeguards to prevent inadvertent exposure to high radiation fields include interlocks on shield doors, radiation monitoring of cesium canisters to prevent higher than expected loading, design of package lids to prevent releasing an improperly shielded canister, and adequate radiation control procedures and training of operators.

6.2.2 Nuclear Criticality Safeguards

Nuclear criticality safeguards are cited in the fault schedule for systems where buildup of fissile material can occur. However, there is not sufficient fissile material in the facility to present a criticality potential. The criticality requirements of the U.S. Department of Energy (DOE) tank farm contractor apply to the feed material to the RPP-WTP.

6.2.3 Occupational Safety Protection

Occupational safety events are covered by Occupational Safety and Health Administration (OSHA) requirements (29 CFR 1910) that reduce the likelihood of occurrence. The hazard evaluation process complements the OSHA requirements, especially with respect to specialized operations, e.g., power manipulators, shield doors, etc.

With regard to the resin handling operation, there are guards on the opening to the slurry tank. Both resin handling and laser cutting require training and the performance of the operation according to procedures.

6.2.4 Safeguards for Worker Safety-Related Event Involving Natural Phenomena

Design features that must be designed to withstand natural phenomena hazards will be identified by the accident analysis in the Preliminary Safety Analysis Report (PSAR).

6.2.5 Safeguards for Worker Safety-Related Event Involving Ultrahigh-Pressure Water

The ultrahigh-pressure intensifier used for decontamination of the LAW container is a sealed unit that would contain the burst of high-pressure water. Pipe whip resulting from failure of an ultrahigh-pressure line in the HLW container decontamination unit is limited by the low water transfer rate of 2 to 3 L/min (0.5 to 0.8 gal/min). Also, the HLW container decontamination system is remotely operated, eliminating the possibility of a worker being injured by contact with the hot decontamination water.

6.2.6 Safeguards for Collocated Worker Safety-Related Events

This section discusses the controls, recorded as safeguards in the fault schedules, that were proposed by the hazard evaluation teams as preventing or mitigating the consequences of the events affecting collocated worker described in Section 6.1.6.

Event 1 – Loss of cooling water to the cesium or technetium nitric acid evaporator condenser or the cooling to vessel V2710 would increase the radioactivity in the vessel vent system. More specifically, loss of cooling to vessel V2710 and the commensurate radiolytic heat generation has the potential for formation of a volatile technetium compound that would not be removed by scrubbing and filtration provided in the vessel vent system. The safeguards for this event are isolation valves that fail shut on loss of cooling water supply and would prevent the material from being released to the stack.

Event 2 – Concentrated eluate in a nitric acid solution from cesium ion exchange is spilled in the cell resulting in the evolution of nitric acid fumes in the cell. The safeguard is that the cell ventilation system contains scrubbers to prevent the release of nitric acid fumes.

Event 3 – The glass melters are equipped with an emergency offgas system that serves as a backup if the primary system should become plugged. The initiator of the event is that the emergency offgas system does not relieve or vent the melter offgasses. Without functional offgas systems, melter offgas would leak into the cell, enter the cell ventilation system, and exhaust through the cell filter and up the stack. At this preliminary stage of design, no preventative or mitigative measures have been identified.

Event 4 – The initiator of the event is the reverse flow of steam through a plant wash ejector. The normal flow of steam through the ejector creates a Bernoulli effect drawing solution through the dip leg. If the ejector discharge is blocked, the steam is discharged into and potentially pressurizes the vessel. The safeguards are that all systems are protected against overpressure and high temperatures. The wash ejectors are not often used.

6.2.7 Safeguards for Public Safety-Related Events

As previously discussed, the RPP-WTP design incorporates features that ultimately prevent or mitigate the release of hazardous materials or energy from the facility. Based on experience with similar facilities, and knowledge of the hazardous materials and energy sources involved in the process, the facility is designed to provide levels of protection from harmful releases. Design and operation to appropriate codes and standards further ensures the facility's safety.

Listed below are some examples of prudent facility design features that are intended to prevent or mitigate harmful releases to the public, as well as protecting the worker.

1) Operations involving significant quantities of hazardous materials and/or significant energy sources are performed by remote handling in robust ventilated cells.
2) Cell ventilation provides filtration and negative ventilation balance.
3) Interlocks, where needed, provide safe process shutdown when offnormal conditions are detected.

It is premature to assign design class designations to these or any of the facility's design features. Those designations are a result of the accident analysis, rather than the hazard evaluation.

The safeguards proposed by the hazard evaluation team to mitigate the events described in Section 2.1.7 are discussed in the following paragraphs.

Loss of Confinement (Liquid Release)

Two of the events having potentially significant consequences to the public from the release of liquid inventories are breach of tanks and/or transfer lines during a seismic event. Accident analysis will determine whether these releases pose a significant threat to the public. Based on the results of that analysis, vessels will have appropriate seismic design.

The rupture of a pipe or vessel during the technetium ion exchange process will be contained in the cell, and the loss of confinement will be revealed by level detection in the cell sump. The cell ventilation system will provide filtration of any airborne radionuclides. Periodic inspection programs will reduce the potential for corrosion-induced loss of confinement.

Loss of Confinement (Airborne Release)

Four of the events with potentially significant public consequences from the release of airborne radionuclides involved fires. These events postulated that the HEPA filter would be involved in the fire with subsequent loss of filter function. Prevention includes use of fire retardant materials, control of combustible loading, and restricting ignitions sources. Mitigation includes cell ventilation control.

Another event also involved loss of HEPA filtration because of saturation by steam. No specific safeguard was identified for this event.

Failure of the melter because of a seismic event during maintenance activities would be prevented by appropriate seismic design of the melter if this event is shown by accident analysis to warrant it.

Flammable Gas Fire/Explosion

Events postulating flammable gas accumulation address radiolytic hydrogen production in ion exchange, and hydrogen, ammonia and carbon monoxide in process offgas systems. Safeguards include design of ion exchange vessel vent systems to prevent hydrogen accumulation to the LFL without credit for active ventilation. Temperature control and restriction of ignition sources are suggested for the process offgas systems.

Overpressure/Explosion

Breach of confinement systems because of high pressure or explosion was postulated for four events. There is a potential for formation of ammonium nitrate, and explosive compound, in the LAW vitrification offgas treatment system at gas temperatures below 180 °C. Prevention of ammonium nitrate formation can be accomplished by temperature monitoring and interlock to isolate ammonia flow if the gas temperature falls below 200 °C. In the melter offgas systems, alternate flowpaths are provided to handle overpressure, and dampers and valves with safe failure modes will be considered in the design.

7.0 Items Requiring Future Study; Action Items

Actions

During study meetings, actions were given to team members to supplement study details. Actions were 4 types:

- Request for additional information. Insufficient information was available at the meeting on particular points, information to aid further study was requested.
- Proposal for design change. Conclusions from the study team required consideration of changes to the design. With the level of design detail available at this stage of the project, such actions illustrate the evolution of safety within the design process.
- Request for further work/additional design detail. These actions result from uncertainties and are a logical consequence of the current level of design detail.
- A "flag" to ensure issues/concerns raised by the study team were carried forward into the developing design process; e.g., the need for specific procedures, interface control issues, etc.

All actions raised were reviewed by the study team and were, cleared or left open, to be carried over for consideration and further review early in Part B. A listing is included of all actions raised with their associated content and status in the project files.

Design Status

The level of design detail reflected in this Hazards Analysis Report is that of a concept design. Details of the facility and process are available in terms of inventories, major process equipment, layout and process steps. Such details are reflected in Process Flow Diagrams (PFDs) which formed the source documents for the PHA studies. Many of the open actions reflect the need for additional design detail before further consideration and hazard study can be undertaken. For example, detailed information on vessel instrumentation is not yet available, and so protection systems involving instrumentation cannot be specified. As indicated above, early Part B activities will include a review of open actions which will become part of the information requirements for the more detailed hazard study exercise that will be part of the developing design process. This exercise will be similar to the HAZOP studies as defined in the AIChE guidelines (1992).

Uncertainties

A number of actions were raised to address uncertainties in the current level of design. They were raised to ensure that they would be addressed during the design process in Part B. Although additional information was requested to ensure uncertainties are resolved, during this study conservative assumptions were made to address them. For example, uncertainties relating to the fissile content of a waste stream were addressed by assuming a credible maximum figure and applying conservative calculations to determine the potential for a criticality event.

This page intentionally left blank.

8.0 Management Response to Hazard Evaluation Study Issues

The Occupational Safety and Health Administration's (OSHA) Process Safety Management (PSM) Standard (29 CFR 1910.119) requires that management formally document their response to the results of the hazard evaluation study. The management response to the Tank Waste Remediation System-Privatization (TWRS-P) hazard evaluation study is found in Appendix D.

This page intentionally left blank.

9.0 References

10 CFR 61.55, "Waste Classification", *Code of Federal Regulations*, as amended.

10 CFR 70, "Domestic Licensing of Special Nuclear Material", *Code of Federal Regulations*, as amended, and proposed revision, April 3, 1995.

10 CFR 72, "Licensing Requirements for the Independent Storage of Spent Nuclear Fuel and High-Level Radioactive Waste", *Code of Federal Regulations*, as amended.

10 CFR 100, "Reactor Site Criteria", *Code of Federal Regulations*, as amended.

29 CFR 1910, "Occupational Safety and Health Standards", *Code of Federal Regulations*, as amended.

40 CFR 68, "Chemical Accident Prevention Provisions", *Code of Federal Regulations*, as amended.

40 CFR 261, "Identification and Listing of Hazardous Wastes", *Code of Federal Regulations*, as amended.

AIChE 1992, *Guidelines for Hazard Evaluation Procedures, Second Edition with Worked Examples*, Center for Chemical Process Safety, American Institute of Chemical Engineers, New York, New York.

API, 1990, *American Petroleum Institute Recommended Practice 750, Management of Process Hazards*, 1st ed., Washington, DC, 1990.

ASCE, 1995, *Minimum Design Loads for Building and Other Structures*, ASCE 7-95, American Society of Civil Engineers, New York, New York.

Beary, M, *Probabilistic Risk Analysis Tornado Missile Hazard to Cold Vacuum Drying System and Hot Conditioning System*, 1996, Revised September 1996, Science Applications International Corporation, Richland, Washington.

Bretherick, L. 1990, *Bretherick's Handbook of Reactive Chemical Hazards*, Fourth Edition, Butterworth & Company, London.

Burlington 1992, *Environmental Assessment fielding of IPM1 on a M2A1/M3A1 Fighting vehicles at Fort Lewis and Yakima Training Center by the Washington Army National Guard*. Burlington Environmental, Inc., Seattle, Washington.

CMA, 1990, *Resource Guide for the Process Safety Code of Management Practices*, Chemical Manufacturers Association, Washington DC., 1990.

Cushing, C. E., 1995, *Hanford Site National Environmental Policy Act (NEPA) Characterization*, PNL-6415, Rev. 7, Pacific Northwest Laboratory, Richland, Washington.

Delaney, C. D., K. A. Lindsey, and S. P. Reidel, 1991, *Geology and Hydrology of the Hanford Site: A Standardized Text for Use in Westinghouse Hanford Company Documents and Reports*, WHC-SD-ER-TI-003, Rev. 0, Westinghouse Hanford Company, Richland, Washington.

DOA, 1979, *Final Environmental Impact Statement-Ft. Lewis Military Installation*, U.S. Department of Army, Headquarters, 9th Infantry Division and Ft. Lewis, with URS Company, Seattle, Washington.

DOE, 1994a, *Natural Phenomena Hazards Design and Evaluation Criteria for Department of Energy Facilities*, DOE-STD-1020-94, U.S. Department of Energy, Washington, D.C.

DOE 1994b, *Preparation Guide for U.S. Department of Energy Nonreactor Nuclear Facility Safety Analysis* Reports, DOE-STD-3009-94, U.S. Department of Energy, Washington D.C.

DOE, 1996, *Accident Analysis for Aircraft Crash into Hazardous Facilities*, DOE-STD-3014-96, U.S. Department of Energy, Washington D.C.

DOE-RL 1996a, *Management of Spent Nuclear Fuel from the K Basins at the Hanford Site, Richland, Washington*, DOE/EIS-0245F, U.S. Department of Energy, Richland Operations Office, Richland, Washington.

DOE-RL 1996b, *TWRS Privatization*, DOE Contract DE-AC06-RL-12208, U.S. Department of Energy, Richland Operations Office, Richland, Washington.

ERDA, 1976, *Evaluation of Impact of Potential Flooding Criteria on the Hanford Project*, RLO-76-4, U.S. Energy Research and Development Administration, Washington, D.C.

Garvin, L. J., 1997, *Canister Storage Building Safety Analysis Report – Phase 3: Safety Analysis Documentation Supporting Canister Storage Building Construction*, HNF-SD-SNF-RPT-004, Revision 7A, Fluor Daniel Hanford, Inc. Richland Washington.

Geomatrix, 1996, *Probabilistic Seismic Hazard Analysis, DOE Hanford Site Washington*, WHC-SD-W236-TI-002, Rev. 1, prepared by Geomatrix Consultants, Incorporated, San Francisco, California, for Westinghouse Hanford Company, Richland, Washington.

Giller, R.A., 1992, *Bibliography and Summary of Geotechnical Studies at the Hanford Site*, WHC-SD-EN-ER-3009, Westinghouse Hanford Company, Richland, Washington.

GTS Duratek, 1997a, *TWRS Privatization GTS Duratek Melter Systems Process Design Freeze Package.*

GTS Duratek, 1997b, *TWRS Privatization Project, HLW Melter System 50 Percent Conceptual Design Report*, Rev. 0.

Hoblitt, R. P., R. D. Miller, and W. E. Scott, 1987, *Volcanic Hazards with Regards to Siting Nuclear-Power Plants in the Pacific Northwest*, Open File Report 87-297, U.S. Geological Survey, Cascades Volcano Observatory, Vancouver, Washington.

Hosler, A. G., 1996, *Contact with Local Organizations to Support CSB SAR Chapter 1* (Memo 042AGH.96 to Canister Storage Building, Safety Analysis Report File, May 6), Science Applications International Corporation, Richland, Washington.

HU, 1997, *Calculations of Hydrogen Release Rate at Steady State for Double-Shell Tanks*, Lockheed Martin Hanford Company, Richland, Washington.

ICBO, 1994, *Uniform Building Code*, International Conference of Building Officials, Whittier, California.

Lewis, 1992, *Sax's Dangerous Properties of Industrial Materials*, Eighth Edition, Volume III, Van Nostrand Reinhold, New York, New York.

NFPA, 1975, *Fire Protection Guide on Hazardous Materials*, Sixth Edition, National Fire Protection Association, Boston, Massachusetts.

NRC 1995, *Standard Review Plan for the Review of a License Application for a Fuel Cycle Facility*, draft, NUREG-1520, Rev. 2, U. S. Nuclear Regulatory Commission, Washington D.C.

NRC 1994, *Integrated Safety Analysis Guidance Document*, NUREG-1513, draft, distributed August 8, 1994, U. S. Nuclear Regulatory Commission, Washington D.C.

NRC, 1978, *Evaluations of Explosions Postulated to Occur on Transportation Routes Near Nuclear Power Plants*, Regulatory Guide 1.91, Rev. 1, U.S. Nuclear Regulatory Commission, Washington, D.C.

NRC, 1974a, *Assumptions for Evaluating the Habitability of a Nuclear Power Plant Control Room During a Postulated Hazardous Chemical Release*, Regulatory Guide 1.78, U.S. Nuclear Regulatory Commission, Washington, D.C.

NRC, 1974b, *Assumptions Used for Evaluating the Potential Radiological Consequences of a Loss of Coolant Accident for Boiling Water Reactors*, Regulatory Guide 1.3, U.S. Nuclear Regulatory Commission, Washington, D.C.

Perry and Chilton, 1973, *Chemical Engineers Handbook*, Fifth Edition, McGraw-Hill Book Company, New York, New York.

Power, M. S., K. J. Coppersmith, R. R. Youngs, D. P. Schwartz, and F. H. Swan III, 1981, *Amendment No. 18, Final Safety Analysis Report WNP-2*, Appendix 2.5K, "Seismic Exposure for the WNP-2 and WNP-1/4 Site", Washington Public Power Supply System, Richland, Washington.

Salmon, M., 1996, Volcanic Ashfall Loads for the Hanford Site, WHC-SD-GN-ER-30038, Rev. 0, Westinghouse Hanford Company, Richland, Washington.

Scott, W. B., 1995a, *Clarification of Hanford Site Boundaries for Current and Future Use in Safety Analyses* (Letter 9504327 to Director, Pacific Northwest Laboratory, and President, Westinghouse Hanford Company, September 23), U.S. Department of Energy, Richland Operations Office, Richland, Washington.

Scott, W. E., R. M. Iverson, J. W. Vallance, and W. Hildreth, 1995b, *Volcanic Hazards in the Mount Adams Region*, Washington, Open File Report 95-492, U.S. Geological Survey, Washington, D.C.

Skaggs, R. L., and W. H. Walters, 1981, *Flood Risk Analysis of Cold Creek Near the Hanford Site*, RHO-BWI-C-120, Rockwell Hanford Operations, Richland, Washington.

Stone, W. A., J. M. Thorp, O.P. Gifford, and D. J. Hoitink, 1983, *Climatological Summary for the Hanford Area*, PNL-4622, Pacific Northwest Laboratory, Richland, Washington.

Supply System, 1995, *Final Safety Analysis Report, Washington Nuclear Power Plant No. 2*, Amendment 50, Docket No. 50-397, Washington Public Power Supply System, Richland, Washington.

WCC, 1989, *Evaluation of Seismic Hazard for Nonreactor Facilities, Hanford Reservation, Hanford Washington*, WHC-MR-0023, prepared by Woodward-Clyde Consultants, Oakland, California, for Westinghouse Hanford Company, Richland, Washington.

WHC, 1997, *Tank Waste Remediation System Basis for Interim Operation*, HNF-SD-WM-B10-001 Rev. 0, Richland, Washington.

WSRC 1994, *Defense Waste Processing Facility Preliminary Hazard Analysis*, WSRC-TR-94-0586, Westinghouse Savannah River Company, Aiken, South Carolina.

WVNS 1995, *Safety Analysis Report for Vitrification System Operations and High-Level Waste Interim Storage*, WVNS-SAR-003, Rev. 3, West Valley Nuclear Services Company Inc. West Valley, New York.

Appendix A

Maintenance Fault Schedules

This page intentionally left blank.

Fault Schedule: Maintenance Concerns

(Sheet 1)

System: LAW Feed Receipt

Study Area/Keyword DST Vessel - Ventilation - Control System Failure, Maintenance Operations Hazard

Event Identifier	Initiating Event	Safeguards	Frequency	Hazard Consequence	Worker Consequence	Public Consequence
0/60	1. Ventilation shuts down. 2. Maintenance operations - may need to change the inlet filters due to dust accumulation - no redundancy on inlet filters.	1. Ventilation system shuts down on low liquor level to prevent tank rupture. 2. Area (pump pit) radiation monitoring. 3. Area not normally man accessed. 4. Adequately sensitive level monmitoring equipment in the tank. 5. Filter train can be isolated for change.	3	1. Loss of air flow into the tank through penetrations. 2. Potential for activity migration back through the penetrations. 3. Isolation of filter train may produce additional vacuum challenge.	2	1

System: LAW Feed Receipt

Study Area/Keyword Filling DST - Maintainability Hazard

Event Identifier	Initiating Event	Safeguards	Frequency	Hazard Consequence	Worker Consequence	Public Consequence
0/14	1. Maintenance activities	1. Pump motors and actuators are above the shielding and can be removed without disturbing the shielding. 2. Pit is epoxy lined. 3. Wash ring and hose station. 4. Maintenance Procedures	4	1. Contamination in the pit due to maintenance operations.	1	1

Fault Schedule: Maintenance Concerns

(Sheet 2)

System: LAW Feed Receipt

Study Area/Keyword Transfer from DST to Facility - Maintainability Hazard

Event Identifier	Initiating Event	Safeguards	Frequency	Hazard Consequence	Worker Consequence	Public Consequence
0/41	1. Solids deposition.	1. Routine flushing of transfer line after transfer. 2. Maintenance of the secondary containment leak detection (annulus).	4	1. Line blockage.	1	1

System: Entrained Solids Removal

Study Area/Keyword Maintainability Hazard

Event Identifier	Initiating Event	Safeguards	Frequency	Hazard Consequence	Worker Consequence	Public Consequence
1/43	1. Active ultrafilter loop lost - maintenance required. 2. Maintenance of heat exchanger E1101. 3. Ultrafiltration stops - solids carry-over to vessel T1103. 4. Blocked transfer line to DST.	1. Standby ultrafilter set available. 2. Transfer line is flushed after each transfer operation. 3. Ultrafilter tubes are replaceable. 4. Heat exchanger to be made as maintenance free as possible.	4	1. Potential for dose uptake during maintenance operations.	1	1

Fault Schedule: Maintenance Concerns

(Sheet 3)

System: LAW Melter Feed Evaporator

Study Area/Keyword Maintainability Hazard

Event Identifier	Initiating Event	Safeguards	Frequency	Hazard Consequence	Worker Consequence	Public Consequence
1614661/124	1. Chronic plate out. (see external/internal dose. Pumps, steam traps, monitors are examples of mantainable items within this plant area).	1. Standby pumps to be provided where appropriate. 2. Bulges provided for mantainable items in active areas for accessability. 3. Plate out and dose uptake calculations are being performed. 4. Maintenance procedures. 5. Block & bleed isolation of valves for maintenance.	4	1. Potential for dose uptake during maintenance operations.	1	1

System: Tc Removal using Ion Exchange

Study Area/Keyword Maintainability Hazard

Event Identifier	Initiating Event	Safeguards	Frequency	Hazard Consequence	Worker Consequence	Public Consequence
1614664/122	1. Tc is highly toxic. 2. Radiation / contamination levels likely to be high.	1. Extra resin capacity is built in to cope with a potential failure. 2. Operation with 3 out of 4 columns is possible. 3. Non-removal of Tc is not as significant as Cs.4. There will be minimal maintenance in this area.	4	1. Potential for dose uptake during maintenance operations.	1	1

Fault Schedule: Maintenance Concerns

(Sheet 4)

System: Condensate/Plant Wash And Drain Systems

Study Area/Keyword Maintainability Hazard

Event Identifier	Initiating Event	Safeguards	Frequency	Hazard Consequence	Worker Consequence	Public Consequence
1614665/135	1. Equipment requiring maintenance : Pumps, valves.	1. Pumps and valves located out-cell in bulges. 2. Wash facilities provide to enable hands-on maintenance.	4	1. Potential for dose uptake during maintenance operations.	1	1

System: HLW Melter Feed Receipt And Pretreatment

Study Area/Keyword Maintainability Hazard

Event Identifier	Initiating Event	Safeguards	Frequency	Hazard Consequence	Worker Consequence	Public Consequence
1614666/125	1. Maintenance of diversion valve which will be located within bulge.	1. Access provided for all maintainable equipment.	4	1. Potential for dose uptake during maintenance operations.	1	1

Fault Schedule: Maintenance Concerns

(Sheet 5)

System: HLW Container Decontamination

Study Area/Keyword Maintainability Hazard

Event Identifier	Initiating Event	Safeguards	Frequency	Hazard Consequence	Worker Consequence	Public Consequence
1614668/122	1. Man access to area required for maintenance.	1. Provision of suitable monitors is necesary due to the requirements on man access. 2. Vacuuming system provided for decontamination during maintenance purposes. Vacuum discharge cycled to a waste drum.	4	1. Potential for dose uptake during maintenance operations.	1	1

System: Cs / Tc Fresh Resin Addition and Removal

Study Area/Keyword Maintainability Hazard

Event Identifier	Initiating Event	Safeguards	Frequency	Hazard Consequence	Worker Consequence	Public Consequence
1614669/161	1. Valve maintenance (containment lost during maintenance).	1. Most maintenance activities are outcell (i.e. low / non-active).	4	1. Potential for dose uptake during maintenance operations.	1	1

Fault Schedule: Maintenance Concerns

(Sheet 6)

System: **Secondary Off-Gas Treatment**

Study Area/Keyword Maintainability Hazard

Event Identifier	Initiating Event	Safeguards	Frequency	Hazard Consequence	Worker Consequence	Public Consequence
1614671/342	1. Maintenance of Electric Heater E3601. (Note : This heater element must be bypassed during maintenance because system must be continuously available).	1. Heater is outcell. 2. Electric elements can be changed without breaking containment.1. The wet scrubbers are essentially maintenance free. 2. The HEMEs are on a duty / standby arrangement.	4	1. Conventional hazard (electrical) to Maintainers.	1	1

Fault Schedule: Maintenance Concerns

(Sheet 7)

System: LAW Vitrification Off-Gas Treatment

Study Area/Keyword Maintainability Hazard

Event Identifier	Initiating Event	Safeguards	Frequency	Hazard Consequence	Worker Consequence	Public Consequence
1614672/215	1. Valve maintenance.	1. Butterfly valve on controller located in bulge or cabinet.	4	1. Potential for dose uptake during maintenance operations.	1	1
1614672/242	1. Heat exchangers requiring maintenance - build-up of contaminant (ammonium bisulphide). 2. Maintenance of ventilation extract fans. 3. Changeover of scrubber packing. (Note : This system must be continuously available).	1. Flushing of heat exchangers to remove solidified ammonium bisulphide. 2. Standby pumps and fans provided. 3. Oil burner maintenance carried out when melter feeds are isolated and NOX production is minimal.	4	1. Heat exchangers can be blocked with Ammonium Bisulphite if HEMEs do not work efficiently.	1	1

System: HLW Vitrification Off-Gas Treatment

Study Area/Keyword Maintainability Hazard

Event Identifier	Initiating Event	Safeguards	Frequency	Hazard Consequence	Worker Consequence	Public Consequence
1614673/291	1. Cartridge replacement. 2. Solid waste disposal.	1. There is a solid waste disposal route (minimisation of volumes; crushing). 2. Change out of cartridges should be within a cave, as is HEPA filter change.	4	1. Increased dose uptake to plant maintainers. 2. Disposal route available for solid waste - only limited consequence potential.	1	1

Fault Schedule: Maintenance Concerns

(Sheet 8)

System: **Outcell Process Reagents**

Study Area/Keyword Maintainability Hazard

Event Identifier	Initiating Event	Safeguards	Frequency	Hazard Consequence	Worker Consequence	Public Consequence
1614673/317	1. Fans K4301 are hands-on maintained. 2. Continuous operation of the melter is necessary.	1. Scrubber is essentially maintenance free. 2. Condenser has a number of redundant tubes.	4	1. Potential for dose uptake during maintenance operations.	1	1
1614683/136	1. System contains replaceable items: canisters and wah rings. 2. Area has to be well ventilated during maintenance.	1. Pumps require relatively little maintenance. 2. Pump (remote) handling equipment is available to ease maintenance of these items. 3. Pump motors are external and therefore require less complex maintenance procedures. 4. PPE may be required. 5. Pumps are washed-out prior to maintenance.	4	1. Potential for dose uptake during maintenance operations.	1	1

Fault Schedule: Maintenance Concerns

(Sheet 9)

System: LAW Vitrification Emergency Off-Gas System

Study Area/Keyword Maintainability Hazard

Event Identifier	Initiating Event	Safeguards	Frequency	Hazard Consequence	Worker Consequence	Public Consequence
1614687/173	1. Maintenance of dampers. 2. Blockage of fluidic equipment.	1. Maintenance of dampers performed by manipulators 2. VXAs are not prone to blockage.	4	1. Potential for dose uptake during maintenance operations.	1	1

System: HVAC

Study Area/Keyword Maintainability Hazard

Event Identifier	Initiating Event	Safeguards	Frequency	Hazard Consequence	Worker Consequence	Public Consequence
1614700/514	1. Filter crushing machine requiring maintenance (see entry 1614700/536). 2. Other equipment including fans, filters, instrumentation and chillers requiring maintenance. 3. Motor maintenance.	1. Chillers located outcell with hands-on access possible. 2. Duty and standby fans permit full system availability. 3. Simple damper design - requiring little maintenance. 4. Instrumentation is piped out of cell.	4	1. Motor may be located in cave - maintenance operation may be difficult.	1	1

Fault Schedule: Maintenance Concerns

(Sheet 10)

System: LAW Vitrification Line Product Handling

Study Area/Keyword Maintainability Hazard

Event Identifier	Initiating Event	Safeguards	Frequency	Hazard Consequence	Worker Consequence	Public Consequence
1614772/220	1. Accessibility. 2. Crane maintenance. 3. Recovery operations. 4. Bogie maintenance.	1. Provision for man access to carry out maintenance. 2. Store crane is retreivable to a shielded area for maintenance. 3. Provision willl made to manually delatch container from failed grapple. 4. The main pour cell bogies has its own decom. maintenance area. 5. Other plant items designed to remotely be removable and replaceable.	4	1. Difficulties encountered during maintenance. 2. Potential for increased dose uptake to workers.	1	1

System: LAW/HLW Melter Maintenance

Study Area/Keyword Maintainability Hazard

Event Identifier	Initiating Event	Safeguards	Frequency	Hazard Consequence	Worker Consequence	Public Consequence
1614774/277	1. Bogie maintenance.	1. Bogies have decontamination and maintenance areas at both ends of the cell.	4	1. None identified at this time.	1	1

Fault Schedule: Maintenance Concerns

(Sheet 11)

System: Cs Line

Study Area/Keyword Maintainability Hazard

Event Identifier	Initiating Event	Safeguards	Frequency	Hazard Consequence	Worker Consequence	Public Consequence
1614775/393		1. Remote in-cell maintenance. 2. There wil be a route to post welding heads and swabs, both in and out. 3. If cell is clean, maintenance via man access remains possible. 4. Bogie withdrawn to maintenace area. 5. Hatch maintained in handling cave.	4	1. None identified at this time.	1	1

System: LAW/HLW Solid Waste Handling

Study Area/Keyword Maintainability Hazard

Event Identifier	Initiating Event	Safeguards	Frequency	Hazard Consequence	Worker Consequence	Public Consequence
1614778/332	1. Maintenance operations themselves.	1. Cranes and manipulators have manual recovery. 2. Crane and power manipulators served by dedicated facilities. MSMs to be decontaminated and transferred to dedicated facility. 3. Removal and replacment route for tools via crane. 4. Lid handling, container lifting and breakdown mechanisms driven via through wall drives.	4	1. None identified at this time.	1	1

Fault Schedule: Maintenance Concerns

(Sheet 12)

System: **LAW Feed Receipt Evaporator**

Study Area/Keyword Maintainability Hazard

Event Identifier	Initiating Event	Safeguards	Frequency	Hazard Consequence	Worker Consequence	Public Consequence
2100/11	1. Incorrect maintenance of pumps. 2. Incorrect maintenance procedures undertaken. 3. Maintenance of evaporator - difficult in-cell operation. Removal and replacement unlikely.	1. Appropriate protective clothing (e.g. Gloves, respirators, etc.,). 2. Capping of tube bundle within a condenser. 3. About 25% extra tubes are provided to cater with tube failures. 4. Dose uptake provision. 5. Personal Protective Equipment. 6. Maintenance procedures. 7. Procedures will require monitoring of the area. 8. Leaking tubes can be plugged under a special maintenance operation. 9. Steam ejectors are in a bulge to permit replacement in the event of becoming inoperative due to erosion.	4	1. Radiation / contamination during maintenance of pumps and heat exchanger.	1	1

Fault Schedule: Maintenance Concerns

(Sheet 13)

System: **Cs Removal using Ion Exchange**

Study Area/Keyword Maintainability Hazard

Event Identifier	Initiating Event	Safeguards	Frequency	Hazard Consequence	Worker Consequence	Public Consequence
2200/15	1. Maintenance is difficult due to in-cell operation.	1. Column incorporates extra ullage space for resin in event of failure of filling system. 2. Caustic tank located in cell as liquor is potentially contaminated. 3. DMW pump outside cell with double isolation. 4. Options for valves and instrumentation include location in shielded bulges or remote caves. 5. If a column is lost, plant operation may continue with fewer columns.	4	1. Potential for dose uptake during maintenance operations.	1	1

Fault Schedule: Maintenance Concerns

(Sheet 14)

System: **LAW/HLW Glass Melter**

Study Area/Keyword HA Glass Melter System - Maintainability Hazard

Event Identifier	Initiating Event	Safeguards	Frequency	Hazard Consequence	Worker Consequence	Public Consequence
3200/251	1. Short-circuits during maintenance. 2. Blockage of feed pipes and nozzles (due to lower flow - still an issue with LA Melter). 3. Removal / adjustment of discharge risers. 4. Bubbler replacement / associated operations. 5. Bridging (seal) across spout to container - due to low glass temperature. 6. Frozen glass in forehalf of riser. 7. Very difficult to recover from riser blockage following glass foaming. 8. Cannot rod out glass. 9. Some component lifetimes are expected to be shorter than in LA Melter, particularly those with a low tolerance to radiation.	1. Discharge can be rodded through using a manipulator. 2. Spout can be removed and disposed of. 3.Redundancy in glass discharge routes. 4. CCTV in-cell.	4	1. Glass dropped on the floor. 2. Outlet blocked.	1	1

Fault Schedule: Maintenance Concerns

(Sheet 15)

System: **LAW/HLW Glass Melter**

Study Area/Keyword HA Melter Feed Tanks System - Maintainability Hazard

Event Identifier	Initiating Event	Safeguards	Frequency	Hazard Consequence	Worker Consequence	Public Consequence
3200/225	1. Replacement of stirers and motors.	1. Motors may be out-cell, though this will require a long driveshaft. 2. An appropriate level of decontamination may be applied if possible, alowing for LAW disposal otherwise, direct disposal as high level waste.	4	1. Potential for increased dose uptake to plant maintainers.	2	1

Fault Schedule: Maintenance Concerns

(Sheet 16)

System: **LAW/HLW Glass Melter**

Study Area/Keyword Maintainability Hazard

Event Identifier	Initiating Event	Safeguards	Frequency	Hazard Consequence	Worker Consequence	Public Consequence
3200/143	1. Replacement of stirers and motors.	1. Motors may be out-cell, though this will require a long driveshaft.	4	1. Potential for dose uptake during maintenance operations.	1	1
3200/169	1. Short-circuits during maintenance. 2. Bubbler replacement / associated operations. 3. Bridging (seal) across spout to container - due to low glass temperature. 4. Frozen glass in forehalf of riser.	1. Discharge can be rodded through using a manipulator. 2. Spout can be removed and disposed of. 3. Redundancy of glass discharge routes. 4. CCTV in-cell.	4	1. Glass dropped on the floor. 2. Outlet blocked. 3. Potential for dose uptake during maintenance operations.	1	1

Fault Schedule: Maintenance Concerns

(Sheet 17)

System: LAW/HLW Glass Melter

Study Area/Keyword nactive Glass Former Feed System - Maintainability Hazard

Event Identifier	Initiating Event	Safeguards	Frequency	Hazard Consequence	Worker Consequence	Public Consequence
3200/119	1. Exposure to toxic feed materials.	1. Maintenance procedures, safe working practices, as applicable in industry as a whole. 2. Hands-on maintenance possible. These may need the same treatment as suspect active systems. Propiretary systems.	4	1. Plant maintainer may become contaminated.	3	1

System: LAW/HLW Glass Melter

Study Area/Keyword Off-Gas System - Ventilation - Maintenance Hazard

Event Identifier	Initiating Event	Safeguards	Frequency	Hazard Consequence	Worker Consequence	Public Consequence
3200/191	1. Maintenance activities.	1. Melter would be at a lower depression than cell. 2. System would continue to operate in the event of an off-gas system failure.	4	1. Potential for contamination spread. Potential for increased dose uptake to Maintainers.	1	1
3200/196	1. Nozzles, pumps, reamer and quencher body requiring maintenance.	1. All items requiring maintenance will be segregated.	4	1. Potential for dose uptake during maintenance operations.	1	1

This page intentionally left blank.

Appendix B

Operability Fault Schedules

This page intentionally left blank.

Fault Schedule: Operability Concerns

(Sheet 1)

System: LAW Feed Receipt

Study Area/Keyword Filling DST - Operability Problem

Event Identifier	Initiating Event	Safeguards	Frequency	Hazard Consequence	Worker Consequence	Public Consequence
0/13	1. Unable to open pit during high wind (procedural inhibition). 2. Removal of pump pit roof for maintenance activities.	1. Valving sequences for ventilation, liquor filling etc are important to minimise operability problems.	3	1. Operability problem - negligible operator or public consequence.	1	1

System: LAW Feed Receipt

Study Area/Keyword Transfer from DST to Facility - Operability Problem

Event Identifier	Initiating Event	Safeguards	Frequency	Hazard Consequence	Worker Consequence	Public Consequence
0/40	1. Difficulties in achieving adequate rates of transfer.	1. Size of pump to ensure adequate transfer conditions and pressure requirements.	3	1. Operability problem - negligible operator consequence.	1	1

Fault Schedule: Operability Concerns

(Sheet 2)

System: **Entrained Solids Removal**

Study Area/Keyword Operability Problem

Event Identifier	Initiating Event	Safeguards	Frequency	Hazard Consequence	Worker Consequence	Public Consequence
1/12	1. Loss of agitation - solids settling in tank. 2. Loss of optimal precipitation conditions: 3. Failure to correctly condition liquor for correct physical / chemical transfer conditions. 4. High alkaline molarity may lead to problem in conditioning the material, before feed forward. 5. Incorrect conditioning. 6. Excess backwash liquors. 7. Overconcentration of solids due to excessive ultrafiltration - potential for corrosion / erosion of transfer line. 8. Out of specification material. (Refer to external dose.)	1. Reliability of agitation system. 2. Control in V1102 is via level and SG measurement. 3. Slurry is sampled. 4. Corrosion is inhibited by addition of Nitrite / Hydroxide. 5. Control of reagent addition assures against throughput problems. 6. Optimum ultrafilter pore size of 0.1um. 7. An appropriate level of alkalinity can be set in V1101. 8. DoE tank is carbon steel. 9. Conditioning steps are placed in operating sequence in order to reduce corrosion / erosion. 10. Downstream processes, including sampling and recycling aids recovery. 11. Material alkalinity is known before transfer to V1101.	3	1. Reduction in usable tank volume. 2. Potential for over precipitation if excess of free hydroxide present. 3. Failure to meet product specification following incorrect conditioning. 4. Pumping of overconcentrated solids may be difficult.	1	1

Fault Schedule: Operability Concerns

(Sheet 3)

System: **LAW Melter Feed Evaporator**

Study Area/Keyword Operability Problem

Event Identifier	Initiating Event	Safeguards	Frequency	Hazard Consequence	Worker Consequence	Public Consequence
1614661/123	1. Overconcentration of feeds. 2. Crystalisation in situ. 3. Loss of steam. 4. Pump cavitation. 5. Transfer to wrong tank.	1. Density monitor - indication of overconcentration. 2. Low level indication /alarm potential for overconcentration highlighted early. 3. Sequence control. Indication of tank filling. 4. Robust recirculation and reboiler system. 5. Can operate over a wide range of liquor densities. 6. Temperature indication on the collection vessels (high temperature could indicate steam breakthrough). 7. Bulk evaporated material (inventory) does not change significantly - significant change only after a long period of evaporator maloperation or start up / shut down.8. Ability to control concentration (Addition of water to overconcentrated material). 9. Wash system/incoming feed could be used to dilute and redissolve. 10. Recovery routes are available.	3	1. Out of specification material (See domino on plant area 1).	1	1

Fault Schedule: Operability Concerns

(Sheet 4)

System: Cs Recovery as a Solid

Study Area/Keyword Operability Problem

Event Identifier	Initiating Event	Safeguards	Frequency	Hazard Consequence	Worker Consequence	Public Consequence
1614662/122	1. Addition of wrong amount of caustic	1. Temperature monitoring of tank. 2. Check of CST's before loading.	3	1. Potential for Process to be halted ? 2. No operator consequence ?	1	1

System: Tc Removal using Ion Exchange

Study Area/Keyword Operability Problem

Event Identifier	Initiating Event	Safeguards	Frequency	Hazard Consequence	Worker Consequence	Public Consequence
1614664/121	1. Incorrect concentration of feed.	1. Nitric acid is fed at correct concentration (Tc Ion Exchange columns will be at rest for longer c.f. Cs columns. See Operability Guideword in Cs removal HE study).	3	1. Process upset ?	1	1

Fault Schedule: Operability Concerns

(Sheet 5)

System: Condensate/Plant Wash And Drain Systems

Study Area/Keyword Operability Problem

Event Identifier	Initiating Event	Safeguards	Frequency	Hazard Consequence	Worker Consequence	Public Consequence
1614665/134	1. Misrouting of feeds (see internal and external dose). 2. Overfilling of vessels. 3. Incorrect adjustment of pH in V9302.	1. Level detection should prevent overfilling of vessels for controlled flows. 2. Vessel vent system will collect volatile radioactive iodine and remove it to secondary off-gas system.	3	1. Acid fed forward into V9308 - potential reaction with alkali feeds leading to radioactive iodine release in V9308.	2	2

System: HLW Melter Feed Receipt And Pretreatment

Study Area/Keyword Operability Problem

Event Identifier	Initiating Event	Safeguards	Frequency	Hazard Consequence	Worker Consequence	Public Consequence
1614666/124	1. Transfer of slurries. 2. Optimisation of cooling.	1. Transfer process designed for handling slurries therefore blockages minimised. 2. Optimisation of cooling may be required. eg heat exchanger duty might be repaced by cooling coils on V4102. 3. Operation considered straight-forward providing suitable protocols are in place.	4	1. Potential for inefficient transfer or process delay.	1	1

Fault Schedule: Operability Concerns

(Sheet 6)

System: Cs And Tc Nitric Acid Recovery

Study Area/Keyword Operability Problem

Event Identifier	Initiating Event	Safeguards	Frequency	Hazard Consequence	Worker Consequence	Public Consequence
1614667/121	1. Process upset - incorrect acid concentration to process (Tc or Cs loaded). 2. Acid added at wrong time i.e. when evaporator contains liquor. 3. Liquor overflows from evaporator. 4. Frequent unscheduled start up and shut down causes process problems	1. Recovery routes are available. 2. Known batches of acid and water added. 3. Density measurement of liquor on tank.	3	1. High conc. tanks 2304 A/B and 2704 A/B diluted with water. Potential for release from cell. 2. Low concentration to eluant tank causes process delay. Potential for release from cell.	2	2

Fault Schedule: Operability Concerns

(Sheet 7)

System: **HLW Container Decontamination**

Study Area/Keyword Operability Problem

Event Identifier	Initiating Event	Safeguards	Frequency	Hazard Consequence	Worker Consequence	Public Consequence
1614668/121	1. Poor visibility due to loss of ventilation system. 2. Man access required for replacement of water jet nozzels (restricted life). 3. Access frequency a function of water quality and nozzle quality. 3. Poor water quality. 4. Bottleneck at decontamination plant likely to be a problem.	1. Reverse osmosis unit to improve water quality. 2. Appropriate quality / grade of nozzels. 3. Posting in facility for maintenance. 4. There will be a test rig provided prior to commissioning. 5. Possible duplicate decontamination facility to relieve bottleneck.Continual process vigilance must be maintained, e.g. to detect problems on jetting.	1	1. Potential hazard to worker during maintenance.	1	1

Fault Schedule: Operability Concerns

(Sheet 8)

System: **Cs / Tc Fresh Resin Addition and Removal**

Study Area/Keyword Operability Problem

Event Identifier	Initiating Event	Safeguards	Frequency	Hazard Consequence	Worker Consequence	Public Consequence
1614669/160	1. Resin fines. 2. Blockage in valve or pipe (likelihood equal). 3. Slurry density too high - poor/no flow. 4. Slurry density too low - insufficient charge of ion exchange column. 5. Fines cause filter blockage. 6. Potential for fines to enter column - potential for Cs to enter effluent line.	1. Fines preferentially float. 2. A gamma monitor is present on the effluent line. 3. Commissioning activities will determine correct slurry density. 4. Duplex filter with backwashing. 5. Protective wear for operators.	3	1. Plant may require recovery operation. 2. Potential dose uptake hazard to maintainers. 3. Resin fines - inhalation hazard to operator.	2	1
1614669/185	1. Off spec resin - unable to feed melter. 2. At temperatures above 80C resins start to degrade and become "sticky" and difficult to handle.	1. None Identified at this time	2	1. Operability hazard - plant throughput may be adversely affected.	1	1
1614669/188	1. Potential of spent resin to V2902 due to plugged hydro cyclone.	1. None Identified at this time	1	1. Operability hazard - plant throughput may be adversely affected. 2. May require recovery / maintenance operations.	1	1

Fault Schedule: Operability Concerns

(Sheet 9)

System: LAW Vitrification Off-Gas Treatment

Study Area/Keyword Operability Problem

Event Identifier	Initiating Event	Safeguards	Frequency	Hazard Consequence	Worker Consequence	Public Consequence
1614672/214	1. Change-over of HEME cartridges when melter is operational.	1. HEME change-over time short : 15-20 mins. 2. Standby emptied - seal maintained by both filters being run.	1	1. Potential dose uptake hazard to maintainers.	1	1

System: HLW Vitrification Off-Gas Treatment

Study Area/Keyword Operability Problem

Event Identifier	Initiating Event	Safeguards	Frequency	Hazard Consequence	Worker Consequence	Public Consequence
1614673/290	1. Replacement of cartridges whilst maintaining operation of melter.	1. All operations are remote. 2. HEPA pre-filter, G4303, to be changed when not required for metal filter drying. 3. Iodine adsorption columns of this type (silver zeolite) are an established technology.	1	1. Potential dose uptake hazard to maintainers.	1	1

Fault Schedule: Operability Concerns

(Sheet 10)

System: **Outcell Process Reagents**

Study Area/Keyword Operability Problem

Event Identifier	Initiating Event	Safeguards	Frequency	Hazard Consequence	Worker Consequence	Public Consequence
1614683/134	1. Remote operation.	1. Two tanks one for making up, one for mixing and one for discharging. 2. Ammonia is only reagant needed to be supplied continuously (to support melter off-gas capability). 3. Within cycle time there is time to recover for the rest of the process.	4	1. Operability problem - negligible operator or public consequence.	1	1

Fault Schedule: Operability Concerns

(Sheet 11)

System: **LAW Vitrification Emergency Off-Gas System**

Study Area/Keyword Operability Problem

Event Identifier	Initiating Event	Safeguards	Frequency	Hazard Consequence	Worker Consequence	Public Consequence
1614687/172	1. Monitoring of depression in emergency off-gas system. 2. Bubbling when the melters are off will lead to entrainemant in the gas. 3. Uncertainty over behaviour of volatiles in the metler during long term operation. 4. Filter may be a problem if operation is for an extended time.	1. Pressure drop across filters is monitored. 2. If control flow is increased to VXA, flow via emergency line will decrese, allowing system to be reset. 3. Duty of emergency off-gas system is low - operation more likely during melter shut down. 4. System can be run for an extended time.	3	1. Operability problem only - neglgible dose consequences.	1	1
1614687/193	1. The metal filter requires replacement.	1. Metal filters are more durable than ceramic filters.	3	1. Metal filter may require replacement - a difficult operation.	1	1

Fault Schedule: Operability Concerns

(Sheet 12)

System: HVAC

Study Area/Keyword Operability Problem

Event Identifier	Initiating Event	Safeguards	Frequency	Hazard Consequence	Worker Consequence	Public Consequence
1614700/513	1. Variation of heat load due to the number in operation at any one time. 2. Filter change-out.	1. Duty and standby operation to allow for maintenance. 2. Change in heat duty catered for by change in cooling supply. 3. Location of temperature sensor to avoid local hot spots. 4. Additional heat loads to the rooms insiginficant compared with load due to the operation of the melters. 5. Filters are changed in campaigns (at an initial frequency of once per 1 - 2 years).	3	1. None identified at this time.	1	1

Fault Schedule: Operability Concerns

(Sheet 13)

System: **LAW Vitrification Line Product Handling**

Study Area/Keyword Operability Problem

Event Identifier	Initiating Event	Safeguards	Frequency	Hazard Consequence	Worker Consequence	Public Consequence
1614772/186	1. Inspection of completed weld. 2. Accurate filling of container with inert material to meet contract spec. 3. Contaminated welding land. 4. Glass adheres to outside of container. 5. Square container not accurately monitored, due to geometry.	1. CCTV inspection used to view weld - parameters will be monitored. 2. Welding land clean prior to commencement of welding. 3. Manual recovery routes made available. 4. Sequences are initiated manually.	3	1. Poor weld quality due to : i) Incell environment, restricted field of vision. ii) Inclusion. 2. Inability to export.	1	1

Fault Schedule: Operability Concerns

(Sheet 14)

System: **LAW/HLW Melter Maintenance**

Study Area/Keyword Operability Problem

Event Identifier	Initiating Event	Safeguards	Frequency	Hazard Consequence	Worker Consequence	Public Consequence
1614774/276	1. Gross failure leading to glass spillage over cell. 2. Glass spillage from evacuation canister (used to empty failed melter). 3. Melter collapse (?). 4. Handling requirements evacuation components. 5. Position and supply of melter consumable items (skip). 6. Gaps between rail and bogie.	1. Sufficient support underneath the melter. 2. If skip loaded with new consumable itemsnot available, then operations can take place using manipulators or crane. 3. Different skips used for new and used consumable items - reducing the number of bogie movement operations. 4. Glass may solidify in melter before disconnection. 5. Good lighting provided for clear visibility of in-cell operations. 6. Availability of recovery routes.	3	1. Inability to re-use cell. 2. Large glass spillages requiring clean-up. 3. Failed melter cannot be moved : wheels 'frozen' due to build-up of glass (if wheels used). Air pads frozen. 4. Glass spillage in export tunnel. 5. Shock loads on melter as the melter traverses gaps between rails and bogie.	1	1

Fault Schedule: Operability Concerns

(Sheet 15)

System: **Cs Line**

Study Area/Keyword Operability Problem

Event Identifier	Initiating Event	Safeguards	Frequency	Hazard Consequence	Worker Consequence	Public Consequence
1614775/395	1. Difficulties with couplings. 2. Taking samples, e.g. swabbing. 3. Observation of operations (e.g. container properly on bogie, cannister within container). 4. Throughput considerations. 5. Disposal of wastes and consumables.	1. Viewport available to permit observation of Cannister within Container. 2. Ceasium Nitrate buffering tank. 3. Components, eg flexibels, can be disposed of in waste containers. 4. Expeience gained from the operation of other plants may provide a solution to the problem of swabbing.	4	1. None identified at this time.	1	1

Fault Schedule: Operability Concerns

(Sheet 16)

System: Waste Storage Operations

Study Area/Keyword Operability Problem

Event Identifier	Initiating Event	Safeguards	Frequency	Hazard Consequence	Worker Consequence	Public Consequence
1614776/277	1. Bogie positioning. 2. Manual recovery. 3. Removal of lid bolts. 4. Remote operations. 5. Correct identification of container.	1. Bogie lock to ensure flask correctly postioned. 2. Manual recovery provided. 3. Lid bolts located in a rack interlocked preventing further operations unless all bolts are removed. 4. Pneumatic tool to remove bolts. 5. Bogie locked into position underneath the gamma gate. 6. Flasks suspended through bogie above centre of gravity to elimate toppling or tilting. 7. CCTV / viewing ports provided. 8. Operator interface required to correctly identify container.	3	1. Movement of flask during operation.	1	1

System: LAW/HLW Solid Waste Handling

Study Area/Keyword Operability Problem

Event Identifier	Initiating Event	Safeguards	Frequency	Hazard Consequence	Worker Consequence	Public Consequence
1614778/331	1. Overfill of container (higher activity).	1. Container filling controlled by visual inspection. 2. Size reduction checks on downsizing.	3	1. Inability to close / handle container.	1	1

Fault Schedule: Operability Concerns

(Sheet 17)

System: **Cs Removal using Ion Exchange**

Study Area/Keyword Operability Problem

Event Identifier	Initiating Event	Safeguards	Frequency	Hazard Consequence	Worker Consequence	Public Consequence
2100/10	1. Three different routings, with potential for mis-routing of liquors. 2. Operability issues were covered in the consideration of overconcentration of feed (Reference 2100/4).	1. Temperature instrumentation to prevent liquors being recycled that are incompatable with normal process streams.	3	1. Misrouted liquor could be too thermally hot for ion exchange columns. Potential for inefficient or ineffective ion exchange process. Potential for increased dose uptake to Workers.	2	1
2200/14	1. Ion exchange cloumn loaded and second pair still under regeneration. 2. Spent resin removal. 3. Control of Acid Concentration.	1. Can operate with only one IX bed if required but throughput affected.	3	1. Process stopped until IX bed becomes available. 2. Plant throughput affected if ion exchange column loaded and second pair still being regenerated (operability problem only). 3. Concentration higher than 5M damages resin. 4. Incorrect concentration may affect column operation (2M caustic used and made up with 19M caustic).	1	1

Fault Schedule: Operability Concerns

(Sheet 18)

System: **LAW/HLW Glass Melter**

Study Area/Keyword Glass Former Feed System to LAW Concentrate System - Operability Problem

Event Identifier	Initiating Event	Safeguards	Frequency	Hazard Consequence	Worker Consequence	Public Consequence
3200/142	1. Transfer of liquor from mixing tank in cell may be difficult (high temp., thick material).	1. All lines provided with wash down facilities. 2. Recirculation lines provided to aid flow into the melter, to avoid settle-out speed, whilst providing sufficiently low feed to the melter.	1	1. Potential for inefficient transfer or process delay.	1	1

System: **LAW/HLW Glass Melter**

Study Area/Keyword Glass Melter Off-Gas System - Operability Problem

Event Identifier	Initiating Event	Safeguards	Frequency	Hazard Consequence	Worker Consequence	Public Consequence
3200/195	1. Maintenance. 2. Solids handling (Solids evolution rate expected to be of the order of 100's kg/day).	1. Design is for remote maintenance of components. 2. An appropriate solids handling regime, nozzle clearing, will be implemented.	3	1. Potential for dose uptake during maintenance operations.	1	1

Fault Schedule: Operability Concerns

(Sheet 19)

System: **LAW/HLW Glass Melter**

Study Area/Keyword Glass Melter System - Operability Problem

Event Identifier	Initiating Event	Safeguards	Frequency	Hazard Consequence	Worker Consequence	Public Consequence
3200/168	1. Melter may contain a minimum quantity of glass. 2. Catastrophic grid and standby power supply failure. 3. Transformer failure or busbar failure. 4. Bubbler failure - replacement of bubbler unit likely to be a difficult operation (Bubblers function is to force convection through the body of molten glass, requiring a pressure of about 70 psi).	1. Evacuated cannisters. 2. Frozen glass within melter. 3. Standby diesel generators will backup supply within 30 seconds. 4. Ability to recover from cold glass will be built into the melter. 5. In the event of a catastrophic melter failure it is intended to remove the melter together with a full load of glass. 6. There is a constant air purge through the bubblers to prevent glass entering the tube. 7. Improvements are sought for the replacement of bubblers.	1	1. Melter failure - may require replacement.	1	1

Fault Schedule: Operability Concerns

(Sheet 20)

System: **LAW/HLW Glass Melter**

Study Area/Keyword HA Glass Melter System - Operability Problem

Event Identifier	Initiating Event	Safeguards	Frequency	Hazard Consequence	Worker Consequence	Public Consequence
3200/250	1. Accumulation of noble metals. (HA Only). 2. Melter must always contain a minimum quantity of glass. 3. Catastrophic grid and standby power supply failure. 4. Transformer or busbar failure. 5. Bubbler failure - replacement is a difficult operation (Bubblers function is to force convection through the body of molten glass, requiring a pressure of about 70 psi).	1. Sloped floor and accumulation volume. 2. Evacuated cannisters. 3. Break frozen glass within melter (move to termination). 4. Standby diesel generators will backup supply within 30 seconds. 5. Constant air purge through the bubblers to prevent glass entering tube. 6. Tighter temperature control of the HA Melter is required, compared with the LA Melter, due to glass chemistry differences - temperatures must be maintained to ensure that recrystallisation does not occue in HLW. 7. Design criteria for the melter will be to recover from cold glass, i.e. to restart melter. 8. In the event of a catastrophic melter failure it is intended to remove the melter together with a full load of glass. 9. Transient operation is to be avoided.	3	1. Melter failure - may require replacement.	1	1

Fault Schedule: Operability Concerns

(Sheet 21)

System: LAW/HLW Glass Melter

Study Area/Keyword HA Melter Feed Tanks System - Operability Problem

Event Identifier	Initiating Event	Safeguards	Frequency	Hazard Consequence	Worker Consequence	Public Consequence
3200/224	1. Transfer of liquor from mixing tank in cell could be difficult (high temp., thick material).	1. All lines provided with wash down facilities. 2. Pulsed flows are used to prevent settling.	4	1. Potential for inefficient transfer or process delay.	1	1

System: LAW/HLW Glass Melter

Study Area/Keyword nactive Glass Former Feed - Operability Problem

Event Identifier	Initiating Event	Safeguards	Frequency	Hazard Consequence	Worker Consequence	Public Consequence
3200/118	1. Handling of fine powders. 2. Erosion / Corrosion. 3. Maintainability of transport systems. 4. Screw conveyors jammed whilst transporting silica. Other materials may also clog conveyors. 5. Boric acid is hygroscopic - may cause clogging (dependant on ambient humidity). 6. Man access below transport systems.	1. Gravity discharge option to be studied as an alternative a to screw conveyor. 2. Adequate design of storage hoppers.	3	1. Clumping, blockages of feed material. 2. Metal particles from upstream erosion enters melter - causes gross reduction in melter life.	1	1

Fault Schedule: Operability Concerns

(Sheet 22)

System: **LAW Container Decontamination**

Study Area/Keyword Operability ProblemOperability Problem

Event Identifier	Initiating Event	Safeguards	Frequency	Hazard Consequence	Worker Consequence	Public Consequence
9101/14	1. High pressure water discharge nozzels need replacement at frequent intervals due to erosion. 2. Disposal of contaminated waste is also a problem.	1. MSM replacement of nozzles. 2. Remote operation - man access into cell not required. 3. Appropriate disposal route for contaminated waste. 4. Lifetimes of nozzels will be enhanced by appropriate choice of quality materials, with low erosion rate.	4	1. Economic impact to plant. 2. Potential for mis-routing waste.	1	1

Appendix C

Environmental Fault Schedules

This page intentionally left blank.

Fault Schedule: Environmental Concerns

(Sheet 1)

System: LAW Feed Receipt

Study Area/Keyword Transfer from DST to Facility - Environment Hazard

Event Identifier	Initiating Event	Safeguards	Frequency	Hazard Consequence	Worker Consequence	Public Consequence
0/30	1. Risk to groundwater. 2. Aerial discharge limits. 3. Animal migrations into/out of tank farm areas.	1. Co-axial lines, DST etc. 2. Stack monitoring. 3. Compiance with part B permit. 4. Use of screens, covers as appropriate.	2	1. Animal damage (rabbits, mice birds).	1	1

System: Entrained Solids Removal System

Study Area/Keyword Environment Hazard

Event Identifier	Initiating Event	Safeguards	Frequency	Hazard Consequence	Worker Consequence	Public Consequence
1/30	1. See overfilling of vessel concern.	1. None Identified at this time	2	1. Environmental Impact : Mis-routed liquors (Refer to Domino).	1	1

Fault Schedule: Environmental Concerns

(Sheet 2)

System: Condensate/Plant Wash And Drain Systems

Study Area/Keyword Environment Hazard

Event Identifier	Initiating Event	Safeguards	Frequency	Hazard Consequence	Worker Consequence	Public Consequence
1614665/151	None Identified	1. Heat recovered from steam and recycled as flash steam. 2. Other materials recycled where possible.	2	1. Discharge of effluent outside limits will result in imposition of fine by Washington State	1	3

System: HLW Melter Feed Receipt And Pretreatment

Study Area/Keyword Environment Hazard

Event Identifier	Initiating Event	Safeguards	Frequency	Hazard Consequence	Worker Consequence	Public Consequence
1614666/139	1. Washings mis-routed.	1. Recirculating cooling water system. 2. Lifetime filters. 3. Efficient pumps.	4	1. Environmental Impact : Washings routed to ETF ?	2	1

Fault Schedule: Environmental Concerns

(Sheet 3)

System: Cs And Tc Nitric Acid Recovery

Study Area/Keyword Environment Hazard

Event Identifier	Initiating Event	Safeguards	Frequency	Hazard Consequence	Worker Consequence	Public Consequence
1614667/137	1. Nitric acid in vent system. 2. NOX and other gaseous emissions.	1. Ventilation : Cold nitric acid routed away from personnel. 2. NOX emissions are minimal. 3. Inactive feed tanks in well ventilated rooms.	2	1. Environmental Impact :	2	2

System: Cs / Tc Fresh Resin Addition and Removal

Study Area/Keyword Environment Hazard

Event Identifier	Initiating Event	Safeguards	Frequency	Hazard Consequence	Worker Consequence	Public Consequence
1614669/176	1. Fines. 2. Reagent disposal.	1. Appropriate disposal routes and destinations will be provided.	2	1. Environmental Impact : i) Fines to atmosphere.	2	1

Fault Schedule: Environmental Concerns

(Sheet 4)

System: LAW Vitrification Off-Gas Treatment

Study Area/Keyword Environment Hazard

Event Identifier	Initiating Event	Safeguards	Frequency	Hazard Consequence	Worker Consequence	Public Consequence
1614672/281	1. Environmental discharges out of specification. 2. Failure of system or part of system.	1. Recirculation of cooling water. 2. System reduces atmospheric emmisions.	3	1. Environmental Impact : i) Increased water consumption. ii) Increased NOx discharges. iii) Increased NH3 discharges.	1	1

System: HLW Vitrification Off-Gas Treatment

Study Area/Keyword Environment Hazard

Event Identifier	Initiating Event	Safeguards	Frequency	Hazard Consequence	Worker Consequence	Public Consequence
1614673/307	None Identified	1. System is designed to reduce discharges to the environment. 2. Waste crushed to reduce volume. 3. Washings re-cycled back through the plant.	4	1. Environmental Impact : i) Increased water consumption.	1	1
1614673/332	1. Fixed speed fan. Energy efficiency issue. 2. Recirculation of caustic in scrubber. Discharge(to ETF) issue.	1. Variable speed fan is more energy efficient.	4	1. None Identified at this time	1	1

Fault Schedule: Environmental Concerns

(Sheet 5)

System: Boiler Water Heat Recovery System

Study Area/Keyword Environment Hazard

Event Identifier	Initiating Event	Safeguards	Frequency	Hazard Consequence	Worker Consequence	Public Consequence
1614682/163	1. Re-use of water supplies.	1. No water re-use if it has been into a C3 or C4 vessel.	4	1. Water re-use would require use of more chemicals.	1	1

System: Outcell Process Reagents

Study Area/Keyword Environment Hazard

Event Identifier	Initiating Event	Safeguards	Frequency	Hazard Consequence	Worker Consequence	Public Consequence
1614683/148	1. EPA requirements to control/eliminate releases eg from pumps,valves.	1. Collection of spillages and scrubbing of vent systems.	4	1. None Identified at this time	1	1

Fault Schedule: Environmental Concerns

(Sheet 6)

System: LAW Vitrification Emergency Off-Gas System

Study Area/Keyword Environment Hazard

Event Identifier	Initiating Event	Safeguards	Frequency	Hazard Consequence	Worker Consequence	Public Consequence
1614687/183	1. Plate out on large diameter lines. 2. NOx emissions from operating plant.	1. Plated-out Cs, etc., could be removed mechanically. 2. Second scrubber will maintain acceptable NOx emissions (by use of water scrubber). 3. Detailed deign to incoporate decontamination as required. 4. All liqours/effleunts are recycled. 5. Plate out on large diameter lines. not likely to present serious problems due to length of time of operation.	3	1. Plate-out problem not likely to be significant.	1	1
1614687/205	1. Plate out on large diameter lines. 2. NOx emissions from operating plant.	1. Plated-out Cs, etc., could be removed mechanically. 2. HLW chemistry is more benign than LAW. 3. HEPA filteration. 3. Discharged activity is well within any authorised limits.	4	1. Plate-out gives rise to enhanced activity discharges. Potential for increased dose uptake to workers.	1	1

Fault Schedule: Environmental Concerns

(Sheet 7)

System: HVAC

Study Area/Keyword Environment Hazard

Event Identifier	Initiating Event	Safeguards	Frequency	Hazard Consequence	Worker Consequence	Public Consequence
1614700/578	1. Aerial effluent discharges.	1. Stack discharge monitoring system. 2. Stack sampling on C2 extract before discharge.	4	1. Increased aerial arisings resulting in increased dose uptake to the Public.	1	1

System: Cs Line

Study Area/Keyword Environment Hazard

Event Identifier	Initiating Event	Safeguards	Frequency	Hazard Consequence	Worker Consequence	Public Consequence
1614775/452	1. Vessel vent arisings discharge. 2. Water usage.	1. Vessel vent clean-up (e.g. NOx removal). 2. Water usage will be minimised where possible (e.g. for washings).	2	1. None identified at this time.	1	1

Fault Schedule: Environmental Concerns

(Sheet 8)

System: Cs Removal using Ion Exchange

Study Area/Keyword Environment Hazard

Event Identifier	Initiating Event	Safeguards	Frequency	Hazard Consequence	Worker Consequence	Public Consequence
2200/31	1. Resin disposal. 2. Caustic / acid disposal.	1. Resin disposed of in melter feed. 2. Re-use of caustic and acid recovered and re-used. 3. Resin re-used and replaced at need when performances deteriorates to predetermined level (and to avoid degradation). 4. Resin regenerated to maximum capability. 5. DMW and caustic recycled. 6. Re-use of acid.	4	1. Environmental Impact : i) Disposal of Caustic. ii) Increased water usage.	1	1

System: LAW/HLW Glass Melter

Study Area/Keyword Glass Melter Off-Gas System - Environment Hazard

Event Identifier	Initiating Event	Safeguards	Frequency	Hazard Consequence	Worker Consequence	Public Consequence
3200/212	1. Discharge to ETF.	1. There are options to send effluents to the ETF from this area. This will be done under a sample and sentencing regime.	4	1. Environmental Impact :	1	1

Fault Schedule: Environmental Concerns

(Sheet 9)

System: LAW/HLW Glass Melter

Study Area/Keyword Glass Melter System - Environment Hazard

Event Identifier	Initiating Event	Safeguards	Frequency	Hazard Consequence	Worker Consequence	Public Consequence
3200/186	1. Solid waste (disposal of consumable items).	1. Part of solid waste disposal strategy.	4	1. Environmental Impact :	1	1

System: LAW/HLW Glass Melter

Study Area/Keyword HA Glass Melter System - Environment Hazard

Event Identifier	Initiating Event	Safeguards	Frequency	Hazard Consequence	Worker Consequence	Public Consequence
3200/268	1. Solid waste (disposal of consumable items).	1. Part of solid waste disposal strategy.	4	1. Environmental Impact :	1	1

Fault Schedule: Environmental Concerns

(Sheet 10)

System: **LAW Container Decontamination**

Study Area/Keyword Environment Hazard

Event Identifier	Initiating Event	Safeguards	Frequency	Hazard Consequence	Worker Consequence	Public Consequence
9101/30	1. Improper management of energy 2. Excess use of water 3. Discharge of washings.	1. Equipment powered only when used. 2. System uses minimal amounts of demin water. 3. Secondary containment of active waste provided. 4. Washings sent to appropriate drain; ETF or TEDF. 5. Controls are applied on discharge route for water.	3	1. Environmental Impact :	1	1

Appendix D

Management Response Letter

This page intentionally left blank.

Dear Mr. Bullock,

References:

1. Letter M. Page (BEL Technical Manager) to Leanne Smith (ESH Manager), 23 September 1997. BEL reference K0104_COR_202_PRC.

2. Letter M. Clements (GTSD Asst. Project Manager) to Leanne Smith (ESH Manager), 23 September 1997.

The BNFL subcontractors (BEL and GTSD) involved in the Part A design process have considered the findings of the Preliminary Hazards Analysis (PHA) carried out as part of the integrated safety approach.

The PHA process examined the conceptual design that identified potential hazards and addressed the design with a view to eliminating or effectively controlling hazards.

BEL and GTSD are committed to taking the results of the PHA and incorporating them into continued design work (References 1, 2). All actions raised have been considered, however due to the evolving nature of the design, many remain ongoing. Early in Part B, further action reviews will take place to ensure that the results of the PHA process continue to be carried forward into design activities.

Leanne Smith
Environmental, Safety, and Licensing Manager, BNFL Inc.

cc:

R. Hall
S. Turner
J. Saame
D. Welsby
I. McCourty
W. Conn

This page intentionally left blank.

Appendix E

Part A HAR Significant and Bounding Hazard Evaluations

NOTE: This Appendix was added per approved ABAR-W375-00-00014, Rev. 0. Since it is all new, no redline/strikeout was used except where changes are made to the text as it was included in the ABAR.

This page intentionally left blank.

1.0 Introduction

This appendix identifies the changes to the significant and bounding hazard evaluations that have occurred since approval of Revision 0 of the Part A *Hazard Analysis Report* (HAR) as a result of design changes and of hazard evaluations conducted during Integrated Safety Management (ISM) Cycles I and II.[2] In some cases, new hazards are identified. Also, the consequences of some hazard evaluations have increased.

By RU letter 99-RU-0338 (dated June 10, 1999), the RU approved the authorization basis amendment request for the ISMP to state that only the parts of the HAR that address significant or bounding hazard evaluations are considered a part of the authorization basis.

2.0 Identification of Significant and Bounding Hazard Evaluations in the Part A HAR

This section describes the process used to identify the significant and bounding hazards and hazardous situations in the Part A HAR.

2.1 HAR Rev. 0 Identification Process

The significant and bounding hazards were derived from the relevant portions of the *Hazard Analysis Report*, Rev. 0, and the *Initial Safety Analysis Report*, Rev. 0, as summarized below.

1. ISAR section 4.7, “Results of the Integrated Safety Analysis”, and ISAR Appendix 1A, “BNFL Overall Safety Approach”, Table 3-3, “Identified Hazards and Part A Controls”, were reviewed for the significant and bounding hazards that had been identified in the HAR.
2. Chapter 6 of the HAR, as revised October 16, 1997 (BNFL letter #5193-97-0511), was reviewed to identify additional significant and bounding hazards. Chapter 6 presents the events that resulted from sorting the fault schedule database for those events assigned worker or public consequence categories greater than 2.
3. HAR Table 4-1 was reviewed to develop a list of the radioactive streams that represent a significant or bounding hazard to the facility.
4. HAR Tables 4-2, 4-3 and 4-4 were reviewed to develop a list of the chemicals and their byproducts that represent a significant hazard to the facility.
5. HAR Table 4-5 was reviewed to develop a list of the energy sources that represent a significant hazard to the facility.

[2] Integrated Safety Management (ISM) is RPP-WTP’s application of the process for establishing a set of radiological, nuclear and process safety standards and requirements in accordance with DOE/RL-96-0004, Rev. 1, and RL/REG-98-17, Rev. 1, as set forth in SRD Vol. II, Appendix A. ISM Cycles I and II refer to the first two iterations of the ISM process during Part B-1.

6. The fault schedules in Chapter 5 and Appendices A and B of the HAR were reviewed to add to, or revise, the bounding or significant hazards not identified in Steps 1 – 5. The "Worker Consequence" and "Public Consequence" columns of the fault schedules aided in the identification of the significant and bounding hazards. However, since many of the fault schedules were based upon the event being mitigated, the events were re-evaluated to determine the potential unmitigated consequences.

The following sections of the Part A HAR do not include information defining significant or bounding hazards and, thus, are not part of the AB:

- Chapter 1.0, Introduction
- Section 2.0, Facility Description
- Section 2.1, Site Description
- Section 2.2 Facility Description
- Section 2.3, Process Description
- Chapter 3.0, Hazard Analysis Methodology
- Section 4.1, Hazardous and Radioactive Materials (except for Tables 4-1, 4-2,and 4-3 discussed above)
- Section 4.2, Chemical Interactions (except for Table 4-4)
- Section 4.3, Energy Sources (except Table 4-5)
- Section 4.4 Comparison to Similar Facilities
- Section 5.1, Scope of Hazard Evaluation Studies
- Section 5.2,Process Steps, text descriptions
- Chapter 7.0, Items Requiring Future Study; Action Items
- Chapter 8.0, Management Response to Hazard Evaluation Study Issues
- Chapter 9.0, References
- Appendix D, Management Response Letter.

2.2 Identification of Changes to Significant and Bounding Hazard Evaluations in the Part A HAR

During Part B-1, the hazard evaluation process continues to evolve. In accordance with DOE/RL-96-0004 (Reference 5), the hazard evaluation step of the Integrated Safety Management process is iterated due to changes in the identification of work (e.g., design changes), as well as due to feedback from the control strategy development and standards identification and confirmation steps. Thus, the new and changed significant and bounding hazards represent a natural evolution of the ISM process.

Changes to the significant and bounding hazard evaluations that have occurred since Rev. 0 of the Part A HAR were identified by a review of the results of ISM Cycles I and II. The HAR Rev. 0 significant and bounding events identified by the process described in Section 2.1 were compared against the ISM Cycle II data to determine those hazards that constitute either new or changed significant and bounding hazards.[3]

2.3 Results

Table E-1 identifies the changes to the significant and bounding hazard evaluations that have occurred since approval of the Part A HAR, Rev. 0.

3.0 References

1. BNFL-5193-ISP-01, Rev. 4b, November 9, 1999, *Integrated Safety Management Plan*, BNFL Inc., Richland, Washington.
2. Letter #99-RU-0338 from D. Clark Gibbs, DOE-RL Office of Radiological, Nuclear and Process Safety Regulation, to M. J. Lawrence, BNFL Inc., "Authorization Basis Amendment Request, ABAR-W375-99-0005", June 10, 1999, Richland, Washington (CCN # 004000).
3. BNFL-5193-HAR-01, Rev. 0, September 26, 1997, *Hazard Analysis Report*, BNFL Inc., Richland, Washington.
4. BNFL-5193-ISA-01, Rev. 0, January 12, 1998, *Initial Safety Analysis Report*, BNFL Inc., Richland, Washington.
5. DOE/RL-96-0004, Revision 1, July 1998, *Process for Establishing a Set of Radiological, Nuclear, and Process Safety Standards and Requirements for TWRS Privatization*, U.S. Department of Energy, Richland, Washington.

[3] As of the date of this revision, the accident analysis and DBE identification efforts were in process.

Table E-1. Changes to Significant and Bounding Hazard Evaluations

HAR Location	System	Event Description/Energy Source/Waste Stream	Comment
Loss of Confinement (radioactive liquid release)			
New evaluation	LAW Feed Receipt System	Overfilling or leaking of in-cell vessels	Potentially larger consequences than previously evaluated due to larger radioactive inventories associated with new LAW Feed Receipt Tanks.
New evaluation	N/A (Pretreatment process component being removed for maintenance)	Spill of process liquor onto C2 Pump & Valve Gallery.	
New evaluation	Crane (Pretreatment)	Component drop onto process lines in C5 cell results in pipe break and liquid release.	
Chemical Liquid Release or Mishandling			
Loss of Confinement (gas or particulate release)			
New evaluation	HLW receipt vessels V12001 A-F	Overblow of PJM results in aerosol release to vessel vent.	
1614778/342	HLW cask handling equipment	Dropped cask with waste drum.	
Fire			
Flammable Gas Fire/Explosion			
New evaluation	PT Feed Receipt System	Radiolytic hydrogen fire/explosion; pump motor ignition source, static spark, etc.	Potentially larger consequences than previously evaluated due to larger radioactive inventories and tank void space associated with Feed Receipt Tanks. Hydrogen event is more energetic than previously evaluated.
1614666/122	HLW Concentrate Receipt Tanks (V31001/V31002)	Radiolytic hydrogen generation leading to fire/explosion	Hydrogen explosions were deemed incredible in Part A HAR, Rev. 0.
Overpressure			

Table E-1. Changes to Significant and Bounding Hazard Evaluations

HAR Location	System	Event Description/Energy Source/Waste Stream	Comment
Airborne Toxic Hazard			
See comment.	LAW Melter Offgas	Overpressurization of melter and release of radioactive/toxic offgas into melter enclosure and leakage to occupied areas.	Although the NOx hazard was recognized in the Part A HAR, it was not identified as a significant or bounding hazard; therefore, it is included herein.
Direct Radiation Hazard			
1614776/295	Waste Storage Operations	Direct exposure due to improper placement of IHLW product canister in import tunnel	Consequences increased due to larger canister size.
Energy Sources			
Major Radioactive Streams			
Table 4-1	LAW Feed	The Envelope A, B, and C feed is stored in six, 1302 m^3 (operating capacity) receipt tanks.	Previously, one 225 m^3 tank.
Table 4-1	HLW Feed	The Envelope D feed is stored in a 312 m^3 receipt tank	Previously, a 225 m^3 tank.
Table 4-1	Sr/TRU Product	Stored in three tanks; one has an operating capacity of 312 m^3, and other two each has an operating capacity of 86 m^3.	Previously, one 150 m^3 tank.

This page intentionally left blank.