AS
AMMETER SW.

CONTACT ODD	CONTACT EVEN	POSITION 3	*	*	*	2	*	*	*	1
1		X	X	X	X	X	X	X	X	
2									X	X
3									X	X
4					X	X	X			
5					X	X	X			
6		X	X	X	X		X	X	X	X
7			X	X	X	X	X	X	X	X
8		X	X							
9		X	X							

VS-1
VOLTMETER SW.

CONTACT ODD	CONTACT EVEN	POSITION 3-N	2-N	1-N
1		X		X
2			X	X
3			X	
4		X		

VS-2
VOLTMETER SW.

CONTACT ODD	CONTACT EVEN	POSITION 3-1	2-3	1-2
1		X		X
2			X	X
3			X	
4		X		

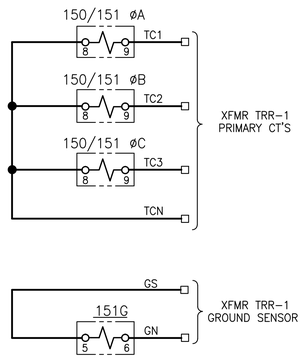

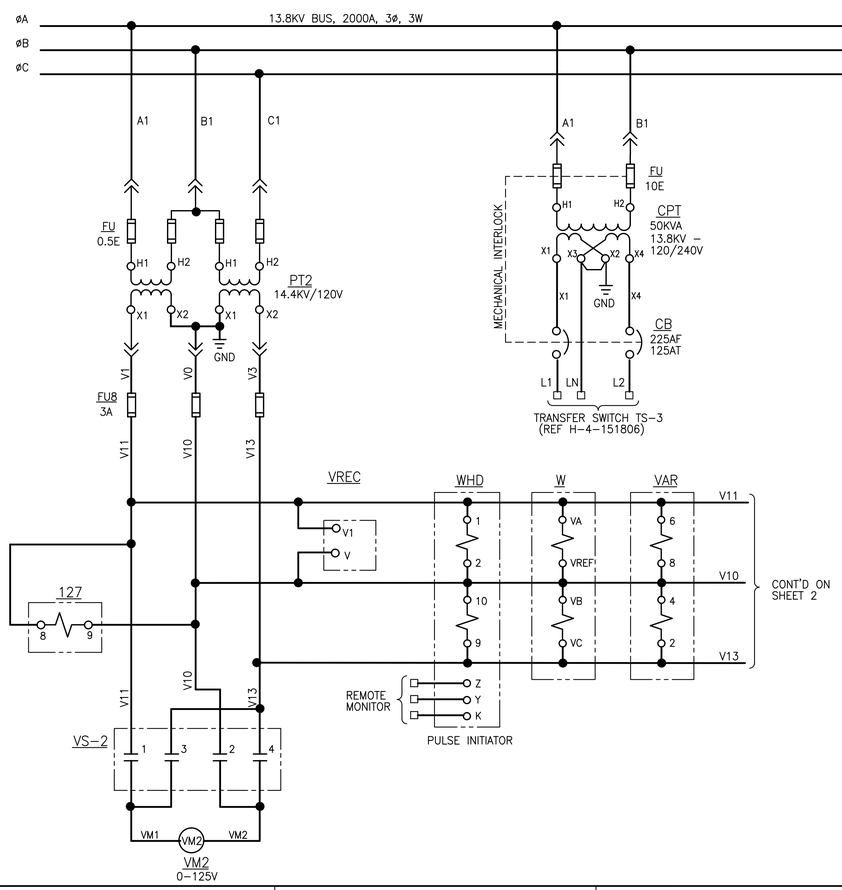

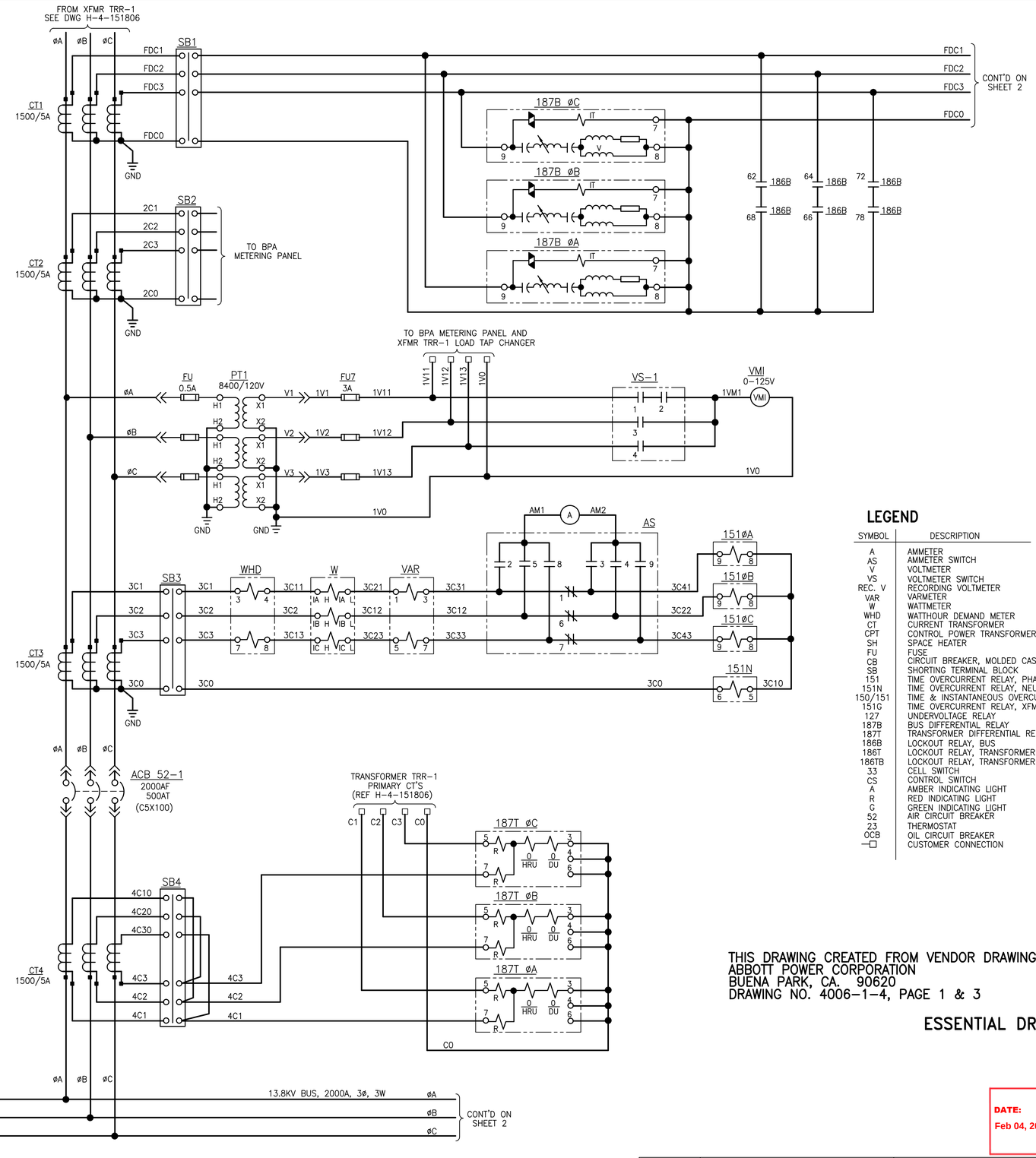

LEGEND

SYMBOL	DESCRIPTION
A	AMMETER
AS	AMMETER SWITCH
V	VOLTMETER
VS	VOLTMETER SWITCH
REC. V	RECORDING VOLTMETER
VAR	VARMETER
W	WATTMETER
WHD	WATTHOUR DEMAND METER
CT	CURRENT TRANSFORMER
CPT	CONTROL POWER TRANSFORMER
SH	SPACE HEATER
FU	FUSE
CB	CIRCUIT BREAKER, MOLDED CASE
SB	SHORTING TERMINAL BLOCK
151	TIME OVERCURRENT RELAY, PHASE
151N	TIME OVERCURRENT RELAY, NEUTRAL
150/151	TIME & INSTANTANEOUS OVERCURRENT RELAY
151G	TIME OVERCURRENT RELAY, XFMR GND
127	UNDERVOLTAGE RELAY
187B	BUS DIFFERENTIAL RELAY
187T	TRANSFORMER DIFFERENTIAL RELAY
186B	LOCKOUT RELAY, BUS
186T	LOCKOUT RELAY, TRANSFORMER
186TB	LOCKOUT RELAY, TRANSFORMER
33	CELL SWITCH
CS	CONTROL SWITCH
A	AMBER INDICATING LIGHT
R	RED INDICATING LIGHT
G	GREEN INDICATING LIGHT
52	AIR CIRCUIT BREAKER
23	THERMOSTAT
OCB	OIL CIRCUIT BREAKER
—□	CUSTOMER CONNECTION

THIS DRAWING CREATED FROM VENDOR DRAWING
ABBOTT POWER CORPORATION
BUENA PARK, CA. 90620
DRAWING NO. 4006-1-4, PAGE 1 & 3

ESSENTIAL DRAWING

DATE:
Feb 04, 2015
HANFORD RELEASE

DWG NUMBER	TITLE
DRAWING TRACEABILITY LIST	

REF NUMBER	TITLE
H-4-302797	13.8KV SWGR H-11 ELEMENTARY DIAGRAM
H-4-151806	ELECTRICAL SUBSTATION NO. 451-B SINGLE LINE DIAGRAM
H-4-150537	ELECTRICAL POWER INTERCONNECTING SINGLE LINE DIAG
H-4-102446	ELECTRICAL SWGR H-11 METERING & RELAY DIAG
H-4-65589	400 AREA ELECTRIAL UTILITIES SWITCHING DIAGRAM

REFERENCES

NEXT USED ON END ITEM

REV REL	REV NO.	DESCRIPTION
	1	REVISION PER ECR-13-001326

REVISIONS

BLDG. NO. 451B

INDEX NO. 8000 8002

CAUTION
NOT COMPLETE WITHOUT CURRENT CHANGE DOCUMENTS FROM DATABASE

ATTENTION
DESTROY THIS DOCUMENT BY SHREDDING MAY CONTAIN SENSITIVE INFORMATION

	NAME	DATE	COMPANY
REVISED BY	H0006592-RL PARSONS	2/4/2015	MSC
DESIGN AUTHORITY	H0009067-CE CARLSON	2/4/2015	MSC

U.S. DEPARTMENT OF ENERGY
Richland Operations Office

SUBSTATION 451-B
13.8KV SWGR H-11
THREE LINE DIAGRAM

SIZE F | DRAWING NUMBER H-4-302795 | SHEET 1 | REV 1

SCALE NONE

27304

DOE_TB_F.DWG (JAN 2012)

H-4-302795