Fall Protection

MSC-PRAC-30472

Revision 0

Effective Date: January 8, 2010

Topic: Safety and Health

Fall Protection

1.0 PURPOSE

This practice identifies a key aspect of the Safety and Health (S&H) program, and establishes the roles, responsibilities and for implementing fall protection, and for the safety and health of employees working MSA construction work activities and personnel associated directly with Hanford projects, as specified by MSA, DOE-RL and OSHA.

2.0 SCOPE

This practice identifies the requirements and guidance for establishing fall protection when employees are at risk of falling from elevated work positions equal to or greater than six feet, and incurring injury or bodily harm.

To ensure employees are not inadvertently exposed to fall hazards, each work area and process shall be evaluated to ensure engineering controls are in place to prevent exposure to fall hazards of six (6) feet or more. Use engineered barriers (guardrail systems, approved work platforms, scaffolds, or vehicle-mounted elevated work platforms) wherever possible to eliminate potential fall exposure.

These requirements do not apply to employees making inspections, investigation or assessment of workplace conditions prior to the actual start of construction work or after the completion of construction work, unless the aforementioned conditions place the employee at a higher risk than normal conditions.

Fall protection is required for the following circumstances:

- On scaffolds with incomplete decks or guardrails
- On roofs, where work is within six feet of the edge or side and there is no Warning Line System
- When removing/replacing floor planks, hole covers or grating from the last panel of a temporary floor
- When working from a ladder, at or above six feet (this does not apply to access/egress)
- In elevated locations, at or above six feet (horizontally or vertically), where employees are exposed to an unprotected fall hazard
- During steel erection
- Around floor openings, roofs, ceilings, wall, and other areas/surfaces where there is a “fall-through” hazard equal to or greater than six feet.

The requirements for the use of Fall Protection do not apply to the following:

- Use of portable ladders for access/egress to elevated work surfaces (not to exceed 24 feet)
- Accessing trucks and servicing large mobile equipment

3.0 APPLICATION

This practice applies to all MSA self-perform construction personnel, and subcontractor and contractors’ whose contract statement of work (SOW) require the adherence to this practice, this

includes, but not limited to management, supervision, craft and other employees who are actively involved in construction projects or those who enter into the construction work area. Sub-and lower-tier contractors will implement the following requirements, where their employees are working where there is a fall hazard equal to or greater than 6 feet.

4.0 RESPONSIBILITIES

4.1 The Safety and Health is responsible for the development, issuance and maintenance of this practice. All changes will be reviewed with project management and others.

4.2 Project Supervision (i.e., Construction Manager, Construction Supervisor/Superintendent and foremen) are responsible for the implementation of these requirements and guidelines for all construction, maintenance and other project work activities (in accordance with contractual requirements), and ensuring that each employee understands their roles and responsibilities, as it applies to their work activities.

4.3 The Buyer Technical Representative will ensure the requirements of this practice are communicated to the sub-contractor, through SOW or other contract document.

4.4 The employees (this includes project staff and craft employees) are responsible for complying with the requirements of this practice and when compliance cannot be achieved, the employee will Stop Work and contact supervision for resolution and/or correction of the issue or concern.

4.5 MSA projects and organizations are responsible for implementing the overall worker safety and health program and appropriate integration into contracting and work planning activities.

4.6 Sub-contractor Management and supervision are responsible for complying with the requirements of this practice and when compliance cannot be achieved, work shall be suspended and contact the project construction point-of-contact for resolution and/or correction of the concern or issue.

5.0 REQUIREMENTS

5.1 Specific Requirements

5.1.1 To ensure employees are not inadvertently exposed to fall hazards, each work area and process shall be evaluated to ensure engineering controls are in place to prevent exposure to fall hazards 6 feet or more. Engineered barriers (guardrail systems, approved work platforms, scaffolds, or vehicle-mounted elevated work platforms) shall be used wherever possible to eliminate potential fall exposure.

5.1.2 All employees working where there is an unprotected side/edge equal to or greater than six (6) feet at/or above a lower level, shall be protected from falling by fall protection.

NOTE: *Typically, this is in the form of a guardrail system or Personal Fall Arrest System (PFAS). However, other fall protection can be used, based on the job/task conditions and situations.*

5.1.3 Document fall hazards and controls on the Job Safety Analysis, which will provide detailed information for type of fall protection required and provided. This includes a detailed instruction on how to use fall protection, where the attachment point is located, inspection of fall protection, identification of the Competent Person and emergency procedures.

5.1.4 Employees shall maintain 100% fall protection when using "personal fall protection" (Personal Fall Arrest/Restraint Systems). Give consideration to the use of two lanyards so that one can be left attached while the second is being moved to the next anchorage.

5.1.5 Employees reaching more than 10 inches below the walking/working surface level shall be protected from falling, by use of a fall protection system.

5.1.6 Wear/use fall protection systems in accordance with manufacturers' instructions.

5.1.7 When designing individual anchorage points for fall protection devices, ensure the weight factor for workers is based on 310 pounds, including tools.

5.1.8 If employees are exposed to a fall hazard when working near a floor or wall opening to handle materials, they will wear a PFAS rigged in a fall restraint configuration.

5.1.9 Fall protection is designed into new construction in accordance with Appendix B.

5.1.10 Provide for prompt rescue of employees who fall, or provide means for employees to rescue themselves.

5.1.11 Stop elevated work requiring the use of fall protection whenever inclement weather conditions are present (such as snow, ice, thunderstorms, and winds greater than 30 miles per hour [26 knots per hour]).

5.2 Personal Fall Protection System

NOTE: *Personal fall protection applies to Personal Fall Arrest System (PFAS) or Personal Fall Restraint System (PFRS)*

5.2.1 Document the use of PFAS/PFRS in safety planning documents for example, JSA, AJHA, etc.

5.2.2 Employees required to wear PFAS/PFRS equipment will wear no less than a Class III full-body harness with a deceleration device attached to an approved attachment point.

5.2.3 Lanyards used in PFAS are designed and used to limit a person's fall to no more than 6 feet (plus the stretch factor of the shock absorbing lanyard), whereas, a PFRS is designed to limit a person from reaching a fall hazard.

5.2.4 Employees shall maintain 100% attachment (tie-off) when using PFAS/PFRS. When using a PFAS, use of two lanyards so that one can be left attached while the second is being moved to the next anchorage.

5.2.5 Remove from service and recertify (documented by the manufacturer) or destroy PFAS/PFRS equipment exposed to impact loading.

5.2.6 Safety harness and lanyard assemblies are capable of withstanding a tensile loading of 5000 pounds force without cracking, breaking, or taking a permanent deformation.

5.2.7 Employees will use a PFAS if working outside approved work platforms or guardrail systems.

5.2.8 Only attach a snap hook to another connector that is part of the PFAS/PFRS. Do not hook the snap-hook back onto the lanyard, unless the lanyard is approved (by the manufacturer) for that application.

5.2.9 The attachment point to the body harness should be in the center of the wearer's back, between the shoulder blades.

5.2.10 Only use PFAS/PFRS components for personnel protection and not for hoisting materials unless approved by the manufacturer for that purpose.

5.2.11 Do not use personally owned PFAS/PFRS, unless specifically approved by Construction Manager and Safety and Health.

5.3 Horizontal Lifelines

5.3.1 When using horizontal lifelines, ensure that they are designed by a Licensed Professional Engineer, and installed and used under the supervision of a Qualified Person.

5.3.1.1 A sketch or design will accompany any field safety planning documents, for reference by the Qualified Persons and employees using the system.

5.3.1.2 Horizontal lifelines shall maintain a safety factor of at least 2.

5.3.2 Install and use horizontal lifelines only when no other means of fall protection is available.

5.3.3 Horizontal lifelines will be installed above the working elevation for which it is intended (approximately 42 inches in height). If this cannot be achieved, contact Safety and Health for approval of location.

5.3.4 Horizontal lifelines shall be of no less than one half inch (1/2") steel cables, able to withstand a 5,400 pound drop and maintain tensile strength integrity of the material. If a fall is experienced while attached to a horizontal lifeline, that line shall be replaced.

5.3.5 Horizontal lifelines shall be installed in a length not to exceed two hundred feet (200'). Attach the live ends in such a manner that the ends are wrapped around a fixture so that it is facing the work area. As it is wrapped, a softener shall be installed to keep the cable from being marred or kinked.

5.3.6 Wrap the cable no less than one complete wrap around a beam or fixture and secure with no less than three (3) cable clamps of suitable strength. Prior to securing the cable, pull to at least 100 torque pounds.

5.3.7 During installation, and as the cable is passed through each bay, attach/support in increments of no more than 50 foot runs. To maintain the intended height and alleviate sag, affix the supporting material in such a manner to be immobile.

5.3.8 When working on elevations where there is no means for overhead attachment, supporting material will be attached from the same elevation in an upright manner.

5.3.9 Only allow 1 worker on a horizontal lifeline at a time, unless specifically designed for more than one worker.

5.4 Anchorages

5.4.1 Design anchorages for fall arrest to withstand a tensile force of 5,000 pounds force per person.
NOTE: *Fall arrest anchorage may be reduced to 13.3 kilonewtons (3,000 pounds) force per person when a self-retracting lifeline is used as part of the PFAS.*

5.4.1.1 Consider locating the anchorage directly at or above the mid-shoulder D-ring so that in the event of a fall, fall arrest begins immediately and produces minimal shock loading to the anchorage and the person.

5.4.1.2 Design fall arrest and restraint anchorages to a level less reduced from that stated above if designed under the supervision of a Qualified Person.

5.4.2 If anchorage points are not identified or shown in Appendix B, the anchorage point will be designed by a Licensed Engineer, and installed and used under the supervision of a Qualified Person.

5.4.3 Design anchorages points for fall restraint to withstand a tensile force of 4 times the intended load (such as the weight of the worker plus tools).

5.4.4 Secure a PFAS to an anchorage point having a minimum capacity of 5000 pounds (tensile strength).

5.4.5 Connectors are corrosion-resistant finish and all edges are smooth.

5.4.6 D-Rings and Snap-Hooks have a minimum tensile strength of 5000 pounds.

5.4.7 Snap-Hooks are designed to be compatible with the member they are being connected to, to prevent unintentional disengagement.

5.4.8 Ensure all Snap-hooks are self-locking.

5.4.9 Do not make the anchorage part of the work surface; locate it to start arresting the fall before 6 feet and to prevent falling or swinging into other structural members or equipment.

NOTE: *The potential for injury is minimized when an anchorage is selected for the shortest free fall distance possible, either by selection of the anchorage itself or by using the shortest lanyard possible; limit free fall to less than 2 feet when feasible.*

5.5 Guardrail System

5.5.1 Guardrail systems are provided as the primary fall prevention system for walking/working surfaces, unless the use of a guardrail system is infeasible. Where guardrail systems are infeasible, fall protection is worn.

5.5.2 Work areas that have open-sided floors, floor openings, platforms, or runways that present a fall hazard of 4 feet or more to a lower level are protected by a guardrail system. If a guardrail system is infeasible, fall protection is worn.

5.5.3 Guardrail systems consist of toprails, midrails, and toeboards. Install screens or mesh (when used) from the top rail to the walking-working level and along the entire opening between top rail supports.

5.5.4 Ensure that guardrail systems block access to the fall hazard except at ladders and stairs (Place a swing gate across a ladder opening unless the opening is barricaded or offset).

NOTE: *For additional guidance, refer to 29 CFR 1926.502 Appendix B.*

5.6 Working from Ladders

5.6.1 When working from ladders, use fall protection (when appropriate) whenever working at heights of 6 feet or above, as measured from the ladder base to the employee's feet.

EXCEPTION
When using a ladder (less than 24 feet in height) for access only to another level.

NOTE 1: *Document fall protection details in a pre-job planning document if the employee has to use personal fall arrest systems while using a ladder.*

NOTE 2: *Where it is determined that conventional methods of fall protection are not practical/feasible, a Fall Protection Permit for Portable Ladders (refer to Site Form Fall Protection Permit for Portable Ladders*, A-6003-949*) is completed and approved before the task begins and accessible during job performance. Such permit does not apply when the work is determined by the supervisor or competent person to be emergency in nature and immediately necessary to ensure worker safety, or to protect the environment, site systems, services, or structures.*

5.7 Scaffolds

5.7.1 Employees working from swinging scaffolds or boatswain's chairs use PFAS where the lanyard or lifeline is attached to an attachment point independent from the scaffold or chair.

5.7.2 Personnel involved in the erection or disassembly of a scaffold commence using safety harnesses and lanyards at the 6-foot working level, whenever feasible, if performing work at a stationary location for a period of time, and where components used for tie-off are deemed to be strong and stable enough to allow their use.

5.7.3 When scaffolds are incomplete, such as the handrail is missing or does not meet OSHA guidelines, fall protection will be worn where there is an exposure to a fall hazard greater than 6 feet or more.

5.8 Mobile or Aerial Work Platforms

5.8.1 Personnel working from elevated work platforms or aerial lifts wear a PFAS/PFRS attached to a designated anchorage point on the platform (according to the manufacturer's instructions).

NOTE: *This includes scissor lifts if the manufacturer provides an engineered attachment point (Check manufacturer's instructions/equipment operator's manual).*

5.8.2 When exiting a work platform or aerial lift, onto another working platform where there is a fall hazard greater than 6 feet, employees will maintain continuous fall protection.

5.9 Crane Suspended Platforms

5.9.1 All crane suspended work platforms must be approved by MSA Safety and Health.

5.9.2 Employees working from or riding a crane-suspended platform use a PFAS attached to an independent source (such as a support cable attached above the block or headache ball).

5.9.3 When exiting or entering a suspended platform, onto another working platform where there is a fall hazard greater than 6 feet, employees will use continuous fall protection.

NOTE 1: *Refer to practice MSC-PRAC-30477, Hoisting and Rigging, for requirements for crane-suspended work platforms.*

NOTE 2: *Crane suspended platforms must meet the requirements of 29 CFR 1926.502.*

5.10 Working on Roofs

NOTE: *In some cases facility management may impose additional controls and facility specific requirements for alternative fall protection systems. The additional facility specific requirements for alternative fall protection systems should be documented in the Fall Protection Plan or JSA/AJHA.*

5.10.1 A Fall Protection Plan, form A-6004-286 , is required when using safety monitor, warning line systems, and/or when conventional forms of fall protection are not feasible or create a greater hazard.

5.10.2 When a Fall Protection Plan is written where “conventional fall protection” is not feasible and/or creates a greater hazard, the plan must be approved by the Construction Manager and/or Facility Manager.

5.10.3 Employees engaged in roofing activities, with unprotected sides and edges 6 feet or more above lower levels or where “fall through” hazards exist shall be protected by fall protection systems.

5.10.4 For high-pitched roofs (slope of more than 4 in 12) that have unprotected edges, employees are protected by either a guardrail system or PFAS.

5.10.5 When performing roofing work on low-pitched roofs (slope of 4 in 12 or less), employees working within 6 feet of an unprotected edge are protected by a guardrail system, combination of a warning line with a safety monitor, or PFAS.

5.11 Alternatives to Fall Protection Systems

5.11.1 When conventional fall protection systems are infeasible or create a greater hazard, a Fall Protection Plan is developed and alternative fall protection systems (such as warning-line systems or controlled access zones) are used.

5.11.2 When a Fall Protection Plan is written where "conventional fall protection" is not feasible and/or creates a greater hazard, the plan must be approved by the Construction Manager and/or Facility Manager.

5.12 Safety Monitoring Systems

NOTE: *Safety monitors may only be used for employees engaged in roofing work and will be documented in the JSA. The JSA will need concurrence of the manager directing the work..*

5.12.1 Safety monitoring systems are used to establish a controlled access zone to limit access to authorized workers as follows:

- Mark and barricade the control access zone with a warning line no closer than 6 feet where feasible, but no closer than 6 feet to an unprotected edge.
- Mark the controlled access zone by placing a warning line 34 to 39 inches high, mark with a high visibility tape every 6 feet, supported at 6 feet intervals, resistant to tipover, and secured at each support.
- Do not allow the warning line to be strung near the unprotected edge except at an access point such as a ladder.
- No employee is allowed to enter the area between the warning line and the roof's edge, unless the employee is performing work in that area and is closely observed. Employees working in the area between the warning line and the roof edge are distinguished from other members of the work crew by wearing highly visible/distinctive apparel. This apparel is only worn when working in this area.

5.12.2 Safety monitors are designated as Qualified Persons according to MSC-PRAC-30452, *Program General Requirements*.

5.12.3 Assigned safety monitors:

- Are physically located on the same level as the workers.
- Are located close enough to the workers to watch the work and provide verbal warnings to them about a fall hazard or an unsafe act.
- Are distinguishable from other workers by wearing vests, other clothing, or different-colored hardhats.

- Can monitor 8 workers or fewer.
- Have no other assignment except to observe the workers and their activity.
- Shall be able to keep visual contact with all exposed employees at the same time.

5.13 Warning Lines

5.13.1 A warning-line system (WLS) consists of a rope, wire rope, cable or chain with supporting posts, visibly marked every 6 feet – erected no less than 34 inches in height, with the highest point being no greater than 39 inches above the walking/working surface – and not less than 6 feet from the roof's edge. The warning line and posts are capable of resisting, without tipping over, at least 16 pounds force applied horizontally against the post.

5.13.2 Attach the warning line at each post in such a way that pulling on the line between posts does not result in the line going slack in an adjacent section.

5.13.3 Connect points of access, material handling areas, and hoisting areas to the work area by an access path that is formed by 2 warning lines.

5.13.4 Do NOT allow any employee to enter the area between the warning line and the roof's edge, unless the employee is performing work in that area and is closely observed. Employees working in the area between the warning line and the roof edge are distinguished from other members of the work crew by wearing highly visible/distinctive apparel. Wear this apparel only when working in this area.

5.13.5 WLS are used for roofing work, on Low-sloped roofs (less than 50-feet in width), with an unprotected edge/side, at or above six feet from the next level.

5.14 Protection from Falling Objects

5.14.1 Employees are protected from objects falling from overhead work by wearing hard hats and using one of the following measures:

- Barricade off the area.
- Use toeboards, screens, or mesh on the guardrail system to keep small or unstable materials from falling to the lower work surface.
- Erect canopies over the hazard areas that are capable of withstanding the force of any material that might fall, and set material back from the edge.
- Keep tools and equipment secured or in buckets/pouches.

5.15 Holes

5.15.1 All employees shall be protected from stepping or falling into or through holes and floor openings (12" in any dimension) more than six feet above a lower level.

5.15.2 All "hole" covers shall be marked **DANGER – HOLE OR COVER**, and shall be secured to prevent movement.

5.16 Equipment Inspection and Testing

5.16.1 Pre-use and periodic inspections of fall protection equipment are performed in accordance with Appendix D and Appendix E.

5.16.2 Employees shall inspect all PFAS/PFRS prior to donning. For example, inspection should include excessive wear, damage, deterioration, or other defects.

5.16.3 A Competent Person inspects all PFAS/PFRS (i.e., safety harnesses, lanyards, and attachment slings and devices) monthly in accordance with manufacturer's recommendations

Maintain a record of PFAS/PFRS (i.e., safety harnesses, lanyards, and attachment slings and devices) monthly inspections

5.16.4 Remove from service any harness found to be defective, whether from the employee's or the Competent Person's inspection, and tag as "Out of Service" until it is destroyed or repaired.

5.16.5 Immediately remove from service and destroy any harness or lanyard submitted to an actual load condition. Do not use harnesses for longer than ten (10) years from date of manufacture.

5.17 Training

5.17.1 A Competent Person trains employees who might be exposed to fall hazards to this practice (refer to practice MSC-PRAC-30452, *Program General Requirements* for Competent Person designation). Training is documented according to practice MSC-PRAC-30461, *Accident Prevention Training and Education*.

Training includes (at least) the following topics:

- General requirements of this practice
- Recognition of fall hazards
- Nature of fall hazards
- Correct procedures for erecting, maintaining, disassembling and inspecting the fall protection systems to be used
- Use and operations of guardrail systems, PFAS, safety net systems, warning-line systems, safety monitoring systems, controlled access zones, and other protection used
- Proper anchoring and attachment techniques
- Limitations on use of mechanical equipment during work on low-sloped roofs
- Correct procedures for handling and storage of equipment and materials, and the erection of overhead protection
- Role of employees in fall protection plans
- Rescue considerations
- Role of each employee in safety monitoring system (when in use)

6.0 FORMS

Fall Protection Work Plan, A-6004-286
Prejob Safety Planning Signoff A-6004-285
Fall Protection Permit for Portable Ladders

7.0 RECORDS IDENTIFICATION

Records and forms generated during the performance of these activities are to be included in the Construction Field Files in accordance with MSC-PRO-14990, *Construction Management*.

Subcontractor records and forms generated during the performance of these activities are to be included in the Construction Field Files and will be managed in accordance with their contract.

Records Capture Table

Name of Document	Submittal Responsibility	Retention Responsibility
Fall Protection Work Plan, A-6004-286	Construction Engineer	Construction Document Control
Prejob Safety Planning Signoff A-6004-285	Supervisor	Project Files
Fall Protection Permit for Portable Ladders (A-6003-949)	Supervisor	Project Files
PFAS/PFRS Monthly inspections	Supervisor	Project Files

8.0 REFERENCES

29 CFR 1926.502, *Fall Protection Systems Criteria and Practices*

MSC-PRAC-30452, *Program General Requirements*
MSC-PRAC-30461, *Accident Prevention Training and Education*
MSC-PRAC-30462, *Prejob Safety Planning*
MSC-PRAC-30477, *Hoisting and Rigging*

9.0 APPENDICES

Appendix A, *Fall Protection Documentation Requirements*
Appendix B, *Engineering Controls*
Appendix C, Typical Anchorage Points
Appendix D, *Personal Fall Protection Equipment Inspection by Users*
Appendix E, *Periodic Inspections by Competent Persons*
Appendix F, *Glossary*

Appendix A

Fall Protection Documentation Requirements

An approved procedure, a Fall Protection Work Plan A-6004-286 , or a job safety analysis (JSA) is required to identify the fall hazards and the controls used to minimize the risk of injury from those hazards. A Fall Protection Work Plan is required when using safety monitor, warning-line systems, and/or when conventional forms of fall protection are not feasible or create a greater hazard. One of these documents is completed for employees using PFAS while working on walking/working surfaces where guardrail systems do not exist for heights 6 feet or more above a lower work surface. The priority of controls for protecting workers is as follows: (1) guardrail system, (2) powered manlifts, (3) scaffolds or other access means, and (4) alternate fall protection systems.

NOTE: *Risk must be balanced in applying this program. For example, if installing a guardrail system or erecting a scaffold is a higher risk and the job is a short-duration job for which a ladder can be used safely, then a ladder may be an acceptable control. Otherwise, more stringent controls are necessary. Contact Safety and Health for guidance on any question about fall protection.*

The approved document addresses the concerns and includes the appropriate controls as indicated below:

1. Identifies all fall hazards in the work area (including hazards of falling or materials falling onto employees).[1,2]

2. Describes the method to be used for fall arrest or fall restraint.[1,2]

3. Describes the method of providing overhead protection for workers who may be in, or pass through, the area below the worksite.[1,2]

4. Unless the anchorage is one of the acceptable anchorages listed in Attachment 02, approval of the anchorage(s) by a Qualified Person is annotated/described.[1,2]

5. Describes the method for assembly, maintenance, inspection, and disassembly of the fall protection systems.[1]

6. Describes the method for handling, storage, and securing of tools and materials.[1]

7. Describes the method for prompt, safe removal of injured workers.[1]

8. Describes the method for keeping the training records readily available.[1]

9. Identifies the employee(s) working at/near a "leading edge." [1]

10. If a safety monitory system is used, identifies the safety monitor(s).[1]

11. Justification for selecting an alternate fall protection system (controlled access zone and safety monitors) if conventional systems of guardrails, safety nets, or personal fall arrest systems (PFAS) are not used.[1]

12. Employees review the Fall Protection Work Plan or JSA for the specific task to be performed prior to performing the work activity. The review is documented by employee signature on the *Prejob Safety Planning Signoff*, A-6004-285 for each Fall Protection Work Plan, or in accordance with practice MSC-PRAC-30462, *Prejob Safety Planning*.

[1] Required for a Fall Protection Work Plan.

[2] Required for a JSA or approved procedure.

Appendix B

Engineering Controls

Positive fall protection should be an integral part of a new project or extensive modification of an existing facility. Positive fall protection should be included during construction, operation, and maintenance of the finished project. Employers should anticipate the need to work at heights and plan their work activities accordingly.

1. Roof-mounted equipment is not located within 15 feet of an unprotected edge. Such location allows for a working space 9 feet and a 6-foot clearance from the edge.

NOTE: *Equipment closer than* 15 feet *to the edge requires a guardrail system with the rails running 6-foot beyond the edges of the equipment parallel to the roof edge. The design of the access and railing must allow the worker to approach and work on the equipment without getting any closer than 6 feet to an unprotected edge.*

2. Elevated work during construction requires a positive means of fall protection.

NOTE: *Many employers minimize exposure to fall hazards by having anchorage points for personal fall arrest system (PFAS) fabricated or designed into structural members and by installing perimeter lines on structural members before those members are lifted into position.*

3. Roofs with ladder access have a guardrail extending 6 feet on each side of the ladder.

Appendix C

Typical Anchorage Points

1. **Crane Hook**:

   Configured for at least 5,000 pounds and locked and tagged out during PFAS use.

2. **Structural:**

   As described in the tables below, the following typical structural members, of the minimum size indicated or larger, may be used for fall arrest anchorage for one person with the following conditions:

   - The anchorages selected are primary structural members. Exclude lateral supports and bracings as anchorages.

   - The entire section must be fully engaged by the anchor arrest attachment, (such as a web/sling that goes over the beam or a beam clamp that centers the load on the center of rotation of the beam). The attachment cannot add a twisting moment to the member.

   - The end connectors develop the shear strength capable of withstanding the 5,000 pound load. A minimum end connection for the member is 2 inches of ¼-inch fillet weld or two 5/8-inch diameter bolts.

   - Because of potential failure from compression flange buckling, laterally unsupported beam spans are limited to 10 feet or less. Span is the length of the member between supported ends. For spans greater than 10 feet, the system must have lateral support. The support is the same size member as the structural member, is perpendicular to the direction of the structural member, and located at either the mid-span or at one-third increments along the length of the span. Other configurations, such as smaller members spaced at smaller increments, may qualify but should be verified by a structural engineer.

3. Where these supports are not available, a structural engineer should be consulted to recommend appropriate fall arrest anchorage locations.

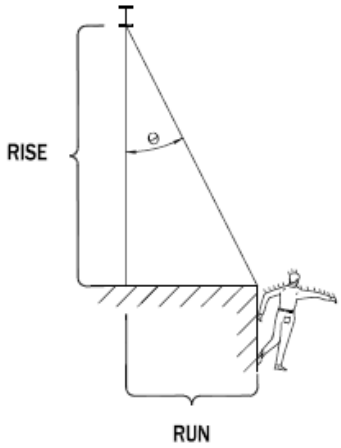

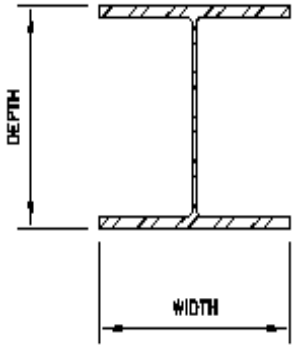

5000 LB CONCENTRATED LOAD ANCHORAGE FOR FALL ARREST EQUIPMENT

Max Span = 5 ft				Max Span = 10 ft				Max Span = 20 ft			
Tabulated Rise/Run	Depth	Width	Shape	Tabulated Rise/Run	Depth	Width	Shape	Tabulated Rise/Run	Depth	Width	Shape
No run	6	6	W6x15	No run	8	5.25	W8x18	No run	10	8	W10x33
(Vertical)	8	4	W8x10	(Vertical)	10	5.75	W10x22	(Vertical)	12	6.5	W12x26
	10	4	W10x12		12	6.5	W12x26		14	6.75	W14x30
	12	4	W12x14		14	5	W14x22		16	5.5	W16x26
	14	5	W14x22		16	5.5	W16x26		18	6	W18x35
	16	5.5	W16x26		18	6	W18x35		21	6.5	W21x44
6	6	6	W6x15	6	8	6.5	W8x24		24	7	W24x55
4	8	5.25	W8x18		16	5.5	W16x26	6	16	7	W16x36
2.5	14	5	W14x22	4	12	6.5	W12x26	6	21	6.5	W21x44
				3	14	6.75	W14x30	4	12	8	W12x40
2	10	5.75	W10x22		18	6	W18x35	4	24	7	W24x55
	16	5.5	W16x26	2	16	7	W16x36	4	14	8	W14x43
1	8	6.5	W8x24	1.5	10	8	W10x33	3	18	7.5	W18x50
	10	8	W10x33	1	12	8	W12x40	2	21	8.25	W21x62
	12	6.5	W12x26		14	8	W14x43	1.5	12	10	W12x53
	14	6.75	W14x30		16	10	W16x67	1.5	24	9	W24x68
	16	7	W16x36		18	7.5	W18x50	1	14	10	W14x61
									16	10	W16x67
									18	11	W18x76
									21	12.3	W21x101
									24	12.8	W24x104

3000 LB CONCENTRATED LOAD
ANCHORAGE FOR FALL RESTRAINT EQUIPMENT

Max Span = 5 ft				Max Span = 10 ft				Max Span = 20 ft			
Tabulated Rise/Run	Depth	Width	Shape	Tabulated Rise/Run	Depth	Width	Shape	Tabulated Rise/Run	Depth	Width	Shape
No run	4	4	W4x13	No run	5	5	W5x16	No run	8	6.5	W8x24
(Vertical)	5	5	W5x16	(Vertical)	6	6	W6x15	(Vertical)	10	5.75	W10x22
	6	4	W6x9		8	5.25	W8x18		12	6.5	W12x26
	8	4	W8x10		10	5.75	W10x22		14	5	W14x22
	10	4	W10x12		12	6.5	W12x26		16	5.5	W16x26
	12	4	W12x14		14	5	W14x22		18	6	W18x35
	14	5	W14x22		16	5.5	W16x26		21	6.5	W21x44
	16	5.5	W16x26		18	6	W18x35		24	7	W24x55
5	10	4	W10x12	5	8	5.25	W8x18	5	12	6.5	W12x26
4	12	4	W12x14	4	14	5	W14x22	4	14	6.75	W14x30
				2.5	10	5.75	W10x22	4	18	6	W18x35
					16	5.5	W16x26	2.5	16	7	W16x36
2	5	5	W5x16	1.5	8	6.5	W8x24		21	6.5	W21x44
1.5	6	6	W6x15	1.5	12	6.5	W12x26	2.5	10	8	W10x33
				1.5	18	6	W18x35	2	24	7	W24x55
1	8	5.25	W8x18	1	10	8	W10x33	1.5	12	8	W12x40
	10	5.75	W10x22		12	8	W12x40	1.5	14	8	W14x43
	12	6.5	W12x26		14	6.75	W14x30	1.5	18	7.5	W18x50
	14	5	W14x22		16	7	W16x36	1	12	10	W12x53
	16	5.5	W16x26		18	7.5	W18x50		14	10	W14x61
									16	10	W16x67
									18	11	W18x76
									21	8.25	W21x62
									24	9	W24x68

Appendix D

Personal Fall Protection Equipment Inspection by Users

1. Inspect fall protection equipment before each use. Ensure that a periodic inspection has been performed and documented in accordance with Appendix E. Any equipment found to have missed a required, periodic inspection is tagged "Danger – DO NOT USE" and returned for inspection and tagging in accordance with Appendix E.

2. Use the following examples to help identify potential defects in fall protection equipment:

   - The hole in the D-ring is not round or the D-ring has been twisted.
   - A buckle is stretched so the tongue does not reach the buckle.
   - Threads are coming loose in any part of the webbing or lanyard (stitching around the connectors, such as buckles or D-rings, show wear or damage).
   - The snap hook keeper does not close against the hook.
   - Snap hooks are not double-locking (a double-locking snap hook requires the user to push a button or pull on a latch or trigger before the gate can be opened or the lock operated).
   - Harness or lanyard webbing is significantly stained or stiff compared to the rest of the harness.
   - Harness or lanyard webbing shows evidence of burns or extreme heat.
   - The manufacturer's label is missing.
   - Equipment shows signs of being stretched. For example, holes are elongated in the webbing used to adjust length of straps that go around the thigh.
   - Any part of the system shows evidence of having been cut off.
   - Connectors have sharp edges or nicks that could damage other parts of the system.
   - The cable in a self-retracting lifeline does not retract smoothly or the braking system does not activate when the line is pulled quickly.
   - The retracting lifeline shows evidence of damage (such as cuts, twists, or worn or broken strands).

- The self-retracting lifeline makes unusual noises, such as grinding or rubbing sounds, or feels as if there is grit inside the system.

- A user reports any concern with the equipment.

3. If the equipment has a defect, it is tagged out-of-service and withdrawn from use immediately.

4. To ensure good working condition of the personal fall arrest system (PFAS), the equipment is stored in an area that is clean and dry, and free from moisture, chemicals, and direct sun light.

Appendix E

Periodic Inspections by Competent Persons

1. Visual inspections are performed in accordance with manufacturer's requirements on **all** safety belts, harnesses, lifelines, and lanyards. Inspections are made by a competent person who examines for general condition and damage by cuts, abrasions, and burns. The competent person ensures that the following fall protection equipment components, at minimum, are inspected:

- ☐ Stitching
- ☐ D-Rings
- ☐ Deterioration (such as excessive wear or damage)
- ☐ Frayed or broken fabric/leather
- ☐ Lanyard
- ☐ Buckles (include tongue)
- ☐ Splices
- ☐ Acid and burn damage
- ☐ Metal rivets
- ☐ Hook safety latch
- ☐ Body pad (if applicable)
- ☐ General condition
- ☐ Certification or data tag
- ☐ Other (as required by manufacturer)

NOTE: *None of the items listed above are to be altered in any way. During inspections, look for additional holes punched in tongue, excessive tongue cut off, and parts of D-Ring or belts altered or removed.*

2. Document the inspection in accordance with manufacturer's requirements/inspections.

3. Equipment or component(s) found to be defective or altered shall be removed from service and destroyed or identified in such a manner as to prohibit their use in employee safeguarding.

Appendix F

Glossary

WORD/TERM	DEFINITION
Anchorage	A secure point of attachment for lifelines, lanyards or deceleration devices
Competent/Qualified Person	An employee capable of identifying existing and predictable hazards in the work area (or job/task), which are hazardous or dangerous imposing risk to employees, and has the authority and responsibility to take prompt corrective actions.
Connector	A device used to couple (connect) parts of a personal fall arrest system (PFAS) and positioning devices systems (PDS) together. Connectors may be an independent component (e.g., carabiner) or an integral component of the system (e.g., buckle, D-Ring, snap-hook) sewn into the body harness, lanyard or self-retracting lanyard.
Controlled Access Zone (CAZ)	An area in which certain work activities may take place without the use of fall protective systems.
Deceleration Device	Any mechanism (e.g., rope grab, rip-stitch lanyard, self-retracting lanyard, etc.) which serves to dissipate a substantial amount of energy during a fall arrest, (i.e., limiting the amount of energy imposed on an employee).
Deceleration Distance	The additional vertical distance a falling employee travels, excluding lifeline elongation and free fall distance, before stopping, from the point at which the deceleration device begins to operate. It is measured as the distance between the location of an employee's body belt or body harness attachment point at the moment of activation (at the onset of fall arrest forces) of the deceleration device during a fall, and the location of that attachment point after the employee comes to a full stop.
Free Fall	The act of falling before a PFAS begins to apply force to arrest the fall.
Free Fall Distance	The vertical displacement of the fall arrest attachment point on the employee's body harness between onset of the fall and just before the system begins to apply force to arrest the fall. This distance excludes deceleration distance, and lifeline/lanyard elongation, but includes any deceleration device slide distance or self-retracting lifeline/lanyard extension before they operate and fall arrest forces occur.

Full-Body Harness	A device with straps which may be secured about an employee in a manner that will distribute the fall arrest forces over at least the thighs, pelvis, waist, chest and shoulders with means for attaching it to other components of a personal fall arrest system.
Guardrail System	A barrier erected to prevent employees from falling to lower levels.
Hole	A gap or void (twelve inches or more) in its least dimension in a floor, roof or other walking/working surface.
Lanyard	A flexible line of rope, wire rope or strap which has a connector at each end for connecting the body harnesses to a deceleration device, lifeline, or anchorage point.
Leading Edge	The edge of a floor, roof, or formwork for a floor or other walking/working surface (such as the deck) which changes location as additional floor, roof, decking, or formwork sections are placed, formed, or constructed. A leading edge is considered to be an "unprotected side and edge" during periods when it is not actively and continuously under construction.
Lifeline	A flexible line for connection to an anchorage point at one end to hang vertically (vertical lifeline), or for connection to anchorage points at both ends to stretch horizontally (horizontal lifeline), and which serves as a means for connecting other components of a personal fall arrest system to the anchorage.
Lower Levels	An area or surface, to which an employee can fall and incur injury (e.g., ground, floor, platform, ramp, runway, excavation, pit, tank, hazardous material, water, equipment, or other structures.)
Personal Fall Arrest System	A system used to arrest an employee in a fall from a working level. It consists of anchorage point(s), connectors, full-body harness, and may include any of the following: lanyard, deceleration device, lifeline, or suitable combination of these.
Safety-monitoring System	An establish safety system warning employees of known or potential fall hazards. A Competent Person is responsible for recognizing and warning employees of the potential conditions.
Self - Retracting Lifeline/Lanyard	A deceleration device which, after the onset of a fall, automatically locks the drum and arrests an employee's fall. A deceleration device normally contains a drum-wound line which can be slowly extracted from, or retracted onto, the drum under slight tension during normal employee movement.

Snap-Hook	A connector comprised of a hook-shaped member with a closed keeper, which may be opened to permit hook attachment and will self-close once released.
Unprotected Sides/Edge	Any side or edge (except at entrance or exit points) of a walking/working surface where there is no wall or guardrail system at least 39 (thirty-nine) inches high.
Warning Line System	A barrier erected, on a roof, to warn employees that they are approaching an unprotected side or edge, and designates an area in which roofing work may take place without the use of fall protection.
Work Area	An area where construction work activities are being performed (i.e., walking/working surface or work space).