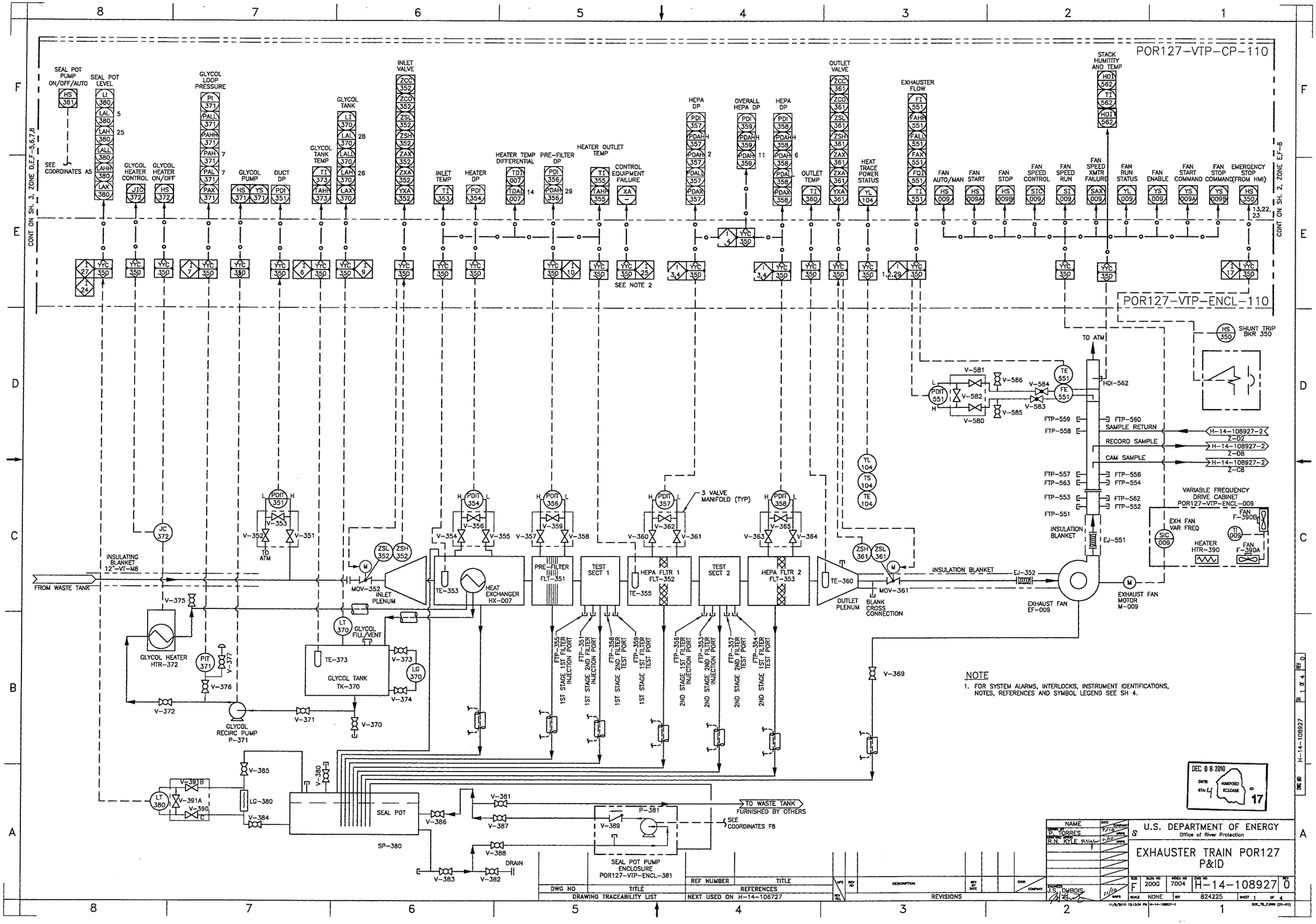
POR127-VTP-CP-110
POR127-VTP-ENCL-110
SEAL POT PUMP ON/OFF/AUTO
SEAL POT LEVEL
GLYCOL HEATER CONTROL
GLYCOL HEATER ON/OFF
GLYCOL LOOP PRESSURE
GLYCOL PUMP
DUCT DP
GLYCOL TANK TEMP
GLYCOL TANK
INLET VALVE
INLET TEMP
HEATER DP
HEATER TEMP DIFFERENTIAL
PRE-FILTER DP
HEATER OUTLET TEMP
CONTROL EQUIPMENT FAILURE
HEPA DP
OVERALL HEPA DP
OUTLET VALVE
OUTLET TEMP
HEAT TRACE POWER STATUS
EXHAUSTER FLOW
STACK HUMITITY AND TEMP
FAN AUTO/MAN
FAN START
FAN STOP
FAN SPEED CONTROL
FAN SPEED RUN
FAN SPEED XMTR FAILURE
FAN RUN STATUS
FAN ENABLE
FAN START COMMAND
FAN STOP COMMAND
EMERGENCY STOP (FROM HMI)
SEE COORDINATES A5
CONT ON SH. 3, ZONE D,E,F-5,6,7,8
CONT ON SH. 2, ZONE E,F-8
SEE NOTE 2
SHUNT TRIP BKR 350
TO ATM
FTP-559
FTP-558
FTP-560
SAMPLE RETURN
RECORD SAMPLE
CAM SAMPLE
H-14-108927-2 Z-D2
H-14-108927-2 Z-D8
H-14-108927-2 Z-C8
FTP-557
FTP-563
FTP-553
FTP-551
FTP-556
FTP-554
FTP-562
FTP-552
VARIABLE FREQUENCY DRIVE CABINET POR127-VTP-ENCL-009
EXH FAN VAR FREQ
HEATER HTR-390
FAN F-390B
FAN F-390A
INSULATION BLANKET
EJ-551
EJ-352
INSULATION BLANKET
EXHAUST FAN EF-009
EXHAUST FAN MOTOR M-009
3 VALVE MANIFOLD (TYP)
FROM WASTE TANK
INSULATING BLANKET 12"-VT-M8
MOV-352 INLET PLENUM
HEAT EXCHANGER HX-007
PRE-FILTER FLT-351
TEST SECT 1
HEPA FLTR 1 FLT-352
TEST SECT 2
HEPA FLTR 2 FLT-353
OUTLET PLENUM
BLANK CROSS CONNECTION
MOV-361
GLYCOL HEATER HTR-372
GLYCOL FILL/VENT
GLYCOL TANK TK-370
GLYCOL RECIRC PUMP P-371
SEAL POT
SP-380
SEAL POT PUMP ENCLOSURE POR127-VTP-ENCL-381
TO WASTE TANK FURNISHED BY OTHERS
SEE COORDINATES F8
DRAIN
1ST STAGE 1ST FILTER INJECTION PORT
1ST STAGE 2ND FILTER INJECTION PORT
1ST STAGE 2ND FILTER TEST PORT
1ST STAGE 1ST FILTER TEST PORT
2ND STAGE 1ST FILTER INJECTION PORT
2ND STAGE 2ND FILTER INJECTION PORT
2ND STAGE 2ND FILTER TEST PORT
2ND STAGE 1ST FILTER TEST PORT
NOTE
1. FOR SYSTEM ALARMS, INTERLOCKS, INSTRUMENT IDENTIFICATIONS, NOTES, REFERENCES AND SYMBOL LEGEND SEE SH 4.
DEC 08 2010
HANFORD RELEASE
17
U.S. DEPARTMENT OF ENERGY
Office of River Protection
EXHAUSTER TRAIN POR127 P&ID
J. TORRES
R.N. KYLE
J.S. DUBOIS
200G
7004
H-14-108927
0
NONE
824225
DWG NO
TITLE
DRAWING TRACEABILITY LIST
REFERENCES
NEXT USED ON H-14-106727
REF NUMBER
REVISIONS
DESCRIPTION

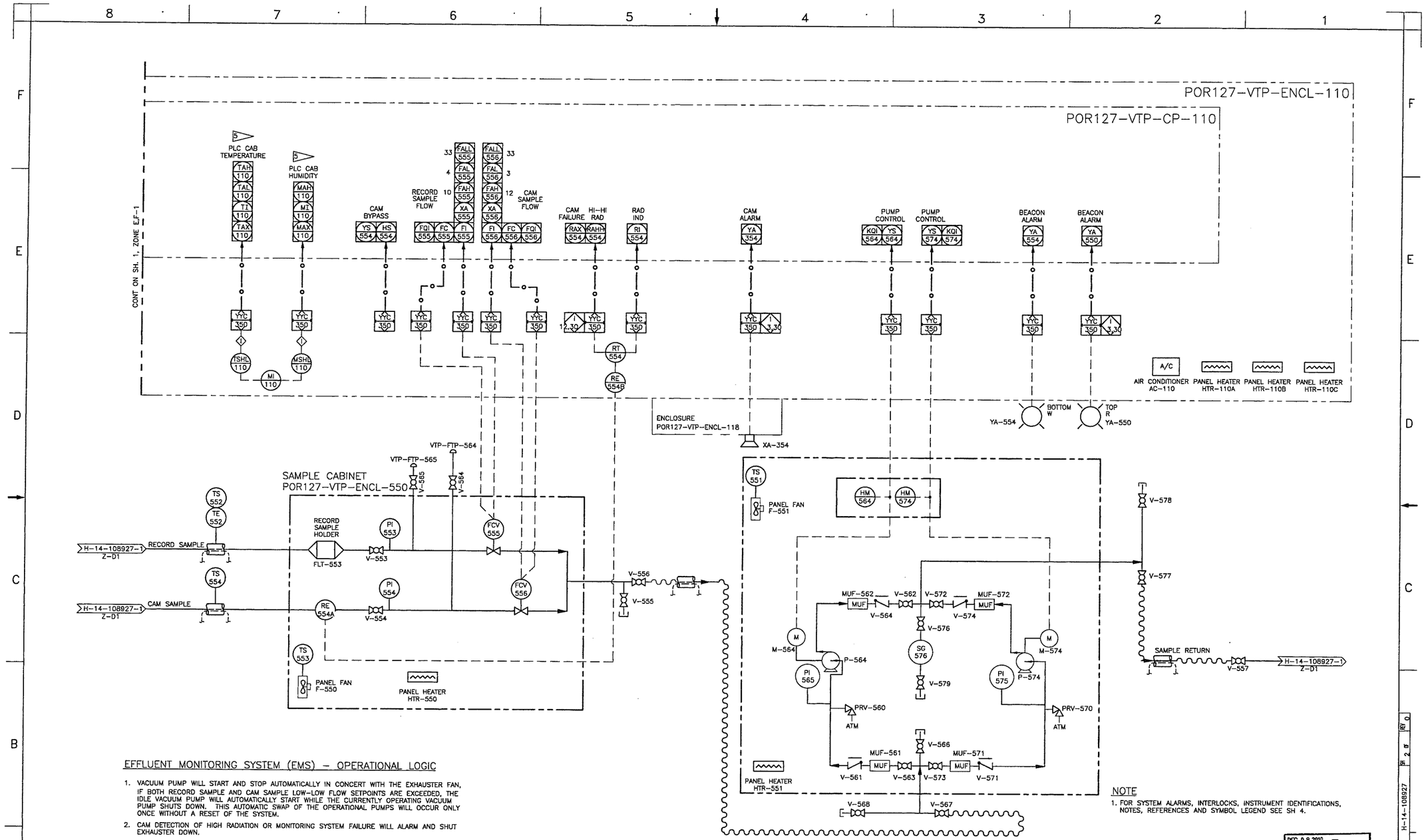

EFFLUENT MONITORING SYSTEM (EMS) – OPERATIONAL LOGIC

1. VACUUM PUMP WILL START AND STOP AUTOMATICALLY IN CONCERT WITH THE EXHAUSTER FAN, IF BOTH RECORD SAMPLE AND CAM SAMPLE LOW-LOW FLOW SETPOINTS ARE EXCEEDED, THE IDLE VACUUM PUMP WILL AUTOMATICALLY START WHILE THE CURRENTLY OPERATING VACUUM PUMP SHUTS DOWN. THIS AUTOMATIC SWAP OF THE OPERATIONAL PUMPS WILL OCCUR ONLY ONCE WITHOUT A RESET OF THE SYSTEM.
2. CAM DETECTION OF HIGH RADIATION OR MONITORING SYSTEM FAILURE WILL ALARM AND SHUT EXHAUSTER DOWN.
3. CAM BYPASS OVERRIDES THE HIGH BETA AND CAM FAILURE ALARMS. ALL OTHER ALARMS WILL OVERRIDE THE CAM BYPASS FUNCTION AND OPERATE NORMALLY DURING THE BYPASS.
4. THE FOLLOWING VALUES WILL BE DISPLAYED ON HMI DURING BYPASS:

   STACK FLOW (SCFM),
   STACK TOTAL (CF),
   RECORD SAMPLER FLOW (SCFM),
   RECORD TOTAL (CF),
   CAM SAMPLE FLOW (SCFM),
   CAM TOTAL (CF)

5. PLC CABINET HUMIDITY/TEMPERATURE SWITCHES JUMPERED FOR POWER TO RECEPTACLE.

NOTE

1. FOR SYSTEM ALARMS, INTERLOCKS, INSTRUMENT IDENTIFICATIONS, NOTES, REFERENCES AND SYMBOL LEGEND SEE SH 4.

DEC 08 2010 DATE: STA: 4 HANFORD RELEASE ID: 17

DWG NO	TITLE	REF NUMBER	TITLE
DRAWING TRACEABILITY LIST		REFERENCES	
		NEXT USED ON SHEET 1	

REVISIONS

NAME
DRAWN BY P. TORRES 7/10
DRAFTING APPROV R.N. KYLE 11/10
ENGINEER J.S. DUBOIS 11/10

U.S. DEPARTMENT OF ENERGY
Office of River Protection

EXHAUSTER TRAIN POR127
P&ID

SIZE F | BLDG NO 200G | INDEX NO 7004 | DWG NO H-14-108927 | REV 0
SCALE NONE | EDT 824225 | SHEET 2 OF

11/4/2010 12:06:54 PM H-14-108927-2 DOE_TR_F.DWG (01-01)

DWG NO H-14-108927 SH 2 OF REV 0

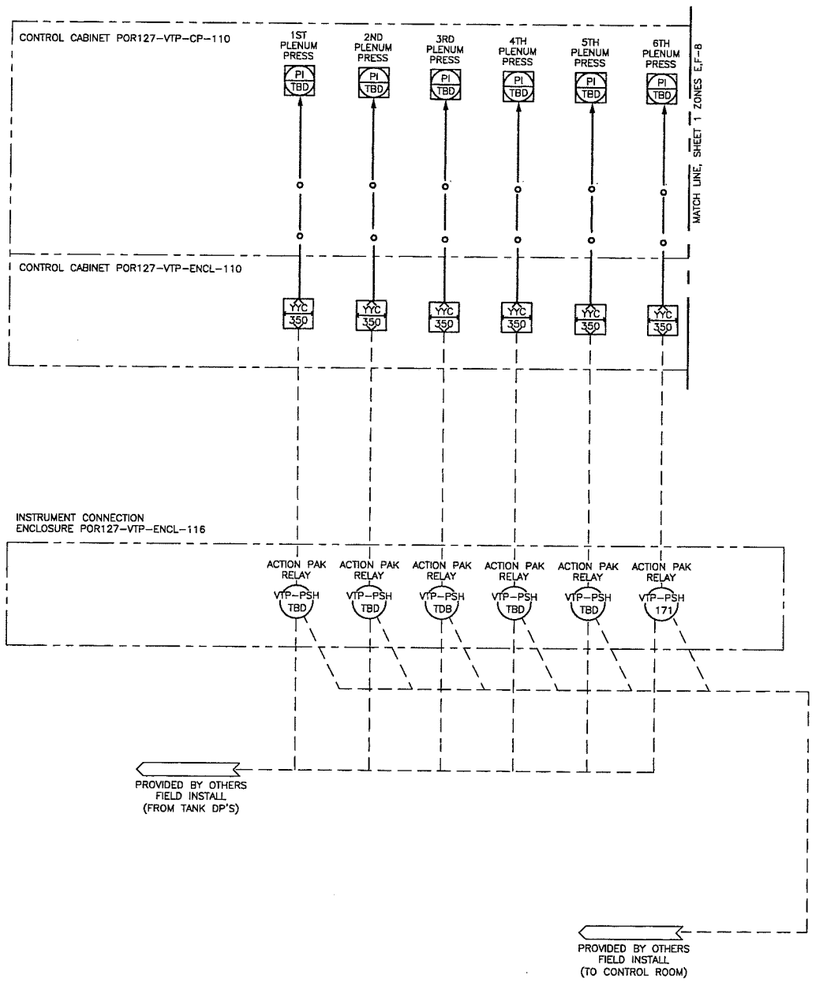

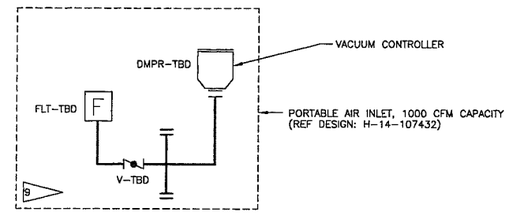

TYPICAL VACUUM CONTROLLER

GENERAL NOTES: (UNLESS OTHERWISE SPECIFIED)

1. SEE H-14-102610 FOR SINGLE AND DOUBLE TANK APPLICATIONS INVOLVING INLET PLENUM CONTROL INSTRUMENTATION.
2. REFERENCE FUNCTIONAL REQUIREMENTS RPP-SPEC-47870, "FUNCTIONAL REQUIREMENTS AND TECHNICAL DESIGN CRITERIA FOR THE PORTABLE EXHAUSTER RETRIEVAL VENTILATION SYSTEM"
3. VENDOR INFORMATION FILE IS VI #50024.
4. ALL EQUIPMENT NUMBERS/LABELS ARE AS FOLLOWS:

POR127-VTP-***-***

PORTABLE

VENTILATION TANK PRIMARY

COMPONENT NUMBER (EXAMPLE 001, 101, ETC.)

COMPONENT I.D. (EXAMPLE "DS") = DISCONNECT SWITCH

5. SEE H-14-020000 FOR STD SYMBOL LEGEND, DWG NUMBER IDENTIFICATION AND EQUIPMENT IDENTIFICATION.
6. EXHAUSTER CONTROL CONFIGURATION TO BE DETERMINED BY SYSTEM ENGINEER FOR EACH APPLICATION.
7. PLENUM PRESSURE PDT-TBD LOCATED AT C-XXX RISER X RANGE +1" TO -3" WC, FOR TANK EXHAUST USE ONLY.
8. * INDICATES CURRENTLY INACTIVE.
9. DETAIL FOR CURRENT OR FUTURE FIELD INSTALLATION.

DEC 0 8 2010 DATE STA: 4 HANFORD RELEASE ID: 17

DWG NO	TITLE	REF NUMBER	TITLE
DRAWING TRACEABILITY LIST		REFERENCES	
		NEXT USED ON SHEET 1	

REVISIONS

NAME	DATE	COMPANY
DRAWN BY P. TORRES	07/10	WRPS
CHECKED BY R.N. KYLE	11/10	WRPS
DESIGN AUTHORITY J.S. DUBOIS	11-14	WRPS

U.S. DEPARTMENT OF ENERGY
Office of River Protection

EXHAUSTER TRAIN POR127
P&ID

SIZE	BLDG NO	INDEX NO	DWG NO	REV
F	200G	7004	H-14-108927	0

SCALE NONE | EDF 824225 | SHEET 3 OF

11/22/2010 8:41:54 AM H-14-108927-3 DOE_TB_7.DWG (01-01)

DWG NO H-14-108927 SH 3 OF REV 0

INSTRUMENT IDENTIFICATION (SEE GENERAL NOTE 1)

VTP-V-XXX
- VTP — SYSTEM DESIGNATOR (i.e. VENTILATION TANK PRIMARY)
- V — EQUIPMENT IDENTIFICATION (V=VALVE)
- XXX — VALVE IDENTIFICATION NUMBER

AC	AIR CONDITION UNIT
BKR	BREAKER
DE	DE-ENTRAINER
EF	EXHAUST FAN
EJ	EXPANSION JOINT
F	FAN
FAH	FLOW ALARM HIGH
FAHH	FLOW ALARM HIGH HIGH
FAL	FLOW ALARM LOW
FALL	FLOW ALARM LOW LOW
FAX	FLOW ALARM FAILURE
FC	FLOW CONTROLLER
FCV	FLOW CONTROL VALVE
FE	FLOW ELEMENT
FI	FLOW INDICATOR
FLT	FILTER
FQI	TOTALIZER FLOW INDICATOR
FTP	FLOW TEST PORT
HDI	HUMITITY DETECTOR INDICATOR
HDIT	HUMITITY DETECTOR INDICATOR TRANSMITTER
HM	HOUR METER
HS	HAND SWITCH (2 POSITION)
HTR	HEATER
HX	HEAT EXCHANGER
JC	JUNCTION CONTROLLER
JIC	POWER INDICATING CONTROLLER
KQI	TIME INDICATOR
KS	KEYSWITCH
LAH	LEVEL ALARM HIGH
LAHH	LEVEL ALARM HIGH HIGH
LAL	LEVEL ALARM LOW
LALL	LEVEL ALARM LOW LOW
LAX	LEVEL ALARM FAILURE
LDE	LEAK DETECTOR ELEMENT
LE	LEVEL ELEMENT
LG	LEVEL GAUGE (LOCAL)
LI	LEVEL INDICATOR
LIT	LEVEL INDICATING TRANSMITTER
LT	LEVEL TRANSMITTER
M	MOTOR
MAH	MOISTURE ALARM HIGH
MI	MOISTURE INDICATOR
MOV	MOTOR OPERATED VALVE
MUF	MUFFLER
P	PUMP
PB	PUSH BUTTON
PDAH	PRESSURE DIFFERENTIAL ALARM HIGH
PDAHH	PRESSURE DIFFERENTIAL ALARM HIGH HIGH
PDAL	PRESSURE DIFFERENTIAL ALARM LOW
PDALL	PRESSURE DIFFERENTIAL ALARM LOW LOW
PDAX	PRESSURE DIFFERENTIAL ALARM FAILURE
PDI	PRESSURE DIFFERENTIAL INDICATOR
PDIT	PRESSURE DIFFERENTIAL INDICATING TRANSMITTER
PDK	PRESSURE DIFFERENTIAL SET POINT
PI	PRESSURE INDICATOR
PID	PHOTOIONIZATION INDICATOR DETECTOR
PIT	PRESSURE INDICATING TRANSMITTER
RAH	RADIATION ALARM HIGH
RAX	RADIATION ALARM FAILURE
RE	RADIATION SENSING ELEMENT
RI	RADIATION INDICATOR
RT	RADIATION TRANSMITTER
SG	SITE GLASS
SI	SPEED/VELOCITY INDICATOR
SIC	SPEED/VELOCITY INDICATING CONTROLLER
SP	SEAL POT
TAH	TEMPERATURE ALARM HIGH
TAHH	TEMPERATURE ALARM HIGH HIGH
TAL	TEMPERATURE ALARM LOW
TDAL	TEMPERATURE DIFFERENTIAL ALARM LOW
TE	TEMPERATURE ELEMENT
TI	TEMPERATURE INDICATOR
TK	TANK
TS	TEMPERATURE SWITCH
TSHL	TEMPERATURE SWITCH HIGH/LOW
V	VALVE
VT	VENTILATION DUCT
XA	FAILURE ALARM
YA	EVENT/STATE ALARM
YAX	EVENT ALARM FAILURE
YL	EVENT/STATE LIGHT
YS	EVENT/STATE SWITCH
YY	EVENT CONVERTER
YYC	PROGRAM CONTROLLER
ZCC	POSITION CONTROL CLOSED
ZCO	POSITION CONTROL OPEN
ZSH	POSITION SWITCH HIGH
ZSL	POSITION SWITCH LOW

INSTRUMENT INTERLOCKS (SEE NOTE 3)

- (SEE NOTE 11) I-1 – < 450 CFM, EXHAUSTER FLOW, ALARM LOW LOW, VENT SHUTDOWN
- I-2 – ≥ 2950 CFM, EXHAUSTER FLOW, ALARM HIGH HIGH, VENT SHUTDOWN
- (SEE NOTE 11) I-3 – < 0.2" WC, DP ACROSS HEPA, ALARM LOW LOW, VENT SHUTDOWN
- I-4 – ≥ 5.4" WC, DP ACROSS HEPA 1 AND OVERALL, ALARM HIGH HIGH, VENT SHUTDOWN
  – ≥ 2.7" WC, DP ACROSS HEPA 2, ALARM HIGH HIGH, VENT SHUTDOWN
- I-5 – NOT USED
- I-6 – ≥ 209°F GLYCOL TANK TEMP, ALARM HIGH HIGH, GLYCOL HEATER SHUTDOWN
- I-7 – < 3.0 PSI, GLYCOL PUMP PRESSURE, ALARM LOW LOW, GLYCOL SYSTEM SHUTDOWN
  – ≥ 28.0 PSI, GLYCOL PUMP PRESSURE, ALARM HIGH HIGH, GLYCOL SYSTEM SHUTDOWN
- I-8 – NOT USED
- I-9 – < 20% GLYCOL TANK LEVEL, ALARM LOW LOW, GLYCOL SYSTEM SHUTDOWN
- I-10 – ≥ 127°F AIRSTREAM TEMP, ALARM HIGH HIGH, GLYCOL HEATER SHUTDOWN
- I-11 – NOT USED
- (SEE NOTE 11) I-12 – EMS FAILURE, ALARM FAIL, VENT SHUTDOWN
- I-13 – NOT USED
- I-14 – NOT USED
- I-15 – NOT USED
- I-16 – < 85% RECORD SAMPLE FLOW RATE SETPOINT (SCFM)
  ALARM LOW-LOW < 1.8 SCFM, CAM SAMPLE FLOW
  ALARM LOW-LOW
- I-17 – REMOTE EMERGENCY SHUTDOWN, VENT SHUTDOWN
- I-18 – TANK PDITs FAIL, ALARM FAIL, VENT SHUTDOWN
- I-19 – < -5.9" WC, TANK PRESSURE, ALARM LOW LOW, VENT SHUTDOWN
- I-20 – NOT USED
- I-21 – NOT USED
- I-22 – NOT USED
- I-23 – NOT USED
- I-24 – ≥ 90% SKID SEAL POT LEVEL, ALARM HIGH HIGH, VENT SHUTDOWN
- I-25 – CONTROL EQUIPMENT FAILURE (SEE NOTE 6), ALARM FAIL, VENT SHUTDOWN
- I-26 – NOT USED
- I-27 – < 20% SKID SEAL POT LEVEL, ALARM LOW LOW, VENT SHUTDOWN
- I-28 – NOT USED
- I-29 – EXHAUST FLOW TRANSMITTER FAIL, VENT SHUTDOWN
- (SEE NOTE 11) I-30 – ≥ 300 DPM/FT RADIATION, CAM SLOW ALARM, VENT SHUTDOWN
  – ≥ 7000 DPM/FT RADIATION, CAM FAST ALARM, VENT SHUTDOWN
  – ≥ 3000 CPM RADIATION, CAM NCPM ALARM, VENT SHUTDOWN
- I-31 – NOT USED

SYSTEM ALARMS

1 – >_< -1.5" WC, TANK 1 PRESSURE, ALARM LOW
2 – > 4.5" WC, DP ACROSS HEPA 1, ALARM HIGH
3 – <_1.85 SCFM, CAM SAMPLE FLOW, ALARM LOW
4 – 1.8 SCFM RECORD SAMPLE FLOW RATE SETPOINT, ALARM LOW
5 – < 30% SKID SEAL POT LEVEL, ALARM LOW
6 – >_3.2" WC, DP ACROSS HEPA 2, ALARM HIGH
7 – >_25.0 PSI, GLYCOL PUMP PRESSURE, ALARM HIGH
  <_5.0 PSI, GLYCOL PUMP PRESSURE, ALARM LOW
8 – >122F AT HEPA INLET, ALARM HIGH
9 – < 4MA FROM CAM SAMPLE FCV, FAILED CAM ALARM
10 – 2.2 SCFM RECORD SAMPLE FLOW RATE SETPOINT, ALARM HIGH
11 – >_4.5" WC, DP ACROSS HEPA BANK, ALARM HIGH
12 – >_2.2 SCFM, CAM SAMPLE FLOW, ALARM HIGH
13 – EXHAUSTER NOT READY
14 – <_17°F, HEATER DIFF TEMPERATURE, ALARM LOW
15 – <4MA FROM SEAL POT TRANSMITTER, FAILED TRANSMITTER ALARM
16 – <4MA FROM FIRST HEPA FILTER TRANSMITTER, FAILED TRANSMITTER ALARM
17 – <4MA FROM SECOND HEPA FILTER TRANSMITTER, FAILED TRANSMITTER ALARM
18 – <4MA FROM STACK FLOW TRANSMITTER, FAILED TRANSMITTER ALARM
19 – >_-1" WC, TANK 1 PRESSURE, ALARM HIGH
20 – >_-0.2" WC, TANK 1 PRESSURIZATION, ALARM HIGH HIGH
21 – PLC I/O CARD(S) FAILED, FAILED PLC ALARM
22 – EXHAUSTER FAIL TO START
23 – EXHAUSTER FAIL TO SHUTDOWN
24 – <4MA FROM GLYCOL LEVEL TRANSMITTER, FAILED TRANSMITTER ALARM
25 – >_80% SKID SEAL POT LEVEL, ALARM HIGH
26 – >_80% GLYCOL LEVEL, ALARM HIGH
27 – <4MA FROM GLYCOL PUMP PRESSURE TRANSMITTER, FAILED TRANSMITTER ALARM
28 – <_40% GLYCOL LEVEL, LOW ALARM
29 – >_1.4" WC, DP ACROSS PRE-FILTER, ALARM HIGH
30 – CAM FLOW LO INTERLOC, RECORD FLOW LO INTERLOC, FAILED VACUUM PUMP ALARM
31 – <4MA FROM VFD, FAILED VFD ALARM
32 – CAM BYPASSED KEYLOCK ON FRONT DOOR IS SELECTED
33 – <_80% RECORD SAMPLE FLOW RATE SETPOINT (SCFM)
  ALARM LOW-LOW < 1.6 SCFM, CAM SAMPLE FLOW
  ALARM LOW-LOW
34 – <4MA FROM PRE-FILTER DP TRANSMITTER, FAILED TRANSMITTER ALARM
35 – MOV-352 FAILED TO OPEN, CLOSE OR NOT IN THE CORRECT POSITION, FAILED VALVE
36 – MOV-361 FAILED TO OPEN, CLOSE OR NOT IN THE CORRECT POSITION, FAILED VALVE

SYMBOL LEGEND

- EXISTING
- ELECTRICAL SIGNAL
- DIGITAL LINK
- LOCAL MOUNTED INSTRUMENT
- PANEL MOUNTED INSTRUMENT OR ANNUNCIATOR CABINET
- W — STATUS LIGHT (STROBE) W = WHITE; R = RED
- * — PROGRAMMABLE LOGIC CONTROLLER (PLC) (*= SYSTEM ALARM) – PRIMARY LOCATION
- PROGRAMMABLE LOGIC CONTROLLER FIELD MOUNTED
- * — MONITOR & CONTROL SYSTEM (MCS)SHARED DISPLAY (VIDEO SCREEN) IN CONTROL ROOM (*= SYSTEM ALARM)
- HARDWARE INTERLOCK
- M — MOTOR
- GATE VALVE
- GLOBE VALVE
- CHECK VALVE
- EXPANSION JOINT
- TEMPERATURE SENSING ELEMENT
- BUTTERFLY VALVE
- BALL VALVE (2-WAY)
- CAPPED LINE (THREADED)
- QUICK DISCONNECT
- FLEX HOSE
- MUF — MUFFLER
- HEAT TRACED AND INSULATED
- INSULATED (NO HEAT TRACE)
- PITOT TUBE
- SHUNT TRIP BREAKER
- TEMPERATURE ELEMENT
- HEATER, HEAT EXCHANGER
- AUDIBLE ALARM
- PRESSURE RELIEF VALVE

SYSTEM IDENTIFICATION

SYSTEM	SYSTEM DESIGNATOR	SYSTEM NUMBER
VENTILATION TANK PRIMARY	VTP	01
WASTE STORAGE TANK	WST	06

SERVICE IDENTIFICATION

DR	DRAIN
EHR	ENCASEMENT HYDROTEST RISER
EXH	EXHAUST

PIPING IDENTIFICATION

3"SN-630-M9
- 3" — SIZE
- SN — SERVICE
- 630 — LINE NUMBER
- M9 — MATERIAL CODE: M5, M24, M25 & M26a = CARBON STEEL; M8 & M9 = STAINLESS STEEL

NOTES

1. ALL INSTRUMENTS/COMPONENTS IN THIS SYSTEM SHALL BE LABELED PER THE FOLLOWING EQUIPMENT IDENTIFICATION NUMBER (EIN) EXAMPLE:

   200G-VTP-PDIT-XXX
   - XXX — SEQUENTIAL NUMBER
   - PDIT — INSTRUMENT/COMPONENT IDENTIFIER
   - VTP — SYSTEM DESIGNATOR
   - 200 — STRUCTURE LOCATION
   - G — TANK FARM

2. ANY FAILURE DETECTION FROM CONTROL EQUIPMENT WILL CAUSE A SHUTDOWN OF PRIMARY VENT SYSTEM.
3. IDENTIFIED SHUTDOWNS INCLUDE THE FOLLOWING SYSTEM PROCESSES
   VENT SHUTDOWN – FAN AND SAMPLE SYSTEM
   GLYCOL SYSTEM SHUTDOWN – GLYCOL HEATER AND PUMP
   GLYCOL HEATER SHUTDOWN – GLYCOL HEATER ONLY

NOTES: (CONTINUED)

4. ALL DISPLAYS FOR POR127-VTP-CP-110 IS ALSO ACCESSIBLE BY THE MONITORING AND CONTROL SYSTEM (MCS) VIA TANK FARMS LOCAL AREA NETWORK (TFLAN).
5. FLOW RATE SHOWN FOR TANK VENTILATION IS BASED ON A NOMINAL 3000 SCFM EXHAUSTER FLOW.
6. THE FOLLOWING EQUIPMENT IS MONITORED FOR FAILURE:
   SYSTEM PLC
   HEPA FILTER 1 (PDIT)
   HEPA FILTER 2 (PDIT)
   EXHAUSTER SEAL POT (LT)
7. NOT USED

NOTES: (CONTINUED)

8. SEE RPP-47867 FOR SET-POINT INFORMATION.
9. NOT USED

10 — NOT USED

11. SYSTEM INTERLOCK ENABLED 2 MINUTES AFTER EXHAUSTER RUNNING.

DEC 08 2016 — HANFORD RELEASE — 4 — .17

DRAWING TRACEABILITY LIST		REFERENCES		REVISIONS			
DWG NO	TITLE	REF NUMBER	TITLE	REV NO	DESCRIPTION	REV BY DATE	CHKR COMPANY
		NEXT USED ON SHEET 1					

NAME	DATE	COMPANY
DRAWN BY G. TORRES	6/15/16	WRPS
ENGINEERING REVIEW R.N. KYLE	11/8/16	WRPS
CHECKED BY J.S. DUBOIS	11/8/16	WRPS

U.S. DEPARTMENT OF ENERGY
Office of River Protection

EXHAUSTER TRAIN POR127 HVAC SYMBOLS & LEGEND

SIZE	BLDG NO	INDEX NO	DWG NO	REV
F	200G	7004	H-14-108927	0

SCALE: NONE — SHEET 4 OF

11/8/2016 3:05:11 PM — H-14-108927-4 — DOE_TB_F.DWG (01-01)

H-14-108927 — SH 4 OF — REV 0