ENGINEERING CHANGE NOTICE

Prepared For the U.S. Department of Energy,
Assistant Secretary for Environmental Management
By Washington River Protection Solutions, LLC., PO Box 850, Richland, WA 99352,
Contractor For U.S. Department of Energy, Office of River Protection, under Contract DE-AC27-08RV14800

1a. ECN No.: ECN-14-000537

1b. Project No.: T2R02 ☐ N/A

Page 1 of 7

2. Change Type	3. Date:	4. ECN Category
☒ DM ☐ FM ☐ TM	9/09/2014	☐ Revision ☐ Supersedure ☐ Direct Revision ☒ Supplemental ☐ Cancel

5. Modification Traveler No. TOC-MT-00079 ☐ N/A | 6. DATR No. RPP-DATR- ☒ N/A

7. ECN Title: Add Butterfly Valve to Air Inlet Station

7a. Originator's Name	7b. Organization	7c. Phone Number
G Wilson	Columbia Energy & Environmental Services	(509) 946-7111

8. Document Control Release Approval:

Signature: APPROVED By marguerite washington at 4:04 pm, Oct 02, 2014 | Date:

Release Stamp: DATE: Oct 02, 2014 HANFORD RELEASE

9. Trend Codes			10. Trademark Disclaimer
K	J	M	Reference herein to any specific commercial product, process, or service by trade name, trademark, manufacturer, or otherwise, does not necessarily constitute or imply its endorsement, recommendation, or favoring by the United States government or any agency thereof or its contractors or subcontractors. Printed in the United States of America.

11. Approvals: ☐ See DATR Report (Block 1d) for Specialty Approver concurrence

Title	Name	Signature	Date
Design Agent	G Wilson	G Wilson	9/12/14
Checker	J Campbell	[illegible]	9-12-14
Design Verifier	D Cap	[illegible]	9/12/14
Design Authority	ME Dallas	Mark E. Dallas	9.20.14
Engineering Manager	RE Bauer	[illegible]	9/20/14

12. Technical Baseline Document	13. Design Authority	14. Approval Designator
☒ Yes ☐ No	ME Dallas ☐ N/A	☒ N/A

15. Safety Designation	16. USQ Number	17. PrHA Number
☐ SC ☐ SS ☒ GS ☐ N/A	No. - - - R- N/A-B ☑ N/A PERTELECON FOR RD SMITH; MARK E. DALLAS; Mark E. Dallas 9.20.14 (USQ Evaluator Sign/Date)	☒ N/A PERTELECON FOR RD SMITH 02038, 02039, 02040, 02041; MARK E. DALLAS; Mark E. Dallas 9.20.14

18. Related Building/Facilities	19. Related Systems	20. Related Equipment ID Nos. (EIN)
241AX ☐ N/A	☒ N/A	AX101-VTP-V-009 AX102-VTP-V-009 AX103-VTP-V-009 AX104-VTP-V-009 ☐ N/A

20a. Work Package Number(s)	20b. Modification Work Complete
☒ N/A	Signature: Date:

20c. Restored to Original Status (TM) ☒ N/A

Signature: Date:

ENGINEERING CHANGE NOTICE

1a. ECN No.: ECN-14-000537

21. Engineering Documents/Drawings to be Changed (Incl. Sheet & Rev. Nos.)

Document Number	Rev.	Title	Drawing Status
H-14-109926 Sheet 1	0	241-AX Ventilation Air Inlet Station/Vacuum Controller Assembly	Facility
H-14-109926 Sheet 2	0	241-AX Ventilation Air Inlet Station/Vacuum Controller Assembly	Facility
H-14-109926 Sheet 3	0	241-AX Ventilation Air Inlet Station/Vacuum Controller Assembly	Facility

22. Related ECNs ☒ N/A

ECN Number	Rev.	Title

23. Problem Identification/Solution/Analysis

Problem Identification: The current design of the air inlet station does not provide any means to isolate the vacuum controller for maintenance activities.

Solution: Revise air inlet station to include a valve between the vacuum controller and the riser.

Analysis: See RPP-CALC-57519, 241-AX Ventilation Inlet Assembly Arrow Flow Analysis and Vacuum Controller Set Point, for analysis. Also see H-14-020109, 241-AX Ventilation System (VTP) P&ID.
(See page 4 for continuation)

24. Justification for Issue/Revision/Change

The addition a valve to air inlet station will support maintenance activities.

This ECN supports design, procurement, and fabrication and does not modify configuration, qualification, or evaluation of installed equipment. This drawing will be used to support installation/construction when included in a work package.

Design Verification performed in accordance with Columbia Energy & Environmental Services Procedure CE-ES-3.3.

25. Design Verification Extent and Method?

Extent:	Methods:	Design Type:
☐ DV ☐ DC ☐ EDV ☒ N/A	☐ Individual ☐ Alt Calcs ☒ N/A ☐ Team ☐ Qual Test	☐ I ☒ II ☐ III ☐ N/A ☐ IV ☐ V ☐ VI

26. FCN Used?	27. TBDs and Holds ☒ N/A	28. CAD File?	29. Expedited/Off-Shift ECN?
☐ Yes ☒ No		☒ Yes ☐ No	☐ Yes ☒ No

30. USQ Screening:

a. Does the change introduce any new failure modes to the equipment? ☐ Yes ☒ No
Basis (required for Yes):

b. Does the change increase the probability of existing failure modes? ☐ Yes ☒ No
Basis (required for Yes):

c. For Safety Significant equipment, does the change require a modification to Chapter 4 of the DSA and/or FRED? ☐ Yes ☐ No ☒ N/A
Basis (required for Yes):

31. Other Related Documents ☒ N/A

Document Number or ID	Rev.	Title or Description

Distribution

Name	Organization
JR Bellomy	A/AX Retrieval Engineering
RE Bauer	A/AX Retrieval Engineering
DB Parkman	A/AX Retrieval Engineering
JP Robocker	A/AX Retrieval Engineering
DB Rorden	Mech & HVAC Eng
RK Friesz	Operations QA Support
RC Winslow	SST R&C Radcon

ENGINEERING CHANGE NOTICE	1a. ECN No.: ECN-14-000537 Page 3 of 7

Distribution

Name	Organization
JS Conrad	Project Environmental Compliance
KJ Hull	Electrical/ Area 242A-Evaporator Engineering
MJ Powers	SST R&C Safety
PM Howard	R & C Construction
LB Atkins	Construction & Commissioning
CA Esvelt	Retrieval Work Planning
PB Debuigne	A/AX Retrieval Engineering
J Lohrasbi	A/AX Retrieval Engineering
RE Fox	Project Environmental Compliance
RF Stephens	A/AX Retrieval Engineering

ENGINEERING CHANGE NOTICE CONTINUED	1a. ECN No.: ECN-14-000537 Page 4 of 7

Block 23. Problem Identification/Solution/Analysis (continued):

H-14-109926 Sheet 1, Rev. 0: See page 5 of this ECN

1. Revise parts list to add title
2. Update quantities for Items 27, 30, and 33.
3. Add items 35 and 36

H-14-109926 Sheet 2, Rev. 0: See page 6 of this ECN

1. Add butterfly valve and associated hardware to assembly view

H-14-109926 Sheet 3 Rev 0: See page 7 of this ECN.

1. Revise Item 3 detail to change dimension

ENGINEERING CHANGE NOTICE
CONTINUATION SHEET

ECN No: ECN-14-000537

Document/Drawing No. H-14-109926 Sheet 1 Revision 0

WAS: ZONE: BOM

QTY -060	QTY -050	QTY -040	QTY -030	QTY -020	QTY -010	PARTS / DASH NUMBER	NOMENCLATURE/DESCRIPTION	MATERIAL/REFERENCE	SHEET	ITEM NO
					X	-010	AIR INLET STATION/VACUUM CONTROL		2,3	1
				X	1	-020	PIPE SPOOL		2,3	2
			X		1	-030	VACUUM RELIEF TRANSITION		2,3	3
		X			1	-040	TEE WELDMENT		2,3	4
	X				1	-050	ELBOW WELDMENT		2,3	5
X					1	-060	FILTER SPOOL PIPE SPOOL		2,3	6
										7
										8
										9
					1	H-2-90718-350	BREATHER FILTER ASSEMBLY		2	10
					1	H-14-106608-010	VACUUM RELIEF AND ASSOCIATED ASSEMBLY		2	11
					1	H-14-109927-090	SUPPORT STAND ASSEMBLY -- 6"		2	12
										13
		1					FLANGE, 6" LAP JOINT, CLASS 150	ASTM A182, GR F 304L	3	14
		1					LAP JOINT STUB END, 6" SCH 10 SHORT PATTERN (3.5" L), BW	ASTM A403, TP 304L	3	15
			AR	AR			PIPE, 6" SCHED 10, LAR	ASTM A312, GR. TP 304L	3	16
AR		AR					PIPE, 4" SCHED 10, LAR	ASTM A312, GR. TP 304L	3	17
			1				FLANGE, 12" WELD NECK, RF, CLASS 150 (ID BORED TO MATCH SCHED 10 PIPE)	ASTM A182, GR F 304L	3	18
		2	1	2			FLANGE, 6" WELD NECK, RF, CLASS 150 (ID BORED TO MATCH SCHED 10 PIPE)	ASTM A182, GR F 304L	3	19
					1		FLANGE, 6" BLIND , RF, CLASS 150	ASTM A182, GR F 304L	2	20
2	2	1					FLANGE, 4" WELD NECK, RF, CLASS 150 (ID BORED TO MATCH SCHED 10 PIPE)	ASTM A182, GR F 304L	3	21
			1				90° ELBOW, 6" SCHED 10, LR, BW	ASTM A403, CL WP-S, 304L (WP-W, WP-WX ACCEPTABLE)	3	22
	1						90° ELBOW, 4" SCHED 10, LR, BW	ASTM A403, CL WP-S, 304L (WP-W, WP-WX ACCEPTABLE)	3	23
		1					TEE, 6", SCHED 10S, BW	ASTM A403, CL WP-S, 304L (WP-W, WP-WX ACCEPTABLE)	3	24
			1				CONCENTRIC REDUCER, 12" TO 6" SCHED 10	ASTM A403, CL WP-S, 304L (WP-W, WP-WX ACCEPTABLE)	3	25
					12		BOLT, HEAVY HEX HEAD, 7/8-9UNC-2A, 4" L	ASTM A193, GR B7	2	26
					32		BOLT, HEAVY HEX HEAD, 3/4-10UNC-2A, 3 1/4" L	ASTM A193, GR B7	2	27
					16		BOLT, HEAVY HEX HEAD, 5/8-11UNC-2A, 3" L	ASTM A193, GR B7	2	28
					12		NUT, HEAVY HEX, 7/8-9UNC-2B	ASTM A194, GR 2H	2	29
					32		NUT, HEAVY HEX, 3/4-10UNC-2B	ASTM A194, GR 2H	2	30
					16		NUT, HEAVY HEX, 5/8-11UNC-2B	ASTM A194, GR 2H	2	31
					1	BLUE GARD STYLE 3700	GASKET, 1/16" THK, FOR STANDARD 12" CLASS 150 RF FLANGE	GARLOCK	2	32
					4	BLUE GARD STYLE 3700	GASKET, 1/16" THK, FOR STANDARD 6" CLASS 150 RF FLANGE	GARLOCK	2	33
					2	BLUE GARD STYLE 3700	GASKET, 1/16" THK, FOR STANDARD 4" CLASS 150 RF FLANGE	GARLOCK	2	34

IS:

PARTS LIST/MATERIAL LIST

QTY -060	QTY -050	QTY -040	QTY -030	QTY -020	QTY -010	PARTS / DASH NUMBER	NOMENCLATURE/DESCRIPTION	MATERIAL/REFERENCE	SHEET	ITEM NO
					X	-010	AIR INLET STATION/VACUUM CONTROL		2,3	1
				X	1	-020	PIPE SPOOL		2,3	2
			X		1	-030	VACUUM RELIEF TRANSITION		2,3	3
		X			1	-040	TEE WELDMENT		2,3	4
	X				1	-050	ELBOW WELDMENT		2,3	5
X					1	-060	FILTER SPOOL PIPE SPOOL		2,3	6
										7
										8
										9
					1	H-2-90718-350	BREATHER FILTER ASSEMBLY		2	10
					1	H-14-106608-010	VACUUM RELIEF AND ASSOCIATED ASSEMBLY		2	11
					1	H-14-109927-090	SUPPORT STAND ASSEMBLY -- 6"		2	12
										13
		1					FLANGE, 6" LAP JOINT, CLASS 150	ASTM A182, GR F 304L	3	14
		1					LAP JOINT STUB END, 6" SCH 10 SHORT PATTERN (3.5" L), BW	ASTM A403, TP 304L	3	15
			AR	AR			PIPE, 6" SCHED 10, LAR	ASTM A312, GR. TP 304L	3	16
AR		AR					PIPE, 4" SCHED 10, LAR	ASTM A312, GR. TP 304L	3	17
			1				FLANGE, 12" WELD NECK, RF, CLASS 150 (ID BORED TO MATCH SCHED 10 PIPE)	ASTM A182, GR F 304L	3	18
		2	1	2			FLANGE, 6" WELD NECK, RF, CLASS 150 (ID BORED TO MATCH SCHED 10 PIPE)	ASTM A182, GR F 304L	3	19
					1		FLANGE, 6" BLIND , RF, CLASS 150	ASTM A182, GR F 304L	2	20
2	2	1					FLANGE, 4" WELD NECK, RF, CLASS 150 (ID BORED TO MATCH SCHED 10 PIPE)	ASTM A182, GR F 304L	3	21
			1				90° ELBOW, 6" SCHED 10, LR, BW	ASTM A403, CL WP-S, 304L (WP-W, WP-WX ACCEPTABLE)	3	22
	1						90° ELBOW, 4" SCHED 10, LR, BW	ASTM A403, CL WP-S, 304L (WP-W, WP-WX ACCEPTABLE)	3	23
		1					TEE, 6", SCHED 10S, BW	ASTM A403, CL WP-S, 304L (WP-W, WP-WX ACCEPTABLE)	3	24
			1				CONCENTRIC REDUCER, 12" TO 6" SCHED 10	ASTM A403, CL WP-S, 304L (WP-W, WP-WX ACCEPTABLE)	3	25
					12		BOLT, HEAVY HEX HEAD, 7/8-9UNC-2A, 4" L	ASTM A193, GR B7	2	26
					24		BOLT, HEAVY HEX HEAD, 3/4-10UNC-2A, 3 1/4" L	ASTM A193, GR B7	2	27
					16		BOLT, HEAVY HEX HEAD, 5/8-11UNC-2A, 3" L	ASTM A193, GR B7	2	28
					12		NUT, HEAVY HEX, 7/8-9UNC-2B	ASTM A194, GR 2H	2	29
					40		NUT, HEAVY HEX, 3/4-10UNC-2B	ASTM A194, GR 2H	2	30
					16		NUT, HEAVY HEX, 5/8-11UNC-2B	ASTM A194, GR 2H	2	31
					1	BLUE GARD STYLE 3700	GASKET, 1/16" THK, FOR STANDARD 12" CLASS 150 RF FLANGE	GARLOCK	2	32
					5	BLUE GARD STYLE 3700	GASKET, 1/16" THK, FOR STANDARD 6" CLASS 150 RF FLANGE	GARLOCK	2	33
					2	BLUE GARD STYLE 3700	GASKET, 1/16" THK, FOR STANDARD 4" CLASS 150 RF FLANGE	GARLOCK	2	34
					8		STUD, 3/4-10UNC X 3 1/2" L	ASTM A194, GR B7	2	35
					1	060-362-SSS8-TSG-2	BUTTERFLY VALVE, ø6, FULL LUG SST BODY, DISC, AND STEM	KEYSTONE	2	36

ENGINEERING CHANGE NOTICE
CONTINUATION SHEET

ECN No: ECN-14-000537

Document/Drawing No. H-14-109926 Sheet 2 Revision 0

WAS: ZONE: C-D/3

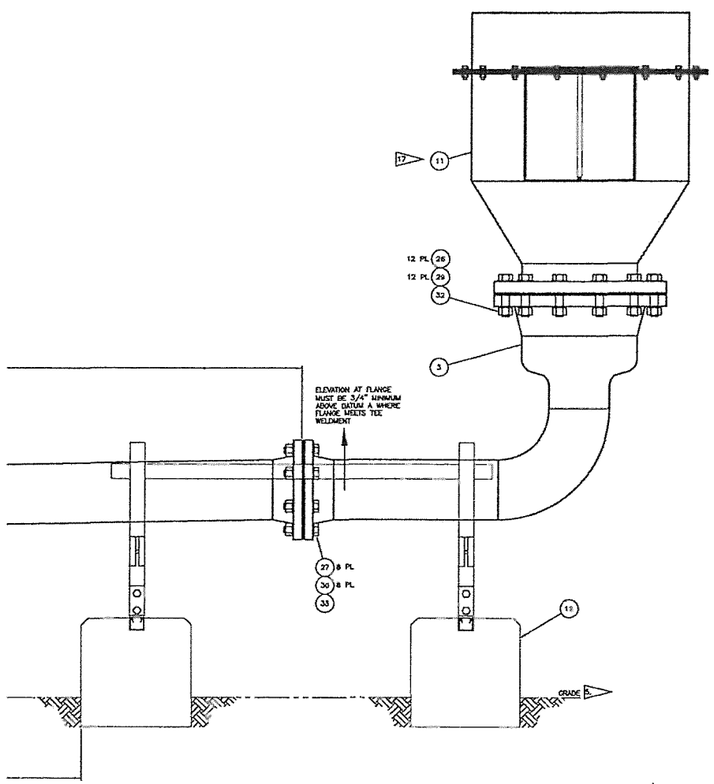

IS:

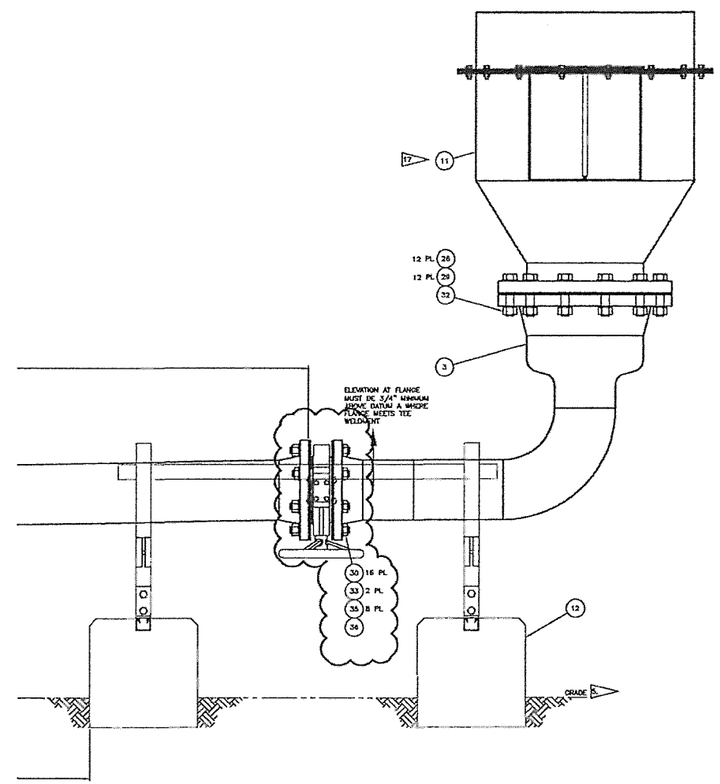

ENGINEERING CHANGE NOTICE
CONTINUATION SHEET

Page 7 of 7

ECN No: ECN-14-000537

Document/Drawing No. H-14-109926 Sheet 3 Revision 0

WAS: ZONE: C/8

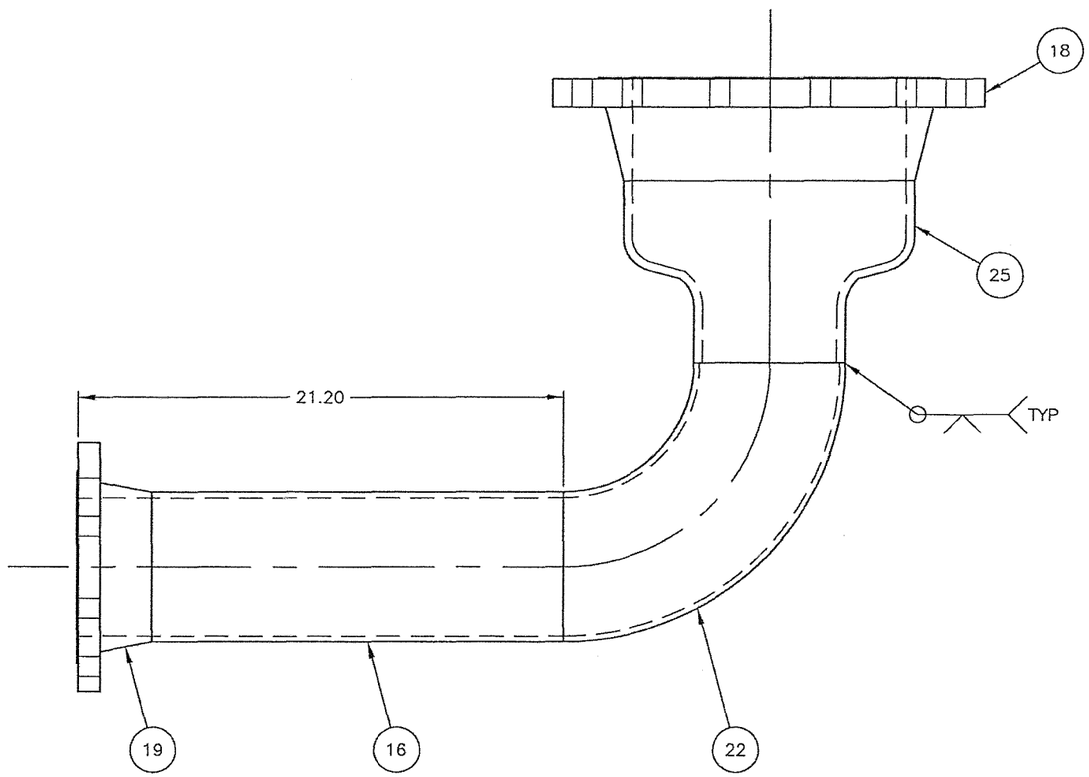

3 VACUUM RELIEF TRANSITION
SCALE: 3"=1'-0"

IS:

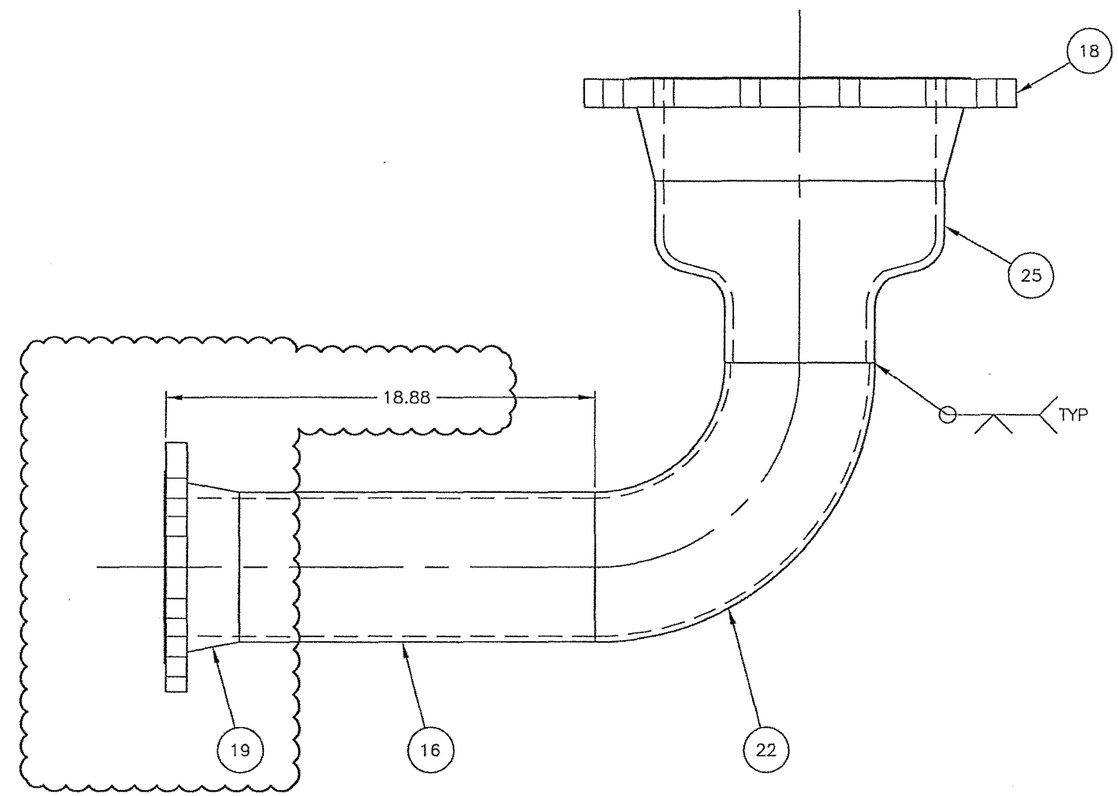

3 VACUUM RELIEF TRANSITION
SCALE: 3"=1'-0"