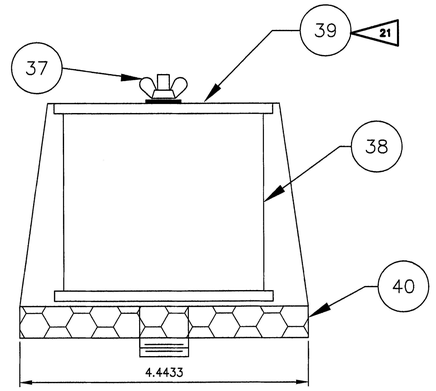

23 110 RADIAL BREATHER FILTER WITH WEATHER COVER

SCALE: NONE

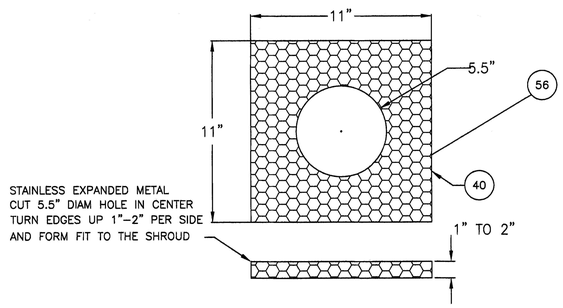

20 40 WEATHER SHIELD/COVER BIRD SCREEN

SCALE: NONE

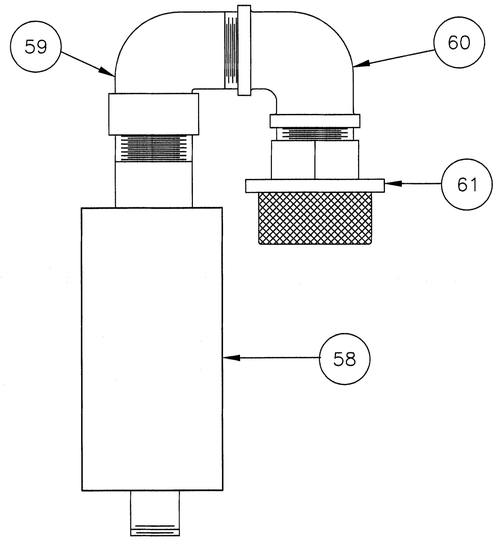

23 120 AXIAL FLOW BREATHER FILTER ASSY WITH GOOSE NECK CAP

SCALE: NONE

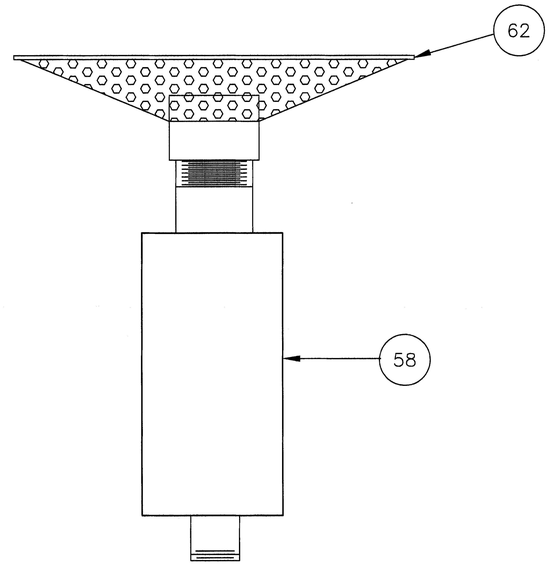

23 130 AXIAL FLOW BREATHER FILTER ASSY WITH WEATHER CAP

SCALE: NONE

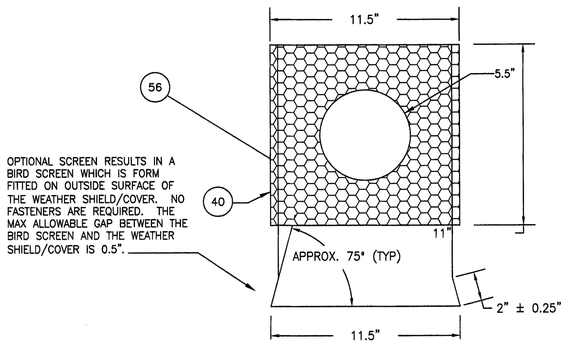

OPTIONAL WEATHER SHIELD/COVER BIRD SCREEN

SCALE: NONE

110 RADIAL BREATHER FILTER ASSY WITH WEATHER COVER		120 AXIAL FLOW BREATHER FILTER ASSY WITH GOOSE NECK CAP		130 BREATHER FILTER ASSY. W/4" VALVE FOR EXISTING 4"–150# FLANGES	
QUANTITY	ITEM NO	QUANTITY	ITEM NO	QUANTITY	ITEM NO
1	37	1	58	1	58
1	38	1	59	1	62
1	39	1	60		
1	40	1	61		

SEP 3 0 2000

DWG NO	TITLE
DRAWING TRACEABILITY LIST	

REF NUMBER	TITLE
NEXT USED ON	REFERENCES

MFD REV REL	REV NO	DESCRIPTION	REV BY DATE	ENGR COMPANY
		REVISIONS		

NAME	DATE	COMPANY
DRAWN BY SM	9/08	
ENGINEER	9/26/08	

U.S. DEPARTMENT OF ENERGY
Office of River Protection

PIPING
ATMOSPHERIC BREATHING
AIR FILTER INSTALLATION

SIZE	BLDG NO	INDEX NO	DWG NO	REV
F	241G	8900	H-14-021360	0

SCALE NONE | EDIT 822910 | SHEET 4 OF

2000

DOE_TB_F.DWG (01-01)

DWG NO H-14-021360 SH 4 OF REV 0