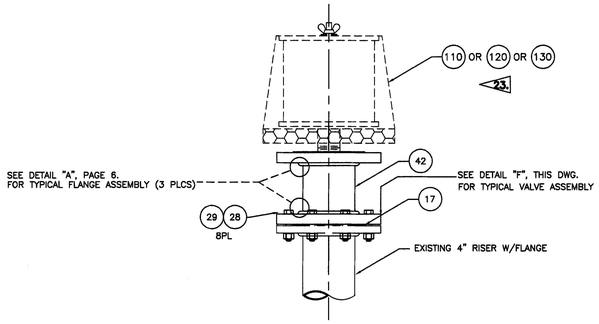

23. 4 BREATHER FILTER ASSY.
FOR EXISTING 4"–150# FLANGES
SCALE: NONE

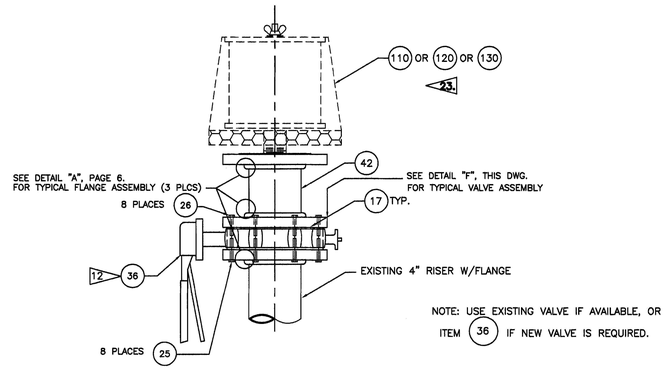

23. 5 BREATHER FILTER ASSY. W/4"
VALVE FOR EXISTING 4"–150# FLANGES
SCALE: NONE

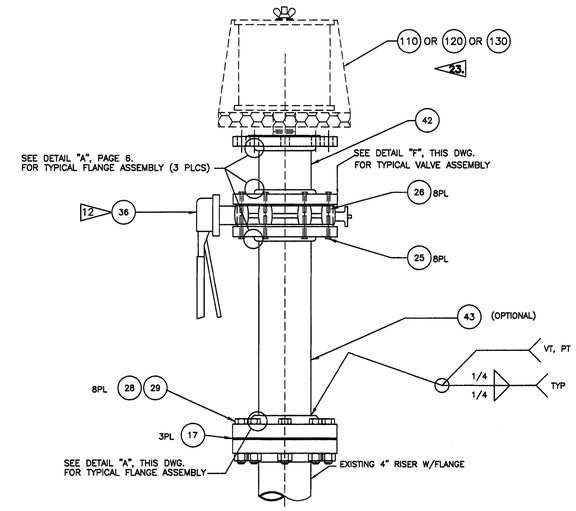

23. 6 BREATHER FILTER ASSY (WITH OPTIONAL 4" STRAIGHT PIPE)
SCALE: NONE

4 RADIAL BREATHER FILTER ASSY. FOR EXISTING 4"–150# FLANGES SEE DWG 90718 SH 17 FOR ASSY.		5 RADIAL BREATHER FILTER ASSY. W/4" VALVE FOR EXISTING 4"–150# FLANGES USING LUGGED BODY BUTTERFLY VALVE		6 RADIAL BREATHER FILTER ASSY. W/4" VALVE FOR REPLACING G–1 OR OPEN FACE HEPA FILTER ASSY. USING LUGGED BODY BUTTERFLY VALVE	
QUANTITY	ITEM NO	QUANTITY	ITEM NO	QUANTITY	ITEM NO
1	17	2	17	2	14
8	28	8	25	3	17
8	29	8	26	8	25
1	42	1	36	8	26
1	110	1	42	8	28
		1	110	8	29
				1	36
				1	42
				1	43
				1	110

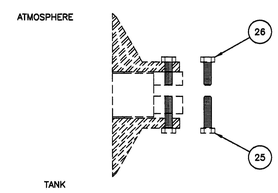

F DETAIL 4" LUGGED BODY BUTTERFLY VALVE DETAIL
SCALE: NONE

SEP 30 2008
DATE:
STA: 3
HANFORD RELEASE
18

DWG NO	TITLE	REF NUMBER	TITLE
DRAWING TRACEABILITY LIST		REFERENCES	
		NEXT USED ON H–2–90718 SH 1	

REV NO	DESCRIPTION	REV BY DATE	ENGR	COMPANY
REVISIONS				

NAME	DATE	COMPANY
DRAWN BY SM	9/08	
ENGINEER	9-26-08	

U.S. DEPARTMENT OF ENERGY
Office of River Protection

PIPING
AIR FILTER INSTALLATION
ATMOSPHERIC BREATHING

SIZE	BLDG NO	INDEX NO	DWG NO	REV
F	241G	8900	H–14–021360	0

SCALE NONE | EDT 822910 | SHEET 6 OF

31293 DOE_TB_F.DWG (01–01)

DWG NO H–14–021360 SH 6 OF REV 0