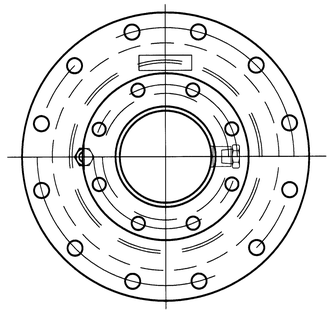

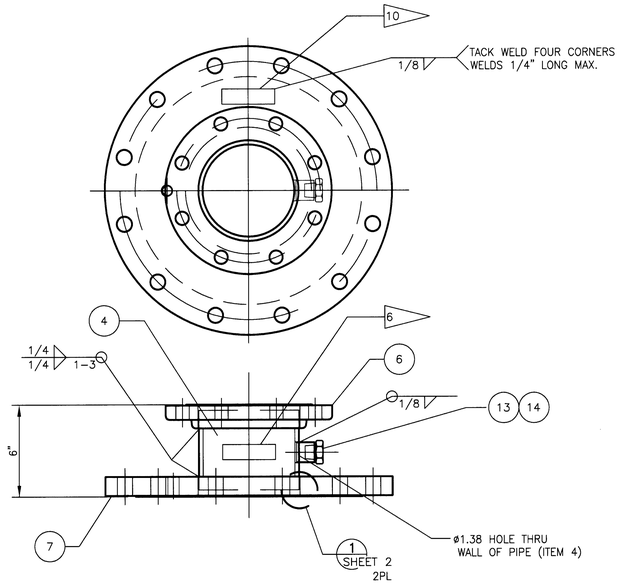

2 SUBASSEMBLY
SCALE: 3"=1'-0"

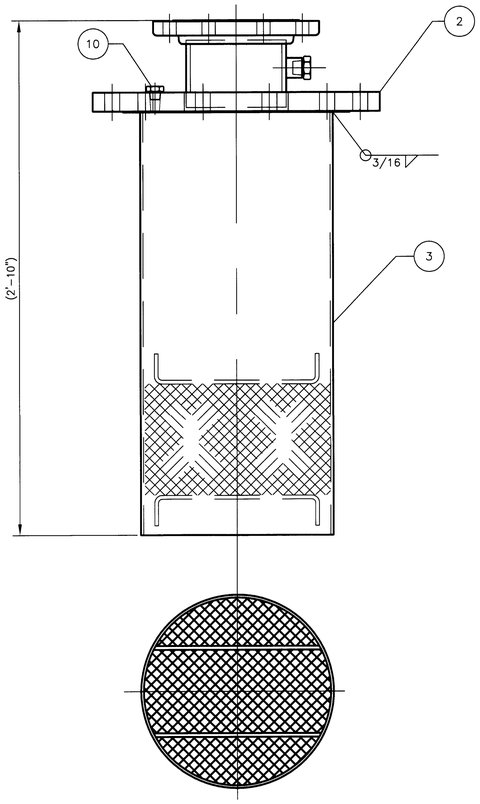

1 ASSEMBLY
SCALE: 3"=1'-0"

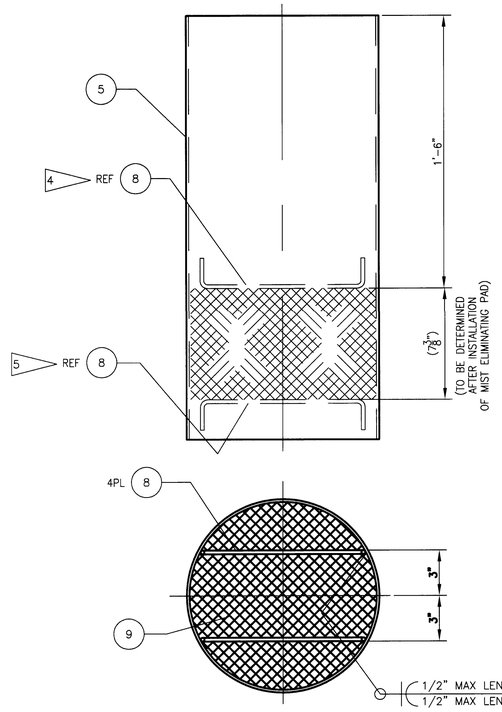

3 SUBASSEMBLY
SCALE: 3"=1'-0"

PARTS LIST/MATERIAL LIST

QTY REQD -090	-080	-070	-060	-050	-040	-030	-020	-010	PARTS / DASH NUMBER	NOMENCLATURE/DESCRIPTION	MATERIAL/REFERENCE	SHEET	ITEM NO
								X	-010	ASSEMBLY			1
				1			X	1	-020	SUBASSEMBLY			2
						X		1	-030	SUBASSEMBLY			3
							AR			PIPE, SCH 40 6"ø	ASTM A312 GR TP304L		4
						1				PIPE, ø12", SCHED 10 X 2'-4" L	ASTM A312 GR TP304L		5
							1			FLANGE, RF, SLIP ON 6"ø, 150 #	ASTM A182 F 304L		6
							1			FLANGE, BLIND, 12", 150# (MODIFIED)	ASTM A182 F 304L	2	7
						4				HOLDING BAR, BAR, ø1/4" X L AR	ASTM A276 304L	2	8
8						1			MODEL 299 TYPE 3G	MIST ELIMINATING PAD	KOCH-OTTO YORK		9
				1	2			1		PLUG, HEX HD, 3/4"ø, NPT	ASTM A182 TP 304L		10
					X				-040	ASSEMBLY, PRESSURE SENSING TUBE		2	11
AR					AR					TUBING, 1/4" X .035 WALL, SMLS	ASTM A269 GR TP 304L	2	12
		1					1			HALF COUPLING, THD, 1"ø, CL 3000	ASTM A182 F 304 OR 304L		13
		1					1			PLUG, HEX HD, 1"ø, NPT	ASTM A182 TP 304		14
				X					-050	ASSEMBLY, DEMISTER		3	15
			X	1					-060	ASSEMBLY, DEMISTER HOUSING		3	16
		X		1					-070	ASSEMBLY, FLANGED CONNECTION		3	17
	X	1							-080	ASSEMBLY, BLIND FLANGE (MODIFIED)		2	18
			AR							PIPE, SCH 10 10"ø	ASTM A312 GR TP 304L	3	19
	1									FLANGE, RF, SLIP ON, BLIND 12"ø, (MODIFIED)	ASTM A182 F 304L	3	20
			AR							ANGLE, 3/4" x 3/4" x 1/8"	ASTM A276 304L	3	21
			AR							BAR, 1/2"ø	ASTM A276 304L	3	22
11			1				1		MODEL 299 TYPE 3G	MIST ELIMINATOR PAD WITH SST HOLDING FRAME (SPECIAL)	KOCH-OTTO YORK	3	23
													24
X									-090	ASSEMBLY, PRESSURE SENSING TUBE		2	25
		AR								PIPE, SCH 10 8"ø	ASTM A312 GR TP 304L	3	26
		AR								FLANGE, RF, SLIP ON 8"ø	ASTM A182 F 304L	3	27
		1								HALF COUPLING, THD, 3/8"ø, CL 3000	ASTM A182 F 304 OR 304L	3	28
		1							SS-400-1-6-BT	MALE CONNECTOR, 1/4"ø TUBE X 3/8"ø NPT	SWAGELOK, SST	3	29

GENERAL NOTES:

1. REMOVE ALL BURRS AND BREAK SHARP EDGES.
2. UNLESS OTHERWISE NOTED TOLERANCES ARE TO BE ±1/8".
3. MATERIAL CERTS (CMTRs) ARE REQUIRED FOR ALL COMPONENTS.

4 TOP TWO HOLDING BARS ARE TO BE WELDED PRIOR TO INSTALLATION OF MIST ELIMINATING PAD.

5 BOTTOM TWO HOLDING BARS ARE TO BE WELDED AFTER INSTALLATION OF MIST ELIMINATING PAD. DURING WELDING PROCEDURE, SHIELD MIST ELIMINATING PAD FROM WELD SPATTER AND DEBRIS.

6 LABEL COMPONENT APPROXIMATELY IN LOCATION SHOWN WITH DRAWING NUMBER AND REVISION, ELECTRO-CHEMICAL ETCH ACCEPTABLE.

7. WELD AND INSPECT STAINLESS STEEL PIPE AND COMPONENTS PER ASME/ANSI B31.3. VT ALL WELDS AT FINAL PASS. WELDING PROCEDURES AND WELDING QUALIFICATIONS PER ASME SECTION IX ARE ACCEPTABLE.

8 FOR MIST ELIMINATING PAD PROCUREMENT SPECIFICATION AND OTHER DESIGN INFORMATION REFER TO RPP-18460.

9 REFERENCE VI FILE NUMBER 50305.

10 FIELD LOCATE MIST ELIMINATING PAD IDENTIFICATION LABEL. LABEL SHALL NOT INTERFER WITH FLANGE BOLT(S) OR FLANGE BOLT FLAT WASHER.

11 DEMISTER ASSEMBLY:
THE MIST ELIMINATING PAD SPECIFIED FOR THIS APPLICATION IS BASED ON THE KOCH-OTTO YORK MODEL 299 TYPE 3G MIST ELIMINATING PAD SPECIFIED FOR THE 500 CFM EXHAUSTERS. TESTING HAS SHOWN THIS PAD TO BE GREATER THAN 99 PERCENT EFFECTIVE IN ELIMINATING DROPLETS OF 5 TO 10um. (SEE YORK 80-67459, PERFORMANCE OF THE YORK MODEL 299 TYPE 3G DEMISTER, MOISTURE SEPARATOR IN REMOVING DROPLETS IN AN AIR-STREAM DISPERSION.) THE MIST ELIMINATING PAD IS SIZED FOR A RANGE OF 100 TO 250 CFM FLOW RATE. KOCH-OTTO RECOMEMMENDS A 10" DIAMETER FOR THE HOUSING OF THE DEMISTER PAD FOR 250 CFM FLOW. THE PAD IS INSTALLED IN A SECTION OF 10" SCHEDULE 10 STAINLESS STEEL PIPE. THE KOCH-OTTO YORK DEMISTER PAD IS MADE SLIGHTLY OVER-SIZED FOR A SUNG FIT INSIDE THE PIPE TO PREVENT BYPASS. THE TEST REPORT YORK 80-67459 SHOWS THE PRESSURE DROP FOR THE DEMISTER PAD OPERATING AT THE DESIGN FLOW RATE MAXIMUM MOISTURE REMOVAL CONDITIONS AT APPROXIMATLEY 1 INCH WC WITH CLEAN DRY PAD AND LESS THAN 2 INCH WC WITH CLEAN WET PAD. BECAUSE OF THE SIZE OF THE OTHER COMPONENTS AND FLOW RATE THROUGH THE DEMISTER, THE OVERALL PRESSURE DROP THROUGH THE DEMISTER ASSEMBLY IS APPROXIMATELY 1 INCH WC.

COMPONENT WEIGHTS

WEIGHT (lbs)	NOMENCLATURE/DESCRIPTION	ITEM NO.
55.6	ASSEEMBLY, DEMISTER HOUSING	16
106.4	ASSEMBLY FLANGED CONNECTION	17
162.0	ASSEMBLY, DEMISTER	15

APR 0 5 2004
DATE:
STA:
HANFORD RELEASE
ID:

DWG NO	TITLE
DRAWING TRACEABILITY LIST	

REF NUMBER	TITLE
REFERENCES	
NEXT USED ON	END ITEM

REV REL	REV NO	DESCRIPTION	REV BY DATE			
S	1	ECN 721215-R0 REVISED PER ECN 721327-R0	RJK 02/06 2004	GG	IDC	ENGR
MFG						COMPANY

REVISIONS

NAME	DATE	COMPANY
DRAWN BY R. KEELE	1/28/2004	IDC
CHECKED BY B. MALECK	1/28/2004	IDC
LEAD ENGINEER L. GOLDSTEIN	1/28/2004	IDC
PROJECT MANAGER S. BESWENGER	1/28/2004	IDC
DESIGN AUTHORITY		

U.S. DEPARTMENT OF ENERGY
Office of River Protection

DEMISTER, 12"

SIZE	BLDG NO	INDEX NO	DWG NO	REV
F	241G	8900	H-14-105286	1

SCALE NONE. EDT 820145 SHEET 1 OF 3

DOE_TB_F.DWG (01-01)

9495

DWG NO H-14-105286 SH 1 OF 3 REV 1

XXXX PLOTID XXXX