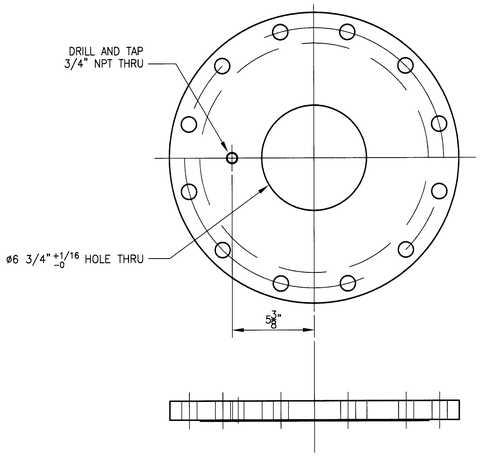

7 BLIND FLANGE
SCALE: 3"=1'-0"

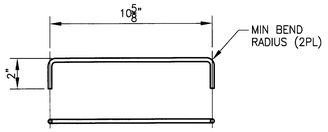

8 HOLDING BAR
SCALE: 3"=1'-0"

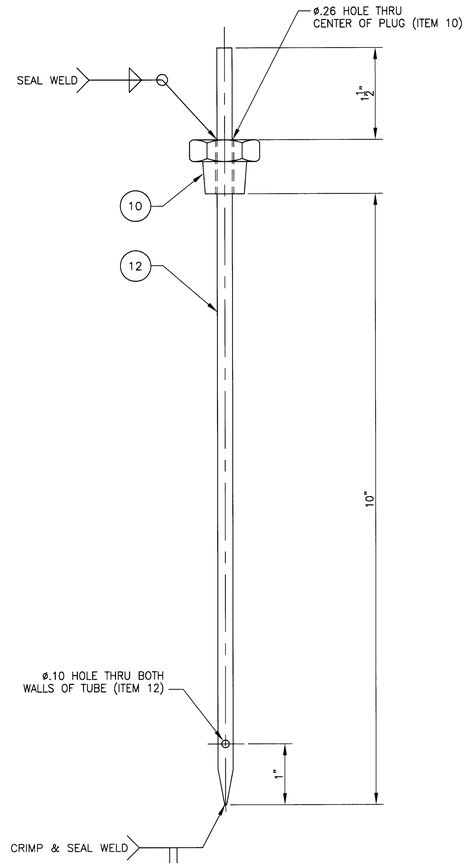

11 ASSEMBLY, PRESSURE SENSING TUBE
SCALE: FULL

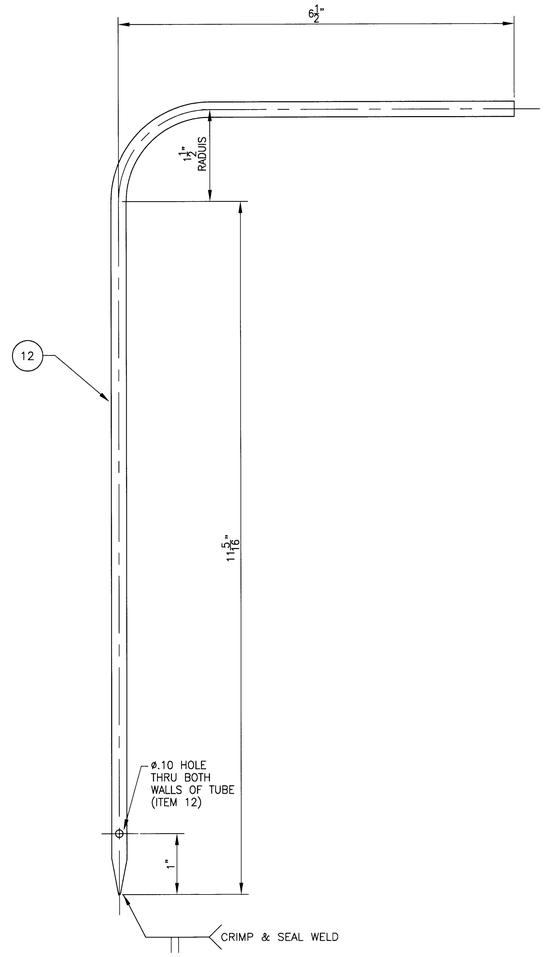

25 ASSEMBLY, PRESSURE SENSING TUBE
SCALE: FULL

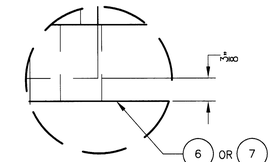

1 DETAIL
SHEET 1 SCALE: NONE

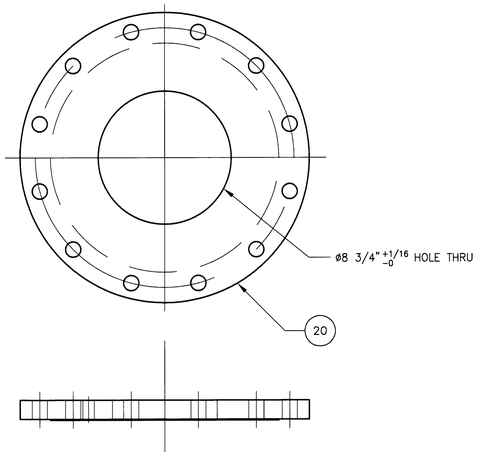

18 ASSEMBLY, BLIND FLANGE (MODIFIED)
SCALE: 3"=1'-0"

APR 0 5 2004
DATE:
STA:
MAXFORD
RELEASE

DWG NO	TITLE	REF NUMBER	TITLE
			REFERENCES
DRAWING TRACEABILITY LIST		NEXT USED ON END ITEM	

REV NO	DESCRIPTION	REV BY DATE	MFD	ENGR
1	ECN 721215-R0 REVISED PER ECN 721327-R0	RJK 02/06 2004	GG	IDC

REVISIONS

NAME	DATE	COMPANY
DRAWN BY R. KEELE	1/06/2004	IDC
CHECKED BY R. McLEOD	1/06/2004	IDC
IAD ENGINEER G. GOVIGHSTON	1/06/2004	IDC
PROJECT MANAGER S. BEDWENGER	1/06/2004	IDC
DESIGN AUTHORITY		

U.S. DEPARTMENT OF ENERGY
Office of River Protection

DEMISTER, 12" ASSEMBLIES

SIZE	BLDG NO	INDEX NO	DWG NO	REV
F	241G	8900	H-14-105286	1
SCALE NONE	EDT 820145		SHEET 2 OF 3	

10511

DOE_TB_F.DWG (01-01)

DWG NO H-14-105286 SH 2 OF 3 REV 1