GENERAL NOTES: (UNLESS OTHERWISE SPECIFIED)

1. ALL MATERIAL SHALL BE AS SPECIFIED OR AN APPROVED EQUAL QUALITY ANY MATERIAL SUBSTITUTION REQUIRES WRITTEN APPROVAL OF THE PURCHASER.
2. ABBREVIATIONS ARE IN ACCORDANCE WITH ASME Y14.38–1999.
3. DIMENSIONS AND TOLERANCING ARE PER ASME Y14.5M–1994.
4. ALL DIMENSIONS ARE IN INCHES.
   TOLERANCES: FRACTIONS +/–1/8"
   DECIMALS .X = ±.1, .XX = ±.03, .XXX = ±.010
   ANGLES +/–2.5°
5. BREAK ALL SHARP EDGES AND REMOVE ALL BURRS.
6. ALL MACHINE TOOL RADII .03 MAX 63√
7. MACHINED SURFACE FINISH SHALL BE OR BETTER IN ACCORDANCE WITH ANSI B46.1.
8. ESTIMATED WEIGHT OF STRUCTURAL SUPPORT ASSEMBLY IS 271 LBS.
9. MANUFACTURER'S RECOMMENDED TORQUE, 1/2–13 – 50 (ft–lbs)
10. DESIGN IS IN COMPLIANCE WITH WRPS SPECIFICATION RPP–SPEC–46546.
11. THE –020 AND –030 ASSEMBLIES ARE LIMITED BY A MINIMUM HEIGHT AS DETERMINED BY THE INSTALLATION OF ITEMS 18 AND 21 RESPECTIVELY.

PARTS LIST/MATERIAL LIST

QTY –040*	QTY –030	QTY –020	QTY –010	PARTS / DASH NUMBER	NOMENCLATURE/DESCRIPTION	MATERIAL/REFERENCE	SHEET	ITEM NO
			X	–010	STRUCTURAL SUPPORT ASSEMBLY		1	1
		X		–020	STRUCTURAL SUPPORT ASSEMBLY		3	2
	X			–030	STRUCTURAL SUPPORT ASSEMBLY		4	3
			1	–001	CONDUIT CLAMP CHANNEL MODIFIED B11–GRTN, CS	COOPER B–LINE	2	4
	1	1		–002	CONDUIT CLAMP CHANNEL MODIFIED B11A–GRTN, CS	COOPER B–LINE	2	5
1	1	1		H–14–109533–020	MIST ELIMINATOR LOCK ASSEMBLY	(CS)		6
			1	H–14–109533–010	MIST ELIMINATOR LOCK ASSEMBLY	(CS)	1	7
4	4	4	4	B280SQ–GRN	POST BASE, CS	COOPER B–LINE		8
AR	AR	AR	AR	B11–GRN	CONDUIT CLAMP CHANNEL, CS	COOPER B–LINE		9
AR	AR	AR	AR	B22A–GRN	CONDUIT CLAMP CHANNEL, CS	COOPER B–LINE		10
10	10	12	8	B115–GRN	FOUR HOLE CORNER ANGLE, CS	COOPER B–LINE		11
8	8	8	8	B556–GRN	GUSSET PLATE, FIVE HOLE CORNER, CS	COOPER B–LINE		12
	4	4	4	B532–GRN	GUSSET PLATE, FIVE HOLE TEE, CS	COOPER B–LINE		13
68	88	88	76	N225–ZN	SPRING NUT, 200 SERIES, 1/2–13UNC–2B	COOPER B–LINE		14
48	48	44	24	N725–ZN	SPRING NUT, 700 SERIES, 1/2–13UNC–2B	COOPER B–LINE		15
116	136	132	100		BOLT, HEX 1/2–13UNC X 1.25 LG	ASTM A307, CS, ZINC PLATED		16
116	136	132	100		LOCK WASHER, REG HLCL SPR, 1/2	CS, ZINC PLATED		17
2	2	4		B261–8–GRN	8" TWO HOLE 45° KNEE BRACE	COOPER B–LINE		18
4	4			B368–GRN	FOUR HOLE CLOSED ANGLE	COOPER B–LINE		19
AR	AR			B22	1 5/8 FRAMING CHANNEL	COOPER B–LINE		20
4	4			B139	THREE HOLE SWIVEL PLATE	COOPER B–LINE		21
X				–040*	STRUCTURAL SUPPORT ASSEMBLY		5	22

* OPTION: ALL STRUT, BRACKETS, FITTINGS, BOLTS, SPRING NUTS CAN BE GALVANIZED OR ZINC PLATED IN LIEU OF GRN COLD GALV. CUT ENDS.

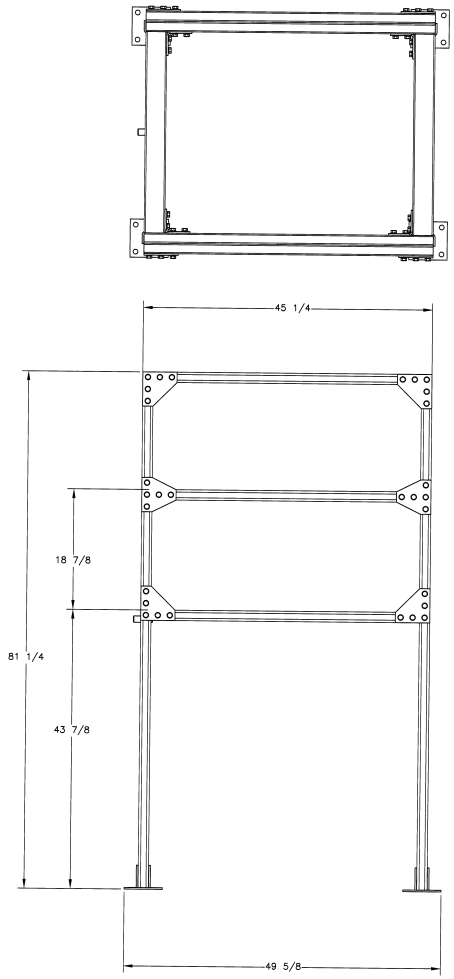

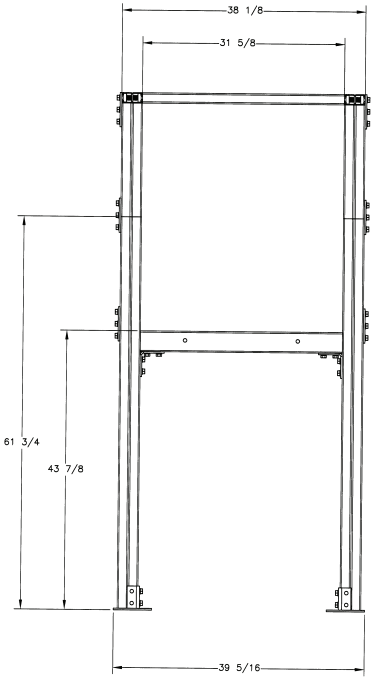

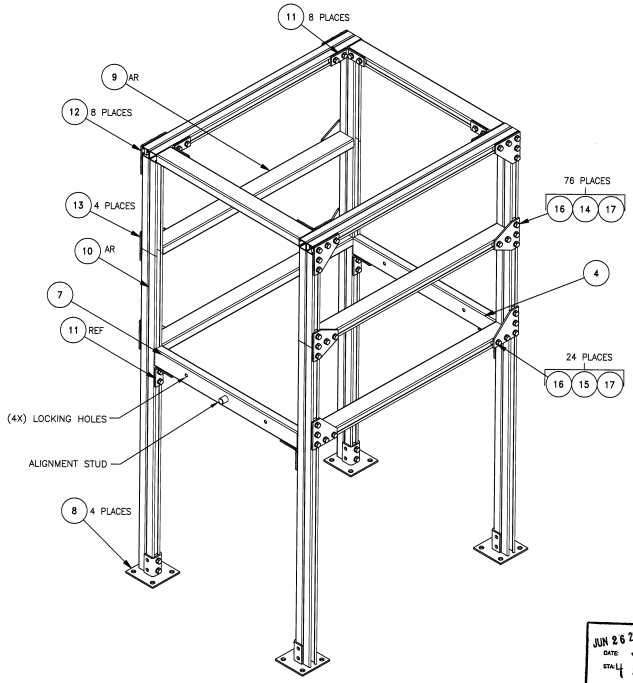

1 STRUCTURAL SUPPORT ASSEMBLY
SCALE: 1/8

JUN 26 2012 DATE: STA: 4 HANFORD RELEASE ID: 17

DWG NO	TITLE	REF NUMBER	TITLE
DRAWING TRACEABILITY LIST		REFERENCES	
		NEXT USED ON H–14–109613	

REV NO	DESCRIPTION	REV DATE	DRAFTING APPROV	ENGR COMPANY
1	INC ECN–11–002129 AND DIRECT REV PER ECN–12–000590	06/12		

REVISIONS

NAME	DATE	COMPANY
DRAWN BY		
SEE REVISION 0		
DESIGN AUTHORITY		

U.S. DEPARTMENT OF ENERGY
Office of River Protection

STRUCTURAL SUPPORT ASSEMBLY

SIZE	BLDG NO	INDEX NO	DWG NO	REV
F	241C	B900	H–14–109532	1
SCALE 1/8	EDF 824740	SHEET 1 OF 5		

28927

DOE_TB_F.DWG (01–01)

DWG NO H–14–109532 SH 1 OF 5 REV 1