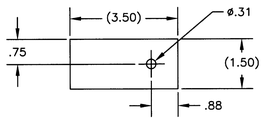

5 DETAIL
SCALE: 6" = 1'-0"

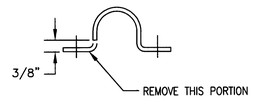

47 DETAIL
SCALE: 6" = 1'-0"

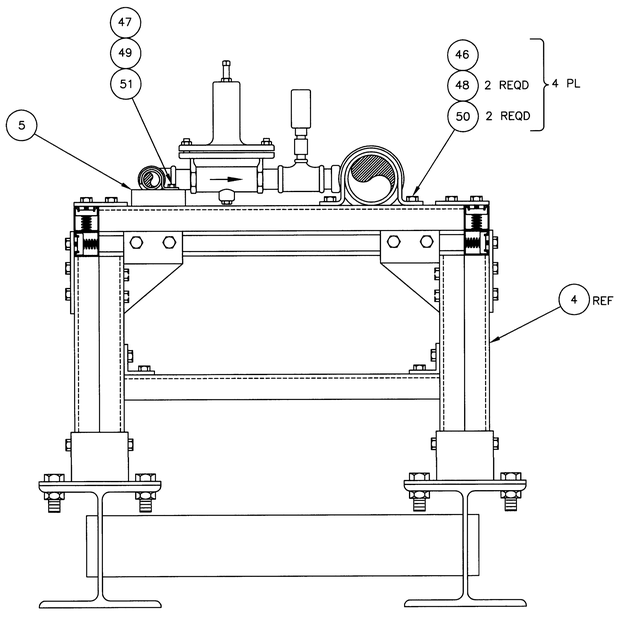

A SECTION
SCALE: 3" = 1'-0"

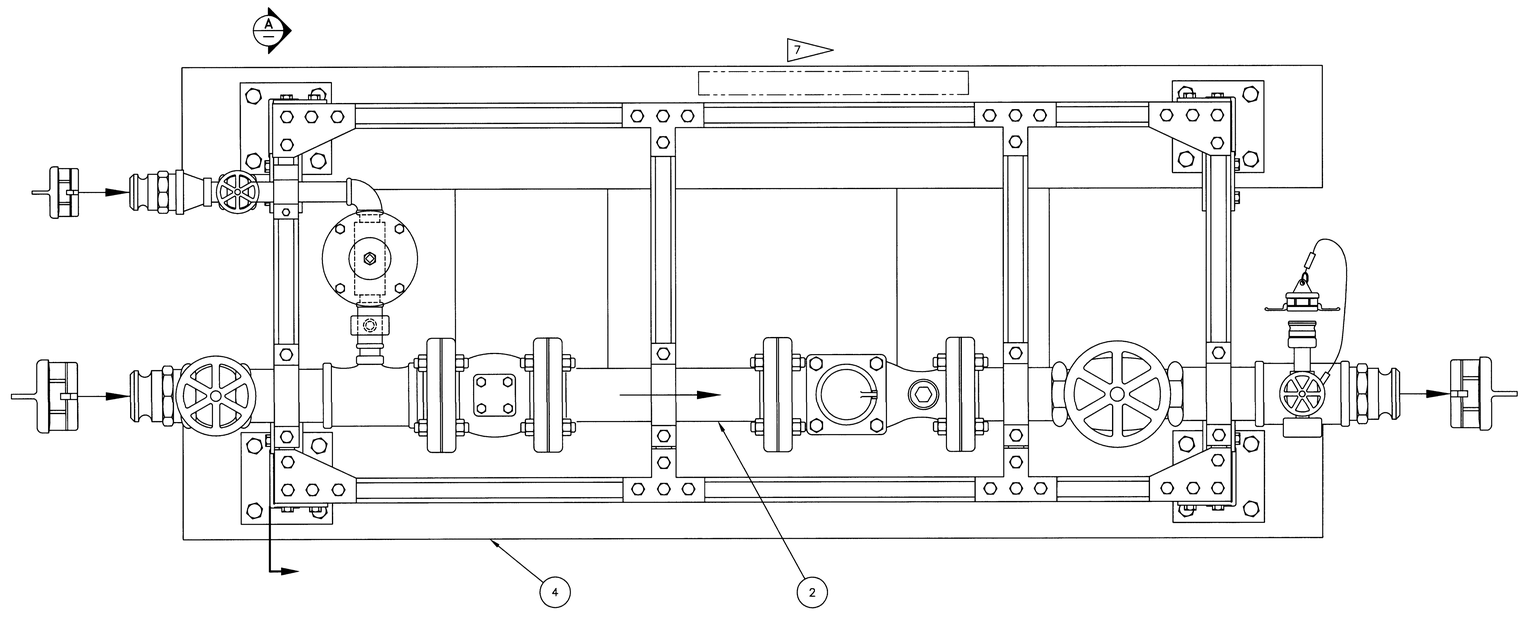

1 WATER CONTROL SKID GENERAL ARRANGEMENT
SCALE: 3" = 1'-0"

SEE SHEET 1 FOR GENERAL NOTES AND PARTS/MATERIAL LIST

MAY 22 2003
DATE:
STA: 14
HANFORD RELEASE
ID: 8

DWG NO	TITLE	REF NUMBER	TITLE
DRAWING TRACEABILITY LIST		REFERENCES	
		NEXT USED ON	

REV NO	DESCRIPTION	REV BY DATE	ENGR	COMPANY
1	REVISED PER ECN 720219 REV 0	JCF 4/03	TB 5/20/03	CHG

REVISIONS

NAME	DATE	COMPANY
DRAWN BY J FORDHAM	9/02	E2
DESIGN AUTHORITY WJ POWELL		

U.S. DEPARTMENT OF ENERGY
Office of River Protection

WATER CONTROL SKID GENERAL ARRANGEMENT

SIZE	BLDG NO	INDEX NO	DWG NO	REV
F	241G	4750	H-14-105395	1

SCALE SHOWN | EDT 635826 | SHEET 2 OF

1541 1 DOE_TB_F.DWG (01-01)

DWG NO H-14-105395 SH 2 OF REV 1