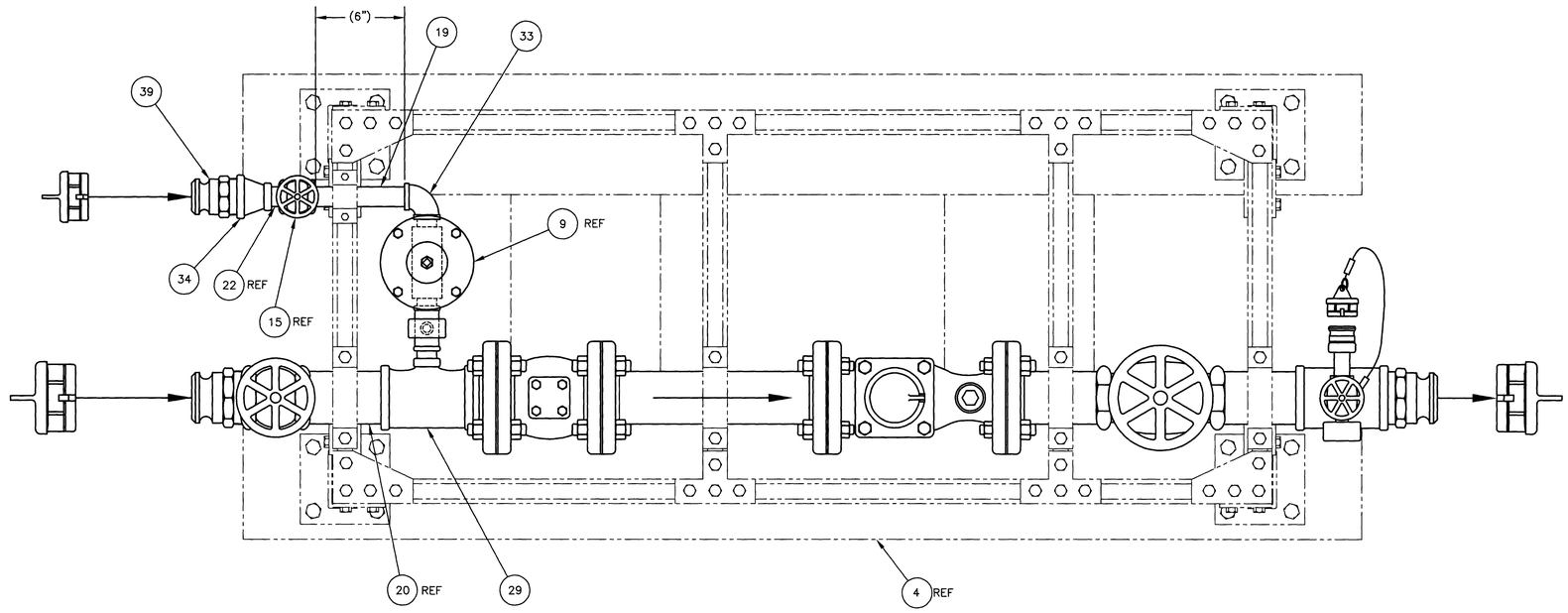

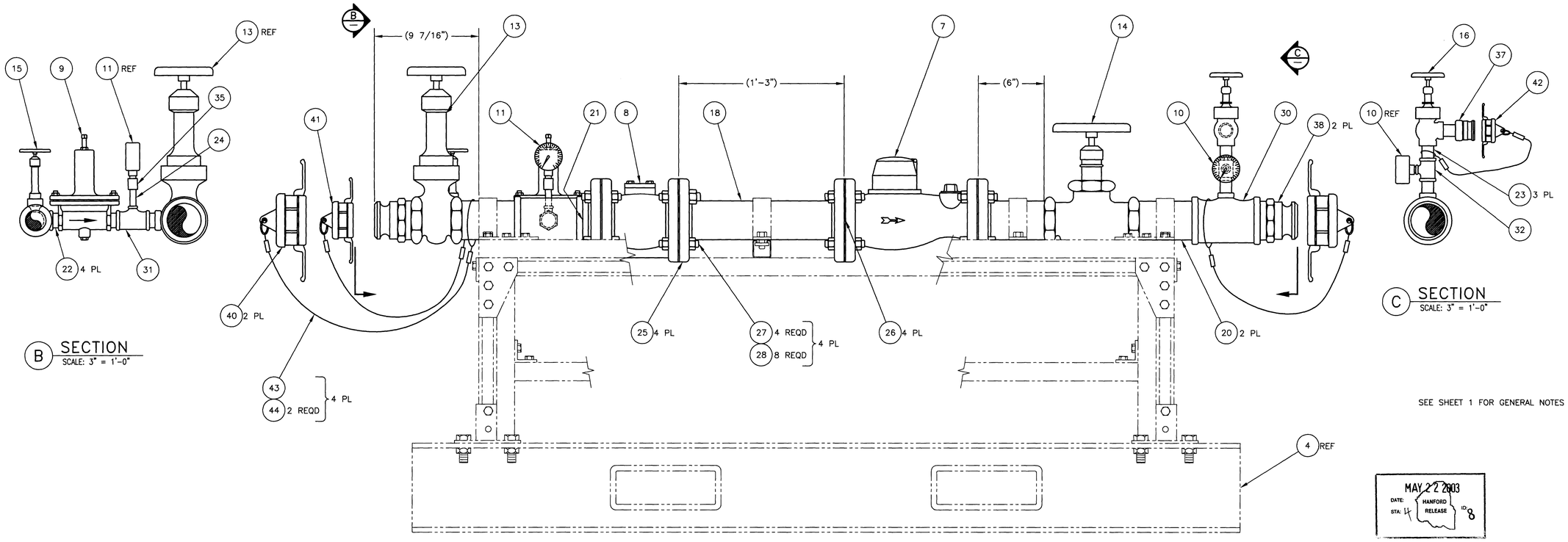

B SECTION
SCALE: 3" = 1'-0"

C SECTION
SCALE: 3" = 1'-0"

SEE SHEET 1 FOR GENERAL NOTES AND PARTS/MATERIAL LIST

MAY 22 2003
DATE:
STA: 14
HANFORD RELEASE
ID: 8

2 WATER PRESSURE CONTROL MANIFOLD ASSEMBLY
SCALE: 3" = 1'-0"

DWG NO	TITLE
DRAWING TRACEABILITY LIST	

REF NUMBER	TITLE
REFERENCES	
NEXT USED ON	

REV NO	DESCRIPTION	REV BY DATE	ENGR
1	REVISED PER ECN 720219 REV 0	JCF 4/03	TB 5/20/03 CHG

REVISIONS

NAME	DATE	COMPANY
DRAWN BY J FORDHAM	9/03	ES
DESIGN AUTHORITY WJ POWELL		

U.S. DEPARTMENT OF ENERGY
Office of River Protection

WATER PRESSURE CONTROL MANIFOLD ASSEMBLY

SIZE	BLDG NO	INDEX NO	DWG NO	REV
F	241G	4750	H-14-105395	1
SCALE SHOWN	EDT 635826		SHEET 3 OF	

29454

DOE_TB_F.DWG (01-01)

DWG NO H-14-105395 SH 3 OF REV 1