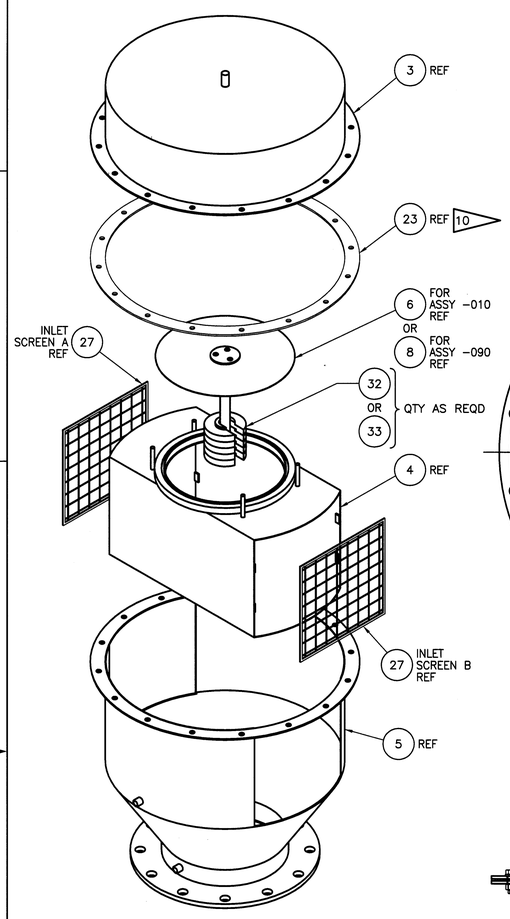

ISOMETRIC VIEW
SCALE: NONE

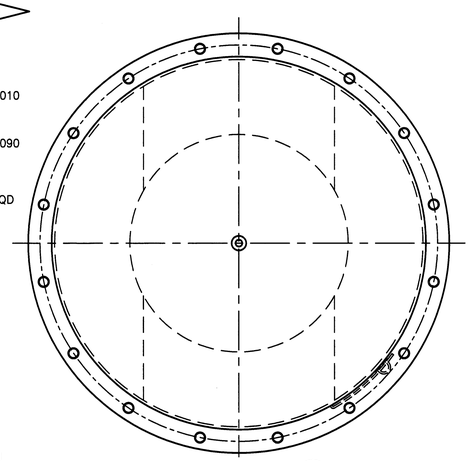

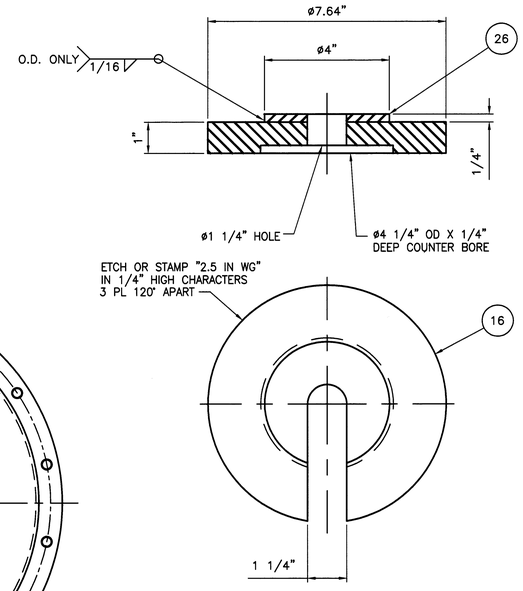

32 ASSEMBLY, WEIGHT FOR 2.5 IN WG
SCALE: HALF

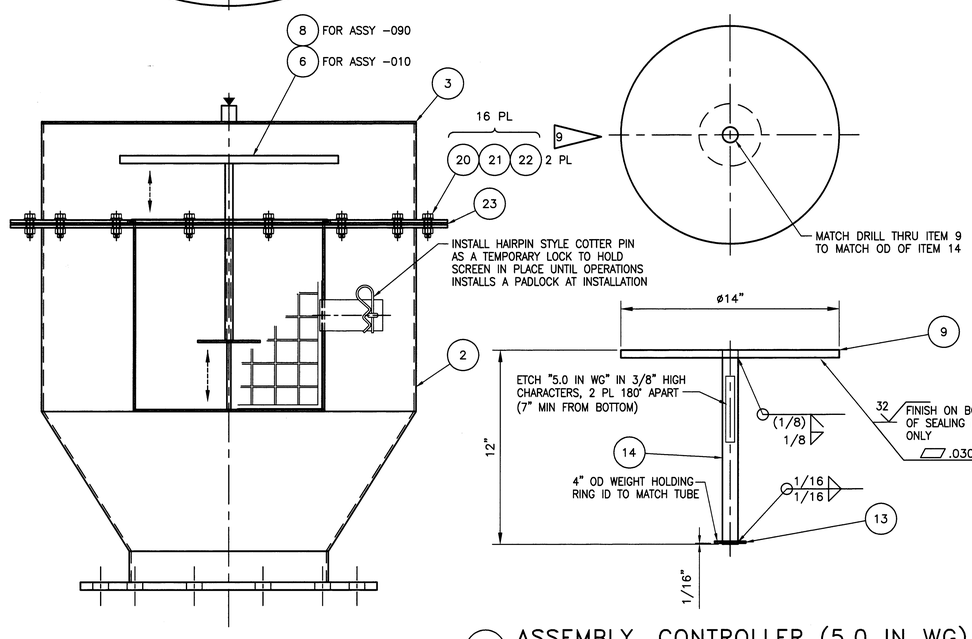

8 ASSEMBLY, CONTROLLER (5.0 IN WG)
SCALE: 3"=1'-0"

1 ASSEMBLY, VACUUM RELIEF CONTROLLER 0.5 IN WG
SCALE: 3"=1'-0"

31 ASSEMBLY, VACUUM RELIEF CONTROLLER 5.0 IN WG
SCALE: 3"=1'-0"

PARTS LIST/MATERIAL LIST

QTY REQD -130	-120	-110	-100	-090	-080	-070	-060	-050	-040	-030	-020	-010	PARTS / DASH NUMBER	NOMENCLATURE/DESCRIPTION	MATERIAL/REFERENCE	SHEET	ITEM NO
												X		ASSEMBLY, VACUUM RELIEF CONTROLLER 0.5 IN WG		1	1
											X	1	-020	ASSEMBLY, LOWER SECTION		2	2
				1						X		1	-030	ASSEMBLY, COVER		2	3
									X		1		-040	ASSEMBLY, AIR INLET		3	4
								X			1		-050	ASSEMBLY, HOUSING		2	5
							X					1	-060	ASSEMBLY, CONTROLLER (0.5 IN WG)		3	6
						X		1					-070	SUBASSEMBLY, MOUNTING FLANGE		3	7
				1	X								-080	ASSEMBLY, CONTROLLER (5.0 IN WG)		1	8
					AR	AR								PLATE, 1/2" THK	ASTM A240 304 OR 304L		9
AR								AR	AR	AR				SHEET, .0625 THK (16 GA)	ASTM A240 304 OR 304L		10
							AR							SHEET, .031 THK (22 GA)	ASTM A240 304 OR 304L		11
											1		-001	O-RING FLANGE, PLATE, 3/4"	ASTM A240 304 OR 304L	3	12
	AR				AR	AR	AR	AR		AR				PLATE, 1/8" THK	ASTM A240 304 OR 304L		13
					1									TUBING, ROUND, 1" OD (.10 WALL) X 12" L	ASTM A269 304 OR 304L		14
							1							TUBING, ROUND, 1" OD (.065 WALL) X 12" L	ASTM A269 304 OR 304L		15
			AR											PLATE, 1" THK	ASTM A240 304 OR 304L		16
											1			O-RING, .275 WIDE, NITRILE (BUNA-N) X 12.475 I.D.	COML AS-3578-454		17
									AR		AR			ROUND BAR, ø3/8"	ASTM A276 304 OR 304L		18
									AR		AR			ROUND BAR, ø1/4"	ASTM A276 304 OR 304L		19
				16								16		BOLT, HVY HEX, 3/8"-16UNC-2A X 1" L	ASTM A193 GR B8		20
				16								16		NUT, HEX, 3/8"-16UNC-2B	ASTM A194 GR 8		21
				32								32		WASHER, FLAT, 3/8"	ANY GRADE SST		22
				1								1		GASKET, 3/16" THK, 30-40 DURO, TEMPLATE FROM DETAIL 1	NEOPRENE		23
		AR												PLATE, 3/4" THK	ASTM A240 304 OR 304L		24
						1		1		1				1/4" HALF COUPLING, NPT THD, CL 3000 WITH 1/4" PLUG (HEX HEAD) CL 3000	ASTM A182 304 OR 304L		25
		AR	AR											PLATE, 1/4" THK	ASTM A240 304 OR 304L		26
	X								2				-120	INLET SCREEN		3	27
	AR													WIRE MESH 1/16" DIA 1/2" X 1/2" OPENINGS	ANY GRADE SST		28
									1				-003	LOCKING STRAP PLATE, 1/16" THK X 2" X 6" LG	SST COML 316	3	29
								1						WELD-ON FIXED PADLOCK-EYE HASP	SST COML 316		30
				X									-090	ASSEMBLY, VACUUM RELIEF CONTROLLER 5.0 IN WG		1	31
			X	6									-100	WEIGHT FOR 2.5 IN WG		1	32
		X										7	-110	WEIGHT FOR 0.5 IN WG		3	33
X									1				-130	ASSEMBLY, PLATE ATTACHMENT		2	34

CONTINUED ON SHEET 2

GENERAL NOTES: (UNLESS OTHERWISE NOTED)

1. MATERIALS USED FOR FABRICATION OF PRESSURE BOUNDRY HOUSING SHALL BE VERIFIED TO MEET THE ASTM STANDARDS CALLED OUT IN THE "MATERIAL LIST". THESE COMPONENTS SHALL BE VERIFIED AND EITHER A CERTIFIED MATERIAL TEST REPORT FOR METALLIC MATERIALS OR A CERTIFICATE OF COMPLIANCE FOR ALL OTHER MATERIALS FROM THE FABICATOR COVERING THE APPICABLE MATERIAL AS SPECIFIED.
2. WELD AND INSPECT JOINTS AND SEAMS IN ACCORDANCE WITH AWS D1.6 AND AWS D9.1 AS APPLICABLE. VISUAL EXAMINATION OF ALL WELDS ON FINAL PASS. WELD QUALIFICATIONS AND PROCEDURES PER ASME SECTION IX ARE ACCEPTABLE.
3. DIMENSIONING AND TOLERANCING PER ANSI Y14.5-1982. DIMENSIONS ARE IN INCHES. SHEET METAL TOLERANCE SHALL BE ±1/8" FRACTIONAL, ±0.03 DECIMAL AND ANGULAR ±3° UNLESS OTHERWISE SPECIFIED. MACHINING TOLERANCES ±1/16" UNLESS OTHERWISE SPECIFIED.
4. REMOVE ALL BURRS AND BREAK SHARP EDGES.
5. MAKE NAMEPLATE (ANY 300 SERIES SST) WITH MANUFACTURER NAME, FABRICATION DATE (MONTH/YEAR), DRAWING NUMBER H-14-106608, CAPACITY (OBTAIN VALUE FROM CUSTOMER ENGINEER REPRESENTATIVE), AND MANUFACTURER'S UNIQUE IDENTIFICATION (SERIAL) NUMBER. ETCH OR STAMP WITH 1/8" TO 1/4" HIGH LETTERING. TACK WELD NAMEPLATE TO HOUSING.
6. TO ADJUST VACUUM RELIEF/CONTROLLER SETTING (THE DIFFERENTIAL PRESSURE AT WHICH THE THE CONTROLLER WILL OPEN FOR VACUUM RELIEF/CONTROL), ADD OR REMOVE THE DESIRED NUMBER OF WEIGHTS AT THE BOTTOM OF THE CONTROLLER ASSEMBLY. THE WEIGHTS ARE DESIGNED TO STACK ON EACH OTHER ON THE BOTTOM OF THE CONTROLLER ASSEMBLY. THE SETTING IS EQUAL TO THE SUM OF THE DIFFERENTIAL PRESSURE MARKINGS IN INCHES WATER GAGE (IN WG) STAMPED/ETCHED ON THE CONTROLLER AND ON EACH WEIGHT. UNUSED WEIGHTS SHOULD BE STORED ON THE WEIGHT STORAGE HOOKS PROVIDED.

MAY 12 2011 DATE: STA: 4 HANFORD RELEASE ID: 11

DWG NO	TITLE	REF NUMBER	TITLE
DRAWING TRACEABILITY LIST		REFERENCES	
		NEXT USED ON	END ITEM

REV REL	REV NO	DESCRIPTION	REV BY DATE	DRAFTING APPVD	ENGR	COMPANY
S	RS 2	DIRECT REV PER ECN-11-000586	GLR 4/7/11	RN KYLE	GV GAUCK	WTPS
		REVISIONS				

SEE REVISION 0

NAME	DATE	COMPANY
DRAWN BY Karen Diener	11/30/04	FDG
DFTG APVD		
SYS ENGR		
APVD		
APVD		
APVD		
APVD		
DESIGN AUTHORITY		
CHG		

U.S. DEPARTMENT OF ENERGY
Office of River Protection

TANK VACUUM RELIEF AND CONTROL DEVICE

SIZE	BLDG NO	INDEX NO	DWG NO	REV
F	241G	8901	H-14-106608	2

SCALE AS SHOWN | EDT 821235 | SHEET 1 OF

9877 DOE_TB_F.DWG (01-01)

REV 2 | SH 1 OF | DWG NO H-14-106608