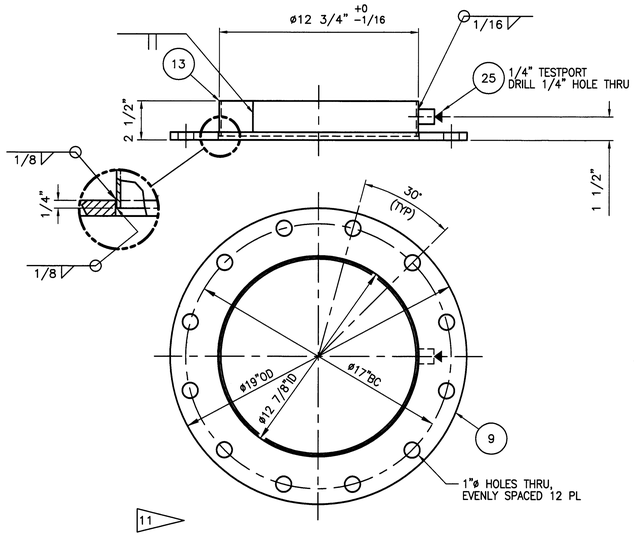

7 ASSEMBLY, MOUNTING FLANGE
SCALE: 3"=1'-0"

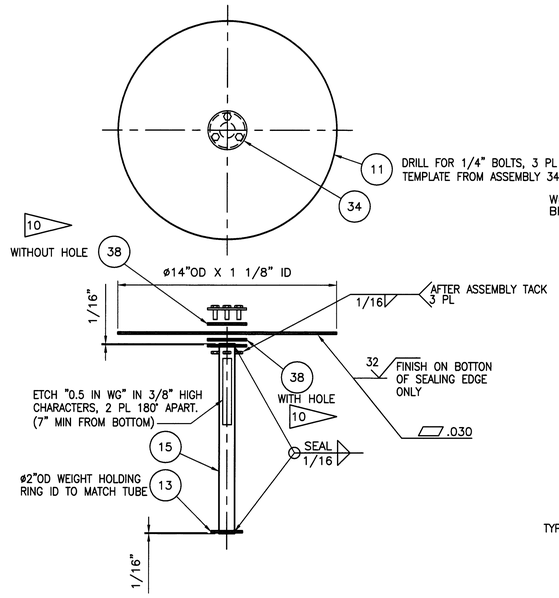

6 ASSEMBLY, CONTROLLER (0.5 IN WG)
SCALE: 3"=1'-0"

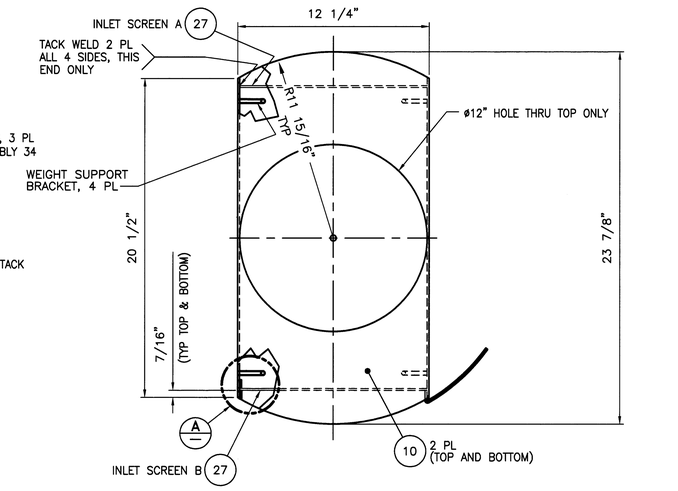

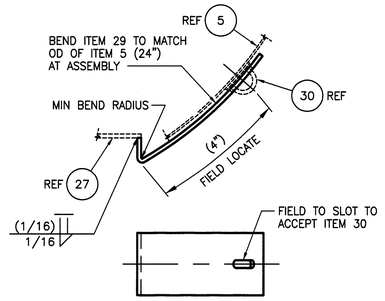

29 LOCKING STRAP
SCALE: HALF

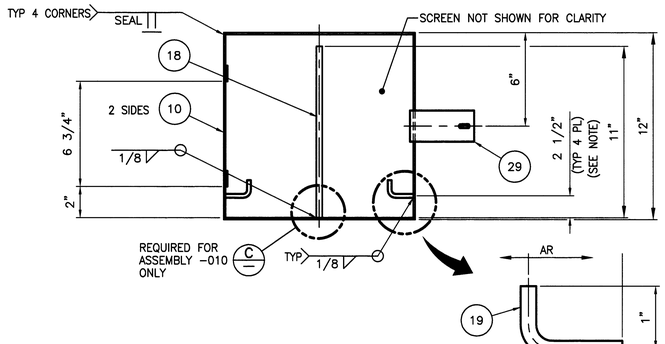

WEIGHT SUPPORT BRACKET
QUAINTLY AS REQUIRED TO HANG ALL WEIGHTS WHEN NOT IN USE (2 PER HOOK) LOCATE AS LOW AND AS CLOSE TO SCREENED ENDS AS POSSIBLE

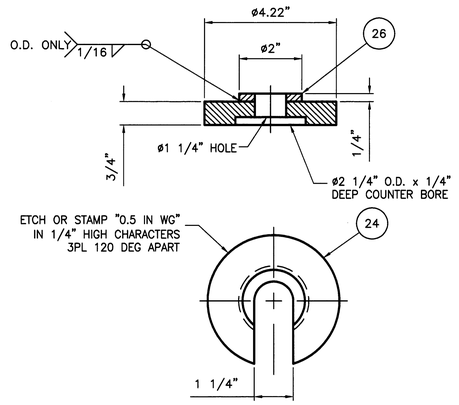

33 ASSEMBLY, WEIGHT FOR 0.5 IN WG
SCALE: HALF

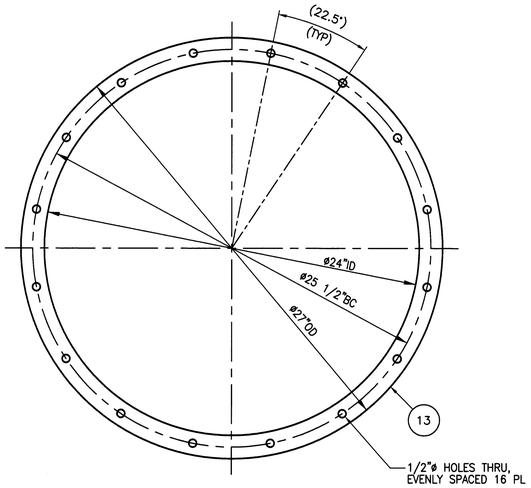

B DETAIL
SH 2 SCALE: 3"=1'-0"

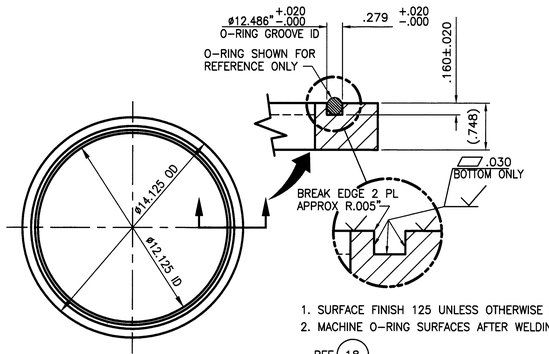

1. SURFACE FINISH 125 UNLESS OTHERWISE NOTED.
2. MACHINE O-RING SURFACES AFTER WELDING.

12 O-RING FLANGE
SCALE: 3"=1'-0"

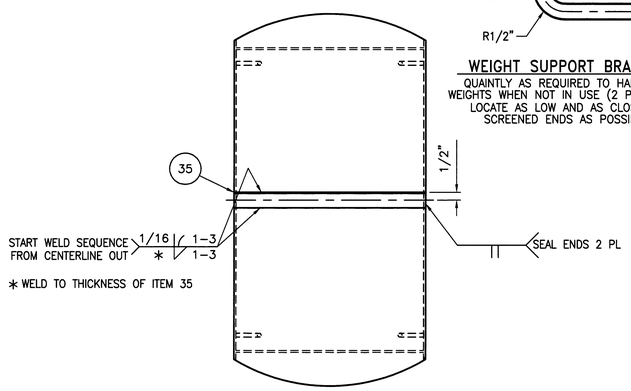

4 ASSEMBLY, AIR INLET
SCALE: 3"=1'-0"

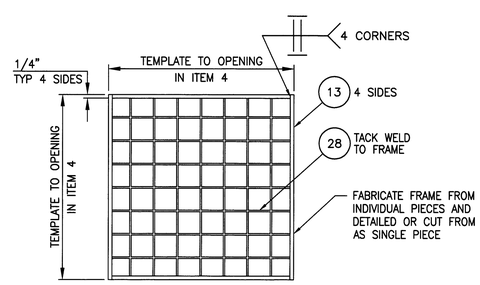

27 INLET SCREEN
SCALE: 3"=1'-0"

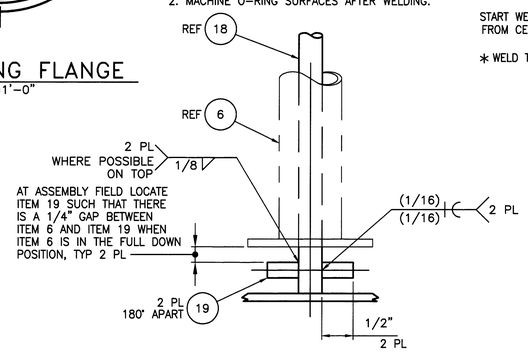

REQUIRED FOR ASSEMBLY -010 ONLY

C DETAIL
SCALE: FULL

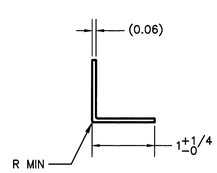

35 SHEET METAL ANGLE
SCALE: FULL

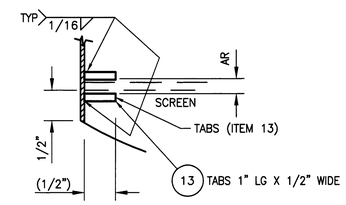

A DETAIL – MOUNTING TABS
SCALE: FULL

MAY 12 2011
DATE:
STA:
4
HANFORD RELEASE
ID:
II

FOR GENERAL NOTES AND PARTS LIST SEE SHEET 1

DWG NO	TITLE	REF NUMBER	TITLE
DRAWING TRACEABILITY LIST		NEXT USED ON SHEET 1	REFERENCES

REV NO	DESCRIPTION	REV BY DATE	DRAFTING APPVD	ENGR	COMPANY
RS 2	DIRECT REV PER ECN-11-000586 INCORPORATES ECN-726770-R0	GLR 4/11	RN KYLE	GJ GAUCK	WRPS

REVISIONS

NAME	DATE	COMPANY
DRAWN BY		
SEE REVISION 0		
DESIGN AUTHORITY		

U.S. DEPARTMENT OF ENERGY
Office of River Protection

TANK VACUUM RELIEF AND CONTROL DEVICE DETAILS

SIZE	BLDG NO	INDEX NO	DWG NO	REV
F	241G	8901	H-14-106608	2

SCALE SHOWN EDT 821235 SHEET 3 OF

23313

DOE_TB_F.DWG (01-01)

DWG NO H-14-106608 SH 3 OF REV 2