GENERAL NOTES: (UNLESS OTHERWISE SPECIFIED)

1. DIMENSIONS ARE IN INCHES.
2. TOLERANCES SHALL BE AS FOLLOWS:
   FRACTIONS = ±1/4
   ANGLES = ±2°
3. REMOVE ALL BURRS AND BREAK SHARP EDGES.
4. INSTALL EQUIPMENT IDENTIFICATION LABEL IN APPROXIMATE LOCATION
   TEXT CONTENTS: FLUSH WATER MANIFOLD ASSEMBLY, H-14-107508
   TEXT MATERIAL: PHENOLIC
   TEXT COLORS: BLACK LETTERING ON WHITE BACKGROUND
   TEXT SIZE: 3/16" HIGH CHARACTERS
5. SEAL PIPE THREADS WITH LOCTITE 567 PST WITH ACTIVATOR 7649 PER MFG DIRECTIONS.
6. PERFORM HYDROSTATIC PRESSURE TEST ON FLUSH MANIFOLD ASSEMBLY. PRESSURIZE TO 300 PSIG +10/-0 PSIG. MAINTAIN PRESSURE FOR 10 MINUTES. VERIFY NO LEAKAGE AT THREADED CONNECTION.
7. LABEL VALVES AND PRESSURE INDICATOR WITH PHENOLIC LABELS, BLOCK TEXT, 3/16" SIZE, BLACK LETTERING ON WHITE BACKGROUND, TEXT AS FOLLOWS:
   S302-RW-V-201
   S302-RW-V-202
   S302-RW-V-203
   S302-RW-V-204
   S302-RW-PI-201
8. WEIGHT OF FLUSH MANIFOLD ASSEMBLY 300 LBS.

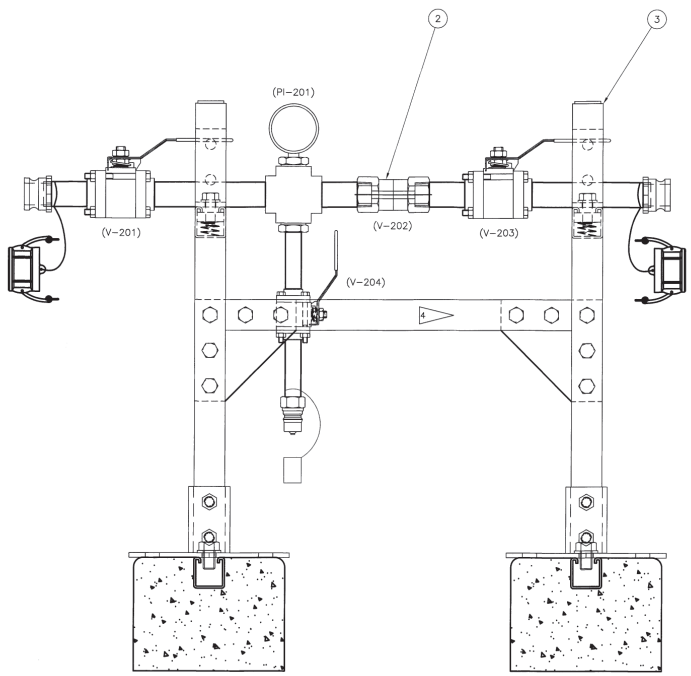

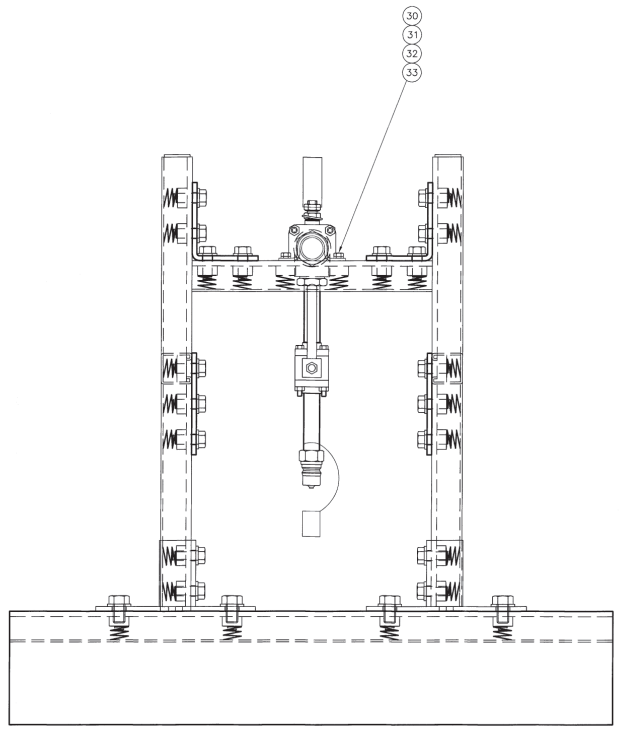

1 FLUSH MANIFOLD ASSEMBLY
SCALE: 3/8" = 1"

PARTS LIST/MATERIAL LIST

QTY REQD -030	QTY REQD -020	QTY REQD -010	PARTS / DASH NUMBER	NOMENCLATURE/DESCRIPTION	MATERIAL/REFERENCE	SHEET	ITEM NO
		X	-010	FLUSH MANIFOLD ASSEMBLY		1	1
	X	1	-020	MANIFOLD ASSEMBLY		2	2
X		1	-030	SUPPORT STAND ASSEMBLY		3	3
							4
							5
							6
	1			CROSS, 1" SCH40 THREADED, SST	ASTM A182		7
	1			HEX REDUCER, 1" MNPT X 1/4" FNPT, SST	ASTM A182		8
	1			HEX REDUCER, 1" MNPT X 1/2" FNPT, SST	ASTM A182		9
	2		71053RRL	VALVE, BALL, 1" THREADED, FULL PORT, 7000 SERIES	FLOWTEK		10
	1		SS-CHF16-1	VALVE, CHECK, 1" THREADED	SWAGELOK		11
	1		71033RRL	VALVE, BALL, 1/2" THREADED, FULL PORT, 7000 SERIES	FLOWTEK		12
	1		PGI-63C-PG200-LA01-B	PRESSURE GAUGE, 0-200 PSI	SWAGELOK		13
	2		100-A-SS	ADAPTER, MALE, 1"	DIXON		14
	2		100-DC-SS	DUST CAP, 1"	DIXON		15
	2		CH-SS-12	JACK CHAIN	DIXON		16
	1		ML4-KP26	QUICK DISCONNECT PLUG, 1/2" X 1/2" FNPT, INTERNAL CHECK VALVE	HANSEN		17
	1		PDC-4-HK	DUST CAP	HANSEN		18
	2			PIPE, NIPPLE, 1/2" SCH40 X 4"L, SEAMLESS	ASTM A312/A376		19
	3			PIPE, NIPPLE, 1" SCH40 X 4"L, SEAMLESS	ASTM A312/A376		20
	2			PIPE, NIPPLE, 1" SCH40 X 8"L, SEAMLESS	ASTM A312/A376		21
4			(B205)	CHANNEL END CAP	(B LINE)		22
AR			(B22)	STRUT, 1 5/8"	(B LINE)		23
2			H-2-815302-020	CONCRETE FOOTING, 32" LONG			24
4			(B104)	CORNER ANGLE	(B LINE)		25
4			(B556)	CORNER GUSSET PLATE	(B LINE)		26
AR			(1/2x1-1/4"HHCS)	HHCS, 1/2-13UNC-2A	(B LINE)		27
AR			(1/2" LW)	LOCKWASHER, 1/2"	(B LINE)		28
AR			(N225)	CHANNEL NUT, SPRING, 1/2", FOR B22	(B LINE)		29
		4	(1/4x1-1/4"HHCS)	HHCS, 1/4-20UNC-2A	(B LINE)		30
		4	(1/4" LW)	LOCKWASHER, 1/4"	(B LINE)		31
		4	(N224)	CHANNEL NUT, SPRING, 1/4", FOR B22	(B LINE)		32
		2	(B2400-1)	PIPE CLAMP	(B LINE)		33
4			(B280)	POST BASE	(B LINE)		34
8				HEX HEAD BOLT, 5/8-11UNC-2A X 1" LONG	ASTM A307 GR A OR B		35
8			(5/8" LW)	LOCKWASHER, 5/8"	(B LINE)		36
8			(N255)	CHANNEL NUT, SPRING, 5/8", FOR B22	(B LINE)		37

DATE: JUN 19 2008 ETA 3 of 18

DWG NO	TITLE
H-14-107502	DRAWING TREE

DRAWING TRACEABILITY LIST

REF NUMBER	TITLE
NEXT USED ON H-14-107505	REFERENCES

MFD REV	REV BY DATE	DESCRIPTION	REV BY DATE	ENGR	COMPANY
		REVISIONS			

NAME	DATE	COMPANY
DRAWN BY J. FOSS	10/14/98	CD
ENGINEER		
CHECKED		

U.S. DEPARTMENT OF ENERGY
Office of River Protection

FLUSH MANIFOLD ASSEMBLY

SIZE	BLDG NO	INDEX NO	DWG NO	REV
F	241G	1001	H-14-107508	0

SCALE SHOWN EDT 822711 SHEET 1 OF 3

18510 DOE_TB_F.DWG (01-01)

DWG NO H-14-107508 SH 1 OF 3 REV 0