GENERAL NOTES: (UNLESS OTHERWISE SPECIFIED)

1. ALL DIMENSIONS ARE IN INCHES.
2. BREAK ALL SHARP EDGES AND REMOVE ALL BURRS.
3. TOLERANCES SHALL BE AS FOLLOWS:
   FRACTIONS = ±1/4
   ANGLES = ±2°
4. SOME BACKGROUND LINEWORK AND HIDDEN LINES REMOVED FOR CLARITY.
5. PERFORM HYDROSTATIC PRESSURE TEST OF VALVE MANIFOLD ASSEMBLY TO 375 PSIG +10/-0 PSIG. MAINTAIN PRESSURE FOR 10 MINUTES AND VERIFY NO LEAKAGE. NPT THREADED JOINTS THAT LEAK DURING HYDROTEST MAY BE SEAL WELDED PER ASME B31.3, PROVIDED THREAD COMPOUND IS REMOVED, VT ONLY PER ASME B31.3. WELD PROCEDURES AND QUALIFICATIONS PER ASME SECTION IX ARE ACCEPTABLE.
6. ADJUST CHANNEL LOCATIONS (ITEMS 18 AND 19) AS REQUIRED TO ACHIEVE PROPER INSTALLATION OF FILTERS (ITEM 6 AND 7) AND MANIFOLD (ITEM 2).
7. SEAL PIPE THREADS WITH LOCTITE 567 PST WITH ACTIVATOR 7649 PER MFG DIRECTIONS.
8. LABEL INSTRUMENTS AND VALVES WITH EQUIPMENT IDENTIFICATION NUMBERS FROM H-14-107503.
9. WEIGHT OF VALVE MANIFOLD ASSEMBLY 460 LBS.

PARTS LIST/MATERIAL LIST

QTY REQD -040	-030	-020	-010	PARTS / DASH NUMBER	NOMENCLATURE/DESCRIPTION	MATERIAL/REFERENCE	SHEET	ITEM NO
	5			B205	CHANNEL END CAP	B LINE	3	44
			3	B2400-1	PIPE CLAMP, 1"	B LINE	1	45
	8				HEX BOLT, 5/8-11UNC-2A X 1"L	ASTM A307 GR A OR B	3	46
	8			5/8" LW	LOCKWASHER, 5/8"	B LINE	3	47
	8			N255	CHANNEL NUT, SPRING, 5/8", FOR B22	B LINE	3	48
2		1		P-PDC-2-HK	DUST CAP, 1/4" (2-HK)	HANSEN	2	49
		1		P-SCD-8-HK	DUST PLUG, 1" (8-HK)	HANSEN	2	50
			AR	B1999	VIBRA CUSHION	B LINE	1	51
	1			B532	FIVE HOLE TEE GUSSET PLATE	B LINE	3	52
2				SS-12-RB-4	REDUCING BUSHING, 3/4" MNPT X 1/4" FNPT	SWAGELOK	2	53
1				P-SCD-2-HK	DUST PLUG, 1/4" (2-HK)	HANSEN	2	54
2					PIPE NIPPLE, 1/4" SCH 40 X 4"L, SEAMLESS	ASTM A312 304L	2	55
3		1		SS-4-HN	HEX NIPPLE, 1/4" NPT	SWAGELOK	2	56
1				ML2-H16	QUICK DISCONNECT, FEMALE 1/4" NPT	HANSEN	2	57
			4	(3934T14)	SPRING SNAPS	(MCMASTER)	1	58
				(3014T45) OR (3014T251)	EYE BOLT, 1/4-20, 1" L	(MCMASTER)	1	59

PARTS LIST/MATERIAL LIST

QTY REQD -040	-030	-020	-010	PARTS / DASH NUMBER	NOMENCLATURE/DESCRIPTION	MATERIAL/REFERENCE	SHEET	ITEM NO
			X	-010	VALVE MANIFOLD RACK ASSEMBLY		1	1
		X	1	-020	VALVE MANIFOLD ASSEMBLY		2	2
	X		1	-030	MOUNTING RACK ASSEMBLY		3	3
X			1	-040	VENT FILTER ASSEMBLY FLT-103		2	4
								5
1				44152-01	FILTER HOUSING, CT-101, 316 SST 3/4"FNPT	CUNO	2	6
1				NT09T005S0NG	FILTER CARTRIDGE, 0.5 MICRON ABSOLUTE, POLYNET, 10" ELEMENT	CUNO	2	7
	1			-001	VALVE PAN 1, SHEET, 12 GA OR 11 GA, SST	ASTM A240	3	8
	1			-002	VALVE PAN 2, SHEET, 12 GA OR 11 GA, SST	ASTM A240	3	9
	2			H-2-815302-010	CONCRETE FOOTING, 48" LONG		3	10
		1		G2S07N09GMA	FLOW METER, TOTALIZER 3/4" FNPT	MUIS CONTROLS LTD	2	11
			AR	(3618T17)	CHAIN, 3/8"	(MCMASTER)	1	12
		1			PIPE NIPPLE, 1/4" SCH 40 X 9"L, SEAMLESS	ASTM A312 304L	2	13
		2			PIPE NIPPLE, 1" SCH 40 X 9"L, SEAMLESS	ASTM A312 304L	2	14
		2		SS-16-HRN-12	HEX REDUCING NIPPLE, 1" MNPT X 3/4" MNPT	SWAGELOK	2	15
		1			PIPE NIPPLE, 1" SCH 40 X 5"L, SEAMLESS	ASTM A312 304L	2	16
	4			B280	POST BASE FOR B22	B LINE	3	17
	AR			B22	CHANNEL	B LINE	3	18
	AR			B22D	CHANNEL	B LINE	3	19
	2			B143	FOUR HOLE CORNER PLATE	B LINE	3	20
	4			B140	THREE HOLE CORNER PLATE	B LINE	3	21
	16			B101	TWO HOLE CORNER ANGLE	B LINE	3	22
	71			1/2X1-1/4" HHCS	HHCS, 1/2-13UNC-2A X 1 1/4"L	B LINE	3	23
	71			1/2" LW	LOCKWASHER, 1/2"	B LINE	3	24
	71			N225	CHANNEL NUT, SPRING, 1/2", FOR B22	B LINE	3	25
			6	N224	CHANNEL NUT, SPRING, 1/4", FOR B22	B LINE	1	26
			6	1/4X1 1/2" HHCS	BOLT, 1/4-20UNC-2A x 1 1/2" L ZINC PLATED, CS	B LINE	1	27
			6	1/4" LW	WASHER, LOCK 1/4"	B LINE	1	28
		1		1471-0100-VT	FLOW INDICATOR, PADDLE WHEEL 1" FNPT	MUIS CONTROLS LTD	2	29
		1		ML8-KP36	QUICK DISCONNECT, MALE 1" FNPT	HANSEN	2	30
		1		ML8-HP36	QUICK DISCONNECT, FEMALE 1" FNPT	HANSEN	2	31
		1		P-PDC-8-HK	DUST CAP, 1" (8-HK)	HANSEN	2	32
2		1		ML2-K16	QUICK DISCONNECT, MALE 1/4" FNPT	HANSEN	2	33
		2		71053RRL	BALL VALVE, FULL PORT 1" FNPT, SST	FLOWTEK	2	34
2		1		71013RRL	BALL VALVE, FULL PORT 1/4" FNPT, SST	FLOWTEK	2	35
1		1		PGI-63C-PG200-LA01-B	PRESSURE INDICATOR, 0-200 PSIG LIQUID FILLED	SWAGELOK	2	36
		3		SS-16-SE	STREET ELBOW, 1" SST	SWAGELOK	2	37
		2		SS-16-HN	HEX NIPPLE, 1" SST	SWAGELOK	2	38
		1		SS-16-RB-4	REDUCING BUSHING, 1" MNPT X 1/4" FNPT SST	SWAGELOK	2	39
2		1		SS-4-SE	STREET ELBOW, 1/4" SST	SWAGELOK	2	40
1				SS-4-T	TEE, 1/4" FNPT SST	SWAGELOK	2	41
		2		SS-16-T	TEE, 1" FNPT SST	SWAGELOK	2	42
			3	B2002	PIPE CLAMP, 3/4"	B LINE	1	43

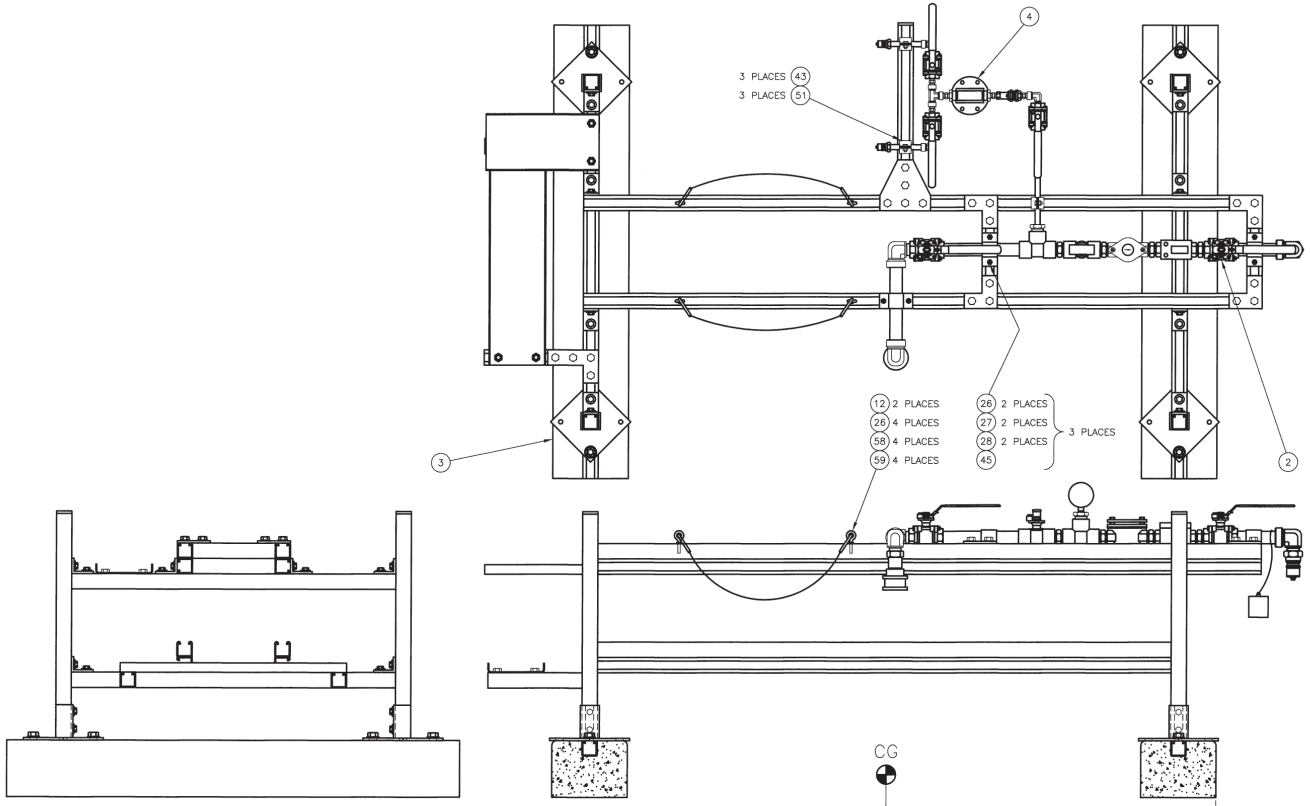

1 VALVE MANIFOLD RACK ASSEMBLY
SCALE: 3/16" = 1"

DWG NO	TITLE	REF NUMBER	TITLE
		H-14-107502	DRAWING TREE

DRAWING TRACEABILITY LIST — REFERENCES — NEXT USED ON H-14-107505

REVISIONS

REV NO	DESCRIPTION	REV BY DATE	ENGR COMPANY

NAME	DATE	COMPANY
DRAWN BY JT FOSS	02/14/08	CRDS
ENGINEER	6-11-08	
	6-11-08	

U.S. DEPARTMENT OF ENERGY
Office of River Protection

VALVE MANIFOLD ASSEMBLY

SIZE F | BLDG NO 241G | INDEX NO 8409 | DWG NO H-14-107511 | REV 0
SCALE AS SHOWN | EDT 822714 | SHEET 1 OF 3
13158 | DOE_TB_F.DWG (S1-01)

DATE: JUN 20 2008 STA. 3 #18

DWG NO H-14-107511 | SH 1 OF 3 | REV 0