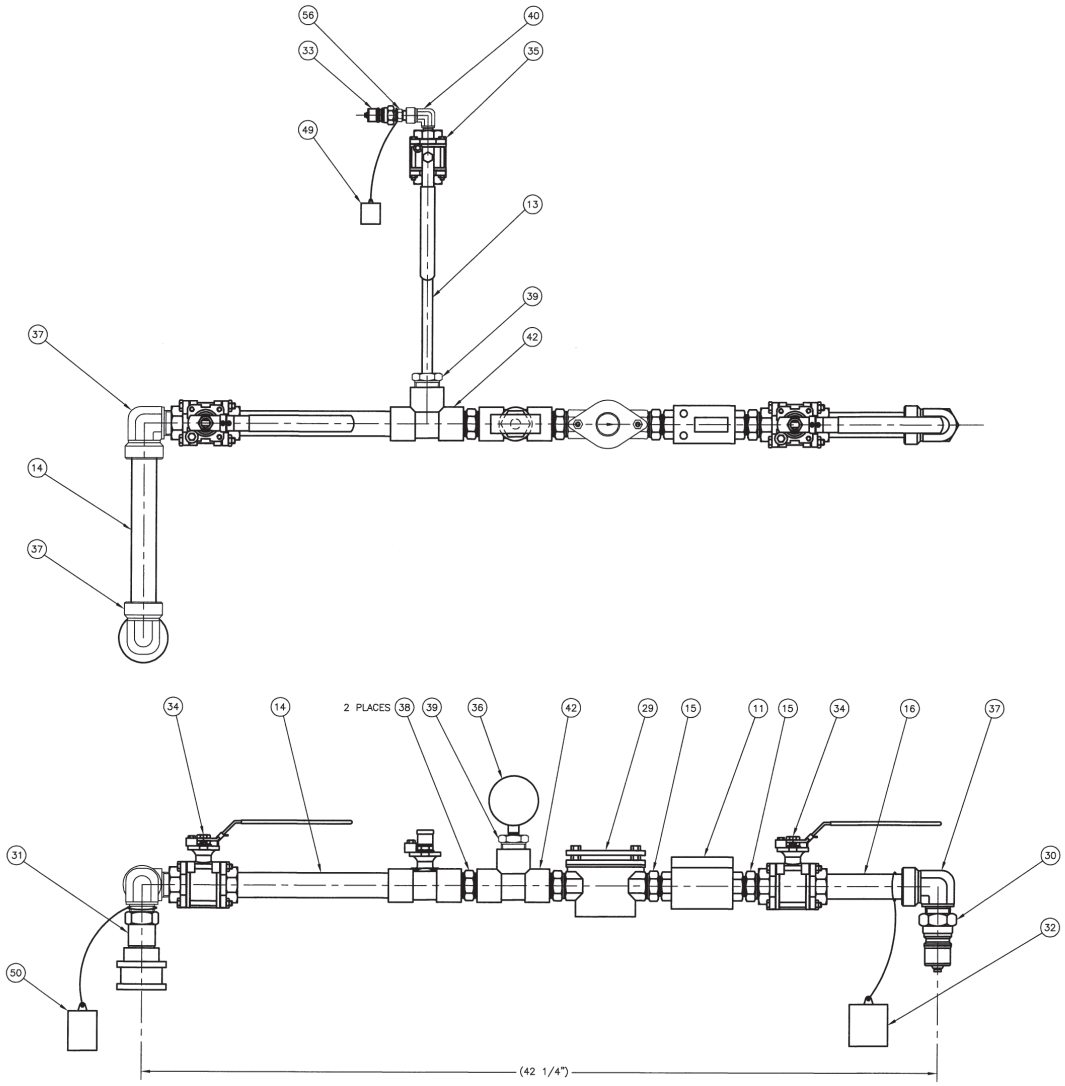


2 VALVE MANIFOLD ASSEMBLY
SCALE: 3/8" = 1"

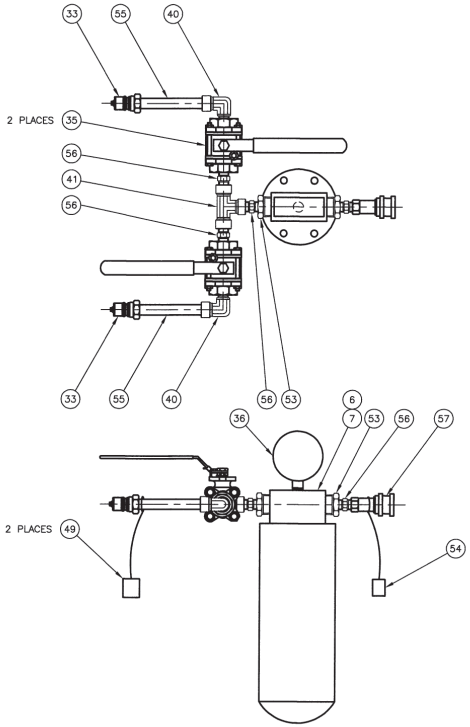


4 VENT FILTER ASSEMBLY FLT-103
SCALE: 3/8" = 1"

JUN 19 2008
DATE
DTA 3
-18

| DWG NO | TITLE |
|---|---|
| DRAWING TRACEABILITY LIST | |

| REF NUMBER | TITLE |
|---|---|
| REFERENCES | |
| NEXT USED ON | |

| MFD | REV NO | DESCRIPTION | REV BY DATE | ENGR | COMPANY |
|---|---|---|---|---|---|
| REV. REL | | REVISIONS | | | |

| NAME | DATE | COMPANY |
|---|---|---|
| DRAWN BY JT FOSS | 02/14/08 | CHES |
| ENGINEER | 6-19-08 | |
| SMM O'Toole | 7/12/08 | |

U.S. DEPARTMENT OF ENERGY
Office of River Protection

VALVE MANIFOLD ASSEMBLY

| SIZE | BLDG NO | INDEX NO | DWG NO | REV |
|---|---|---|---|---|
| F | 241G | 8409 | H-14-107511 | 0 |

SCALE AS SHOWN | EDT 822714 | SHEET 2 OF

11409

DOE_TB_F.DWG (01-01)

DWG NO H-14-107511 SH 2 OF REV 0