GENERAL NOTES: (UNLESS OTHERWISE SPECIFIED)

1. DIMENSIONS ARE IN INCHES.
2. TOLERANCES SHALL BE AS FOLLOWS:
   FRACTIONS = ±1/8
   ANGLES = ±1°
3. REMOVE ALL BURRS AND BREAK SHARP EDGES.
4. WELD AND INSPECT STRUCTURAL WELDS PER AWS D1.1 AS APPLICABLE. ALL WELDS SHALL BE VT AT FINAL PASS UNLESS OTHERWISE SPECIFIED. WELD PROCEDURES AND QUALIFICATIONS PER ASME SECTION IX ARE ACCEPTABLE.

5 PAINT IDENTIFICATION AND WEIGHT IN APPROXIMATE LOCATION AS SHOWN.
TEXT CONTENTS: H-14-107513-010 55 LBS CAGE ONLY
150 LBS SWL
TEXT TYPE: BLOCK
MATERIAL: ACRYLIC ENAMEL
TEXT COLORS: BLACK ON YELLOW BACKGROUND
TEXT SIZE: 1/2" HIGH CHARACTERS

6. PAINTING REQUIREMENTS:
   A. PREPARE AND PAINT ALL EXPOSED CARBON STEEL SURFACES. PRIME SURFACES WITH INDUSTRIAL GRADE STEEL PRIMER. APPLY SINGLE COAT. APPLY TWO FINISH COATS OF WATERBORNE ACRYLIC ENAMEL (AMERCOAT 220). FINISH COLOR SHALL BE GREY. APPLY PAINT PER MANUFACTURER'S SPECIFICATIONS. POWDERCOAT PRIMER (IFS, 2LSS-90056) AND TOP COAT (IFS-PLSF-70184) MAY BE SUBSTITUTED.

7 ACTEK SWIVEL HOIST RING NOTES (ALSO SEE NOTE 8):

   A. ALL SWIVEL HOIST RINGS SHALL BE AS MANUFACTURED BY ACTEK MANUFACTURING AND ENGINEERING, INC. SWIVEL HOIST RINGS SHALL HAVE A MINIMUM SAFETY FACTOR OF 5:1. INSTALL/RE-INSTALL THESE HOIST RINGS IN ACCORDANCE WITH MANUFACTURER'S INSTRUCTIONS EXCEPT AS AMENDED AND DOCUMENTED IN VENDOR INFORMATION FILE #VI-50159. THE MANUFACTURER'S AMENDED INFORMATION AND/OR OTHER RELEVANT INFORMATION IS DESCRIBED IN THE FOLLOWING NOTES.
   B. ALL STEEL COMPONENTS ENGAGING THE HOIST RINGS SHALL HAVE MINIMUM TENSILE STRENGTHS OF 58,000 PSI, CMTR REQUIRED.
   C. ALL ACTEK HOIST RING SCREW THREADS ARE CLASS 2A, THEREFORE, ALL TAPPED THREADS SHALL BE MATCHING CLASS 2B.
   D. PRIOR TO ITS USE, EACH HOIST RING SHALL BE TIGHTENED TO TORQUE VALUE AS SHOWN BELOW:

ACTEK HOIST RING PART NUMBER	SCREW SIZE	RATED LOAD (LBS)	TORQUE FT-LBS (±10%)
46102	5/16-18UNC	800	7

   E. IF "ANTI-SEIZE" LUBRICANT IS PRESENT IN THE THREADS OF THE HOIST RING SCREW OR IN THE TAPPED THREADS, IT MUST BE REMOVED WITH ACETONE OR ANOTHER VENDOR APPROVED SOLVENT.
   F. INSPECTION OF HOIST RINGS SHALL MEET MANUFACTURER'S AND HANFORD SITE HOISTING AND RIGGING MANUAL (DOE-RL-92-36) REQUIREMENTS.
   G. COLD WEATHER: HOIST RINGS SHALL BE WARMED (NOT HOT) TO ABOVE 10°F PRIOR TO THEIR USE. WARMED DURING INSTALLATION MUST HAVE THEIR TORQUE RE-CHECKED, PRIOR TO USE. HOIST RINGS SHOULD BE REMOVED AND KEPT IN A WARM LOCATION DURING EXTENDED COLD WEATHER USE.
   H. REFER TO RPP-CALC-36326 FOR LIFTING ANALYSIS.

8. ALTERNATE RIGGING ENGINEER APPROVED EQUIVALENT SWIVEL HOIST RING MAY BE USED IN LIEU OF ACTEK SWIVEL HOIST RING. ALTERNATE SWIVEL HOIST RINGS SHALL HAVE A MINIMUM SAFETY FACTOR OF 5:1. FOR ALTERNATE EQUIVALENT SWIVEL HOIST RING, ITS MANUFACTURER'S INSTRUCTIONS SHALL BE FOLLOWED FOR ITS PROPER USE. PRIOR TO INSTALLATION, THE ALTERNATE EQUIVALENT HOIST RING SCREW SIZE (THREAD TYPE, THREAD CLASS AND PROJECTION LENGTH) SHOULD BE VERIFIED TO MATCH THE EQUIPMENT THREADS AND TAPPED LENGTH. ALTERNATE EQUIVALENT SWIVEL HOIST MUST BE ADDED TO THIS DRAWING VIA AN ECN BEFORE USE.

9 COPE BOLT PLATE (ITEM 8) TO FIT WITHIN ANGLE (ITEM 12) AS NECESSARY.

10. PERFORM A LOAD TEST OF ITEM 1, FILTER LIFT CAGE ASSEMBLY. APPLY A LOAD OF 200 LBS INSIDE OF BOTTOM PLATE AND ENSURE LIFT CAGE ASSEMBLY HOLDS THE LOAD WHILE SUSPENDED FROM BOTH HOIST RINGS.

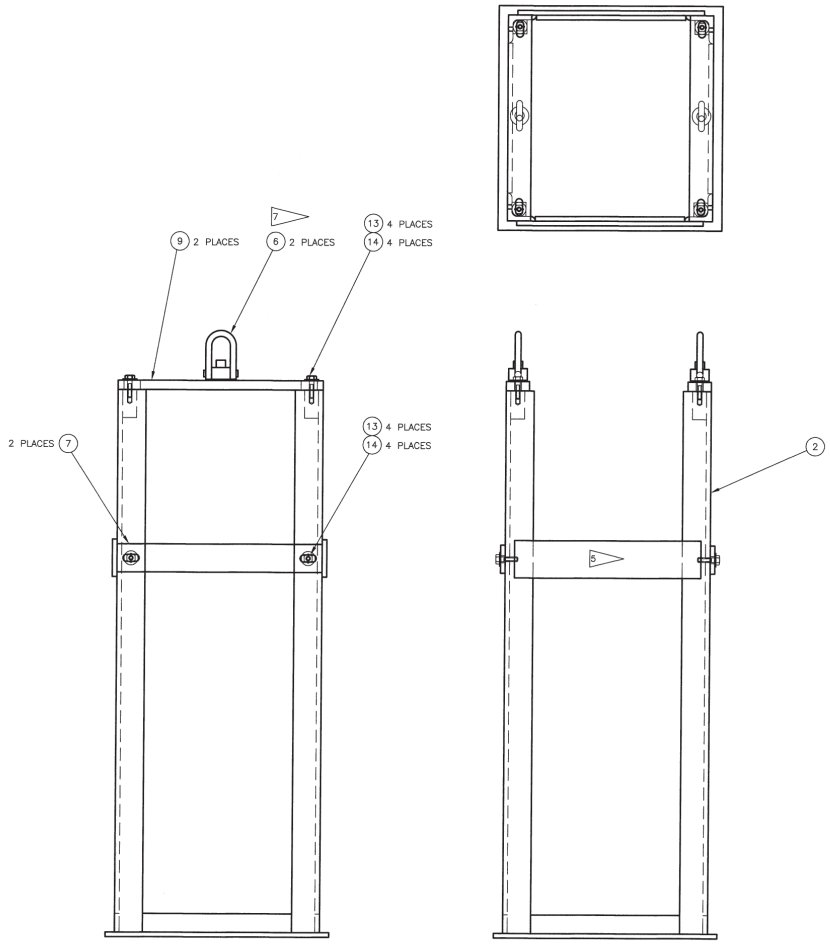

1 FILTER LIFT CAGE ASSEMBLY
SCALE: 1/4"=1"

PARTS LIST/MATERIAL LIST

QTY REQD -030	QTY REQD -020	QTY REQD -010	PARTS / DASH NUMBER	NOMENCLATURE/DESCRIPTION	MATERIAL/REFERENCE	SHEET	ITEM NO
		X	-010	FILTER LIFT CAGE ASSEMBLY		1	1
	X		-020	FILTER LIFT CAGE WELDMENT		2	2
							3
							4
							5
		2	46102	SWIVEL HOIST RING, 5/16-18UNC 800 LBS WORKING LOAD LIMIT	ACTEK	1	6
		2	-001	SAFETY BAR, PLATE, 1/2" THK	ASTM A36	2	7
	4		-002	BOLT PLATE, 1 1/2" THK	ASTM A36	2	8
		2	-003	SPREADER BAR, PLATE, 1/2" THK	ASTM A36	2	9
	1			PLATE, 1/4" THK X 12" X 12"	ASTM A36	2	10
	2			PLATE OR BAR, 1/4" THK X 2"W X 10"L	ASTM A36	2	11
	AR			ANGLE, 1 1/2" X 1 1/2" X 1/4"	ASTM A36	2	12
		8		BOLT, 1/4-20UNC-2A X 1" L	ASTM A307 OR SAE J429 GR 2	1	13
		8		FLAT WASHER, 1/4"	ANY GRADE CS	1	14
	2			PLATE OR BAR, 1/4" THK X 1"W X 8"L	ASTM A36	2	15

JUN 19 2008
DATE:
STA. 3
NATIONAL ENGINEERING SERVICES

DWG NO	TITLE
H-14-107502	DRAWING TREE

DRAWING TRACEABILITY LIST

REF NUMBER	TITLE
NEXT USED ON H-14-107505	REFERENCES

REV NO	DESCRIPTION	REV BY DATE	ENGR COMPANY
	REVISIONS		

NAME	DATE	COMPANY
DRAWN BY JT FOSS		
ENGINEER		
CHECKED		
APVD		

U.S. DEPARTMENT OF ENERGY
Office of River Protection

FILTER LIFT CAGE ASSEMBLY

SIZE F | BLDG NO 241G | INDEX NO 8409 | DWG NO H-14-107513 | REV 0
SCALE AS SHOWN | EDT 822753 | SHEET 1 OF 2
32064 | DOE_TB_F.DWG (01-01)

REV 0 | SH 1 OF 2 | DWG NO H-14-107513