PARTS LIST				
QTY	PART OR IDENTIFYING NO.	NOMENCLATURE/DESCRIPTION	MATERIAL SPECIFICATION	ITEM
1		PLATE, 4' X 4'-2" X 1/2" THK	ASTM A36	1
1		(HORIZONTAL) TUBE, SQUARE, 3 1/2" X 3 1/2" X 5/16 THK	ASTM A500, GR. B	2
3		(SHORT) TUBE. SQUARE, 3 1/2" X 3 1/2" X 5/16" THK	ASTM A500, GR. B	3
2		(VERTICAL) TUBE, SQUARE, 3 1/2" X 3 1/2" X 5/16" THK	ASTM A500, GR. B	4
2		(ANGLED) TUBE, SQUARE, 3 1/2" X 3 1/2" X 5/16" THK	ASTM A500, GR. B	5
2		CAP-1, FLAT BAR, 3 1/4" X 3 1/4" X 1/2" THK	ASTM A36	6
2	CROSBY S-279 STOCK NO 9900217 OR EQUIV	EYEBOLT, FORGED MACHINERY, 1/2" X 1-1/2"		7
2		CAP-2, FLAT BAR, 2-13/16" X 2-13/16" X 1/8" THK	ASTM A36	8
3		CAP-3, FLAT BAR, 3 1/4" X 3 1/4" X 1/4" THK	ASTM A36	9

GENERAL NOTES:

1. UNLESS OTHERWISE SPECIFIED, DIMENSIONS ARE IN FEET AND INCHES. UNLESS OTHERWISE SPECIFIED, DIMENSIONING AND TOLERANCES SHALL BE IN ACCORDANCE WITH ASTM STANDARDS.
2. BREAK AND DEBUR ALL SHARP EDGES.
3. OTHER TYPES OF CARBON STEEL MAY BE SUBSTITUTED FOR ASTM A36 PROVIDED THE MECHANICAL PROPERTIES ARE EQUIVALENT OR BETTER.
4. WELDING, WELD PROCEDURES, WELD QUALIFICATIONS AND WELD INSPECTIONS TO BE IN ACCORDANCE WITH AWS STANDARD D1.1-02. ALL WELDS SHALL BE EXAMINED VISUALLY AND SHALL MEET AWS D1.1 ACCEPTANCE CRITERIA.
5. THE BULKHEAD SHALL RECEIVE A MID-PERFORMANCE COATING WHICH PROTECTS THE SUBSTRATE FROM CORROSION. THE SUBSTRATE SHALL BE SEPARATED PER THE COATING MANUFACTURER'S RECOMMENDATIONS, COMMERCIAL BLAST CLEANING PER SSPC-SP6 OR BUYER-APPROVED EQUIVALENT. THE PRIMER (IF APPLICABLE) SHALL MEET THE COATING MANUFACTURER'S RECOMMENDATIONS. THE FOLLOWING PRODUCTS ARE CAPABLE OF MEETING THE SUBJECT REQUIREMENTS OR BUYER-APPROVED EQUIVALENT: AMERLOCK 400-HIGH-SOLIDS EPOXY, BAR-RUST 235 OR 236 MULTIPURPOSE EPOXY, CARBOMASTIC 801 OR 15 LOW ODOR, SHERWIN-WILLIAMS MACROPOXY 646 OR EQUIVALENT. THE SELLER SHALL PROVIDE PRODUCT MATERIAL SAFETY DATA SHEETS (MSDS). THE COATINGS SHALL BE ALLOWED TO CURE COMPLETELY PER THE COATING MANUFACTURER'S RECOMMENDATIONS PRIOR TO SHIPPING THE BULKHEAD.
6. BULKHEAD STEEL CRIBBING WEIGHT: (KG): 193 (LB): 425

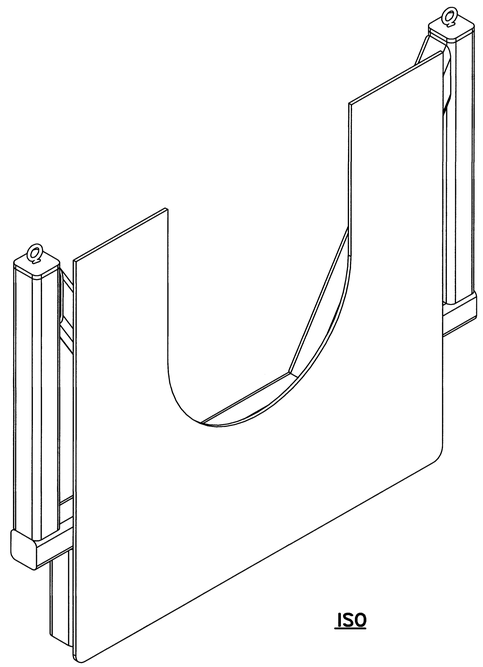

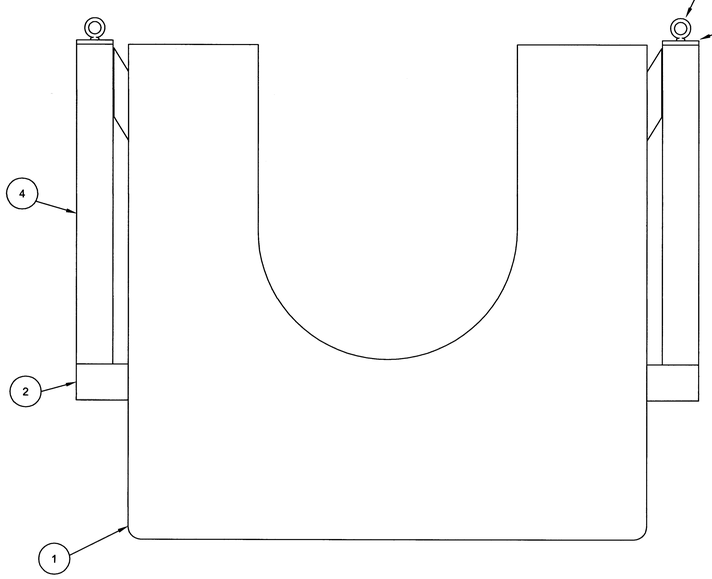

FRONT VIEW

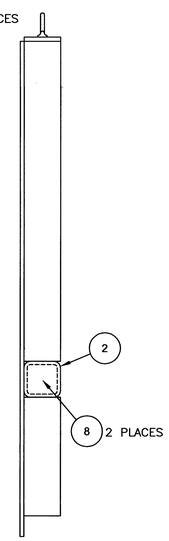

SIDE VIEW

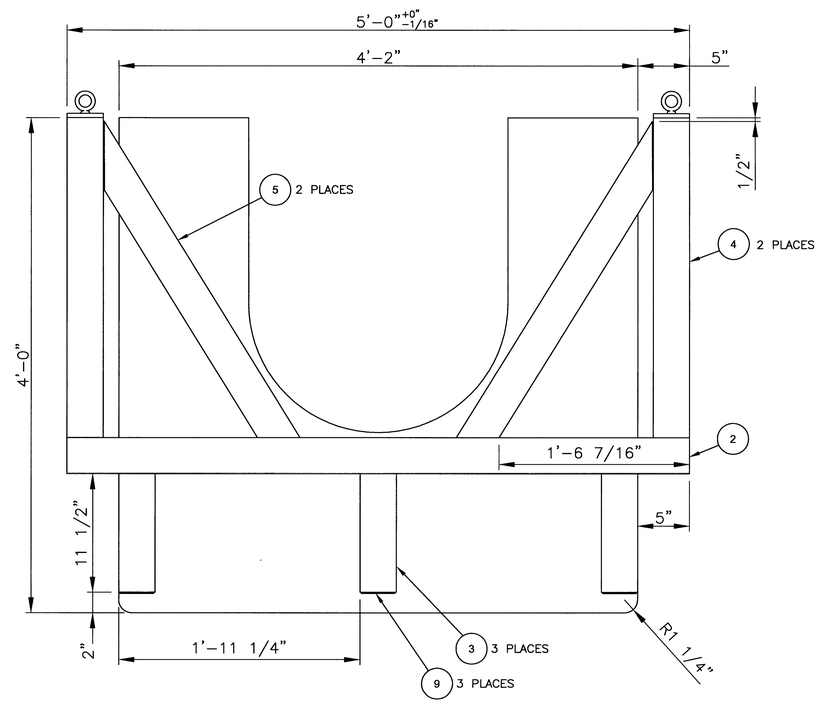

BACK VIEW

NOTE:
THIS DRAWING WAS PRODUCED FROM DURATEK DRAWING E-D-041 AND DOCUMENTS THE FABRICATION OF THE 60 FT TYPE A CONTAINER #WC74279. FOR THE FULL VENDOR FILE, SEE VI FILE #50534, 60' LONG LENGTH COMTAMINATED EQUIPMENT PACKAGE. AS PER RPP-29212, REV 0.

SEP 27 2011 DATE: STA: 4 HANFORD RELEASE ID: 11

DWG NO	TITLE	REF NUMBER	TITLE
DRAWING TRACEABILITY LIST		REFERENCES	
		NEXT USED ON H-14-109324	

REV NO	DESCRIPTION	REV BY DATE	DRAFTING APRVD	ENGR COMPANY
S				
RS 1	DIRECT REV PER ECN-11-001411	AW KRONER 07/11	RN KYLE 8/14/07	9/11/11 M.A. Hoq WRPS

REVISIONS

NAME	DATE	COMPANY
DRAWN BY AW Kroner	1/18/11	WRPS
CONT. CHECK RN Kyle		WRPS
SEE REVISION 0		
ENGINEER J.H. Szymeczek		WRPS

U.S. DEPARTMENT OF ENERGY
Office of River Protection

60 FT TYPE A CONTAINER BULKHEAD STEEL CRIBBING

SIZE	BLDG NO	INDEX NO	DWG NO	REV
F	241G	1001	H-14-109322	1
SCALE NONE	EDT 824357	SHEET 1 OF 3		

1226 DOE_TB_F.DWG (01-01)

DWG NO H-14-109322 SH 1 OF 3 REV 1