GENERAL NOTES (CONT'D):

11. REQUIRED TEMPERATURE RANGE FOR SEAL MATERIALS −40°C (−40°F) TO 70°C (158°F).

12. STENCIL WITH PERMANENT MARKING "VERTICAL LIFTING ONLY" IN ONE−INCH HIGH BLACK CHARACTERS NEXT TO EACH OF THE FOUR CONTAINER LIFTING LUGS (ITEM 4).

13. SEE BOTTOM VIEW ON SHEET 2 FOR LOCATION OF TANDEMLOC CORNER FITTINGS. ORIENT THE CORNER FITTING RADIUS AWAY FROM THE WEB OF THE I−BEAM (ITEM 1).

14. OPTION: FABRICATOR MAY DRILL AND TAP 3/4−16 UNF HOLE THROUGH FLANGE. INSTALL THREADED PLUG, MAINTAINING 5/16 INCH DEPTH OF THREAD, AND GRIND/BLEND FLUSH WITH SURFACE OF FLANGE (ITEM 8 OR 9). APPLY THREADLOCKER (LOCTITE 271, FEL−PRO PRO LOCK OR EQUIVALENT) TO THREADED PLUG. THE ENDS OF THE BOLTS MAY BE SHORTENED IF REQUIRED TO FACILITATE THE INSERTION OF THE PLUG IN THE TOP OF THE FLANGE.

15. GRIND THE TOP STRIP (ITEM 28) OF THE POCKET ASSEMBLY AS REQUIRED SO IT IS FLUSH WITH THE BOTTOM SURFACE OF THE FLANGE (ITEMS 9 OR 10) AND PERMITS FLUSH MOUNTING OF THE SEAL CLAMPS (ITEM 11). IF THE TOP STRIP OF THE POCKET IS GROUND COMPLETELY AWAY, THEN ANOTHER WELD MUST BE PLACED ON TOP OF THE STRIP TO SEAL AND RE−CONNECT THE STRIP TO THE FLANGE.

16. THE CONTAINER BASE ASSEMBLY, SERIAL NUMBER LLCE−1, HAS A NCR, PFF−NCR−06−029, ON DIMENSIONAL TOLERANCES.

GENERAL NOTES (CONT'D):

6. USE THE PSA ADHESIVE TO JOIN THE SEAL (ITEMS 20 AND 21) TO THE GROOVE (ITEMS 15 AND 16). MINIMIZE THE NUMBER OF JOINTS ON A SIDE BY USING THE LONGEST MATERIAL POSSIBLE. APPLY A VENDOR−RECOMMENDED ADHESIVE/CONTACT CEMENT TO ALL BUTT JOINTS (CORNERS AND SIDE SPLICES).

7. FOR INSTALLATION OF SEAL CLAMP (ITEM 11), TIGHTEN SCREW (ITEM 14) SNUG TIGHT. THREADLOCKER (LOCTITE 243 OR EQUIVALENT) WILL BE USED TO SECURE SEAL CLAMPS (ITEM 11) TO FLANGE (ITEMS 9 OR 10).

8. SEAL CLAMP (ITEM 11) OPERATION: FOR PROPER SEAL COMPRESSION, TIGHTEN UNTIL THE LID FLANGE TO BASE ASSEMBLY FLANGE SEPARATION DISTANCE IS NO GREATER THAN 1/4 INCH. DO NOT EXCEED TORQUE OF 50 FT−LBS.

9. PRIOR TO PAINTING, CAULK (INDUSTRIAL GRADE) ALL NON−WELDED JOINTS OR SEAMS ON THE BASE ASSEMBLY TO PREVENT MOISTURE INGRESS WHICH MAY CAUSE CORROSION.

10. IDENTIFY CONTAINER BASE WITH THE FOLLOWING INFORMATION USING 1−INCH TO 1−1/2 INCH HIGH BLACK CHARACTERS ON THE UPPER LEFT CORNER OF BOTH LONG SIDES:

MAXIMUM GROSS WEIGHT	(KG):	21,843
	(LB):	48,155
TARE WEIGHT	(KG):	18,214
(INCLUDES LID AND BULKHEAD)	(LB):	40,155
BASE WEIGHT	(KG):	12,991
(BULKHEAD WEIGHT NOT INCLUDED)	(LB):	28,640

USA DOT 7A TYPE A
RADIOACTIVE MATERIAL
SERIAL NUMBER:
CHG/FY06/CONTRACT#/RELEASE#
P.O. NUMBER
LID CLOSURE TORQUE: 45 − 50 FT−LB

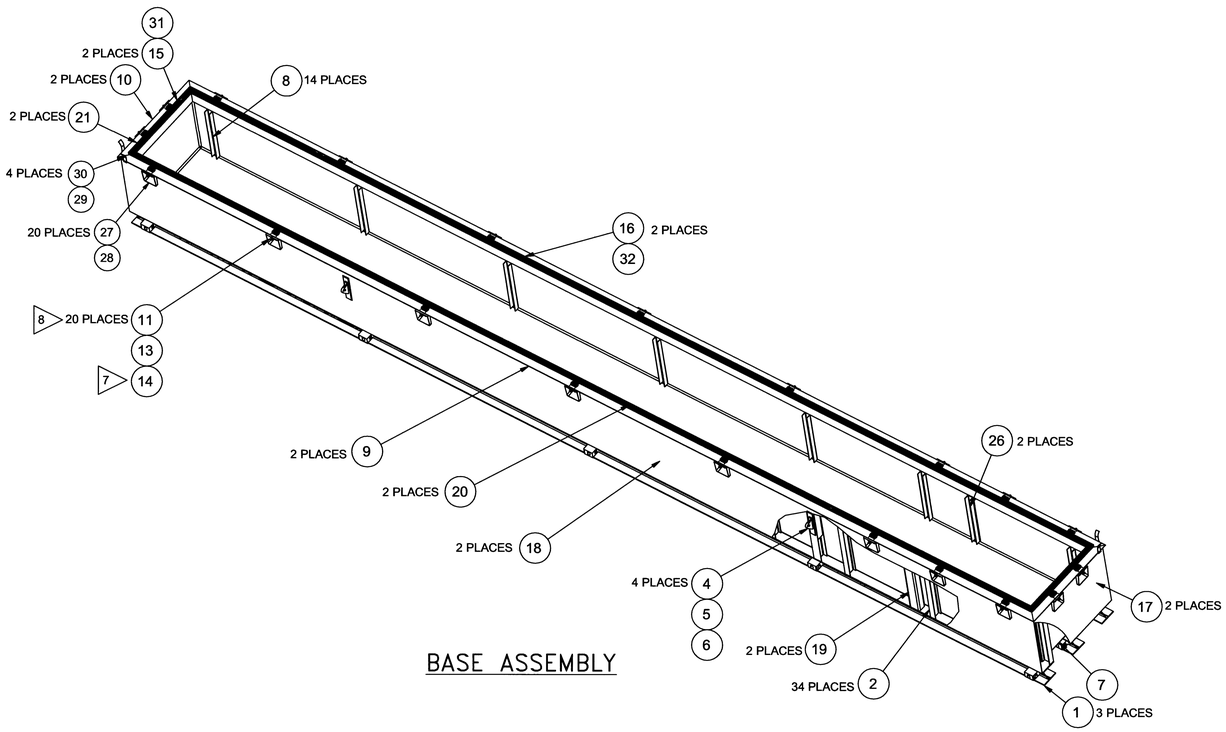

BASE ASSEMBLY

PARTS LIST

QTY	PART OR IDENTIFYING NO.	NOMENCLATURE/DESCRIPTION	MATERIAL SPECIFICATION	ITEM
3		BEAM, W12 X 65	ASTM A572/A992, GR 50,	1
34		BEAM, W 6 X 12	ASTM A572/A992, GR 50,	2
32		PLATE	ASTM A36 ,10-7/8" X 30-1/8" X 1/2" THK	3
4		LIFTING LUG	ASTM A36 , 1-1/2" THK	4
4		PLATE	ASTM A36 , 21" X 4" X 1/2" THK	5
4		BEAM, W 6 X 15	ASTM A572/A992, GR 50	6
1		CONTAINMENT	ASTM A1011, SS GR 30 TYPE 1, SHEET, 10 GAUGE THK	7
14		CRIBBING SUPPORT	ASTM A36 , PLATE 3/16" THK	8
2		FLANGE, LONG	ASTM A36 , ANGLE 8" X 8" X 1/2" THK	9
2		FLANGE, SHORT	ASTM A36 , ANGLE 8" X 8" X 1/2" THK	10
20	TANDEMLOC K08A00A-1GA	SEAL CLAMP		11
		NOT USED		12
80	MCMASTER-CARR 92415A174	SPACER	STEEL, ZINC-PLATED, 0.755" ID X 1-1/2" OD X 1-1/2" L	13
80		SCREW, HEX HEAD CAP	ASTM A307 GR A OR B, ZINC-PLATED, 3/4-16UNF-2A X 2-1/2" LONG	14
2		GROOVE, SHORT	ASTM A36 , PLATE 3/8" THK X 10" WIDE	15
2		GROOVE, LONG	ASTM A36 , PLATE 3/8" THK X 10" WIDE	16
2		SKIN, END	ASTM A1011, SS GR 30, SHEET 10 GAUGE THK	17
2		SKIN, SIDE	ASTM A1011, SS GR 30, SHEET 10 GAUGE THK	18
2		RECT. TUBE	ASTM A500 GR B, 8" X 6" X 1/2" THK	19
11 2		SEAL, LONG	ASTM D 1056, 2A0, 1" THK X 2" WIDE, PSA ONE SIDE	20
11 2		SEAL, SHORT	ASTM D 1056, 2A0, 1" THK X 2" WIDE, PSA ONE SIDE	21
16		SUPPORT PLATE - 1	ASTM A36, PLATE, 2-1/8" X 5-7/16" X 1/4" THK	22
8		SUPPORT PLATE - 2	ASTM A36, PLATE, 30" X 5-7/16" X 1/4" THK	23
13 6	TANDEMLOC 243000C-BL	CORNER FITTING - LEFT		24
13 6	TANDEMLOC 243000C-BR	CORNER FITTING - RIGHT		25
2		BULKHEAD SUPPORT CHANNEL	ASTM A36 , 3/16" THK	26
20		SHEET	ASTM A1011, SS GR 30, SHEET 10 GAUGE THK	27
20		SHEET	ASTM A1011, SS GR 30, SHEET 10 GAUGE THK	28
4		GUIDE PLATE HOLDER	ASTM A36 , 1/4" THK	29
4		GUIDE PLATE	ASTM A1011, SS GR 30, SHEET 10 GAUGE THK	30
2		SHIM PLATE, SHORT	ASTM A36 , 2" WIDE X 1/8" THICK X AR LENGTH	31
2		SHIM PLATE, LONG	ASTM A36 , 2" WIDE X 1/8" THICK X AR LENGTH	32

GENERAL NOTES:

1. UNLESS OTHERWISE SPECIFIED, DIMENSIONS ARE IN FEET AND INCHES. UNLESS OTHERWISE SPECIFIED, DIMENSIONING AND TOLERANCES SHALL BE IN ACCORDANCE WITH ASTM STANDARDS.

2. BREAK AND DEBUR ALL SHARP EDGES.

3. PARTS THAT ARE LONG IN LENGTH MAY BE FABRICATED FROM MULTIPLE PIECES. SIDE, END AND BOTTOM SHEETS MAY ALSO BE FABRICATED FROM MULTIPLE PIECES. JOINING MULTIPLE PIECES MUST BE PERFORMED AS SHOWN ON SHEET 4. OTHER TYPES OF CARBON STEEL MAY BE SUBSTITUTED FOR ASTM A36 OR ASTM A1011 PROVIDED THE MECHANICAL PROPERTIES ARE EQUIVALENT OR BETTER.

4. WELDING, WELD PROCEDURES, WELD QUALIFICATIONS AND WELD INSPECTIONS TO BE IN ACCORDANCE WITH AWS STANDARD D1.1−02. ALL WELDS SHALL BE EXAMINED VISUALLY AND SHALL MEET AWS D1.1 ACCEPTANCE CRITERIA. CONTAINMENT BOUNDARY WELDS SHALL ALSO BE INSPECTED BY LIQUID PENETRANT OR MAGNETIC PARTICLE EXAMINATION IN ACCORDANCE WITH ASME SECTION V 2004 AND SHALL MEET AWS D1.1 ACCEPTANCE CRITERIA. CONTAINMENT BOUNDARY WELDS ARE IDENTIFIED BY "C.B." IN THE WELD CALLOUT TAIL.

5. BASE INTERIOR AND EXTERIOR SHALL RECEIVE A MID−PERFORMANCE COATING WHICH PROTECTS THE SUBSTRATE FROM CORROSION. THE SUBSTRATE SHALL BE PREPARED PER THE COATING MANUFACTURER RECOMMENDATIONS, COMMERCIAL BLAST CLEANING PER SSPC−SP6 OR BUYER−APPROVED EQUIVALENT. THE PRIMER (IF APPLICABLE) SHALL MEET THE COATING MANUFACTURER'S RECOMMENATIONS. THE FOLLOWING PRODUCTS ARE CAPABLE OF MEETING THE SUBJECT REQUIREMENTS OR BUYER−APPROVED EQUIVALENT: AMERLOCK 400−HIGH−SOLIDS EPOXY, BAR−RUST 235 OR 236 MULTI PURPOSE EPOXY, CARBOMASTIC 801 OR 15 LOW ODOR, SHERWIN−WILLIAMS MACROPOXY 646 OR EQUIVALENT. A URETHANE ENAMEL TOPCOAT, DEVTHANE 379UVA OR BUYER−APPROVED EQUIVALENT, SHALL BE APPLIED TO THE EXTERIOR SURFACES ONLY. THE SELLER SHALL PROVIDE PRODUCT MATERIAL SAFETY DATA SHEETS (MSDS). THE COATINGS SHALL BE ALLOWED TO CURE COMPLETELY PER THE COATING MANUFACTURER RECOMMENDATIONS PRIOR TO SHIPPING THE BASE ASSEMBLY.

NOTE:
THIS DRAWING WAS PRODUCED FROM DURATEK DRAWING E−D−041 AND DOCUMENTS THE FABRICATION OF THE 60 FT TYPE A CONTAINER #WC74279. FOR THE FULL VENDOR FILE, SEE VI FILE #50534, 60' LONG LENGTH COMTAMINATED EQUIPMENT PACKAGE. AS PER RPP−29212, REV 0.

SEP 27 2011
DATE:
STA: 4
HANFORD RELEASE
ID: 11

DWG NO	TITLE
DRAWING TRACEABILITY LIST	

REF NUMBER	TITLE
REFERENCES	
NEXT USED ON H−14−109324, SH 1	

REV NO	DESCRIPTION	REV BY DATE	DRAFTING APRVD	ENGR	COMPANY
S 1	DIRECT REV PER ECN−11−001411	AW KRONER 07/11	RN KYLE		WRPS

REVISIONS

NAME	DATE	COMPANY
DRAWN BY AW Kroner	1/18/11	WRPS
DSIGN VRFIED RN Kyle		WRPS
SEE REVISION 0		
ENGINEER J.H. Szymeczek		WRPS

U.S. DEPARTMENT OF ENERGY
Office of River Protection

60 FT TYPE A CONTAINER BASE ASSEMBLY

SIZE	BLDG NO	INDEX NO	DWG NO	REV
F	241G	1001	H−14−109323	1
SCALE NONE		EDT 824357	SHEET 1 OF 8	

10984 DOE_TB_F.DWG (01−01)

DWG NO H−14−109323 SH 1 OF 8 REV 1