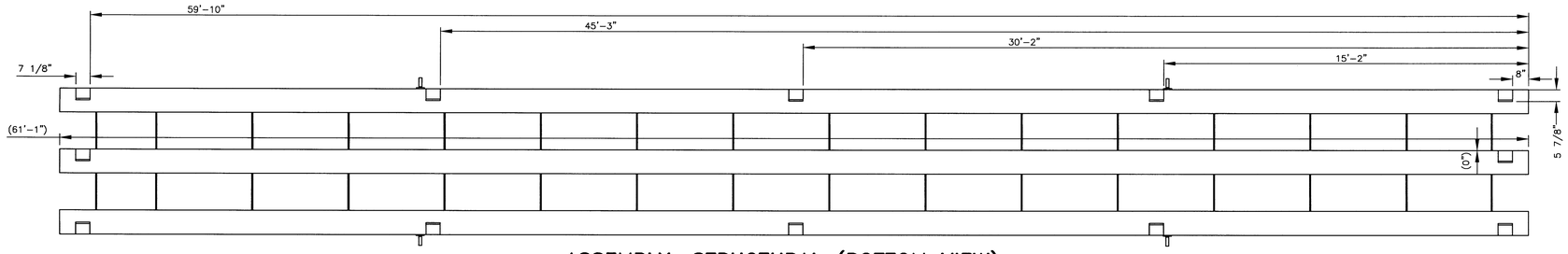

ASSEMBLY, STRUCTURAL (BOTTOM VIEW)
(ITEMS 24 AND 25 NOT SHOWN)

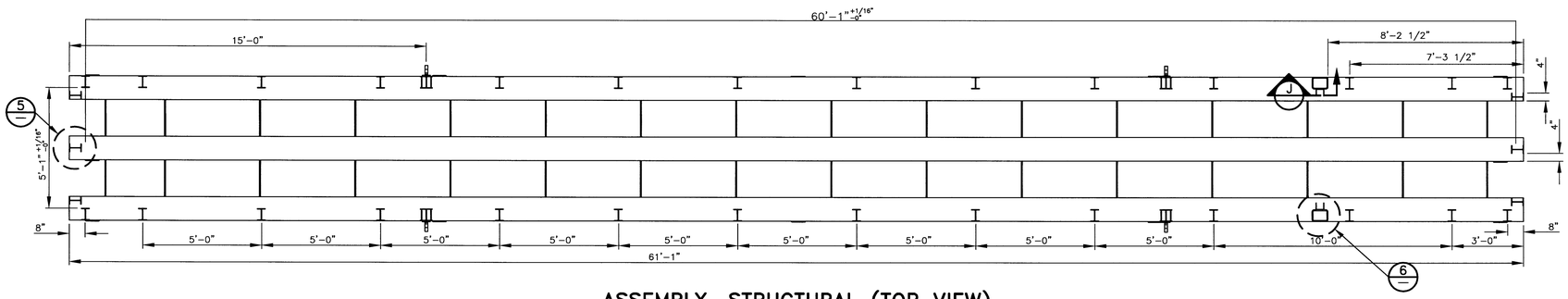

ASSEMBLY, STRUCTURAL (TOP VIEW)

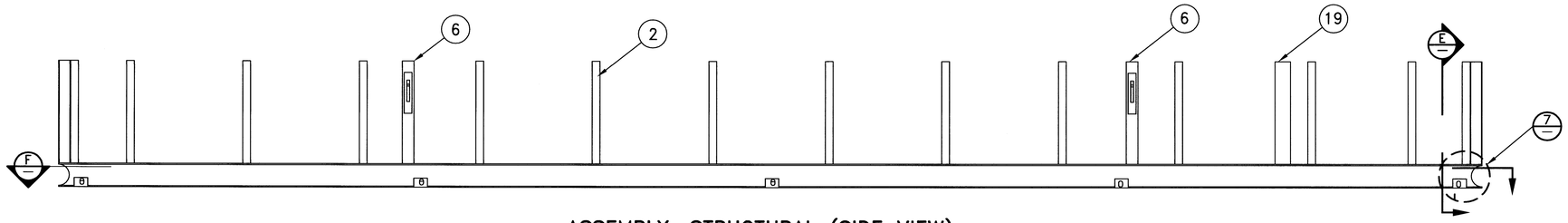

ASSEMBLY, STRUCTURAL (SIDE VIEW)

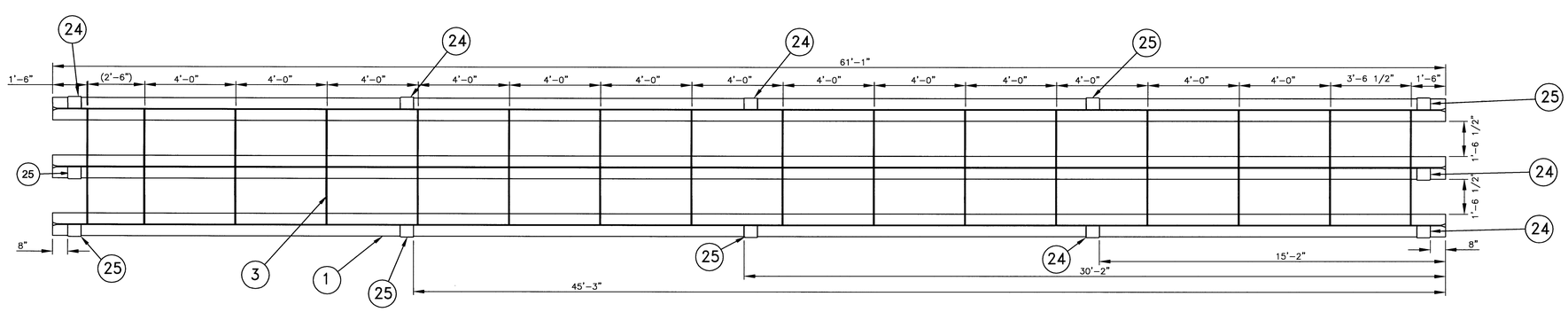

F SECTION
SCALE: NTS

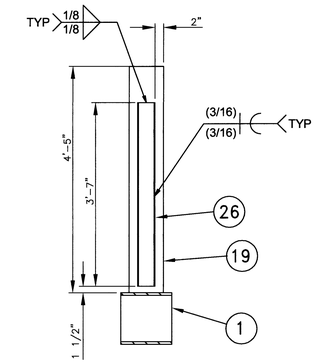

J SECTION
SCALE: NTS

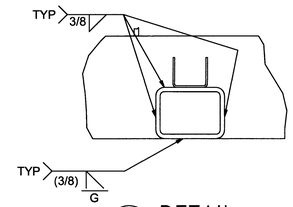

6 DETAIL
SCALE: NTS

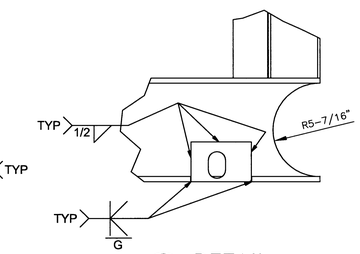

7 DETAIL
SCALE: NTS

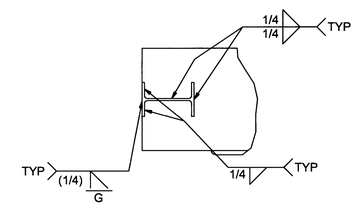

5 DETAIL
SCALE: NTS

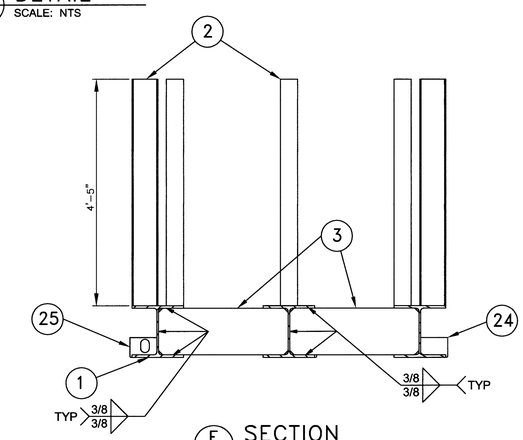

E SECTION
SCALE: NTS

NOTE:
THIS DRAWING WAS PRODUCED FROM DURATEK DRAWING E-D-041 AND DOCUMENTS THE FABRICATION OF THE 60 FT TYPE A CONTAINER #WC74279. FOR THE FULL VENDOR FILE, SEE VI FILE #50534, 60' LONG LENGTH COMTAMINATED EQUIPMENT PACKAGE. AS PER RPP-29212, REV 0.

SEP 27 2011
DATE: STA: 4 HANFORD RELEASE ID: 11

DWG NO	TITLE	REF NUMBER	TITLE
DRAWING TRACEABILITY LIST		REFERENCES	
		NEXT USED ON H-14-109323 SH 1	

REV REL	REV NO	DESCRIPTION	REV BY DATE	DRAFTING APRVD	ENGR COMPANY
S	RS 1	DIRECT REV PER ECN-11-001411	AW KRONER 07/11	RN KYLE 1/18/11	M.A. HAQ WRPS

REVISIONS

NAME	DATE	COMPANY
DRAWN BY AW Kroner	1/18/11	WRPS
Draft Check RN Kyle		WRPS
SEE REVISION 0		
ENGINEER J.H. Szymeczek		WRPS

U.S. DEPARTMENT OF ENERGY
Office of River Protection

60 FT TYPE A CONTAINER
BASE ASSEMBLY

SIZE	BLDG NO	INDEX NO	DWG NO	REV
F	241G	1001	H-14-109323	1
SCALE NONE	EDT 824357	SHEET 4 OF		

3106 DOE_TB_F.DWG (01-01)

DWG NO H-14-109323 SH 4 OF REV 1