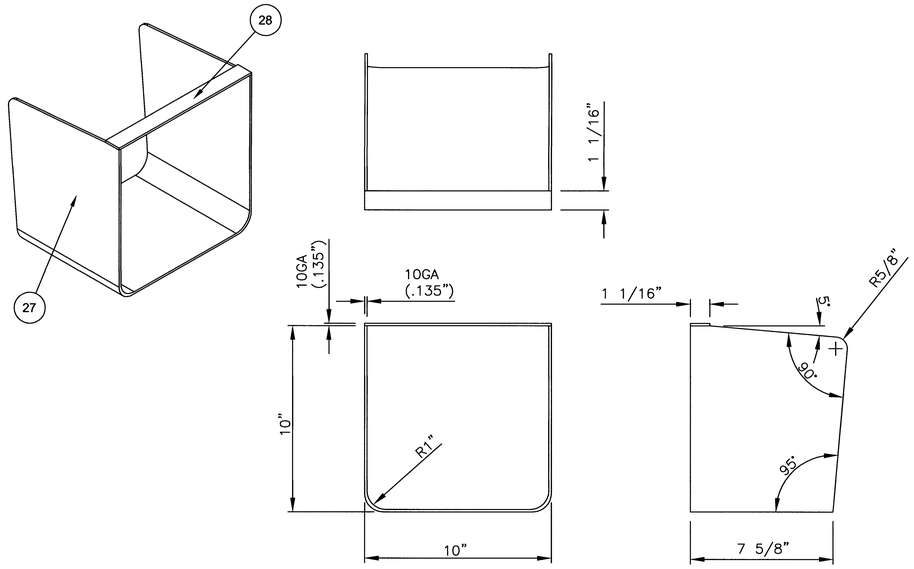

TANDEMLOCK POCKET ASSEMBLY

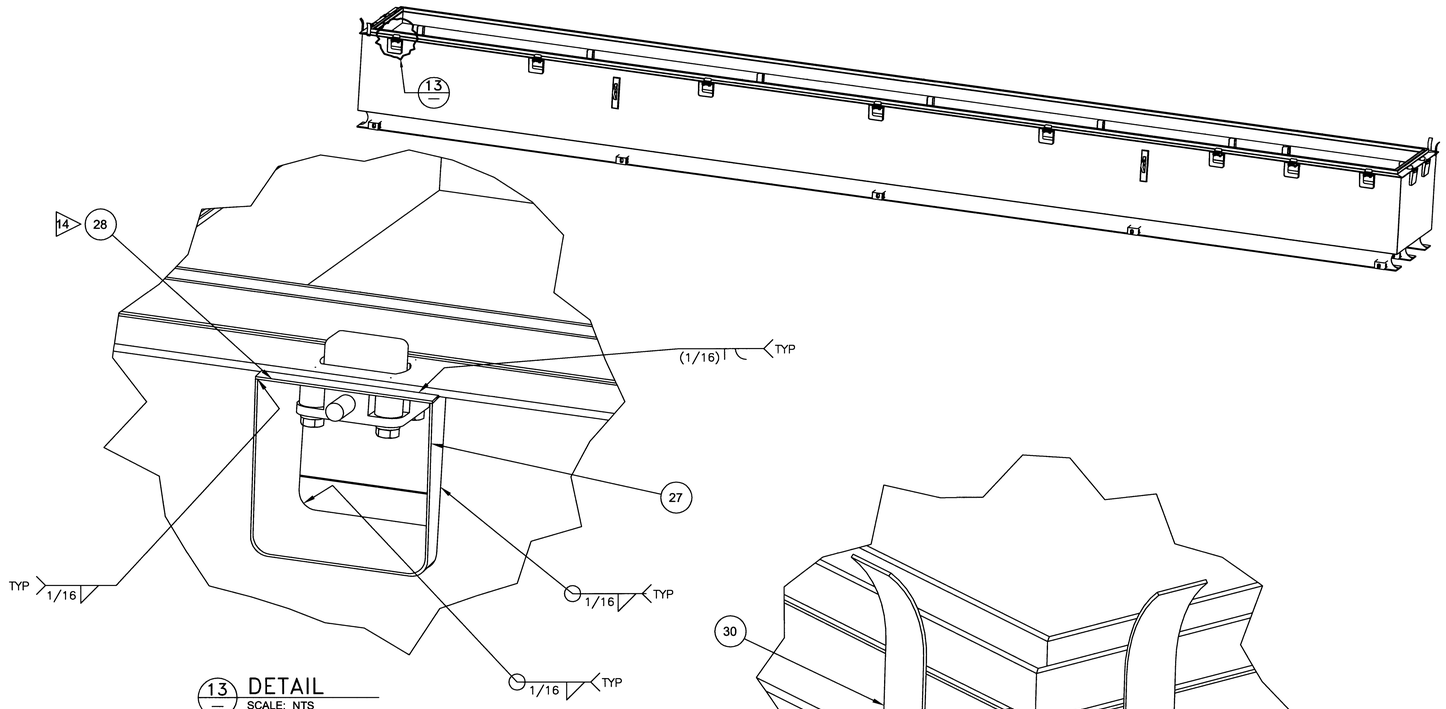

13 DETAIL
SCALE: NTS

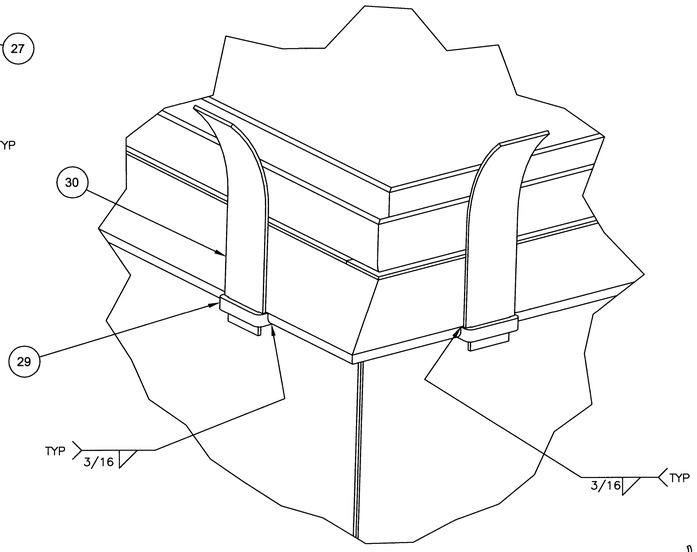

14 DETAIL
SCALE: NTS

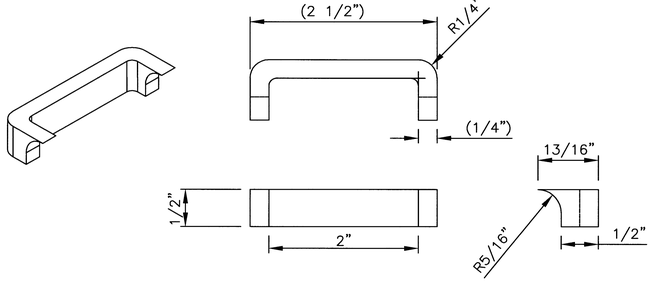

29 GUIDE PLATE HOLDER

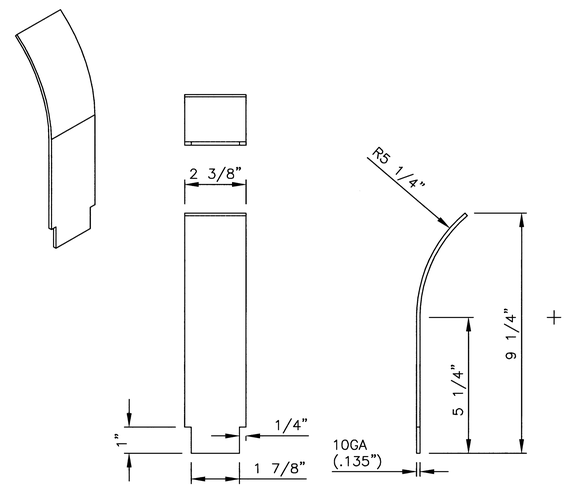

30 GUIDE PLATE

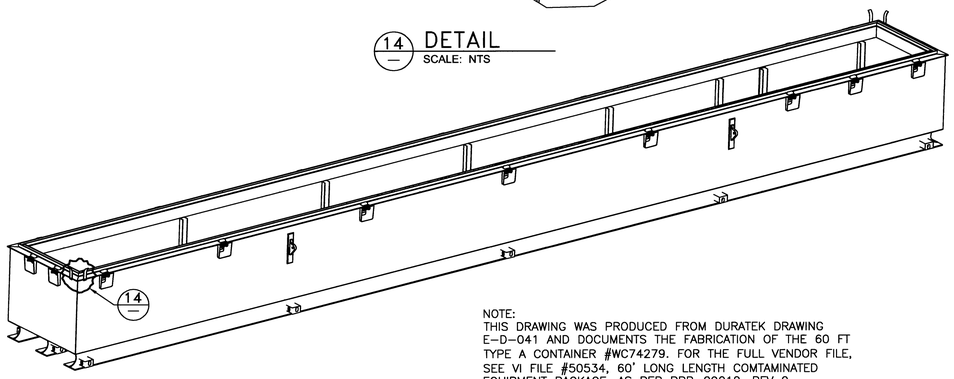

NOTE:
THIS DRAWING WAS PRODUCED FROM DURATEK DRAWING E-D-041 AND DOCUMENTS THE FABRICATION OF THE 60 FT TYPE A CONTAINER #WC74279. FOR THE FULL VENDOR FILE, SEE VI FILE #50534, 60' LONG LENGTH COMTAMINATED EQUIPMENT PACKAGE. AS PER RPP-29212, REV 0.

SEP 27 2011
DATE:
STA: 4
HANFORD RELEASE
ID: 11

DWG NO	TITLE	REF NUMBER	TITLE
DRAWING TRACEABILITY LIST		REFERENCES	
		NEXT USED ON H-14-109324	

REV NO	DESCRIPTION	REV BY DATE	DRAFTING APPRO	ENGR	COMPANY
S RS 1	DIRECT REV PER ECN-11-001411	AW KRONER 07/11	RN KYLE		WRPS
REVISIONS					

NAME	DATE	COMPANY
DRAWN BY AW Kroner	1/18/11	WRPS
DSIGN CHECK RN Kyle		WRPS
SEE REVISION 0		
ENGINEER J.H. Szymeczek		WRPS

U.S. DEPARTMENT OF ENERGY
Office of River Protection

60 FT TYPE A CONTAINER BASE ASSEMBLY

SIZE	BLDG NO	INDEX NO	DWG NO	REV
F	241G	1001	H-14-109323	1

SCALE AS SHOWN | EDT 824357 | SHEET 8 OF

18487 DOE_TB_F.DWG (01-01)

DWG NO H-14-109323 SH 8 OF REV 1