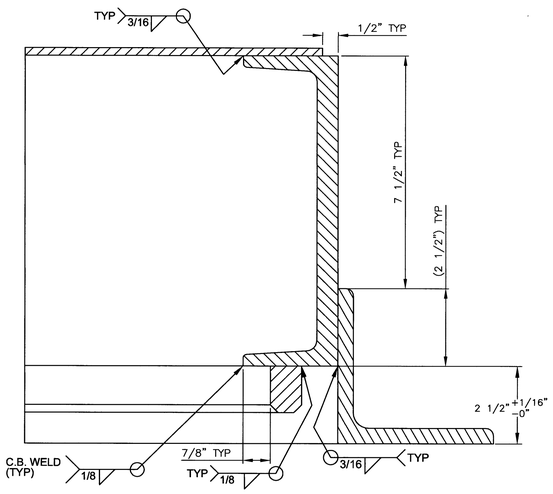

A/2 SECTION
SCALE: 1:2

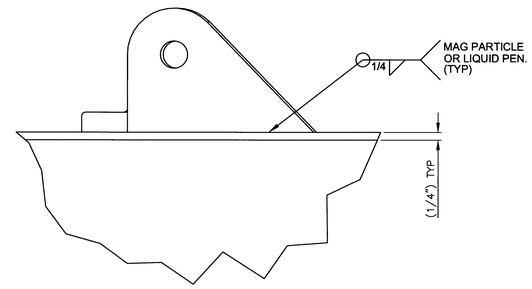

16/2 DETAIL
SCALE: 1:2

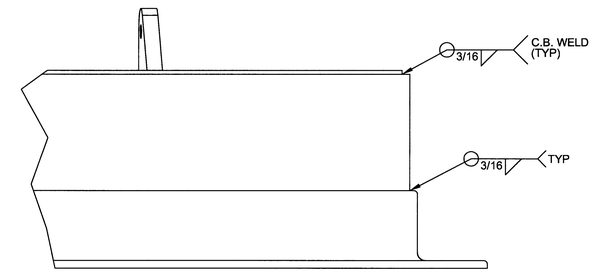

17/2 DETAIL
SCALE: 1:4

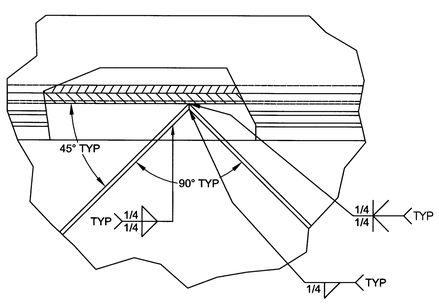

18/2 DETAIL
SCALE: 1:4

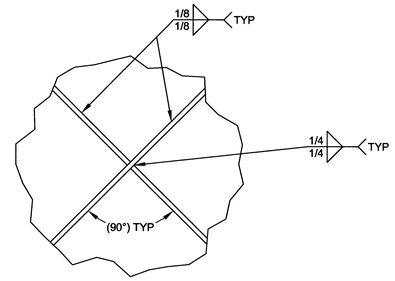

19/2 DETAIL
SCALE: 0.3:1

(TYPICAL JOINT CONFIGURATION FOR ITEM 7. LONG AND SHORT ITEM 7 POSITIONS MAY BE SWITCHED FOR EASE OF FABRICATION.)

NOTE:
THIS DRAWING WAS PRODUCED FROM DURATEK DRAWING E-D-040 AND DOCUMENTS THE FABRICATION OF THE 60 FT TYPE A CONTAINER #WC74279. FOR THE FULL VENDOR FILE, SEE VI FILE #50534, 60' LONG LENGTH CONTAMINATED EQUIPMENT PACKAGE, AS PER RPP-29212, REV 0.

SEP 27 2011 DATE: STA: 4 HANFORD RELEASE ID: 11

DWG NO	TITLE	REF NUMBER	TITLE
		REFERENCES	
DRAWING TRACEABILITY LIST		NEXT USED ON H-14--109325, SH 1	

REV NO	DESCRIPTION	REV BY DATE	DRAFTING APPRO	ENGR COMPANY
S RS 1	DIRECT REV PER ECN-11-001411	AW KRONER 09/27/11	RN KYLE 9/16	BA RAO WRPS
REVISIONS				

	NAME	DATE	COMPANY
DRAWN BY	AW Kroner	1/18/11	WRPS
DGN Check	RN Kyle		WRPS
SEE REVISION 0			
ENGINEER	J.H. Szymeczek		WRPS

U.S. DEPARTMENT OF ENERGY
Office of River Protection

60 FT TYPE A CONTAINER LID ASSEMBLY

SIZE	BLDG NO	INDEX NO	DWG NO	REV
F	241G	1001	H-14-109325	1
SCALE NONE	EDT 824357		SHEET 3 OF	

2674 DOE_TB_F.DWG (01-01)

DWG NO H-14-109325 SH 3 OF REV 1