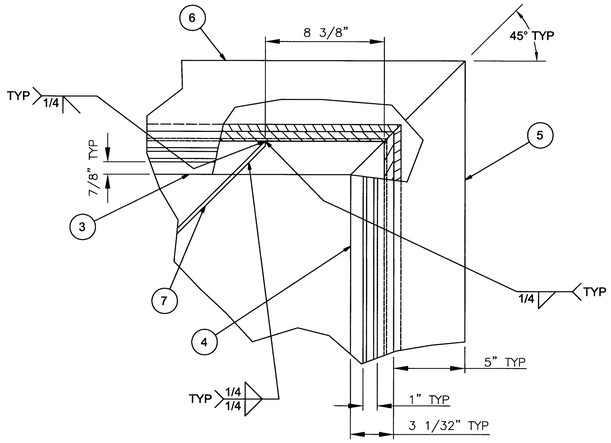

20/2 DETAIL
SCALE: 1:5

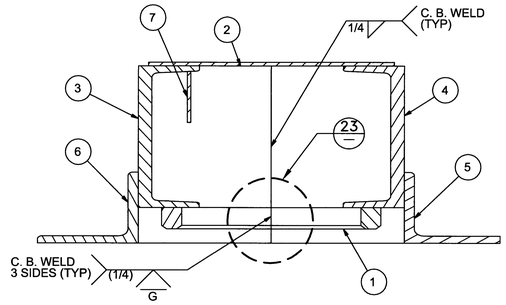

C/2 SECTION
SCALE: 1:5

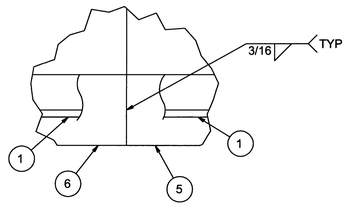

23/– DETAIL
SCALE: 0.4:1
(PORTION OF ITEM 1 NOT SHOWN FOR CLARITY.)

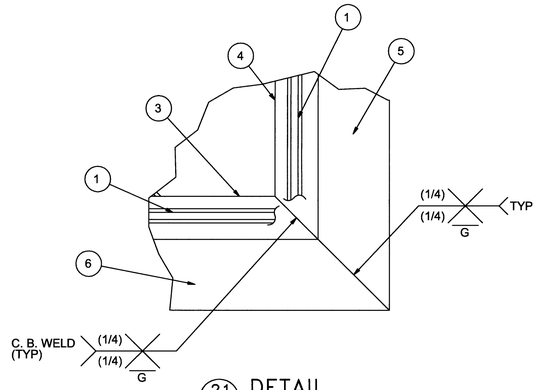

21/2 DETAIL
SCALE: 1:5
(PORTION OF ITEM 1 NOT SHOWN FOR CLARITY.)

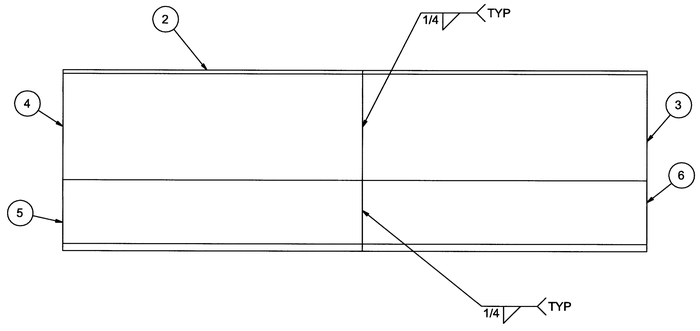

D/4 VIEW
SCALE: 1:5

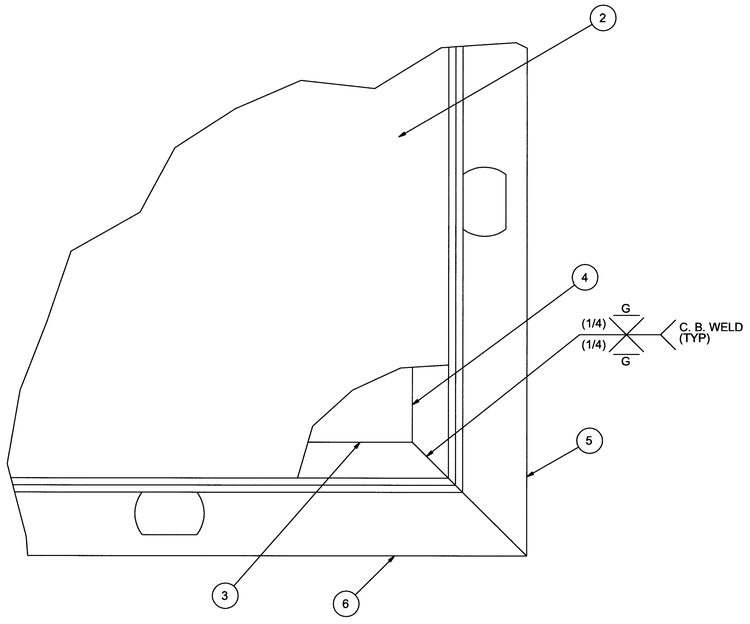

22/2 DETAIL
SCALE: 1:5

NOTE:
THIS DRAWING WAS PRODUCED FROM DURATEK DRAWING E-D-040 AND DOCUMENTS THE FABRICATION OF THE 60 FT TYPE A CONTAINER #WC74279. FOR THE FULL VENDOR FILE, SEE VI FILE #50534, 60' LONG LENGTH CONTAMINATED EQUIPMENT PACKAGE, AS PER RPP-29212, REV 0.

SEP 27 2011 DATE: STA: 4 HANFORD RELEASE ID: 11

DWG NO	TITLE	REF NUMBER	TITLE
DRAWING TRACEABILITY LIST		REFERENCES	
		NEXT USED ON H-14-109325, SH 1	

REV NO	REV BY DATE	DESCRIPTION	DRAFTING APPRO	ENGR	COMPANY
RS 1	AW KRONER 07/11/11	DIRECT REV PER ECN-11-001411	RN KYLE	J.H. Szymeczek	WRPS

REVISIONS

	NAME	DATE	COMPANY
DRAWN BY	AW Kroner	1/18/11	WRPS
PROJ ENGR	RN Kyle		WRPS
ENGINEER	J.H. Szymeczek		WRPS

SEE REVISION 0

U.S. DEPARTMENT OF ENERGY
Office of River Protection

60 FT TYPE A CONTAINER LID ASSEMBLY

SIZE	BLDG NO	INDEX NO	DWG NO	REV
F	241G	1001	H-14-109325	1
SCALE NONE	EDT 824357	SHEET 4 OF		

20737 DOE_TB_F.DWG (01-01)

DWG NO H-14-109325 SH 4 OF REV 1