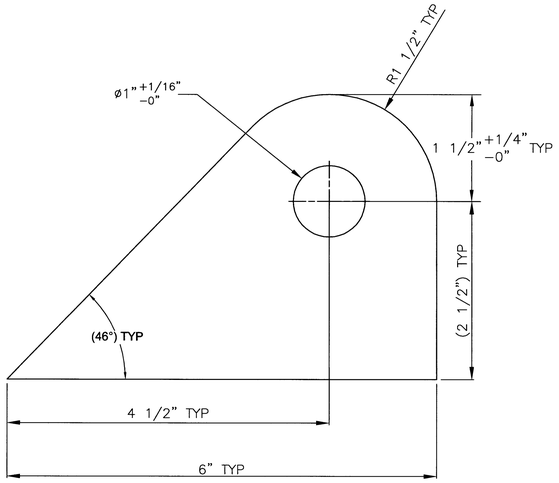

ITEM 8

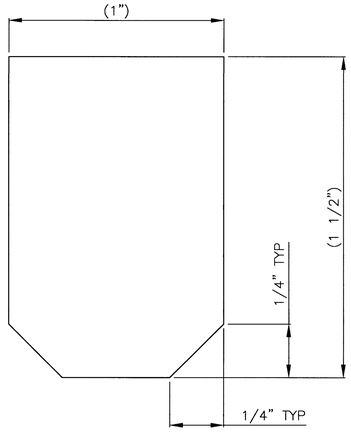

ITEM 1

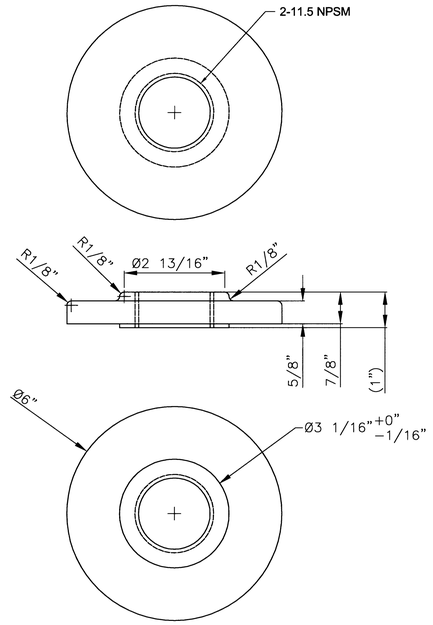

9 PLATE, FILTER FLANGE

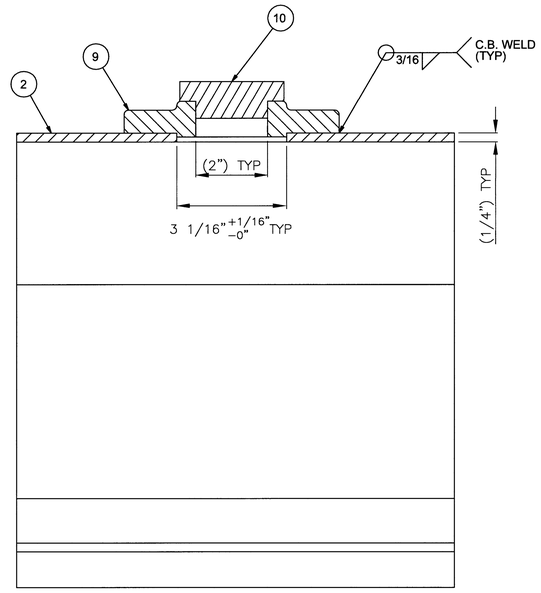

B/2 SECTION
SCALE: 1/2

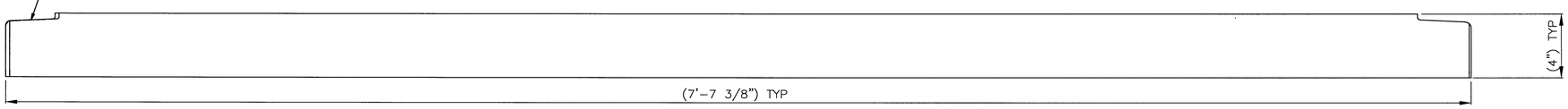

ITEM 7
(11 TOTAL)

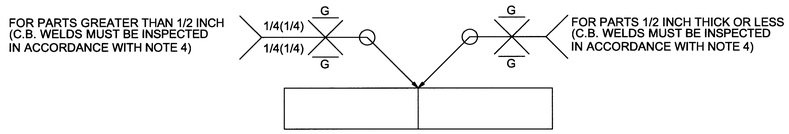

TYPICAL JOINT DESIGN FOR LONG PARTS

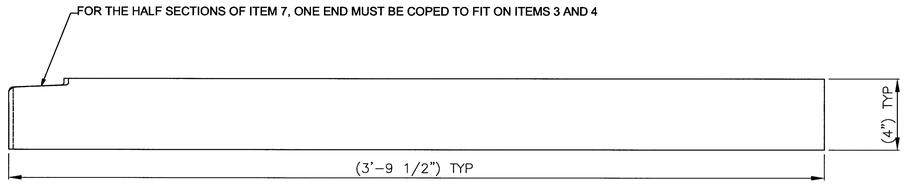

ITEM 7
(22 TOTAL)

NOTE:
THIS DRAWING WAS PRODUCED FROM DURATEK DRAWING E−D−040 AND DOCUMENTS THE FABRICATION OF THE 60 FT TYPE A CONTAINER #WC74279. FOR THE FULL VENDOR FILE, SEE VI FILE #50534, 60' LONG LENGTH CONTAMINATED EQUIPMENT PACKAGE, AS PER RPP−29212, REV 0.

SEP 27 2011
DATE:
STA:
HANFORD RELEASE
ID:
11

DWG NO	TITLE
DRAWING TRACEABILITY LIST	

REF NUMBER	TITLE
REFERENCES	
NEXT USED ON H−14−109325 SH 1	

REV REL	MFD	REV NO	DESCRIPTION	REV BY DATE	DRAFTING APR/D	ENGR	COMPANY
S	RS	1	DIRECT REV PER ECN−11−001411	AW KRONER 07/11	RN KYLE		WRPS

REVISIONS

	NAME	DATE	COMPANY
DRAWN BY	AW Kroner	1/18/11	WRPS
PROJ CHECK	RN Kyle		WRPS
SEE REVISION 0			
ENGINEER	J.H. Szymeczek		WRPS

U.S. DEPARTMENT OF ENERGY
Office of River Protection

60 FT TYPE A CONTAINER LID ASSEMBLY

SIZE	BLDG NO	INDEX NO	DWG NO	REV
F	241G	1001	H−14−109325	1
SCALE NONE	EDT 824357		SHEET 5 OF	

13547 DOE_TB_F.DWG (01−01)

DWG NO H−14−109325 SH 5 OF REV 1