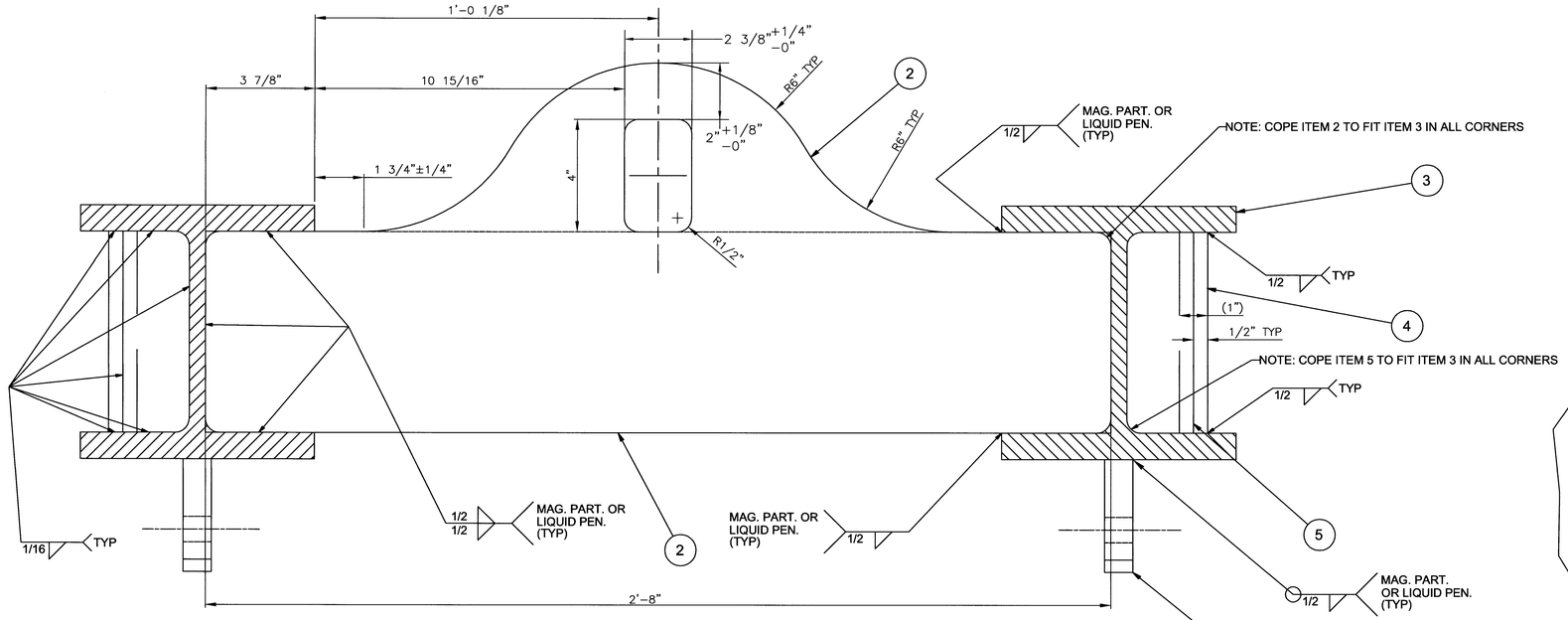

A 2 SECTION
SCALE: 0.40:1

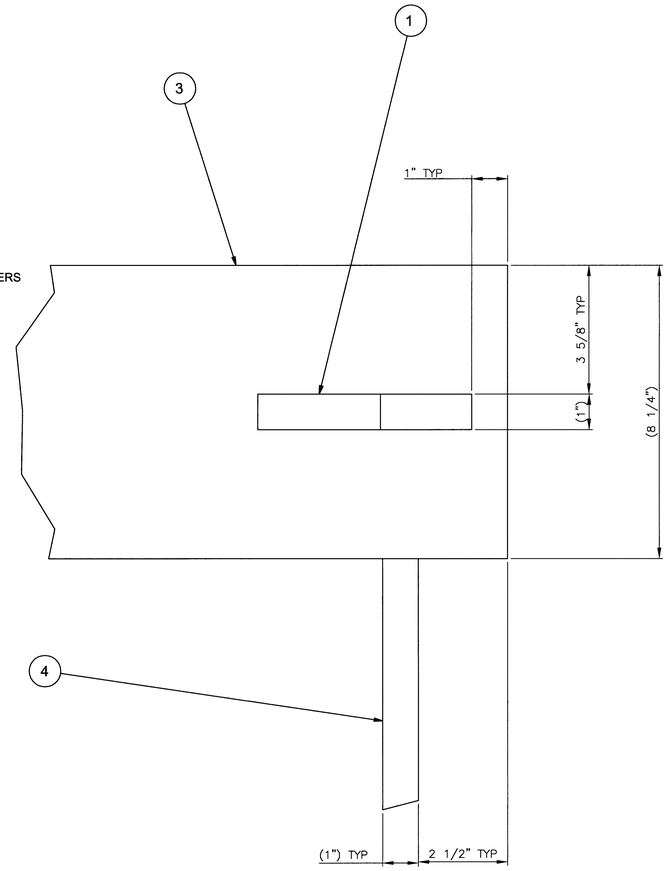

25 2 DETAIL
SCALE: 1/2

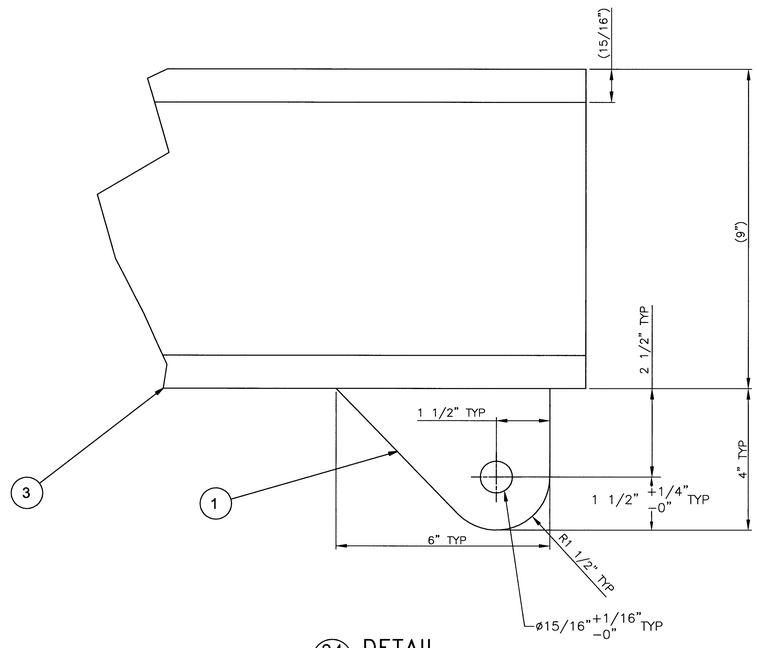

24 2 DETAIL
SCALE: 1/2

NOTE:
THIS DRAWING WAS PRODUCED FROM DURATEK DRAWING E-D-040 AND DOCUMENTS THE FABRICATION OF THE 60 FT TYPE A CONTAINER #WC74279. FOR THE FULL VENDOR FILE, SEE VI FILE #50534, 60' LONG LENGTH CONTAMINATED EQUIPMENT PACKAGE, AS PER RPP-29212, REV 0.

SEP 27 2011
DATE: STA: 4
HANFORD RELEASE
ID: 11

DWG NO	TITLE	REF NUMBER	TITLE
DRAWING TRACEABILITY LIST		REFERENCES	
		NEXT USED ON H-14-109326, SH 1	

REV REL	REV NO	DESCRIPTION	REV BY DATE	DRAFTING APRVD	ENGR COMPANY
5	RS 1	DIRECT REV PER ECN-11-001411	AW KRONER 07/11	RN KYLE	MA HAQ WRPS

REVISIONS

NAME	DATE	COMPANY
DRAWN BY AW Kroner	1/18/11	WRPS
Draft Check RN Kyle		WRPS
SEE REVISION 0		
ENGINEER J.H. Szymeczek		WRPS

U.S. DEPARTMENT OF ENERGY
Office of River Protection

60 FT TYPE A CONTAINER LID LIFTING BEAM

SIZE	BLDG NO	INDEX NO	DWG NO	REV
F	241G	1001	H-14-109326	1

SCALE SHOWN | EDT 824357 | SHEET 3 OF

31027 DOE_TB_F.DWG (01-01)

DWG NO H-14-109326 SH 3 OF REV 1