GENERAL NOTES: (UNLESS OTHERWISE SPECIFIED)

1. DIMENSIONING AND TOLERANCING PER ANSI Y14.5M-94. DIMENSIONS ARE IN INCHES. TOLERANCES: FRACTIONS: ±1/8; ANGLES; ±.5
2. BREAK ALL SHARP EDGES, REMOVE ALL BURRS. ROUND ALL EDGES THAT MAY CONTACT HOSE.
3. PREPARE AND PAINT ALL EXPOSED CARBON STEEL SURFACES WITH PPG PAINT PSX700 OR EQUIVALENT. FINISH COLOR SHALL BE GRAY. APPLY PAINT PER MANUFACTURER'S SPECIFICATIONS. POWDER COAT IS AN ACCEPTABLE COATING SYSTEM.
4. AFTER FINAL FABRICATION LABEL HOSE SUPPORT WITH APPROXIMATE WEIGHT USING 1" HIGH BLACK CHARACTERS. VINYL LETTERING OR PAINT APPROXIMATELY AS SHOWN.
5. CONCRETE FILL (ITEM 34) IS FOR RADIATION SHIELDING ONLY AND REQUIRES NO COMPRESSIVE STRENGTH. MIN DENSITY SHALL BE 150#/ CU FT. AGGREGATE (IF USED) SHALL BE FINE ENOUGH TO PRECLUDE INTERNAL VOIDS.
6. WELD AND INSPECT STRUCTURAL WELDS PER AWS D1.1 FOR STATICALLY LOADED STRUCTURES. VT WELDS ON FINAL PASS. WELDING PROCEDURES AND QUALIFICATIONS PER ASME SECTION IX ARE ACCEPTABLE. ALL WELDS SHALL BE EXAMINED BY AN AWS QC-1 CERTIFIED WELD INSPECTOR.
7. MAX OPERATING PRESSURE: 200 PSIG
   MAX OPERATING TEMPERATURE: 150 DEG F
8. INSTALL TUBING (ITEM NO. 28) IN FITTINGS PER MANUFACTURER'S INSTRUCTIONS.
9. APPLY RTV TO ALL PIPE THREADS DURING INSTALLATION. ALLOWABLE SUBSTITUTION FOR SEALANT NO. 103 RTV IS SEALANT NO. 102 RTV (GENERAL ELECTRIC).
10. SPRAY RING ASSEMBLY SHALL BE HYDROSTATICALLY TESTED IN ACCORDANCE WITH ASME B31.9 AT 300 (+10,-0) PSIG, FOR A MINIMUM OF 10 MINUTES. REMOVE SPRAY NOZZLES (ITEM 25) AND PLUG COUPLING (ITEM 33) PRIOR TO TESTING. AFTER HYDRO TEST, PERFORM OPERATIONAL TEST ON COMPLETE SPRAY RING ASSEMBLY.

11 SPRAY NOZZLE (ITEM NO. 25) TO BE INSTALLED TO SPRAY HORIZONTALLY.

12 MIX AND POUR CONCRETE PER MANUFACTURERS DIRECTIONS.

13 PAINT WITH 1" HIGH BLACK LETTERS IN APPROX LOCATION THE ACTUAL TOTAL WEIGHT OF FINAL ASSEMBLY IN LBS ROUNDED UP TO THE NEAREST WHOLE LB AND DRAWING NUMBER. ESTIMATED WEIGHT OF ASSEMBLY IS: XXXX LBS.

14 DO NOT WELD IN AREAS AROUND DOWEL HOLES OR CLEARANCE SLOTS.

15 VERIFY THAT THE INNER SHIELD RING, ITEM 4, IS CONCENTRIC WITH THE SPRAY RING ASSEMBLY, ITEM 2, SUCH THAT A ø11 3/4" DIAMETER CYLINDER CAN FREELY PASS THROUGH THE RISER ADAPTER ASSEMBLY.

16. FOR STRUCTURAL ANALYSIS SEE RPP-CALC-57917.

17 B31.9 PRESSURE BOUNDARY ATTACHMENT WELD.

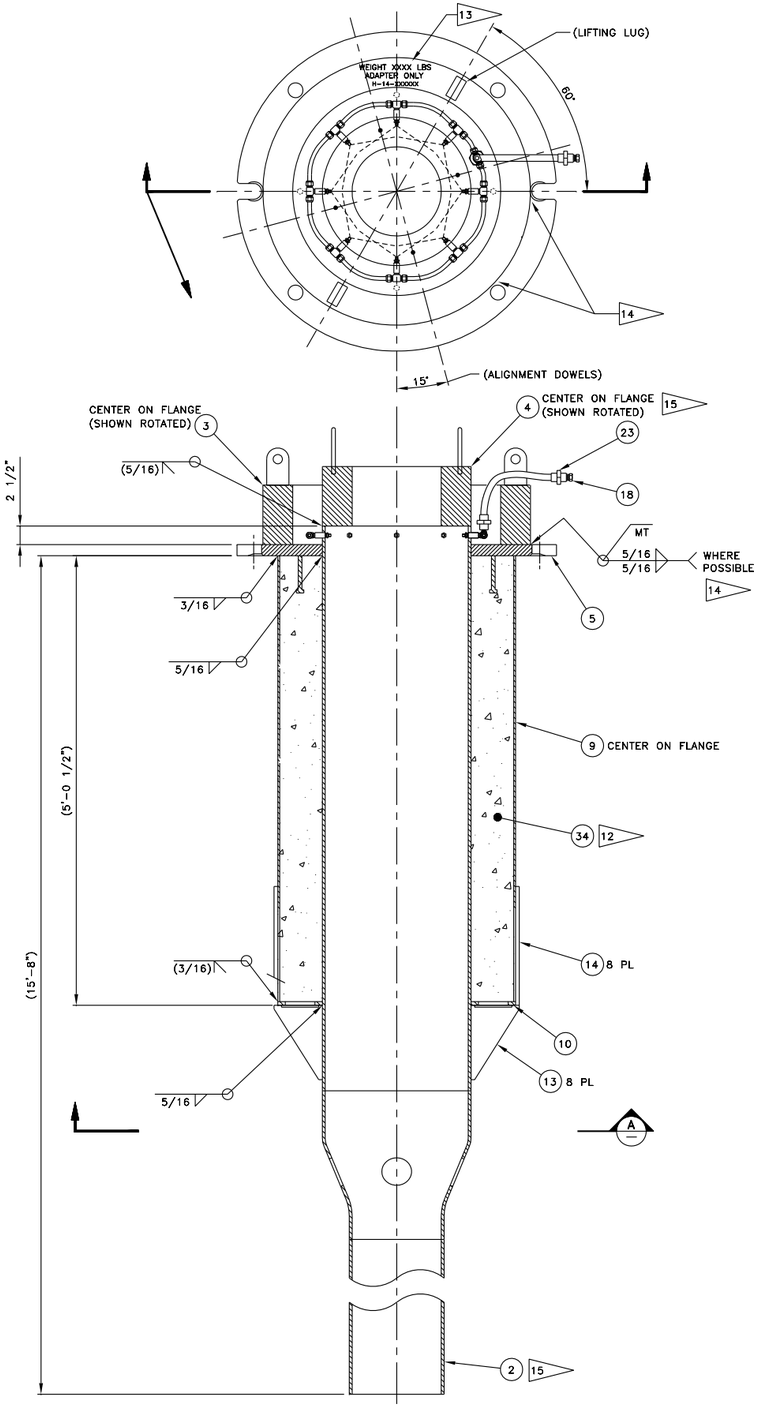

1 RISER ADAPTER ASSEMBLY
SCALE: 1 1/2"=1'-0"

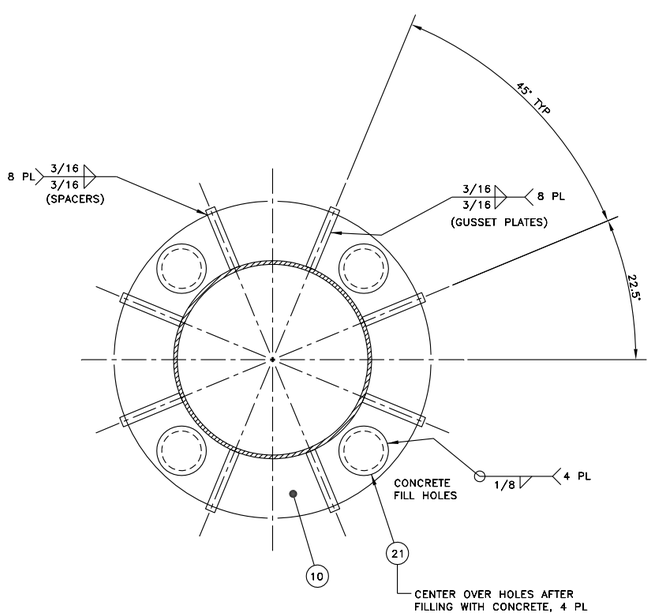

A SECTION
SCALE: NTS

PARTS LIST/MATERIAL LIST

QTY REQD -050	-040	-030	-020	-010	PARTS / DASH NUMBER	NOMENCLATURE/DESCRIPTION	MATERIAL/REFERENCE	SHEET	ITEM NO
				X	-010	RISER ADAPTER ASSEMBLY		1	1
			X	1	-020	SPRAY RING ASSEMBLY		2	2
		X		1	-030	OUTER SHIELD RING ASSEMBLY		2	3
	X			1	-040	INNER SHIELD RING ASSEMBLY		2	4
X				1	-050	TOP FLANGE		2	5
									6
									7
									8
				1	-001	CONCRETE SLEEVE 1/4" PLATE	ASTM A36	3	9
				1	-002	BOTTOM PLATE 1/2" PLATE	ASTM A36	3	10
	1				-003	INNER SHIELD RING, 8" PLATE 1'-0" ID X 1'-8" OD	ASTM A36	3	11
		2			-004	LIFTING LUG 1 1/2" PLATE	ASTM A36	3	12
				8	-005	GUSSET PLATE 1/2" PLATE	ASTM A36	3	13
				8	-006	SPACER, FLAT BAR 1/2" X 1" X 1'-4" LONG	ASTM A36	3	14
		1			-007	OUTER SHIELD RING, 8" PLATE 2'-4" ID X 3'-0" OD	ASTM A36	3	15
	4				-008	ALIGNMENT DOWEL ø1/2 ROUND BAR	ASTM A36	3	16
1					-009	TOP FLANGE PLATE 1 1/2" PLATE	ASTM A36	3	17
				1	4452K144	HEX HEAD PLUG, 1/2" NPT	MCMASTER		18
									19
				4		PLATE, 1/4" X ø5"	ASTM A36		21
			8		SS-810-3-4TTM	TEE, MALE, 1/2" TUBE X 1/4" NPT	SWAGELOK		22
				1	UFBX1	1/2" SST CORRUGATED METAL HOSE x 20' L W/ 1/2", 3000#, WELDED FEMALE UNION, SST END CONNECTIONS	US HOSE		23
			1		SS-810-3-8TTM	TEE, MALE, 1/2" TUBE X 1/2" NPT	SWAGELOK		24
			8		H1/4VV-SS11010	SPRAY NOZ, 1/4" MNPT, .079" ORIFICE	SPRAYING SYSTEMS		25
									26
									27
			AR			TUBING, 1/2 OD X .035 WALL	ASTM A269 304L OR 316L		28
			1			PIPE, 12", SCH STD 8'-0" L	ASTM A53 TYPE SEAMLESS		29
			1			PIPE, 20", SCH STD 6'-4" L	ASTM A53 TYPE (S OR E) GR B CS		30
4					101-053-008	WELD STUD, 1/2 x 6 1/8 H4L	NELSON (S OR E) GR B CS		31
			1			REDUCER, 20" X 12", BW, SCH STD	ASTM A234 GR WPB		32
			8			COUPLING, 1/4 NPT SS, 3000#	ASTM A182 OR B16.11		33
12			AR			CONCRETE	SEE NOTE 5		34
									35

DATE: Dec 31, 2014

DWG NUMBER	TITLE	REF NUMBER	TITLE
			REFERENCES
DRAWING TRACEABILITY LIST		NEXT USED ON	

REV NO.	DESCRIPTION
0	RELEASED PER EDT-850094

REVISIONS

ENLDG. NO. 241-AY-02B, 241-AY-02C, 241-AY-02D, 241-AY-02E, 241-AY-102
INDEX NO. 4750

CAUTION NOT COMPLETE WITHOUT CURRENT CHANGE DOCUMENTS FROM DATABASE

ATTENTION DESTROY THIS DOCUMENT BY SHREDDING MAY CONTAIN SENSITIVE INFORMATION

NAME	DATE	COMPANY
DRAFTER S A SNODGRASS	12/12/2014	ARES
SENIOR ENGINEER R W MOSSBRUCKER	12/12/2014	ARES
DESIGN AUTHORITY J R BUCHANAN	12/12/2014	WRPS

U.S. DEPARTMENT OF ENERGY
Office of River Protection

AY-102 RECOVERY SLUICE PIT RISER ADAPTER ASSEMBLY

SIZE F | DRAWING NUMBER H-14-110082 | SHEET 1 | REV 00
SCALE NOTED

11927 DOE_TB_F.DWG (JAN 2012)