NOTE:

1. FOR GENERAL NOTES AND PARTS LIST/MATERIAL LIST, SEE SHEET 1.

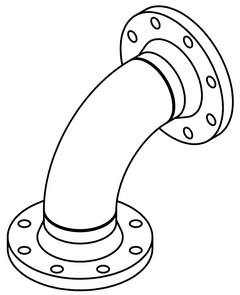

ISOMETRIC VIEW
NOT TO SCALE

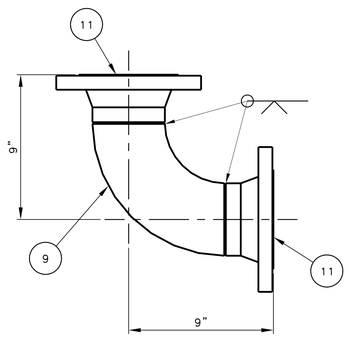

3 FLANGED ELBOW WELDMENT (SS)
SCALE: 3" = 1'-0"

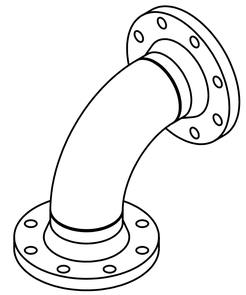

ISOMETRIC VIEW
NOT TO SCALE

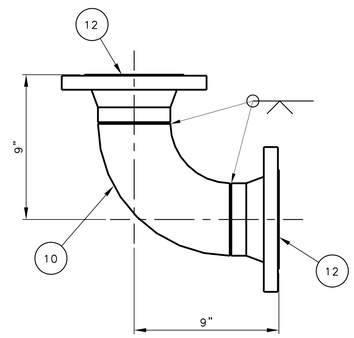

4 FLANGED ELBOW WELDMENT (GS)
SCALE: 3" = 1'-0"

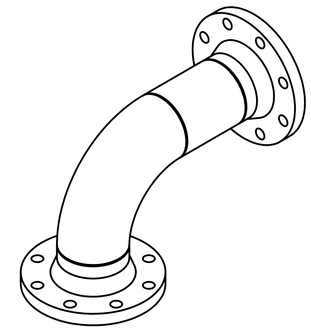

ISOMETRIC VIEW
NOT TO SCALE

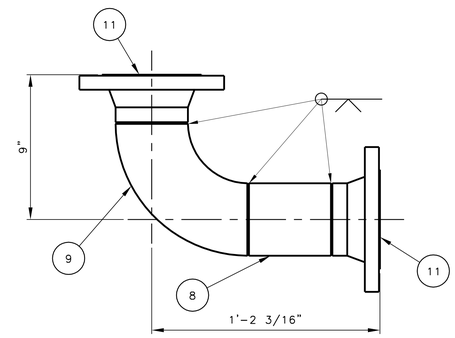

5 FLANGED ELBOW WELDMENT – LONG
SCALE: 3" = 1'-0"

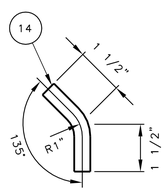

6 1/2" INSTRUMENT TUBING – BENT
SCALE: 6" = 1'-0"

DATE:
Sep 21, 2015
HANFORD RELEASE

DWG NUMBER	TITLE
DRAWING TRACEABILITY LIST	

REF NUMBER	TITLE
REFERENCES	
NEXT USED ON	

REV NO.	DESCRIPTION
0	INITIAL RELEASE PER EDT-850323
REVISIONS	

BLDG. NO. 241-SY

INDEX NO. 8900

CAUTION
NOT COMPLETE WITHOUT CURRENT CHANGE DOCUMENTS FROM DATABASE

ATTENTION
DESTROY THIS DOCUMENT BY SHREDDING MAY CONTAIN SENSITIVE INFORMATION

	NAME	DATE	COMPANY
DRAFTER	B A LILLY	09/10/2015	KURI
DRAFTING CHECKER	Z J FITZGERALD	09/10/2015	KURI
DESIGN ENGINEER	A J TYLER	09/10/2015	KURI
DESIGN AUTHORITY	R E FLYE	09/15/2015	WRPS

U.S. DEPARTMENT OF ENERGY
Office of River Protection

DST FLOW MONITORING
SY FARM
PIPING FABRICATION

SIZE F | DRAWING NUMBER H-14-110388 | SHEET 2 | REV 00
SCALE SHOWN

22370 DOE_TB_F.DWG (JAN 2015)