NOTE:

1. FOR GENERAL NOTES AND PARTS LIST/MATERIAL LIST, SEE SHEET 1.

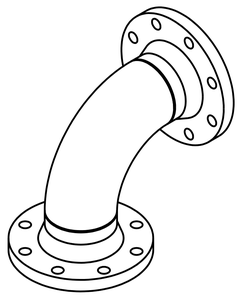

ISOMETRIC VIEW
NOT TO SCALE

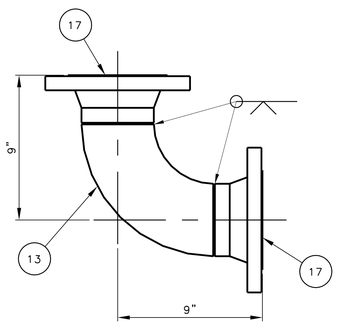

3 FLANGED ELBOW WELDMENT – LR (SS)
SCALE: 3" = 1'-0"

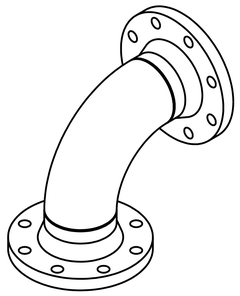

ISOMETRIC VIEW
NOT TO SCALE

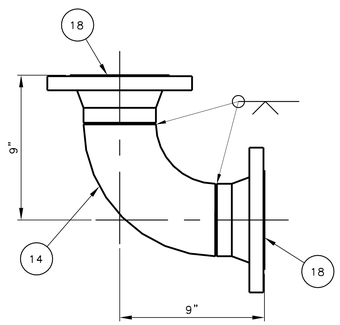

4 FLANGED ELBOW WELDMENT – LR (GS)
SCALE: 3" = 1'-0"

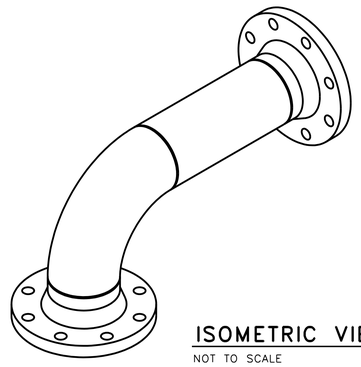

ISOMETRIC VIEW
NOT TO SCALE

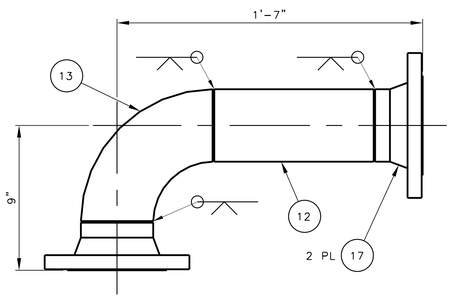

5 FLANGED ELBOW WELDMENT – LR LONG
SCALE: 3" = 1'-0"

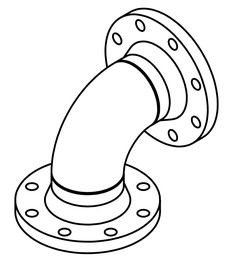

ISOMETRIC VIEW
NOT TO SCALE

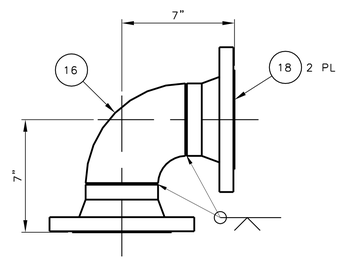

6 FLANGED ELBOW WELDMENT – SR
SCALE: 3" = 1'-0"

DATE: Sep 26, 2015 HANFORD RELEASE

DWG NUMBER	TITLE	REF NUMBER	TITLE
DRAWING TRACEABILITY LIST		NEXT USED ON	REFERENCES

REV REL	MFD	REV NO.	DESCRIPTION
		0	INITIAL RELEASE PER EDT-850415

REVISIONS

BLDG. NO. 241-AN

INDEX NO. 8900

CAUTION NOT COMPLETE WITHOUT CURRENT CHANGE DOCUMENTS FROM DATABASE

ATTENTION DESTROY THIS DOCUMENT BY SHREDDING MAY CONTAIN SENSITIVE INFORMATION

	NAME	DATE	COMPANY
DRAFTER	B A LILLY	09/21/2015	KURI
DRAFTING CHECKER	Z J FITZGERALD	09/21/2015	WRPS
DESIGN ENGINEER	A J TYLER	09/21/2015	WRPS
DESIGN AUTHORITY	R E FLYE	09/21/2015	WRPS

U.S. DEPARTMENT OF ENERGY
Office of River Protection

DST FLOW MONITORING AN FARM PIPING FABRICATION

SIZE F | DRAWING NUMBER H-14-110393 | SHEET 2 | REV 00

SCALE SHOWN

25959 DOE_TB_F.DWG (JAN 2015)