GENERAL NOTES:

1. REFERENCE P&ID DRAWING H-14-020103.
2. BEFORE FABRICATION, CONTRACTOR SHALL FIELD VERIFY ALL DIMENSIONS, OBSTRUCTIONS, AND EXISTING INSTALLED EQUIPMENT. SOME EXISTING FEATURES ARE NOT SHOWN FOR CLARITY.
3. DIMENSIONS AND TOLERANCES SHALL BE PER ASME Y14.5M-1994. ALL DIMENSIONS ARE IN INCHES, UNLESS NOTED OTHERWISE. TOLERANCES ARE AS FOLLOWS:
   DECIMAL: .X=±0.1, .XX=±0.02, .XXX=±0.005
   FRACTIONAL: ± 1/8"
   ANGULAR: ±2 DEGREES
   MACHINED RADII: ±0.02 MAXIMUM
4. DUCTWORK PIPING FABRICATION, INSTALLATION, VISUAL INSPECTION, AND TESTING SHALL BE IN ACCORDANCE WITH ASME B31.3, NORMAL FLUID SERVICE, EXCEPT AS NOTED OTHERWISE.
5. STRUCTURAL MATERIALS, PIPE, AND PIPE FITTINGS SHALL BE PROVIDED WITH A CERTIFICATE OF CONFORMANCE TO THE REFERENCED STANDARD OR A CERTIFIED MATERIAL TEST REPORT.
6. ALL DIMENSIONS TO PIPE FLANGES ARE TAKEN AT THE RAISED FACE OF THE FLANGE.
7. ALL FLANGE ORIENTATIONS ARE TO BE "TWO HOLED" INDUSTRY STANDARD.
8. 2 FLANGES, 2 GASKETS, 2 PIPE PLUGS, 8 STUDS AND 16 NUTS ARE SUPPLIED IN THE FLANGE UNION KIT (ITEM 12) PURCHASED TO FABRICATE THE BYPASS LINE WELDMENTS (ITEMS 1 AND 2), USE 1 FLANGE FOR EACH WELDMENT. SAVE THE OTHER ITEMS TO INSTALL THE ORIFICE PLATE (ITEM 11, DRAWING H-14-001397) SHOWN ON THE INSTALLATION ASSEMBLIES.
9. DRILL AND TAP A THIRD HOLE IN THE FACTORY SUPPLIED FLANGE UNION PARTS, 90° FROM THE TWO EXISTING TAPPED HOLES, AS SHOWN.
10. ITEM IS SAFETY SIGNIFICANT.
11. ALL ITEMS ARE GENERAL SERVICE (GS), UNLESS NOTED OTHERWISE.

PARTS LIST/MATERIAL LIST

	QTY REQD -050	-040	-030	-020	-010	PARTS/DASH NUMBER	NOMENCLATURE/DESCRIPTION	MATERIAL/REFERENCE	SHEET	ITEM NO
10.					X	-010	BYPASS LINE WELDMENT - UPSTREAM		1	1
10.				X		-020	BYPASS LINE WELDMENT - DOWNSTREAM		1	2
10.			X			-030	FLANGED ELBOW WELDMENT (SS)		2	3
		X				-040	FLANGED ELBOW WELDMENT (GS)		2	4
10.	X					-050	1/2" INSTRUMENT TUBING - BENT		2	5
										6
10.				AR	AR		DUCT, 4" SCH. 10S PIPE, SEAMLESS	ASTM A312 TP304/304L		7
10.			1				ELBOW, 4", 90°, LR, SCH. 10S	ASTM A403 WP-S TYPE 304/304L		8
		1					ELBOW, 4", 90°, LR, SCH. 10S	ASTM A403 WP-S TYPE 304/304L		9
10.			2	1	1		FLANGE, 4", WN, RF, CL 150	ASTM A182 GR F304/304L		10
		2					FLANGE, 4", WN, RF, CL 150	ASTM A182 GR F304/304L		11
8. 10.				*	1	1496WN040A3SFCSSQC1Q8	ORIFICE FLANGE UNION KIT, 4", WN, RF, CL 300	ROSEMOUNT		12
10.	AR						TUBE, 1/2" O.D., 0.065 WALL, SEAMLESS	ASTM A269		13

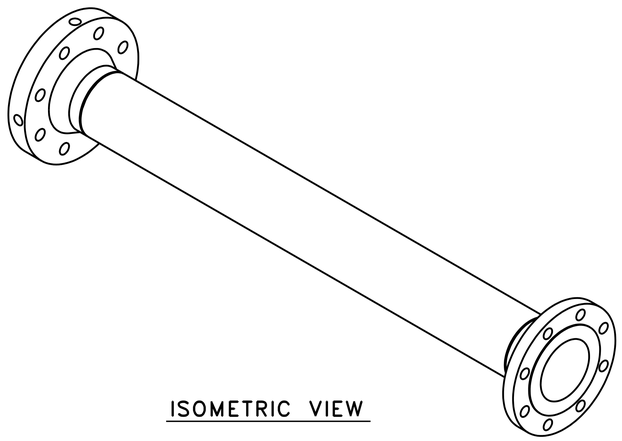

ISOMETRIC VIEW

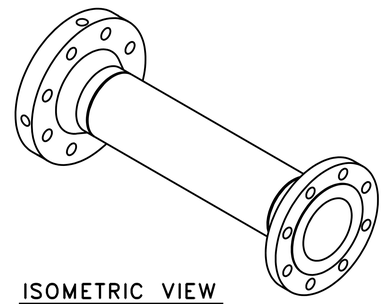

ISOMETRIC VIEW

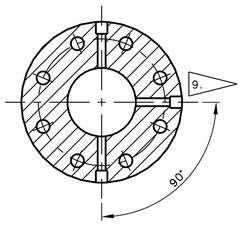

A SECTION
SCALE: 3" = 1'-0"

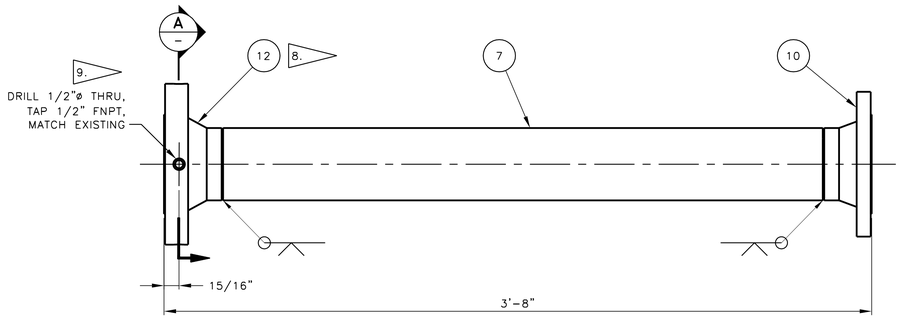

1 BYPASS LINE WELDMENT - UPSTREAM
SCALE: 3" = 1'-0"

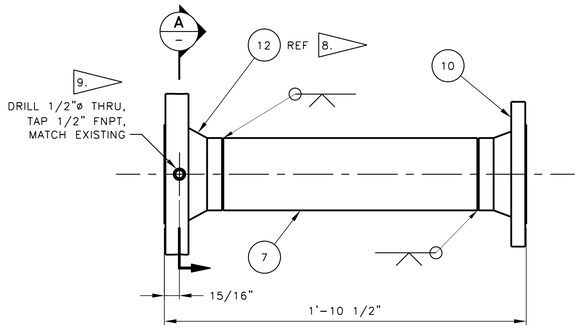

2 BYPASS LINE WELDMENT - DOWNSTREAM
SCALE: 3" = 1'-0"

DATE: Sep 26, 2015 HANFORD RELEASE

DWG NUMBER	TITLE	REF NUMBER	TITLE
DRAWING TRACEABILITY LIST		REFERENCES	
		NEXT USED ON	

REV REL	REV NO.	DESCRIPTION
	0	INITIAL RELEASE PER EDT-850416
REVISIONS		

BLDG. NO. 241-AP

INDEX NO. 8900

CAUTION NOT COMPLETE WITHOUT CURRENT CHANGE DOCUMENTS FROM DATABASE

ATTENTION DESTROY THIS DOCUMENT BY SHREDDING MAY CONTAIN SENSITIVE INFORMATION

	NAME	DATE	COMPANY
DRAFTER	B A LILLY	09/21/2015	KURI
DRAFTING CHECKER	Z J FITZGERALD	09/21/2015	WRPS
DESIGN ENGINEER	A J TYLER	09/21/2015	WRPS
DESIGN AUTHORITY	R E FLYE	09/21/2015	WRPS

U.S. DEPARTMENT OF ENERGY
Office of River Protection

DST FLOW MONITORING
AP FARM
PIPING FABRICATION

SIZE F | DRAWING NUMBER H-14-110398 | SHEET 1 | REV 00

SCALE SHOWN

26394 DOE_TB_F.DWG (JAN 2015)