NOTE:

1. FOR GENERAL NOTES AND PARTS LIST/MATERIAL LIST, SEE SHEET 1.

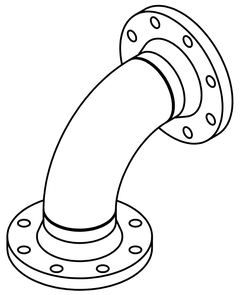

ISOMETRIC VIEW

NOT TO SCALE

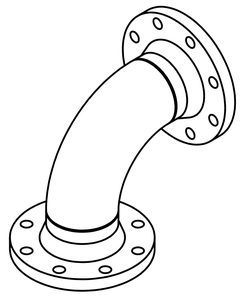

ISOMETRIC VIEW

NOT TO SCALE

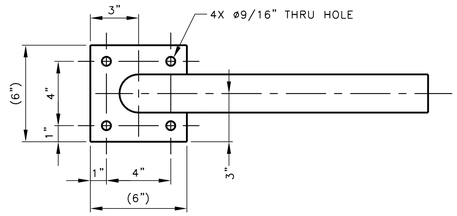

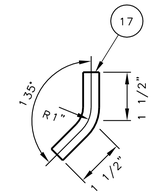

1/2" INSTRUMENT TUBING – SHORT

6 SCALE: 6" = 1'-0"

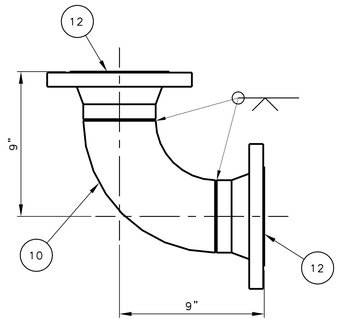

FLANGED ELBOW WELDMENT (SS)

3 SCALE: 3" = 1'-0"

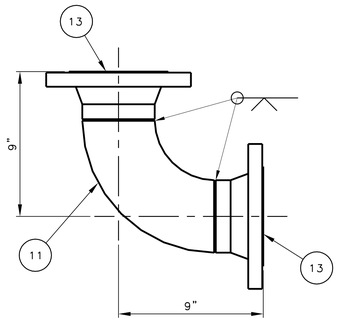

FLANGED ELBOW WELDMENT (GS)

4 SCALE: 3" = 1'-0"

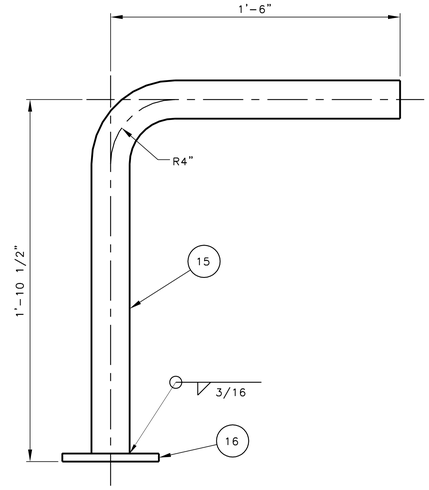

5 INSTRUMENT STAND WELDMENT

SCALE: 3" = 1'-0"

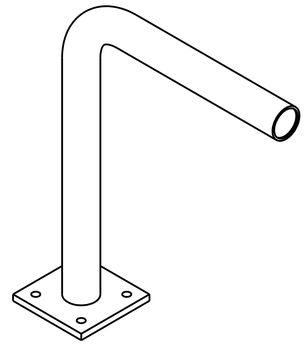

ISOMETRIC VIEW

NOT TO SCALE

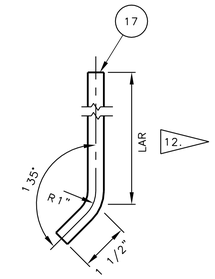

1/2" INSTRUMENT TUBING – LONG

7 SCALE: 6" = 1'-0"

DATE: Sep 25, 2015

HANFORD RELEASE

DWG NUMBER	TITLE	REF NUMBER	TITLE
DRAWING TRACEABILITY LIST		REFERENCES	
		NEXT USED ON	

REV. REL.	REV NO.	DESCRIPTION
MFG	0	INITIAL RELEASE PER EDT-850417
REVISIONS		

BLDG. NO. 241-AW

INDEX NO. 8900

CAUTION NOT COMPLETE WITHOUT CURRENT CHANGE DOCUMENTS FROM DATABASE

ATTENTION DESTROY THIS DOCUMENT BY SHREDDING MAY CONTAIN SENSITIVE INFORMATION

	NAME	DATE	COMPANY
DRAFTER	B A LILLY	09/21/2015	KURI
DRAFTING CHECKER	Z J FITZGERALD	09/21/2015	WRPS
DESIGN ENGINEER	A J TYLER	09/21/2015	WRPS
DESIGN AUTHORITY	R E FLYE	09/21/2015	WRPS

U.S. DEPARTMENT OF ENERGY
Office of River Protection

DST FLOW MONITORING
AW FARM
PIPING FABRICATION

SIZE F | DRAWING NUMBER H-14-110403 | SHEET 2 | REV 00

SCALE SHOWN

26417

DOE_TB_F.DWG (JAN 2015)