GENERAL NOTES:

1. REFERENCE P&ID DRAWING H-14-020106.
2. BEFORE FABRICATION, CONTRACTOR SHALL FIELD VERIFY ALL DIMENSIONS, OBSTRUCTIONS, AND EXISTING INSTALLED EQUIPMENT. SOME EXISTING FEATURES ARE NOT SHOWN FOR CLARITY.
3. DIMENSIONS AND TOLERANCES SHALL BE PER ASME Y14.5M-1994. ALL DIMENSIONS ARE IN INCHES. TOLERANCES ARE AS FOLLOWS:
   DECIMAL: .X=±0.1, .XX=±0.02, .XXX=±0.005
   FRACTIONAL: ± 1/8"
   ANGULAR: ±2 DEGREES
   MACHINED RADII: ±0.02 MAXIMUM
4. DUCTWORK PIPING FABRICATION, INSTALLATION, VISUAL INSPECTION, AND TESTING SHALL BE IN ACCORDANCE WITH ASME B31.3, NORMAL FLUID SERVICE, EXCEPT AS NOTED OTHERWISE.
5. ALL FLANGE ORIENTATIONS ARE TO BE "TWO HOLED" INDUSTRY STANDARD.
6. STRUCTURAL MATERIALS, PIPE, AND PIPE FITTINGS SHALL BE PROVIDED WITH A CERTIFICATE OF CONFORMANCE TO THE REFERENCED STANDARD OR A CERTIFIED MATERIAL TEST REPORT.
7. ALL DIMENSIONS TO PIPE FLANGES ARE TAKEN AT THE RAISED FACE OF THE FLANGE.
8. 2 FLANGES, 2 GASKETS, 2 PIPE PLUGS, 8 STUDS AND 16 NUTS ARE SUPPLIED IN THE FLANGE UNION KIT (ITEM 15) PURCHASED TO FABRICATE THE BYPASS LINE WELDMENTS (ITEMS 1 AND 2), USE 1 FLANGE FOR EACH WELDMENT. SAVE THE OTHER ITEMS TO INSTALL THE ORIFICE PLATE (ITEM 12, DRAWING H-14-001407) SHOWN ON THE INSTALLATION ASSEMBLIES.
9. DRILL AND TAP A THIRD HOLE IN THE FACTORY SUPPLIED FLANGE UNION PARTS, 90° FROM THE TWO EXISTING TAPPED HOLES, AS SHOWN.
10. ITEM IS SAFETY SIGNIFICANT (SS).
11. ALL ITEMS ARE GENERAL SERVICE (GS), UNLESS NOTED OTHERWISE.
12. ALL PIPE SUPPORTS SHALL BE INSTALLED ACCORDING TO MANUFACTURER'S SPECIFICATIONS.
13. ALL STRUCTURAL STEEL WELDING SHALL BE IN ACCORDANCE WITH AWS D1.1. WELDING ELECTRODES SHALL BE E70XX. STRUCTURAL STEEL WELDING PROCEDURES AND WELDER QUALIFICATIONS SHALL BE IN ACCORDANCE WITH AWS D1.1. ALL STEEL WELDED CONNECTIONS SHALL BE VT INSPECTED BY A CERTIFIED WELDING INSPECTOR PER STATICALLY LOADED STRUCTURE.
14. CARBON STEEL PIPE SUPPORT (ITEM 6) SHALL PREPARED AND PAINTED IN ACCORDANCE WITH 241-AY/AZ CONSTRUCTION SPECIFICATION W-030-C2, DIVISION 9, SECTION 09900, OR APPROVED EQUIVALENT.

PARTS LIST/MATERIAL LIST

	QTY REQD -060	-050	-040	-030	-020	-010	PARTS/DASH NUMBER	NOMENCLATURE/DESCRIPTION	MATERIAL/REFERENCE	SHEET	ITEM NO
10.						X	-010	BYPASS LINE WELDMENT - UPSTREAM		1	1
10.					X		-020	BYPASS LINE WELDMENT - DOWNSTREAM		1	2
				X			-030	BYPASS LINE WELDMENT - HORIZONTAL CONNECTION		2	3
			X				-040	BYPASS LINE WELDMENT - VERTICAL CONNECTION		2	4
10.		X					-050	1/2" INSTRUMENT TUBING - BENT		3	5
	X						-060	PIPE SUPPORT		3	6
											7
10.					AR	AR		DUCT, 4" SCH. 40S PIPE, SEAMLESS	ASTM A312 TP304/304L		8
			AR	AR				DUCT, 4" SCH. 40S PIPE, SEAMLESS	ASTM A312 TP304/304L		9
10.					1			ELBOW, 4", 90°, LR, SCH. 40S	ASTM A403 WP-S TYPE 304/304L		10
			1	1				ELBOW, 4", 90°, LR, SCH. 40S	ASTM A403 WP-S TYPE 304/304L		11
			1					ELBOW, 4", 45°, SCH. 40S	ASTM A403 WP-S TYPE 304/304L		12
10.					1	1		FLANGE, 4", WN, RF, CL 150	ASTM A182 GR F304/304L		13
			2	2				FLANGE, 4", WN, RF, CL 150	ASTM A182 GR F304/304L		14
8. 10.					*	1	1496WN040A3SFGSSQC1Q8	ORIFICE FLANGE UNION KIT, 4", WN, RF, CL 300	ROSEMOUNT		15
10.		AR						TUBE, 1/2" O.D., 0.065 WALL, SEAMLESS	ASTM A269		16
	1						(FIGURE 259)	PIPE SADDLE SUPPORT, 4", W/ U-BOLT	(ANVIL) A36 FABRICATED CS		17
	1						(FIGURE 63, TYPE P)	PIPE STANCHION SUPPORT, 4" PIPE, 3" STANCHION	(ANVIL) - A36 CS (BASE PLATE) A513 GR 1020 CS (STANCHION)		18

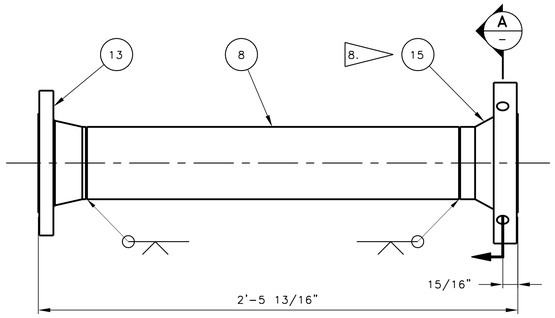

1 BYPASS LINE WELDMENT - UPSTREAM
SCALE: 3" = 1'-0"

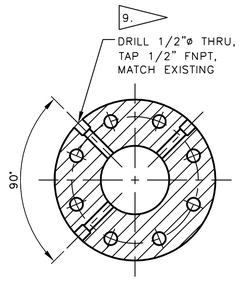

A SECTION
SCALE: 3" = 1'-0"

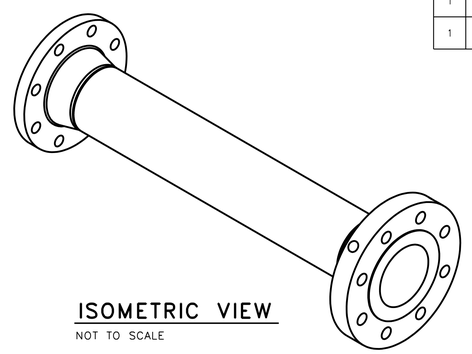

ISOMETRIC VIEW
NOT TO SCALE

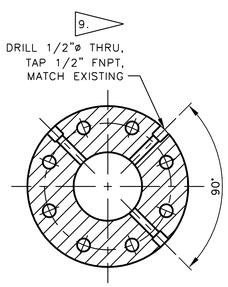

B SECTION
SCALE: 3" = 1'-0"

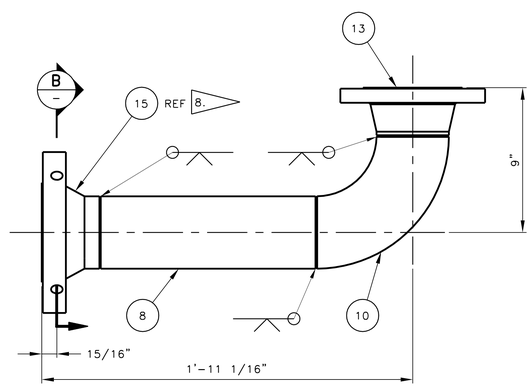

2 BYPASS LINE WELDMENT - DOWNSTREAM
SCALE: 3" = 1'-0"

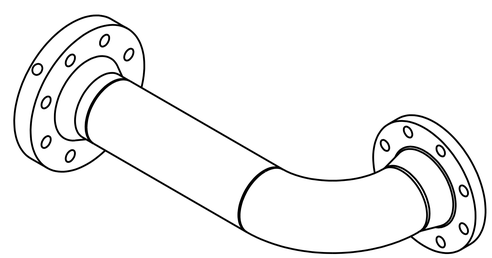

ISOMETRIC VIEW
NOT TO SCALE

DWG NUMBER	TITLE
DRAWING TRACEABILITY LIST	

REF NUMBER	TITLE
REFERENCES	
NEXT USED ON	

REV NO.	DESCRIPTION
0	INITIAL RELEASE PER EDT-850384
REVISIONS	

BLDG. NO. 241-AY

INDEX NO. 8900

CAUTION
NOT COMPLETE WITHOUT CURRENT CHANGE DOCUMENTS FROM DATABASE

ATTENTION
DESTROY THIS DOCUMENT BY SHREDDING MAY CONTAIN SENSITIVE INFORMATION

	NAME	DATE	COMPANY
DRAFTER	B A LILLY	09/21/2015	KURI
DRAFTING CHECKER	Z J FITZGERALD	09/21/2015	WRPS
DESIGN ENGINEER	L C GALLERT	09/21/2015	WRPS
DESIGN AUTHORITY	R E FLYE	09/21/2015	WRPS

U.S. DEPARTMENT OF ENERGY
Office of River Protection

DST FLOW MONITORING
AY FARM
PIPING FABRICATION

SIZE F | DRAWING NUMBER H-14-110408 | SHEET 1 | REV 00
SCALE SHOWN

DATE: Sep 25, 2015
HANFORD RELEASE

25251 DOE_TB_F.DWG (JAN 2015)