NOTE:

1. FOR GENERAL NOTES AND PARTS LIST/MATERIAL LIST, SEE SHEET 1.

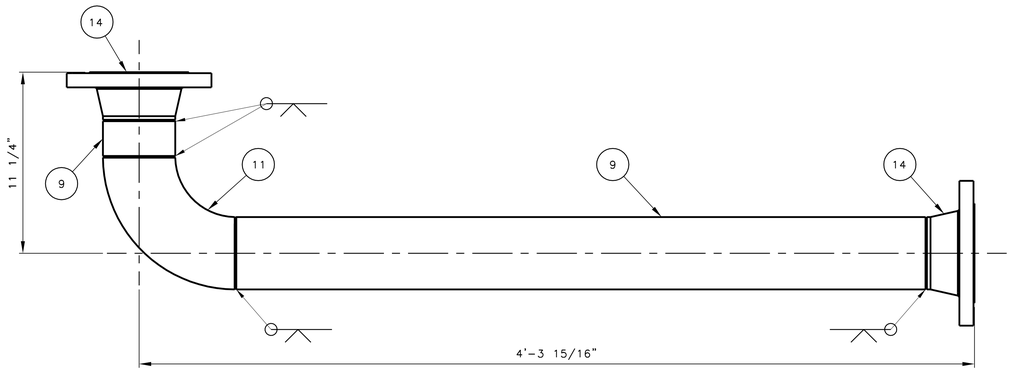

3 BYPASS LINE WELDMENT – HORIZONTAL CONNECTION
SCALE: 3" = 1'-0"

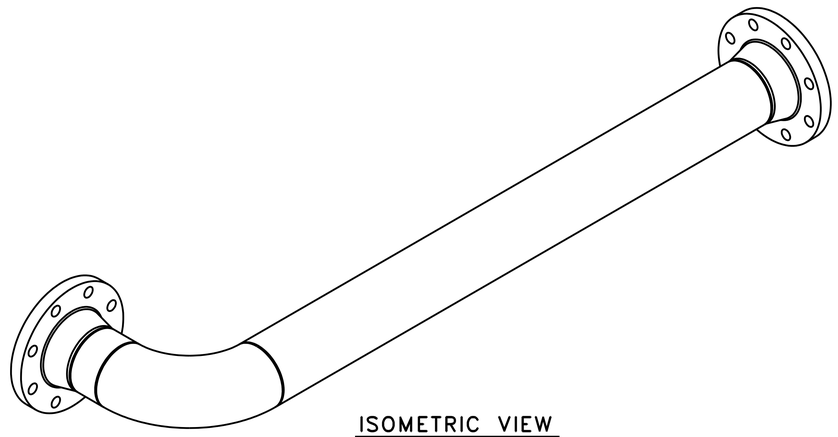

ISOMETRIC VIEW
NOT TO SCALE

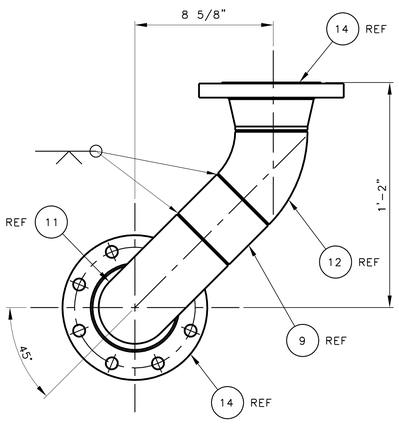

END VIEW

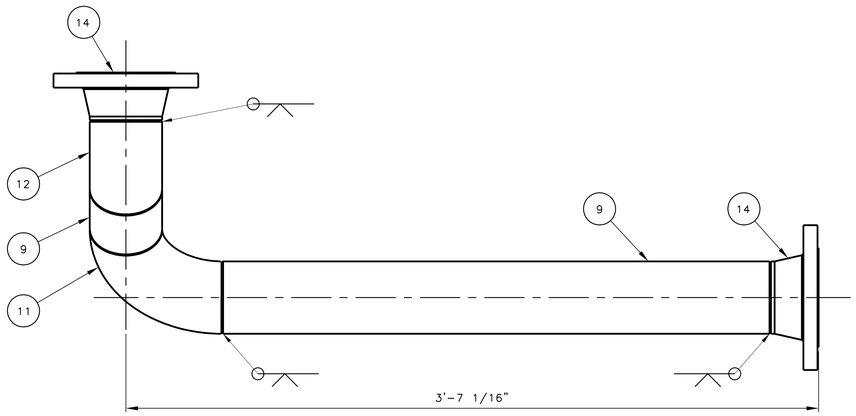

4 BYPASS LINE WELDMENT – VERTICAL CONNECTION
SCALE: 3" = 1'-0"

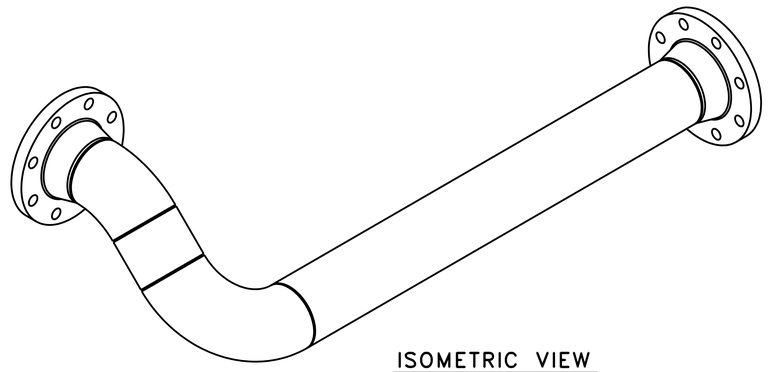

ISOMETRIC VIEW
NOT TO SCALE

DATE:
Sep 26, 2015
HANFORD RELEASE

DWG NUMBER	TITLE	REF NUMBER	TITLE
DRAWING TRACEABILITY LIST		NEXT USED ON	REFERENCES

REV REL	MFD	REV NO.	DESCRIPTION
		0	INITIAL RELEASE PER EDT-850385

REVISIONS

BLDG. NO. 241-AZ

INDEX NO. 8900

CAUTION
NOT COMPLETE WITHOUT CURRENT CHANGE DOCUMENTS FROM DATABASE

ATTENTION
DESTROY THIS DOCUMENT BY SHREDDING MAY CONTAIN SENSITIVE INFORMATION

	NAME	DATE	COMPANY
DRAFTER	B A LILLY	9/21/2015	KURI
DRAFTING CHECKER	Z J FITZGERALD	9/21/2015	WRPS
DESIGN ENGINEER	L C GALLERT	9/21/2015	WRPS
DESIGN AUTHORITY	R E FLYE	9/21/2015	WRPS

U.S. DEPARTMENT OF ENERGY
Office of River Protection

DST FLOW MONITORING
AZ FARM
PIPING FABRICATION

SIZE F | DRAWING NUMBER H-14-110535 | SHEET 2 | REV 00

SCALE SHOWN

25442

DOE_TB_F.DWG (JAN 2015)