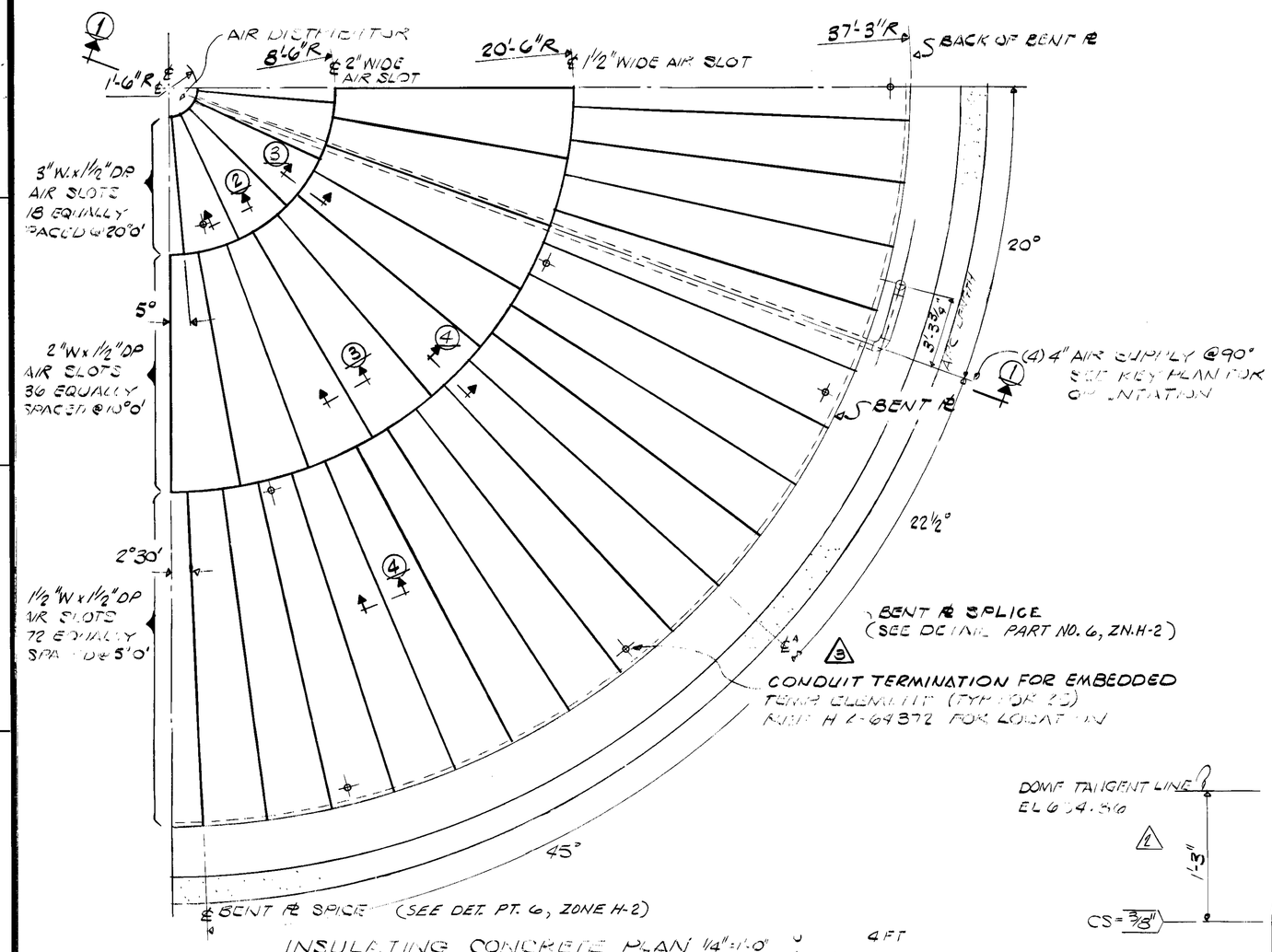

INSULATING CONCRETE PLAN 1/4"=1'-0"

AIR SLOTS ORIENTED WITH RECEIVED TO 4" AIR SUPPLY LINES REF KEY PLAN

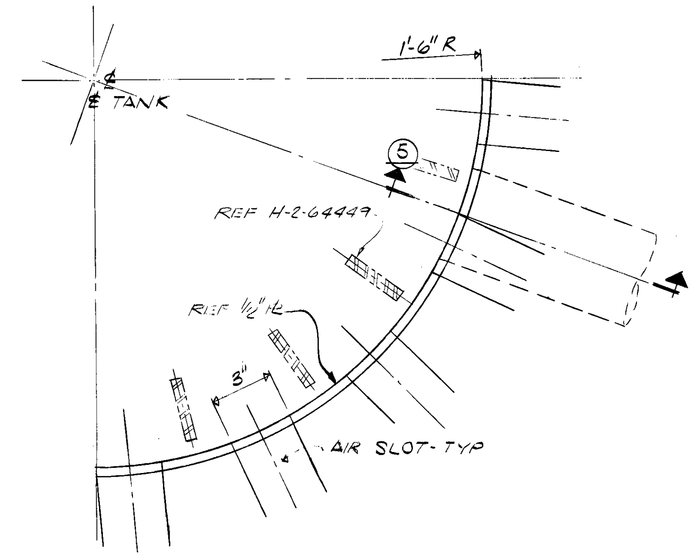

AIR DISTRIBUTOR PLAN
3"=1'-0"

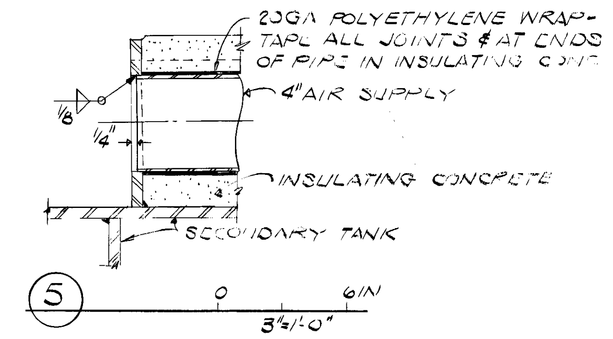

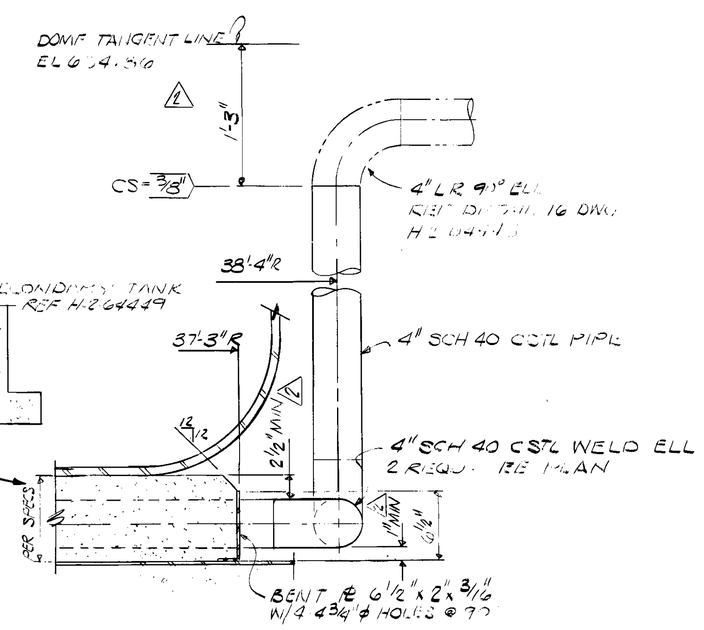

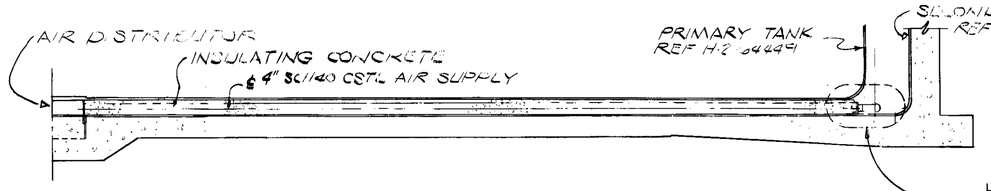

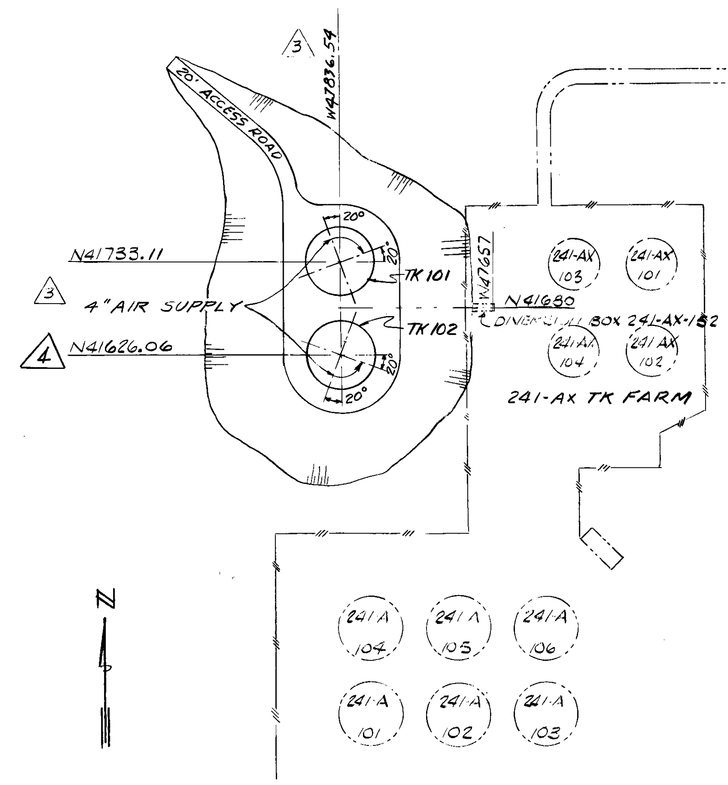

KEY PLAN
NO SCALE

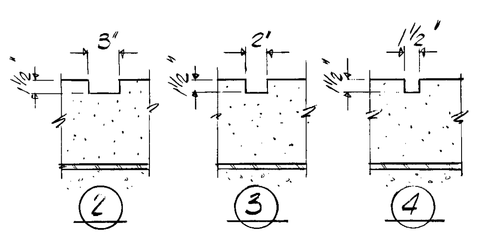

AIR SLOT DETAILS

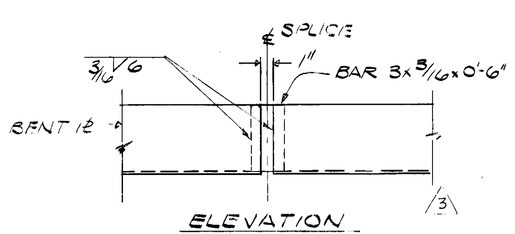

ELEVATION

BENT PL SPLICE

6

NO SCALE

NOTES:

1. INSULATING CONCRETE SLAB SHALL BE LEVEL WITHIN PLUS OR MINUS 1/4 INCH
2. CS OBTAINED ON SITE. CONSTRUCTION IS CALCULATED FOR 60°F INSTALLATION. LEAKAGE, ADJUST COLD SPRING FOR INSTALL AMBIENT TEMPERATURE MORE OR LESS THAN 20°F FROM CALCULATED INSTALLATION TEMPERATURE.

REFERENCE DRAWINGS	
DWG. NO.	DRAWING TITLE OR INDEX NO.
HWS-7789	SPECIFICATIONS
H-2-64272	[illegible]
H-2-64449	TK LIFT [illegible]

USED WITH DWG.

REV.	BY	DATE	DRAWING STATUS		APPROVAL AUTHORITY	MICRO-FILMED
4	[illegible]	6-8-70	N41726.50 (Z-8-E) FCN 21305 CORRECTED COORDINATE - WAS [illegible] TACK WELD. ZN.H2. CHK'D FOR AS-BUILT. ADD: PT. 6 TO ELEV. VIEW. & REMOVED CORD. WA7836.54 WAS: WA7836.0, ZN.D-10 & N41726.06 WAS: N41726.50, ZN.E-9 REV. COORD., N41733.11 WAS: N41733.50		[illegible]	
3	JMJ	10/15/68	DELETED 1" PIPE SLEEVE, ZONE D-4		[illegible]	
2	[illegible]	[illegible]	CORR DIMENS E-6, EXTENDED AIR SUPPLY D-6 KEY PLAN REVISED E-11		[illegible]	
1	[illegible]	[illegible]	KEY PLAN REVISED E-11		[illegible]	
[illegible]	[illegible]	[illegible]	[illegible] COMMENTS INCORPORATED		[illegible]	
	[illegible]	12/9/67	COMMENT PRINT	ISSUE NO. 1		
	[illegible]	12/6/67	CHECK PRINT	ISSUE NO. 1		

U. S. ATOMIC ENERGY COMMISSION
RICHLAND OPERATION OFFICE

HANFORD ENGINEERING SERVICES
A DIVISION OF VITRO CORP. OF AMERICA

SCALE SHOWN

		DATE
DRAWN BY	E. AING	12/6/67
CHECKED BY	D.G.L.	12/6/67
RESPONSIBLE ENGR.	D. LIEN	12/6/67
APPROVED	[illegible]	12/6/67
APPROVED	[illegible]	12/6/67
CLASSIFIED BY	[illegible]	12-6-67

CLASSIFICATION: NONE

STRUCTURAL
INSULATING CONCRETE
PLAN & DETAILS

PROJ. NO. JAP-618
OR W.O. NO. A3-2617
PROJ. TITLE 241-AX TK FARM
BLDG. NO. 241-AY
INDEX NO. [illegible]
DWG. NO. H-2-64307
SHEET NO. -
SHEETS -

H-2-64307 SHEET -/- REV. 4

ARHCO
RICHLAND, WASHINGTON
APPROVED FOR CONFORMANCE WITH DESIGN CRITERIA
BY [illegible] 12/6/68

DWG. REV NO.	APPD BY	DATE	DWG. REV NO.	APPD BY	DATE
1	[illegible]	[illegible]			
2	[illegible]	[illegible]			
3	[illegible]	[illegible]			