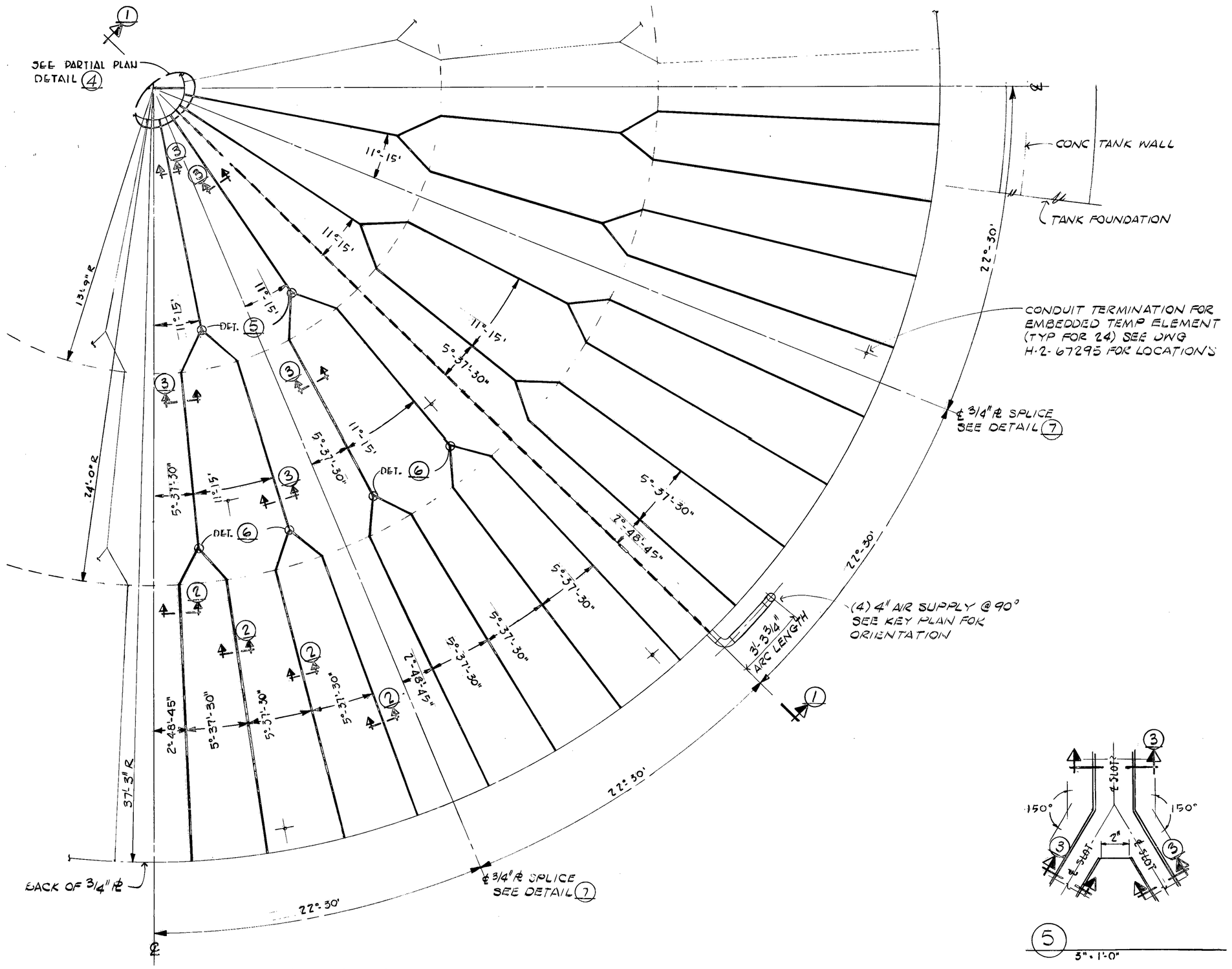

INSULATING CONCRETE PLAN ~ TYPICAL QUADRANT

SCALE 3/16" = 1'-0"

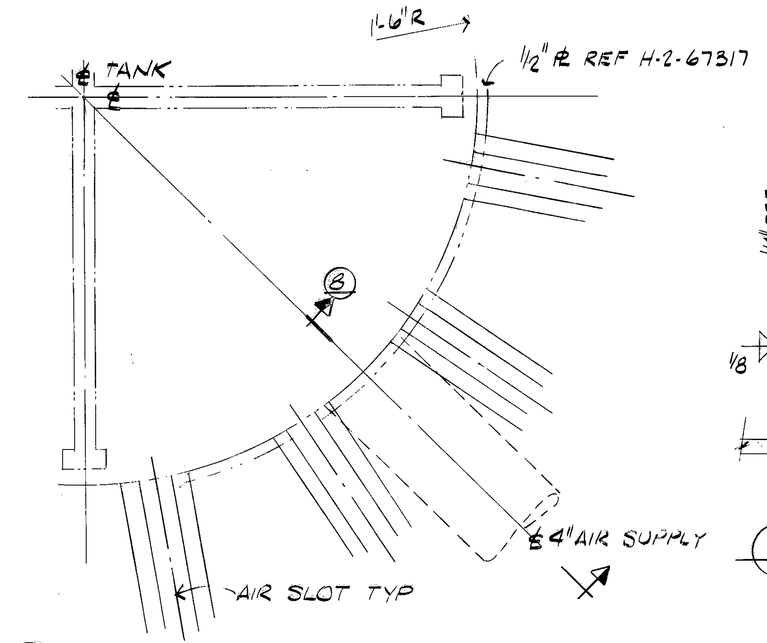

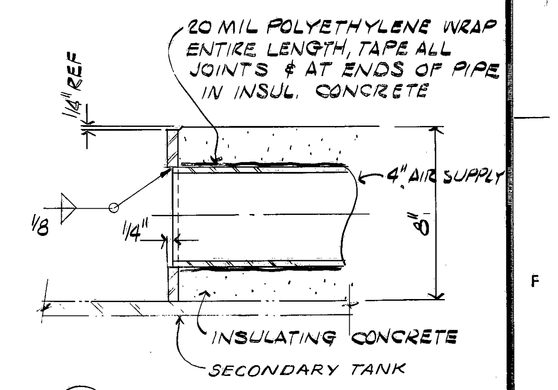

8 1/4 SCALE

4 AIR DISTRIBUTOR CHAMBER PLAN

1/4 SCALE

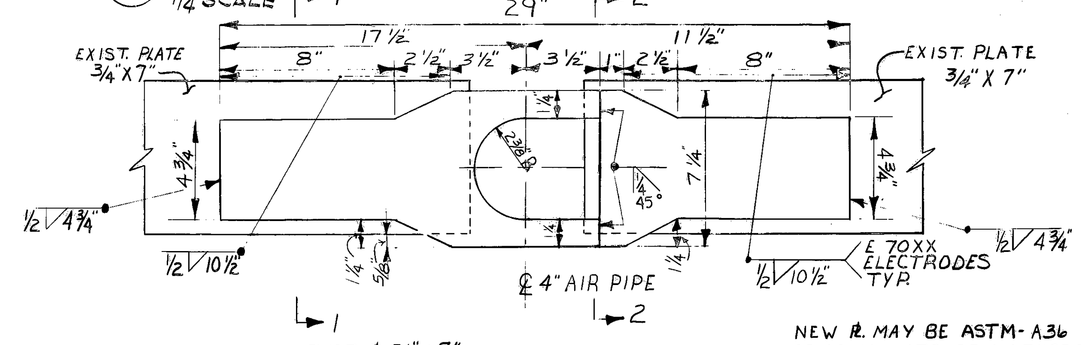

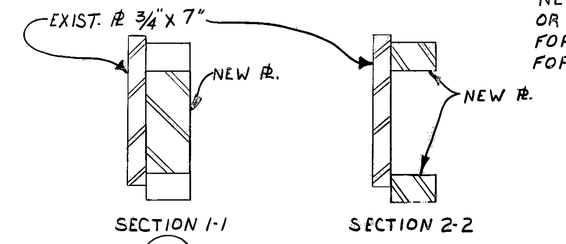

9 REINFORCING ⌀.

TYP @ AIR PIPE (4 PLACES)

NEW ⌀. MAY BE ASTM-A36 OR ASTM-A572 GR. 55 TYPE 2. FOR A36 USE ⌀ 2" X 7 1/4" FOR A572 USE ⌀. 1 1/2" X 7 1/4"

5 3" = 1'-0"

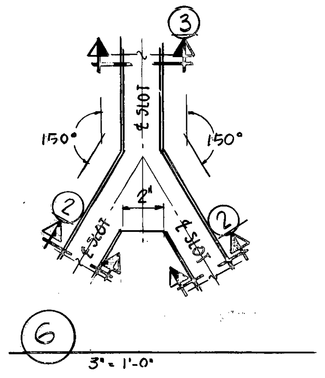

6 3" = 1'-0"

NOTES

1. INSULATING CONCRETE SLAB SHALL BE LEVEL WITHIN PLUS OR MINUS 1/4 INCH
2. C.S. DENOTES COLD SPRING. DIMENSION IS CALCULATED FOR 60°F INSTALLATION TEMPERATURE. ADJUST COLD SPRING FOR INSTALLATION TEMPERATURE MORE OR LESS THAN 20°F FROM CALCULATED INSTALLATION TEMPERATURE.
3. SLOTS, DETAILS 2 & 3 MAY BE RECTANGULAR OF SAME CROSS-SECTIONAL AREA, AT CONTRACTORS OPTION, MAINTAINING SAME DEPTH.

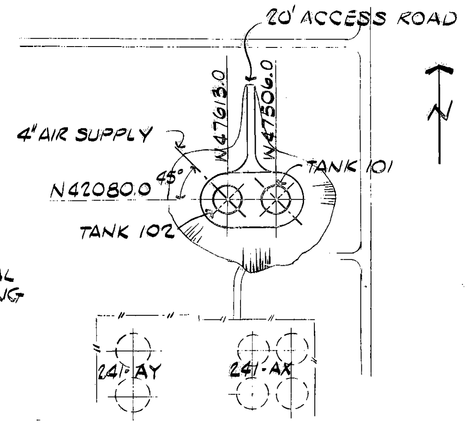

KEY PLAN

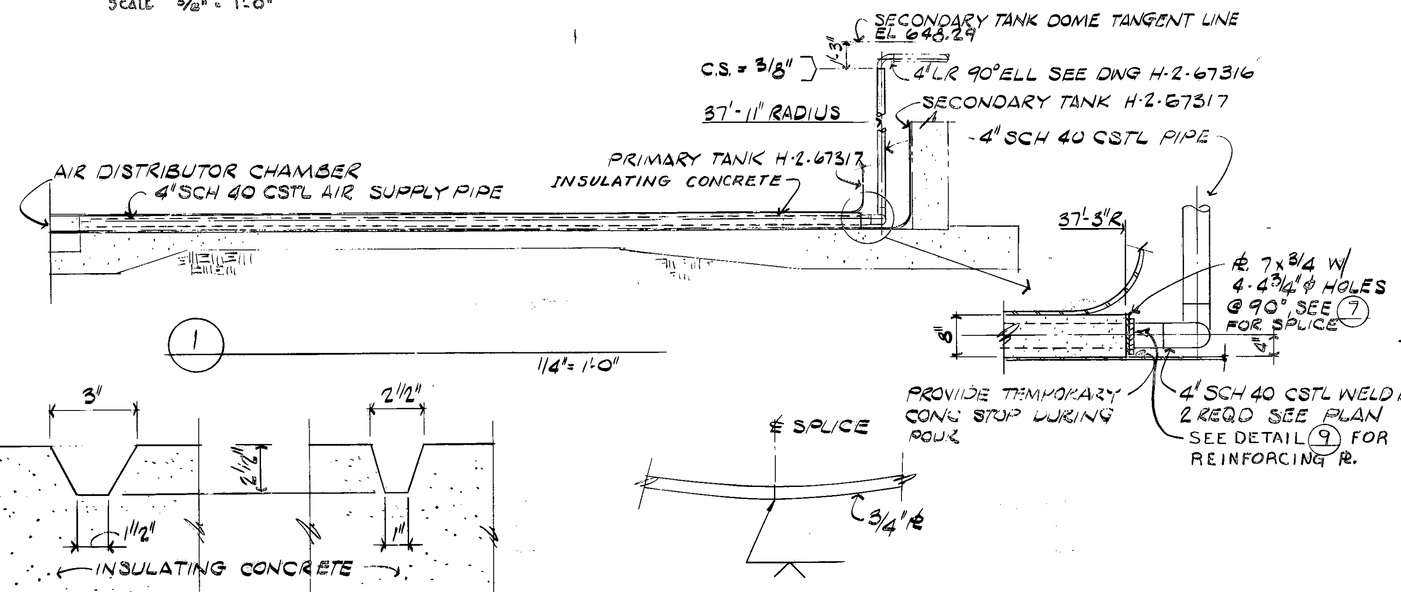

1 1/4" = 1'-0"

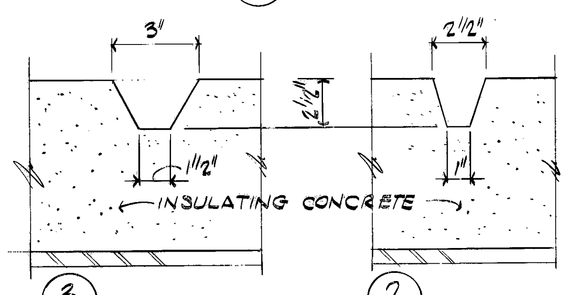

3 2

7 8 SPLICES @ 45° SEE PLAN FOR ORIENTATION

REFERENCE DRAWINGS		
H-2-67295	INSTRUMENTATION	
H-2-67317	TK. ELEV & DETAILS	
HNS-8802	SPECIFICATIONS	
DWG. NO.	REV NO.	DRAWING TITLE OR INDEX NO.

NEXT USED ON

DRAWING STATUS					
MICRO FILMED	BY-DATE	DOC	DY-DATE	FOR	REV DY
	APVD FOR CONFORMANCE WITH DESIGN CRIT		APPD		DY DATED
COMMENT PRY ISSUE NO. 1			CHECK PRY ISSUE NO.		DATE

REVISIONS		
REV NO.	DESCRIPTION	
1	CHECKED FOR AS-BUILT (1) ADDED DETAIL 9 IN C-4.	
LAST REV	1	

APPROVED FOR RL - H & S M. F. Miller DATE 9-21-70

APPRO. FOR CONFORMANCE WITH DESIGN CRITERIA	DATE
BY D. S. Stephens	9/18/70
FOR Richland	
APPD	9/18/70
APPD	9/18/70
APPD D. Lien	9/18/70
DPTG APPD	
CHECKED	9/18/70
DRAWN HDS	7/23/70
SCALE SHOWN	
CLASSIFICATION NONE	

U. S. ATOMIC ENERGY COMMISSION
RICHLAND OPERATIONS OFFICE

HANFORD ENGINEERING SERVICES
DIVISION OF VITRO CORP. OF AMERICA

STRUCTURAL
INSULATING CONCRETE
PLAN & DETAILS

PROJ. NO. HAP-647 W.O.80.
PROJ. TITLE TANK FARM EXPANSION, 241-AZ TANK FARM
BLDG. NO. 241-AZ
INDEX NO. 0402.02
DWG NO. H2-67244
SHEET NO. - SHEETS -