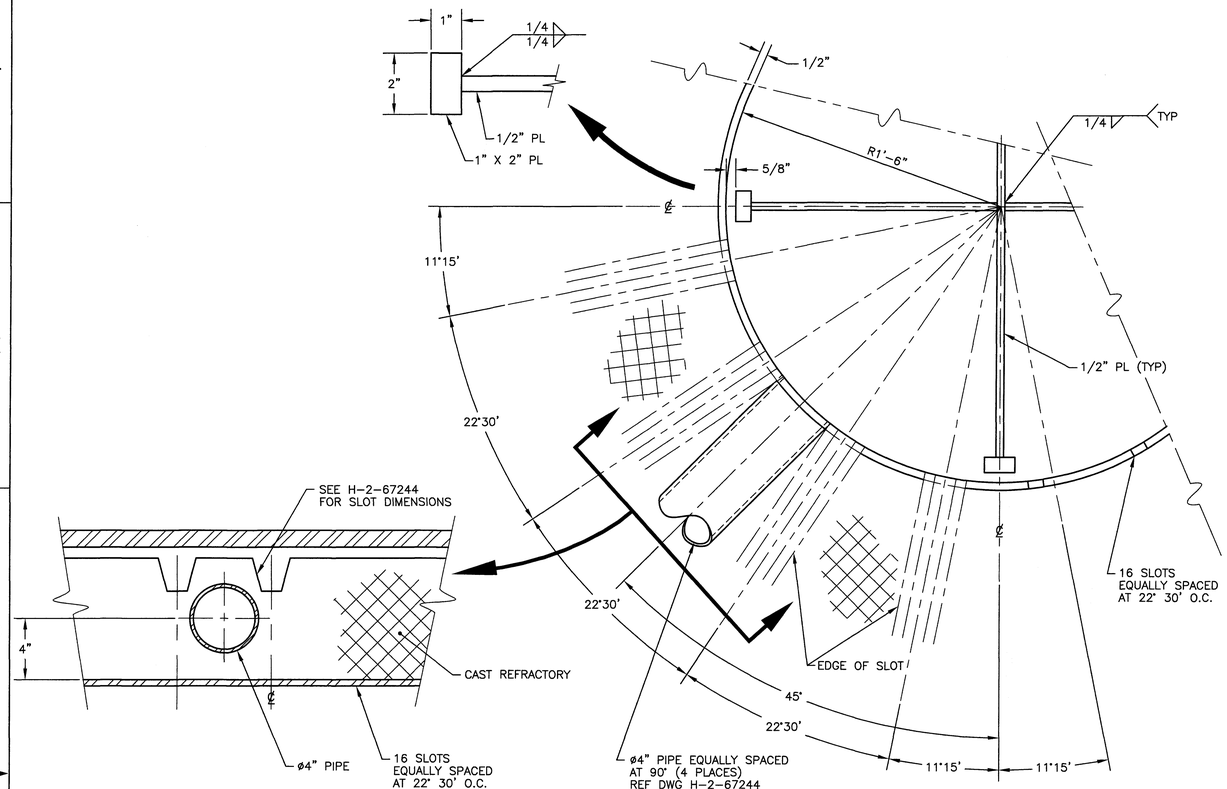

SECTION "A"
SCALE: 3" = 1'-0"

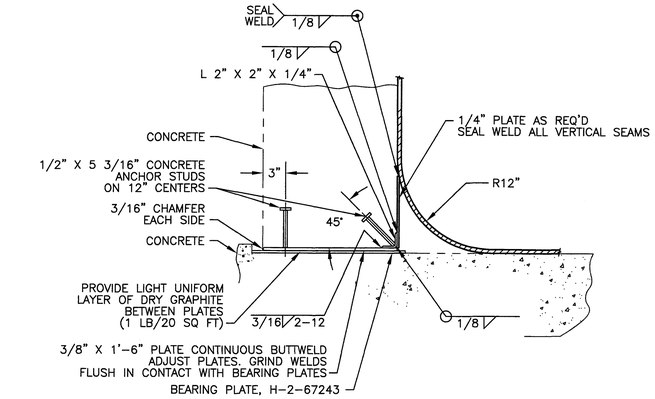

DETAIL 1
SCALE: 1 1/2" = 1'-0"

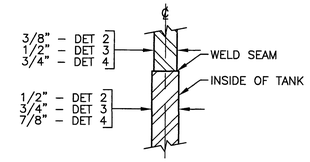

DETAIL 2
DETAIL 3
DETAIL 4
SCALE: NONE

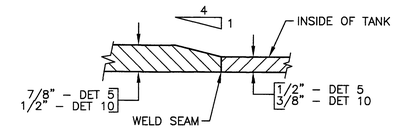

DETAIL 5
DETAIL 10
SCALE: NONE

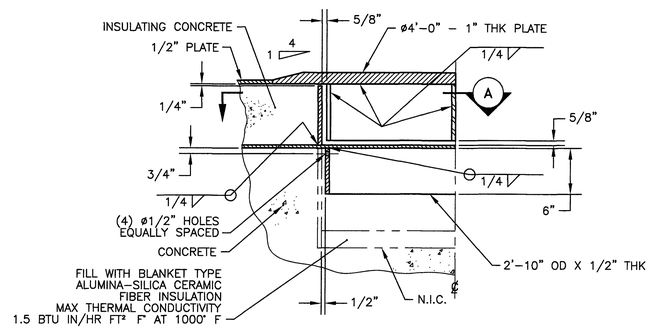

DETAIL 6
SCALE: 1 1/2" = 1'-0"

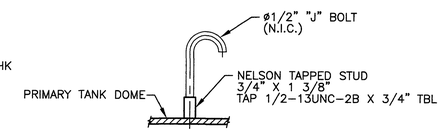

DETAIL 7
SCALE: 3" = 1'-0"

SEE NOTE 4 FOR LOCATION
DWG H-2-67314 & H-2-67315

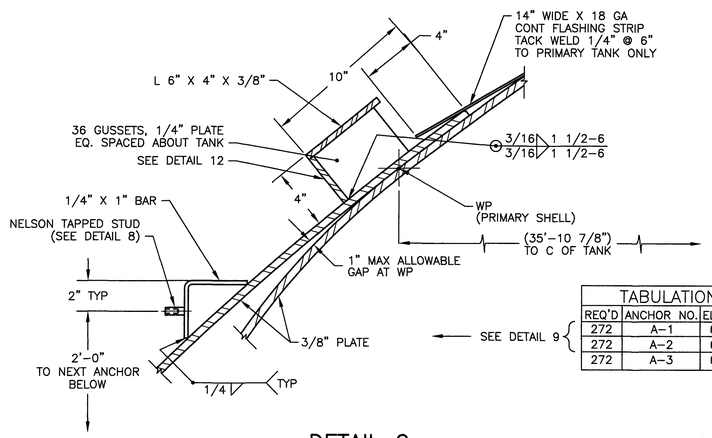

TABULATION		
REQ'D	ANCHOR NO.	ELEVATION
272	A-1	652.96'
272	A-2	650.96'
272	A-3	648.96'

SEE DETAIL 9

DETAIL 9
SCALE: 3" = 1'-0"

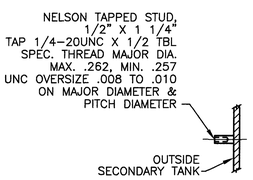

DETAIL 8
SCALE: 3" = 1'-0"

FOR LOCATION
DWG H-2-67314 & H-2-67315

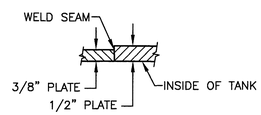

DETAIL 11
SCALE: NONE

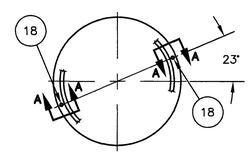

PLAN
DETAIL 12
SCALE: NONE

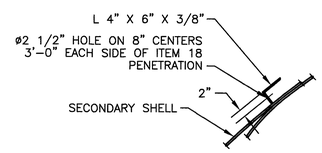

SECTION A-A
SCALE: NONE
REFERENCE DETAIL 9

SEE SHEET 1 FOR GENERAL NOTES

APR 30 2008
DATE:
STA
HANFORD RELEASE
ID:

DWG NO	TITLE
DRAWING TRACEABILITY LIST	

REF NUMBER	TITLE
REFERENCES	
NEXT USED ON	

REV NO	DESCRIPTION	REV BY DATE	ENGR COMPANY
REVISIONS			

NAME	DATE	COMPANY
DRAWN BY B. TURNER	1/08	CCES
ENGINEER Gary B. Tunkel	04/24/08	CHG
Gary Tunkel	4/24/08	CHG

U.S. DEPARTMENT OF ENERGY
Office of River Protection

TANKS 101 & 102
SECTION & DETAILS
241-AZ TANK FARM

SIZE	BLDG NO	INDEX NO	DWG NO	REV
F	241AZ	0402	H-2-67317	0

SCALE SHOWN EDIT ECN 725359 R0 SHEET 2 OF

5866

DOE_TB_F.DWG (01-01)

DWG NO H-2-67317 SH 2 OF REV 0