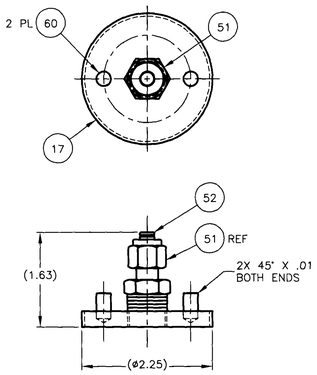

5 RETAINER ASSY
SCALE: 1/1

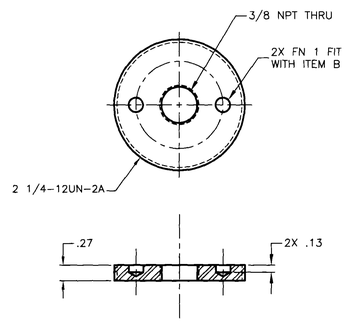

17 RETAINER
SCALE: 1/1

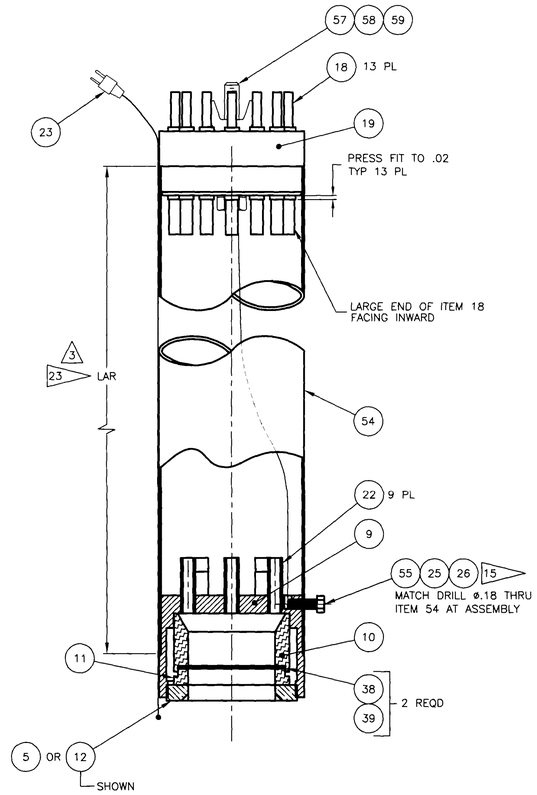

4 SAMPLE HEAD ASSEMBLY
SCALE: 1/1

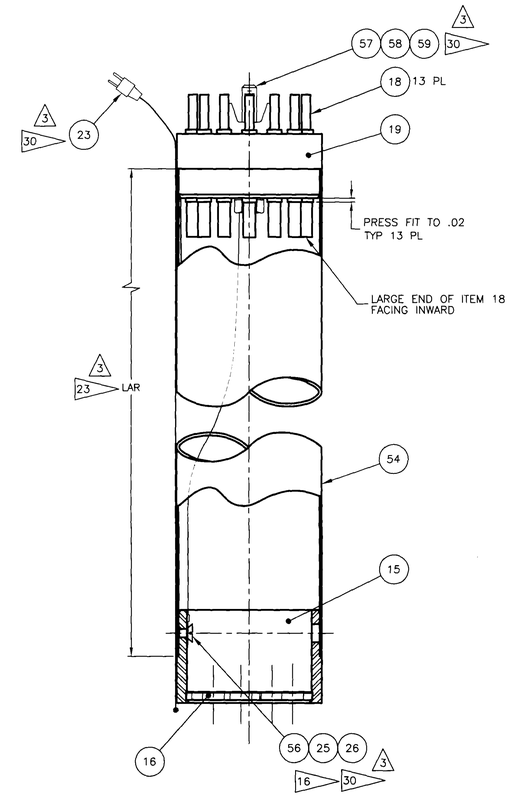

2 MODEL 2 UN-FILTERED SAMPLE HEAD ASSEMBLY
SCALE: 1/1

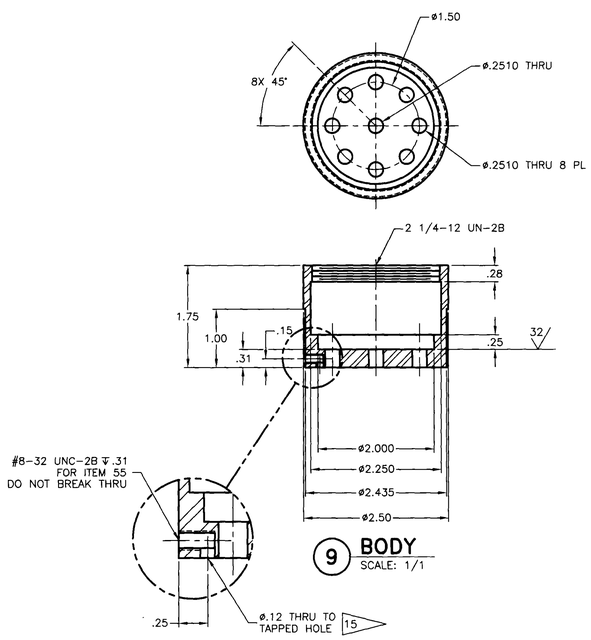

9 BODY
SCALE: 1/1

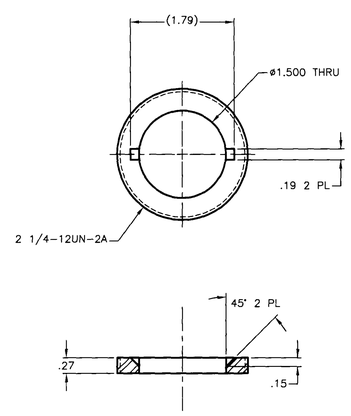

12 RETAINER
SCALE: 1/1

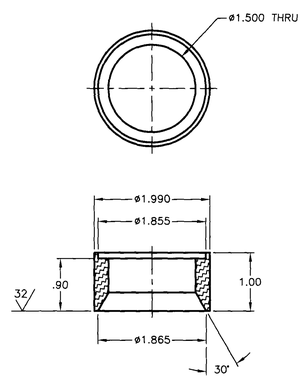

10 FRIT HOLDER
SCALE: 1/1

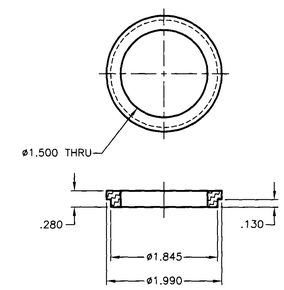

11 THRUST WASHER
SCALE: 1/1

FOR GENERAL NOTES AND PARTS LIST SEE SHEET 1.

THIS SPACE RESERVED FOR BUILDING AND INDEX NUMBERS

BLDG. NO.

INDEX NO.

DWG NO	SH	OF	REV
H-2-825301	2		3

DWG NO	TITLE	REF NUMBER	TITLE
DRAWING TRACEABILITY LIST		REFERENCES	
		NEXT USED ON	AS ALLOCATED

REV REL	MFD	REV NO	DESCRIPTION	REV BY DATE	ENGR	COMPANY
		3	REVISED PER ECN 656719 & 657983	DMH 8/02		
REVISIONS						

	NAME	DATE	COMPANY
DRAWN BY	DW WELCH	4/95	
CONTRACT SPEC	P ROMERO BY LJR	4/95	
APPL ENGR	R SKORGE	4/95	
DOE ENGR	DAVID DEFORD	4/95	
DESIGN AUTHORITY	JE PURCELL BY CC MAIL	5/95	

U.S. DEPARTMENT OF ENERGY
Office of River Protection

IN SITU SAMPLE HEAD ASSEMBLY & DETAILS

SIZE	BLDG NO	INDEX NO	DWG NO	REV
F	241G	4600	H-2-825301	3

SCALE SHOWN | EDT 603277 | SHEET 2 OF

3773

DOE_TB_F.DWG (01-01)