## GENERAL NOTES (UNLESS OTHERWISE NOTED)

1. DIMENSIONING AND TOLERANCING PER ANSI Y14.5M-82
   DIMENSIONS ARE IN INCHES.
   TOLERANCES: DECIMAL: .XX = ±.05
   .XXX = ±.005
   .XXXX = ±.0005
   ANGULAR: ±1°
2. ALL LIMITS AND FITS PER ANSI B4.1
3. BREAK ALL SHARP EDGES AND REMOVE ALL BURRS.
4. ITEMS 9 THRU 12, 22, 38 AND 39 SHALL BE CLEANED PER THE SOLVENT RINSING STEPS OF SAMPLING AND MOBILE LABS PROCEDURE LO-080-405 PRIOR TO USE IN SAMPLING.
5. TEFLON PARTS (ITEMS 10 & 11) SHALL HAVE NO OIL USED ON THEM DURING FABRICATION.
6. MACHINED FILLET RADII SHALL BE .03 MAXIMUM UNLESS OTHERWISE INDICATED.
7. ALL MACHINED SURFACES SHALL BE 125√ OR BETTER UNLESS OTHERWISE INDICATED.
8. (8) USE ELECTRICAL LINE LABELS (ITEM 36) TO IDENTIFY EACH END OF THE 13 TYGON TUBE LINES (ITEM 28) WITH A NUMERIC IDENTIFIER. PLACE LABELS EVERY 12 INCHES ± 3 INCHES ON THE FIRST 3 FEET OF BOTH ENDS OF EACH TYGON TUBE (ITEM 28).
9. QC SHALL VERIFY TUBE LABELING (ITEM 36) ON LINES 1 THRU 13 (ITEM 28) AS SPECIFIED IN GENERAL NOTE 8 BEFORE ASSEMBLY INTO ITEM 3.
10. CUT EACH PIECE OF C-FLEX TUBE (ITEM 35) 3" LONG. WITH A FINE POINT FELT TIP PEN (SHARPIE) MARK EACH PIECE AND THE C-FLEX CLAMPS (ITEM 34) WITH THE SAME NUMERIC IDENTIFIERS USED ON THE 13 TYGON TUBES (ITEM 28). ATTACH EACH PAIR TO ITS CORRESPONDING LINE WITH THE SAME IDENTIFICATION NUMBER.
11. QC SHALL VERIFY THE LABELING AND INSTALLATION OF EACH C-FLEX TUBE (ITEM 35 AND EACH C-FLEX CLAMP (ITEM 34) FOR EACH LINE, 1 THRU 13, AS SPECIFIED IN GENERAL NOTE 10.
12. FABRICATION OF NEW TUBE BUNDLE ASSEMBLIES (ITEM 3) WILL BE PERFORMED IN A CLEAN WORK AREA. WORK SURFACES AND TOOLS MUST BE FREE OF ANY TYPE CLEANING RESIDUE, OILS OR OTHER CHEMICALS.
13. (4) EXISTING TUBE BUNDLE ASSEMBLIES (H-2-825301-030, ITEM 3) SHALL HAVE THEIR EXISTING 1/8" PFA TUBE (ITEM 27) REMOVED AFTER EACH SAMPLE EVENT AND A REPLACEMENT REINSTALLED IN THE FIELD BY OPERATIONS PERSONNEL.
14. EACH TUBE BUNDLE ASSEMBLY FABRICATED WILL HAVE AN INDIVIDUAL IDENTIFICATION TAG ATTACHED TO THE ISVS CART END OF THE ASSEMBLY AND PLACED IN A CLEAN PLASTIC BAG AND SEALED BEFORE PLACEMENT INTO SPARES.

(GENERAL NOTES CONTINUED ON SHEET 4)

## SAMPLING HEAD SORPTION COMPONENTS/MATERIALS FOR TYPE 4 ISVS SAMPLING HEAD

| SORBENT TUBE | DESCRIPTION | VENDOR | VENDOR SAMPLING MEDIA NAME | VENDOR CATALOG NUMBER | REFERENCE |
|---|---|---|---|---|---|
| TRIPLE SORBENT TRAP (TST) | 3 BEDS OF SORBENT MEDIA, EACH SUCCESSIVE BED HAVING GREATER RETENTION FOR ORGANIC VAPORS. | SUPELCO | • CARBOSIEVE SIII<br>• CARBOTRAP<br>• CARBOTRAP C | • 1-0184<br>• 2-0287<br>• 2-0309 | LAB PROCEDURE LA-549-403 |
| INORGANIC VAPOR SAMPLING | 3 BEDS OF SORBENT MEDIA (WATER AMMONIA & NITROUS OXIDES) EACH PERFORMING A DIFFERENT ACTION. | SKC-WEST | • SILICA GEL<br>• CARBON BEADS<br>• MOLECULAR SIEVE WITH OXIDIZER | • 226-10-04<br>• 226-29<br>• 226-40 | LAB PROCEDURE LA-549-402 |
| POLYURETHANE FOAM (PUF) | SORBENT TRAP OF POLYURETHANE FOAM (SEMI-VOLATILE ORGANICS) | SUPELCO | • ORBO-1000<br>• PRECLEANED PUF PLUG | • 2-0057<br>• 2-0600-U | LAB PROCEDURE LA-523-428 |
| SOx TRAP | SULFUR OXIDES SORBENT TRAP | SKC-WEST | ST TREATED CARBON BEADS | 226-80 | |
| PARTICULATE FILTER | FILTERS FOR CAPTURING PARTICLES | MILLIPORE | • FILTER HOUSING<br>• FILTER MATERIAL | • SX0001300<br>• AP15-047-00 | WORK PACKAGE: 14 TUBE SAMPLE ASSEMBLY DWG |
| TRITIUM TRAP | TRAP FOR CAPTURING TRITIUM | SKC-WEST | SILICA GEL | 226-10-04 | WORK PACKAGE: 14 TUBE SAMPLE ASSEMBLY DWG |
| RETAINER FOR SORBANTS | GLASS WOOL | SUPELCO | GLASS WOOL: SALINE TREATED | 20411 | |
| THERMAL DESORPTION TUBES | VARIOUS DESORPTION MATERIALS AS DEFINED BY TSAP | SUPELCO | • CARBOTRAP 300<br>• AIR TOXICS (2 BED)<br>• CARBOPACK B<br>• CARBOSIEVE SIII<br>• TENAX GR<br>• TENAX TA<br>• CHROMOSORB 106 | • 2-5050<br>• 2-5051<br>• 2-5052<br>• 2-5053<br>• 2-5054<br>• 2-5055<br>• 2-5056 | |

## PARTS/MATERIAL LIST

| QTY REQD -070 | -060 | -050 | -040 | -030 | -020 | -010 | PART/DASH NUMBER | NOMENCLATURE/DESCRIPTION | MATERIAL/REFERENCE | SHEET | ITEM NO |
|---|---|---|---|---|---|---|---|---|---|---|---|
| 1 | | | | | | | -010 | SAMPLE HEAD ASSEMBLY | | 1 | 1 |
| | | | | | | 1 | -020 | MODEL 2 UN-FILTERED SAMPLE HEAD ASSEMBLY | | 2 | 2 |
| | | | | | | 1 | -030 | 14 TUBE-TUBE BUNDLE ASSY | | 3 | 3 |
| | | | | | | 1 | -040 | SAMPLE HEAD ASSEMBLY | | 2 | 4 |
| | | | 1 | | | | -050 | RETAINER ASSEMBLY | | 2 | 5 |
| | | | | | | AR | -060 | SAMPLE TUBE ASSEMBLY | | 1 | 6 |
| | | | | | | | -070 | SAMPLE HEAD ASSY, VENT SAMPLING | | 2 | 7 |
| | | | | | | | | | | | 8 |
| | | | 1 | | | | -001 | BODY | ANY 300 SERIES SST | 2 | 9 |
| | | | 1 | | | | -002 | FRIT HOLDER | TEFLON | 2 | 10 |
| | | | 1 | | | | -003 | THRUST WASHER | TEFLON | 2 | 11 |
| | | | 1 | | | | -004 | RETAINER | ANY 300 SERIES SST | 2 | 12 |
| | | | | | | 1 | -005 | SAMPLE HEAD FOR UNFILTERED OPN | ANY 300 SERIES SST | 2 | 13 |
| | | | | | | | -006 | DELETED | | | 14 |
| | | | | | 1 | | -007 | SAMPLE HEAD | ANY 300 SERIES SST | 2/3 | 15 |
| | | | | | 1 | | -008 | 14 LINE ALIGNMENT GUIDE | TEFLON | 2/3 | 16 |
| | | 1 | | | | | -009 | RETAINER | ANY 300 SERIES SST | 2 | 17 |
| | | | 13 | | 13 | | -011 | TUBING CONNECTOR, ø1/4 X HEAVY WALL TUBING | ANY 300 SERIES SST | 2/3 | 18 |
| | | | 1 | | 1 | | -012 | BULKHEAD TOP COLLAR (14 LINE) | UHMW (PLASTIC) | 2/3 | 19 |
| | | | | | | 1 | -013 | WASHER, PLAIN, 7/8" (ALTERED) | ANY GRADE CS | | 20 |
| | | | | | | 1 | -014 | PUF ADAPTER | TEFLON | 1/3 | 21 |
| | | | 9 | | | | -015 | PORT CONNECTOR, 1/4, (ALTERED) | SWAGELOK SS-401-PC | 2/3 | 22 |
| | | | 1 | | 1 | | 80PK-1 | THERMOCOUPLE, TYPE K BEAD PROBE | FLUKE | 1 | 23 |
| | | | | | | AR | 2-5069 | SAMPLING CAP | SUPELCO | 1 | 24 |
| | | | 1 | | 1 | | PV10-14-RL | RING, LUG #1/4 - 10-12 AWG | PANDUIT OR EQUIVALENT | 2 | 25 |
| | | | AR | AR | AR | | 1768967 | WIRE, 10 GAUGE COPPER INSULATED GREEN X 60 FT L | STONEWAY ELECTRIC OR EQUIVALENT | 2/3 | 26 |
| | | | | 1 | | | 14-169-17B | TUBE, 1/8" ID X 1/16" W PFA (TEFLON) X 50 FT L (SUMMA LINE) | FISHER SCIENTIFIC OR EQUIVALENT | 1/3 | 27 |
| | | | | 13 | | | 14-169-1E | TUBE, 1/8" ID X 1/4" OD TYGON X 50 FT L (SORBENT & TST SAMPLE LINES) | FISHER SCIENTIFIC OR EQUIVALENT | 3 | 28 |
| | | | AR | AR | AR | | EXPP-K-20-SLE | WIRE, THERMOCOUPLE 20 GAUGE TYPE K SOLID X 50 FT L | OMEGA OR EQUIVALENT | 2/3 | 29 |
| | | | 1 | 1 | 1 | | NMP-K-M | CONNECTOR, THERMOCOUPLE - MALE | OMEGA OR EQUIVALENT | 2/3 | 30 |

(PARTS/MATERIAL LIST CONTINUED ON SHEET 4)

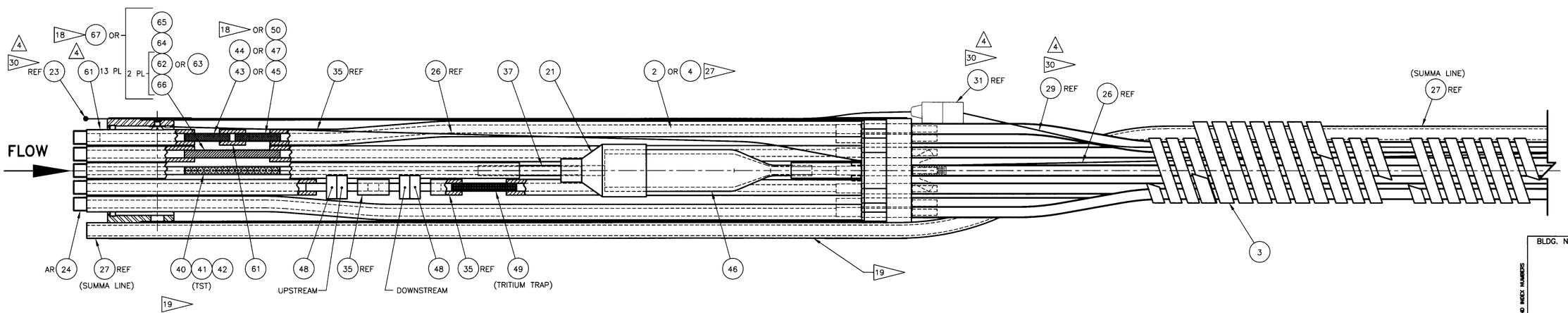


(1) 14 TUBE SAMPLE HEAD ASSY
SCALE: 1/1
(SHOWN WITH EXAMPLE CONFIGURATION OF MODEL 2 UN-FILTERED SAMPLE HEAD ASSY, ITEM 2)

| DWG NO | TITLE | REF NUMBER | TITLE |
|---|---|---|---|
| DRAWING TRACEABILITY LIST | | REFERENCES NEXT USED ON AS ALLOCATED | |

| REV NO | DESCRIPTION | REV BY DATE |
|---|---|---|
| 4 | REVISED PER ECN 656719, 657954, 657983, 657993 & 657994 | DMH 8/02 |

REVISIONS

| | NAME | DATE | COMPANY |
|---|---|---|---|
| DRAWN BY | DW WELCH | 4/98 | |
| CHECKED | | | |
| APPD BY | R SKORGE | 4/98 | |
| APPD BY | DAVID DEFORD | 4/98 | |
| APPD BY | JC PURCELL BY CC MAIL | 5/98 | |
| DESIGN AUTHORITY | GP JANICEK | | |

U.S. DEPARTMENT OF ENERGY
Office of River Protection

IN SITU SAMPLE HEAD ASSEMBLY & DETAILS

| SIZE | BLDG NO | INDEX NO | DWG NO | REV |
|---|---|---|---|---|
| F | 241G | 4600 | H-2-825301 | 4 |
| SCALE NOTED | EDT 603277 | | SHEET 1 OF 5 | |

22273

BLDG. NO.
INDEX NO.
THIS SPACE RESERVED FOR BUILDING AND INDEX NUMBERS
DWG NO H-2-825301 SH 1 OF 5 REV 4

DOE_TB_F.DWG (01-01)