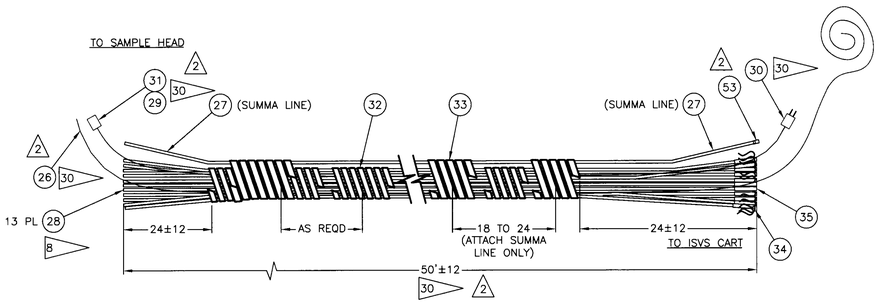

3 14 TUBE – TUBE BUNDLE ASSEMBLY
SCALE: 1/8

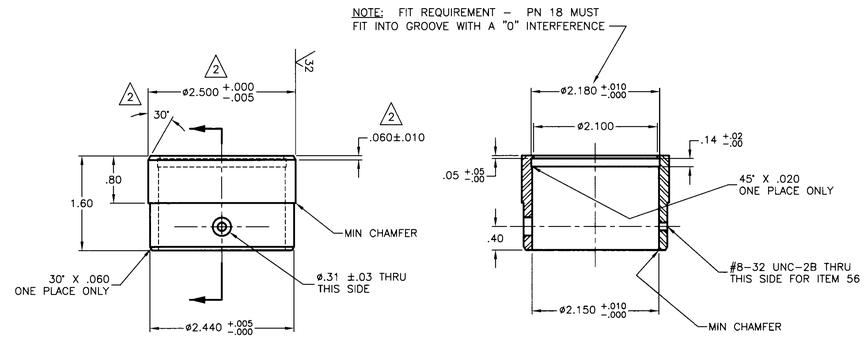

15 SAMPLE HEAD
SCALE: FULL

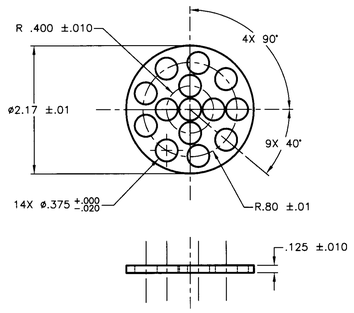

16 14-LINE ALIGNMENT GUIDE
SCALE: FULL

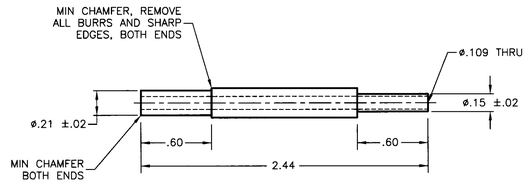

18 TUBING CONNECTOR
SCALE: 2/1

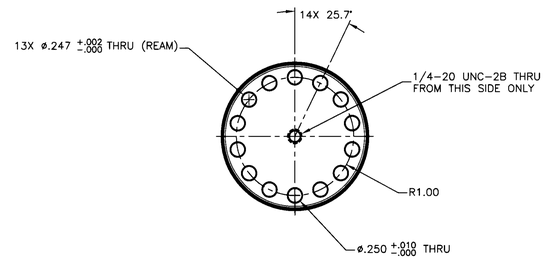

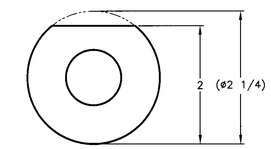

20 WASHER (ALTERED)
SCALE: FULL

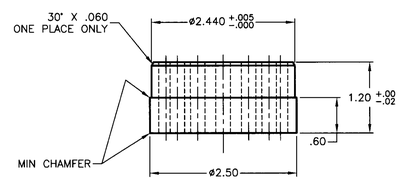

19 BULKHEAD TOP COLLAR
SCALE: FULL

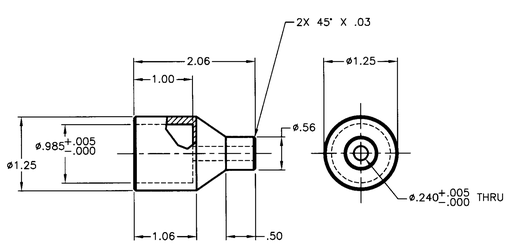

21 PUF ADAPTER
SCALE: FULL

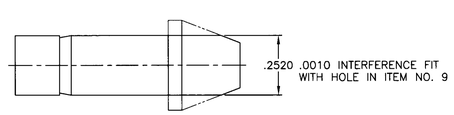

22 PORT CONNECTOR, (ALTERED)
SCALE: 4/1

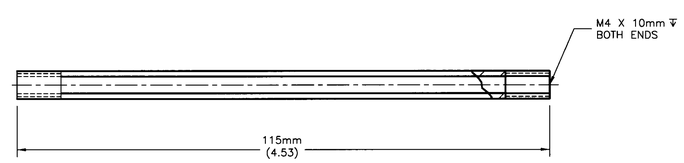

65 SAMPLE TUBE
SCALE: 2/1

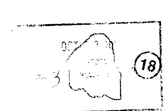

FOR GENERAL NOTES AND PARTS LIST SEE SHEET 1.

THIS SPACE RESERVED FOR BUILDING AND INDEX NUMBERS

BLDG. NO.

INDEX NO.

DWG NO	TITLE	REF NUMBER	TITLE
DRAWING TRACEABILITY LIST		REFERENCES	
		NEXT USED ON	AS ALLOCATED

REV NO	DESCRIPTION	REV BY DATE	ENGR	COMPANY
2	REVISED PER ECN 657954, 657983 & 657993	DMH 8/02		

REVISIONS

	NAME	DATE	COMPANY
DRAWN BY	J.C. DALE	1/00	CODEM
APPROVED	G.W. WILSON	1/00	CODEM
DOC. CNTL	DD WANNER	1/00	CNG
APPR			
DESIGN AUTHORITY	GP JANICEK	1/00	CNG

U.S. DEPARTMENT OF ENERGY
Office of River Protection

IN SITU SAMPLE HEAD ASSEMBLY & DETAILS

SIZE	BLDG NO	INDEX NO	DWG NO	REV
F	241G	4600	H-2-825301	2

SCALE SHOWN — ECN-6556420 — SHEET 3 OF

7301 — DOC_TB_F.DWG (01-01)

DWG NO H-2-825301 REV 2 SH 3 OF