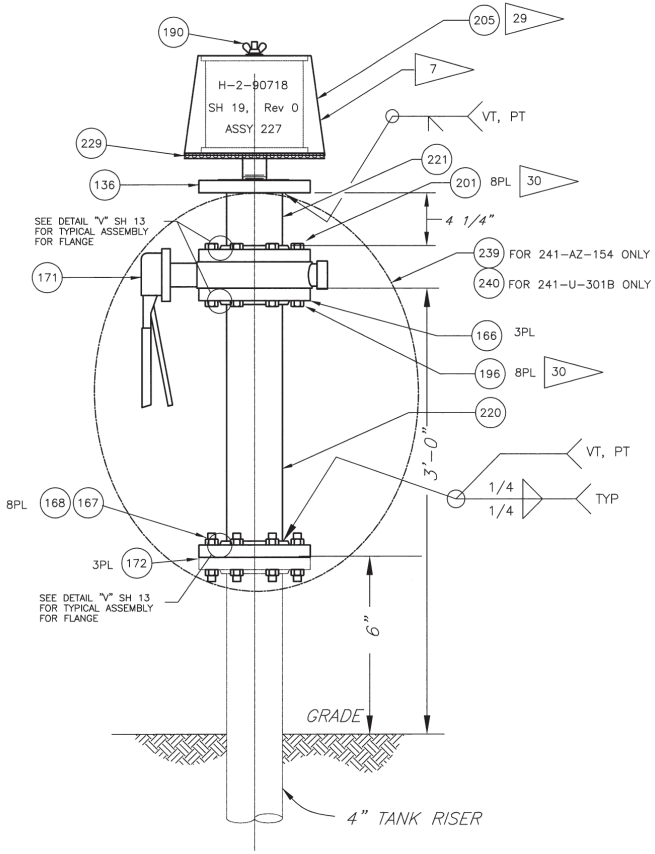

227 40 CFM BREATHER FILTER ASSY – CT

SCALE : 1/4" = 1"

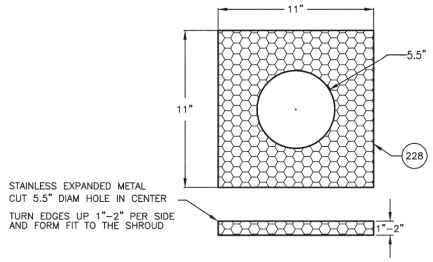

229 40 CFM FILTER BIRD SCREEN

SCALE: NONE

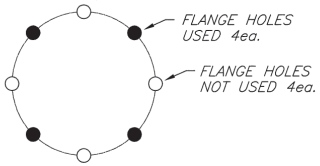

INSTALLED FASTENER PATTERN (FOR ITEMS 239 AND 240)

SCALE: NONE

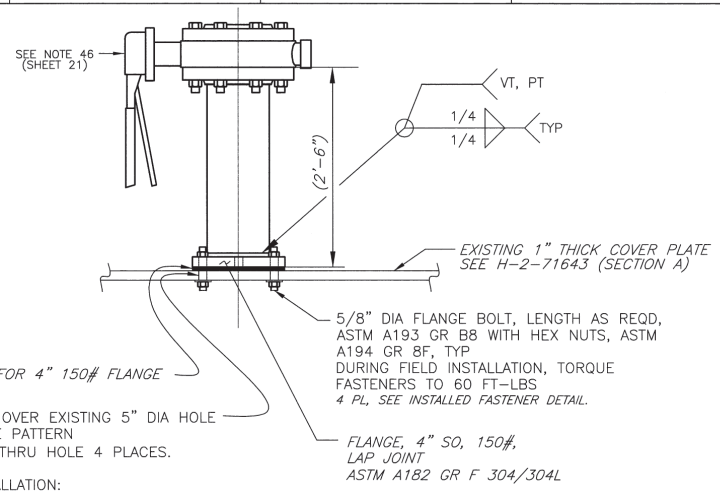

ALTERNATE INSTALLATION:
USE FLANGE TO LOCATE HOLES ON COVER PLATE.
DRILL AND BOTTOM TAP (3/4" MINIMUM DRILL DEPTH) HOLES TO MATCH 5/8" DIA FLANGE BOLT, LENGTH AS REQD, ASTM A193 GR B8, TYP

240 241-U-301B MOUNTING DETAIL

SCALE : NONE

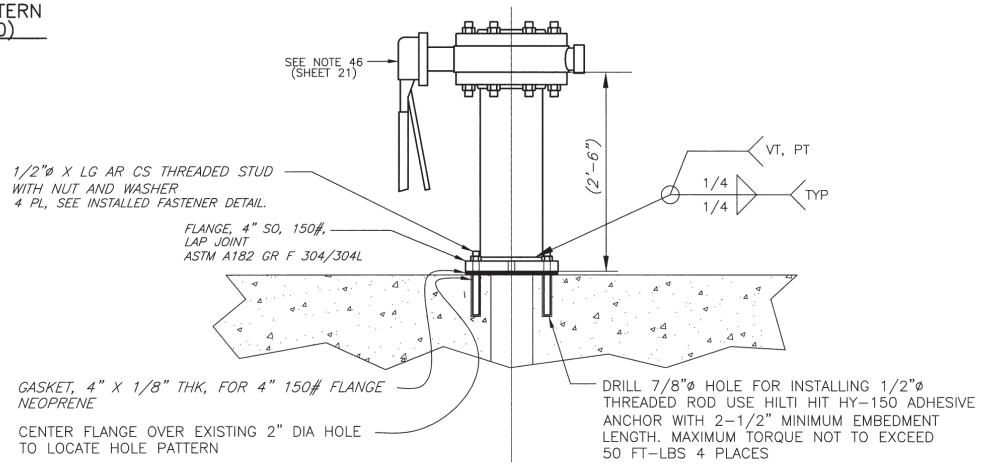

239 241-AZ-154 MOUNTING DETAIL

SCALE : NONE

NOV 28 2006
DATE:
STAT:
IP

DWG NO	TITLE	REF NUMBER	TITLE
		REFERENCES	
DRAWING TRACEABILITY LIST		NEXT USED ON H-2-90718 SH 1	

REV NO	DESCRIPTION	REV BY DATE	ENGR COMPANY
2	REVISED PER ECN 724029-R0	SW 11/06	CHG

REVISIONS

NAME	DATE	
DRAWN BY J.J. JANICEK	01/06	DRAWN
CHECKED		CHECK
DESIGN APVD		
DES ENGR CHRISTO GAUCK	12/06	DESIGN
APVD		
APVD		
APVD		
DESIGN AUTHORITY		ENGR
		CHG

U.S. DEPARTMENT OF ENERGY
Office of River Protection

PIPING
AIR FILTER INSTALLATION
ATMOSPHERIC BREATHING

SIZE	BLDG NO	INDEX NO	DWG NO	REV
F	241C	8900	H-2-90718	2

SCALE NONE | ECN-723374-R2 | SHEET 19 OF

21558 | STFLEX.DWG (03-98)

H-2-90718 | SH 19 OF | REV 1