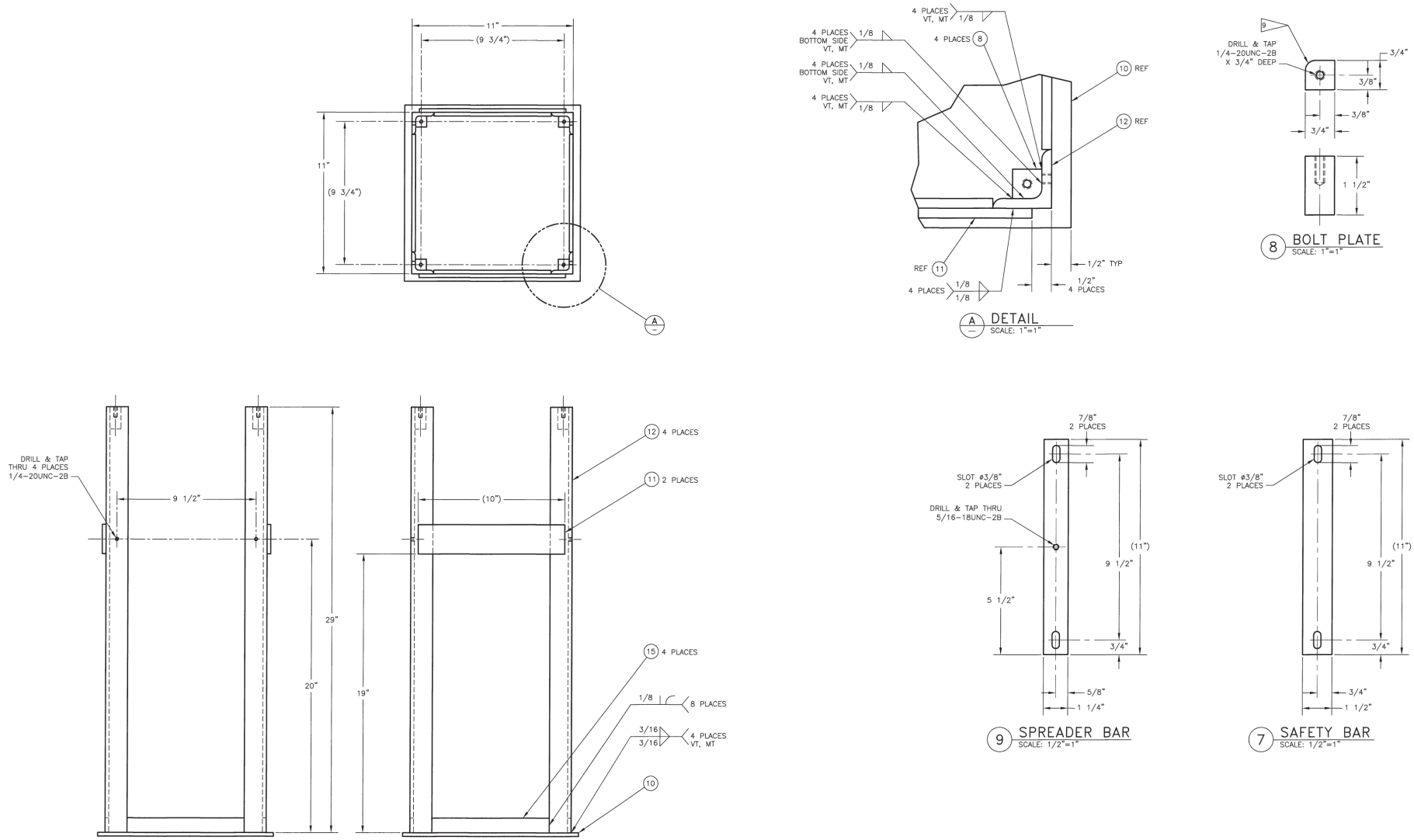

A DETAIL
SCALE: 1"=1"

8 BOLT PLATE
SCALE: 1"=1"

9 SPREADER BAR
SCALE: 1/2"=1"

7 SAFETY BAR
SCALE: 1/2"=1"

2 FILTER LIFT CAGE WELDMENT
SCALE: 1/4"=1"

JUN 19 2008
DATE: 3
STA: 3
REV 0

DWG NO	TITLE
DRAWING TRACEABILITY LIST	

REF NUMBER	TITLE
H-14-107502	DRAWING TREE

REFERENCES
NEXT USED ON H-14-107505

REVISIONS

NAME	DATE	COMPANY
DRAWN BY JT FOSS	02/14/08	CDES

U.S. DEPARTMENT OF ENERGY
Office of River Protection

FILTER LIFT CAGE ASSEMBLY

SIZE	BLDG NO	INDEX NO	DWG NO	REV
F	241G	8409	H-14-107513	0

SCALE AS SHOWN | EDT 822753 | SHEET 2 OF

29931

DOE_TB_F.DWG (01-01)

DWG NO H-14-107513 SH 2 OF REV 0