ENGINEERING DATA TRANSMITTAL

1. EDT 825725

1A. Page 1 of 7

2. To: (Receiving Organization) Distribution	3. From: (Originating Organization) Columbia Energy & Environmental Services, Inc.	4. Related EDT No.: NA 5. Structure Location: AX241
6. Proj./Prog./Dept./Div.: AX- Farm Waste Retrieval	7. Responsible Engineer/Design Agent: Mark Dallas	8. System Designator: AX241-VTP 9. Building No.: 241AX

10. Originator Remarks:
Design verification performed per Columbia Energy procedure CE-ES-3.3 This drawing supports design, procurement, and fabrication and does not modify configuration, qualification, or evaluation of installed equipment, and will support installation/construction when included in a work package.

11. Technical Baseline Document ☒ Yes ☐ No

12. Equipment ID No. (EIN):
POR383-VTP-DMST-001,002
POR384-VTP-DMST-001,002

13. Permit/Permit Application No.:
NA

14. USQ No.: R- PER TELECON FOR RD SMITH ☒ N/A-8
Mark DALLAS Mark E. Dallas 9.19.14
USQ Evaluator Sign/Date

14(A). TBDs or HOLDs In the Data Transmitted? ☐ Yes ☒ No

16. Purchase Order No.:
NA

15. PrHA Screening No.: ☐ N/A
PER TELECON FOR RD SMITH
Mark DALLAS Mark E. Dallas 9.19.14

14(B). Project Number or Identifier:
T2R02

17. Required Response Date:
NA

18. DATA TRANSMITTED

(A) Item No.	(B) Document/Drawing No.	(C) Sheet No.	(D) Rev. No.	(E) Title or Description of Data Transmitted	(F) Hard-copy or PDF	(G) Approval Desig-nator	(H) Reason for Trans-mittal	(I) Origi-nator Dispo-sition	(J) Receiv-er Dispo-sition
1	H-14-109933	1	0	Moisture Separator Dual Assembly	PDF	NA	1	1	1
				12" Inlet to 14" Outlet					

19. IMPACTED DOCUMENTS – NON ENGINEERING		20. IMPACTED DOCUMENTS – ENGINEERING	
Type of Document	Document Number	Type of Document	Document Number
NA	NA	NA	NA

21. KEY

Approval Designator (G)	Reason for Transmittal (H)	Disposition (I)
See TFC-ENG-DESIGN-C-52	1. Approval 2. Review 3. Distribution	1. Approved 2. Approved w/comment 3. Reviewed no comment 4. Reviewed w/comment 5. Disapproved

22. SIGNATURE/DISTRIBUTION

(H) Reason	(I) Disp.	(J) Name	(K) Signature	(L) Date	(M) MSIN	(H) Reason	(I) Disp.	(J) Name	(K) Signature	(L) Date	(M) MSIN
1	1	Originator D Cap		9/18/14		1	1	AE Design Checker G Wilson		9/18/14	
1	1	Resp. Engr. M Dallas	Mark E. Dallas	9.19.14		1	1	AE Design Verifier K Williams		9/18/14	
1	1	Design Auth. M Dallas	Mark E. Dallas	9.19.14							
1	1	Resp. Mgr. R Bauer		9/19/14							
		QA NA									
		IH&S Engr. NA									
		Env. Engr. NA									

23. DOE APPROVAL (if required)
Ctrl. No. NA

24. Release Date/Station/ID

TOC – INTERIM REVIEW COMMENT RECORD (RCR)

1. Date	2. Review No.
07/21/2014	
3. Project No. T2R02	Page 1 of 2

5. Document Number(s)/Title(s)	6. Program/Project/Building Number	7. Reviewer	8. Organization/Group	9. Location/Phone
EDT-825725 H-14-109933	T2R02	M Dallas		

10. Comment Submittal Approval	11. Agreement With Indicated Comment Disposition(s)	12. CLOSED
Date / Organization Manager (optional) (print and sign)	Mark E. DALLAS Mark E. Dallas 9/13/14 Reviewer/Point of Contact (print and sign) 8/29/14 Date DEREK CAP Author/Originator (print and sign)	Mark E. DALLAS Mark E. Dallas 9/18/14 Reviewer/Point of Contact (print and sign) 8/29/14 Date DEREK CAP Author/Originator (print and sign)

13. Comment Summary (Enter quantities of comments by category from 16):

___ Administrative (a) ___ Preference (b) ___ LTA Design Input (c) ___ LTA Design Output (d) ___ N/A (e) ___ Total

13b. Design Agent

14. Item	15. Comments	16. Basis	16a. Category (a, b, c, d, e)	17. Recommendation	18. Reviewer Concurrence Required (Y or N)	19. Disposition (provide justification if NOT accepted)	20. Status
1	Note 13 does not test the unit in accordance with AG-1. Pressure decay test at 1.25X operating pressure and this is the biggest part. We will be doing a BYPASS flow test. This requirement will not be waived as it has been in the past. This is our only way of testing filter seating prior to installation in the farm.			Correct.		Accept.	C
2	Put in a note that special tooling, pry bars and or rubber hammers shall not be permitted for use while installing filter.			Correct.		Accept.	C
3	Consider removing the Fimco part number or say "or engineering equal" and stick to the requirements of the unit to adequately flush the system. This unit is not actually part of the moisture separator, so it's			Correct.		Accept. Replaced with note establishing flow and pressure requirements for a flush cycle.	C

TOC – INTERIM REVIEW COMMENT RECORD (RCR)	1. Date 07/21/2014	2. Review No.
	3. Project No. T2R02	Page 2 of 2

14. Item	15. Comments	16. Basis	16a. Category (a, b, c, d, e)	17. Recommendation	18. Reviewer Concurrence Required (Y or N)	19. Disposition (provide justification if NOT accepted)	20. Status
	not important to specify mfg. rather the requirements of the unit to do a good job.						
4	Check the wording on how much this system weighs. Not sure it's that important other than for calculation purposes. Consider changing the note to make them weigh the units after fabrication and label it with the actual weights.			Correct.		Accept. Added notes to the frame drawing for labeling weight as well as the moisture separator assembly drawings.	C
5							

NOTE: Item # 16 Categories: (a) Administrative, (b) Preference, (c) LTA Design Input, (d) LTA Design Output, or (e) N/A

TOC – INTERIM REVIEW COMMENT RECORD (RCR)

1. Date	2. Review No.
07/21/2014	-
3. Project No. T2R02	Page 1 of 1

5. Document Number(s)/Title(s)	6. Program/Project/Building Number	7. Reviewer	8. Organization/Group	9. Location/Phone
EDT-825725 H-14-109933	T2R02	J Foster		

10. Comment Submittal Approval	11. Agreement With Indicated Comment Disposition(s)	12. CLOSED
Date: ____ Organization Manager (optional) (print and sign): ____	Mark E. DALLAS Mark E. Dallas 9/13/14 Reviewer/Point of Contact (print and sign) Date: 9/29/14 Derek Cap Author/Originator (print and sign)	Mark E. DALLAS Mark E. Dallas 9/13/14 Reviewer/Point of Contact (print and sign) Date: 9/29/14 Derek Cap Author/Originator (print and sign)

13. Comment Summary (Enter quantities of comments by category from 16):

____ Administrative (a) ____ Preference (b) ____ LTA Design Input (c) ____ LTA Design Output (d) ____ N/A (e) ____ Total

13b. Design Agent: CSSS

14. Item	15. Comments	16. Basis	16a. Category (a, b, c, d, e)	17. Recommendation	18. Reviewer Concurrence Required (Y or N)	19. Disposition (provide justification if NOT accepted)	20. Status
1	Provide access platform to reach all valves, obtain readings from DPI gages, obtain dose rates, and calibrate DPI gages.			Correct.		Acknowledged. Per management the means of access to the gauges will be provided using temporary platforms (i.e. scaffold).	C
2	Need to be able to access all valves and labels with shielding installed.			Correct.		Accept. Where feasible valves have been located outside the shielding.	C
3	Delete gas power skid sprayer and provide raw water distribution to all demister flush systems.			Correct.		Accept.	C
4	Each demister should be labeled separately instead of both being called DMST-001.			Correct.		Accept.	C
5	Why is the demister labeled with POR383? Shouldn't all the demister be preceded with AX241-VTP-DMST-XXX?			Correct.		Accept.	C
6							

NOTE: Item # 16 Categories: (a) Administrative, (b) Preference, (c) LTA Design Input, (d) LTA Design Output, or (e) N/A

TOC – INTERIM REVIEW COMMENT RECORD (RCR)

1. Date	2. Review No.
07/21/2014	
3. Project No.	Page 1 of 1
T2R02	

5. Document Number(s)/Title(s)	6. Program/Project/Building Number	7. Reviewer	8. Organization/Group	9. Location/Phone
EDT-825725 H-14-109933	T2R02	R Fox		

10. Comment Submittal Approval	11. Agreement With Indicated Comment Disposition(s)	12. CLOSED
Date: ____ Organization Manager (optional) (print and sign): ____	Mark E. DALLAS Mark E. Dallas 9/13/14 Reviewer/Point of Contact (print and sign) Date: 8/29/14 DEREK CAP Author/Originator (print and sign)	Mark E. DALLAS Mark E. Dallas 9/13/14 Reviewer/Point of Contact (print and sign) Date: 8/29/14 DEREK CAP Author/Originator (print and sign)

13. Comment Summary (Enter quantities of comments by category from 16):

____ Administrative (a) ____ Preference (b) ____ LTA Design Input (c) ____ LTA Design Output (d) ____ N/A (e) ____ Total

13b. Design Agent: CBES

14. Item	15. Comments	16. Basis	16a. Category (a, b, c, d, e)	17. Recommendation	18. Reviewer Concurrence Required (Y or N)	19. Disposition (provide justification if NOT accepted)	20. Status
1	Delete gas powered skid sprayer and provide raw water distribution to the demister skids. Including fuel powered equipment in a permanent design might lead us into further permitting activities for environmental compliance.			Correct.		Accept.	C
2							
3							
4							
5							
6							

NOTE: Item # 15 Categories: (a) Administrative, (b) Preference, (c) LTA Design Input, (d) LTA Design Output, or (e) N/A

TOC – INTERIM REVIEW COMMENT RECORD (RCR)

1. Date	2. Review No.
07/21/2014	
3. Project No. T2R02	Page 1 of 1

5. Document Number(s)/Title(s)	6. Program/Project/Building Number	7. Reviewer	8. Organization/Group	9. Location/Phone
EDT-825725 H-14-109933	T2R02	Robocker	A/AX Eng	373-6563

10. Comment Submittal Approval	11. Agreement With Indicated Comment Disposition(s)	12. CLOSED
Date: ____ Organization Manager (optional) (print and sign): ____	Reviewer/Point of Contact (print and sign): Mark E. DALLAS Mark E. Dallas 9/13/14 Date: 8/29/14 Author/Originator (print and sign): DEREK CAP	Reviewer/Point of Contact (print and sign): Mark E. DALLAS Mark E Dallas 9/13/14 Date: 8/29/14 Author/Originator (print and sign): DEREK CAP

13. Comment Summary (Enter quantities of comments by category from 16):

____ Administrative (a) ____ Preference (b) ____ LTA Design Input (c) ____ LTA Design Output (d) ____ N/A (e) ____ Total

13b Design Agent: CBES

14. Item	15. Comments	16. Basis	16a. Category (a, b, c, d, e)	17. Recommendation	18. Reviewer Concurrence Required (Y or N)	19. Disposition (provide justification if NOT accepted)	20. Status
1	Block 5 - POR383 is not a "location"			Put N/A in block 5		Accept.	C
2	Block 8 - POR383-VTP is not a system			N/A or use 241AX-VTP		Accept.	C
3	Block 12 - Put POR383 here			Add		Accept.	C
4							
5							

NOTE: Item # 16 Categories: (a) Administrative, (b) Preference, (c) LTA Design Input, (d) LTA Design Output, or (e) N/A

TOC – INTERIM REVIEW COMMENT RECORD (RCR)

1. Date	2. Review No.
07/21/2014	
3. Project No. T2R02	Page 1 of 1

5. Document Number(s)/Title(s)	6. Program/Project/Building Number	7. Reviewer	8. Organization/Group	9. Location/Phone
EDT-825725 H-14-109933	T2R02	J Lohrashi		

10. Comment Submittal Approval	11. Agreement With Indicated Comment Disposition(s)	12. CLOSED
Date: ____ Organization Manager (optional) (print and sign): ____	Mark E. DALLAS Mark E. Dallas 9/13/14 Reviewer/Point of Contact (print and sign) Date: 8/29/14 DEREK CAP Author/Originator (print and sign)	Mark E. DALLAS Mark E. Dallas 9/13/14 Reviewer/Point of Contact (print and sign) Date: 8/29/14 DEREK CAP Author/Originator (print and sign)

13. Comment Summary (Enter quantities of comments by category from 16):

____ Administrative (a) ____ Preference (b) ____ LTA Design Input (c) ____ LTA Design Output (d) ____ N/A (e) ____ Total

13b. Design Agent: CBRA

14. Item	15. Comments	16. Basis	16a. Category (a, b, c, d, e)	17. Recommendation	18. Reviewer Concurrence Required (Y or N)	19. Disposition (provide justification if NOT accepted)	20. Status
1	Change note 17 to note 11 for item 10, Gas Powered Skid Sprayer.			Correct.		Accept. Deleted gas powered skid sprayer.	C
2	Two item 10 on, Gas Powered Skid Sprayer.			Correct.		Accept. Deleted gas powered skid sprayer.	C
3							
4							
5							
6							

NOTE: Item # 16 Categories: (a) Administrative, (b) Preference, (c) LTA Design Input, (d) LTA Design Output, or (e) N/A

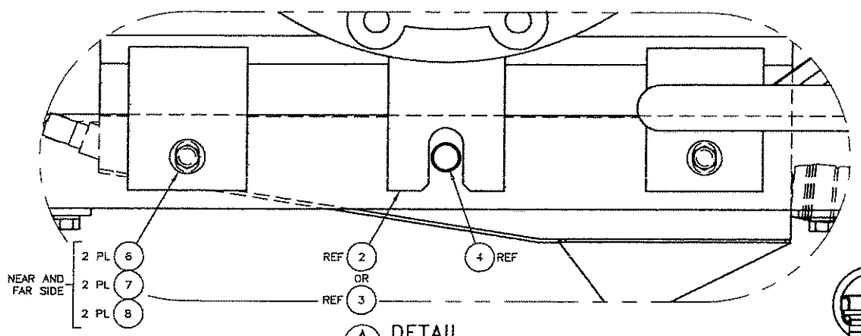

A DETAIL
SCALE: 1/2
2 PL

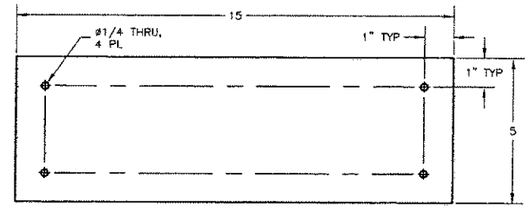

10 LABEL PLATE
SCALE: 1/2

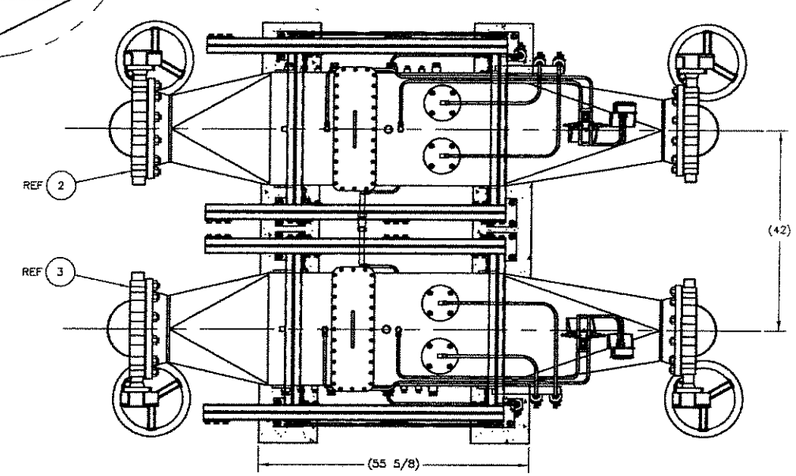

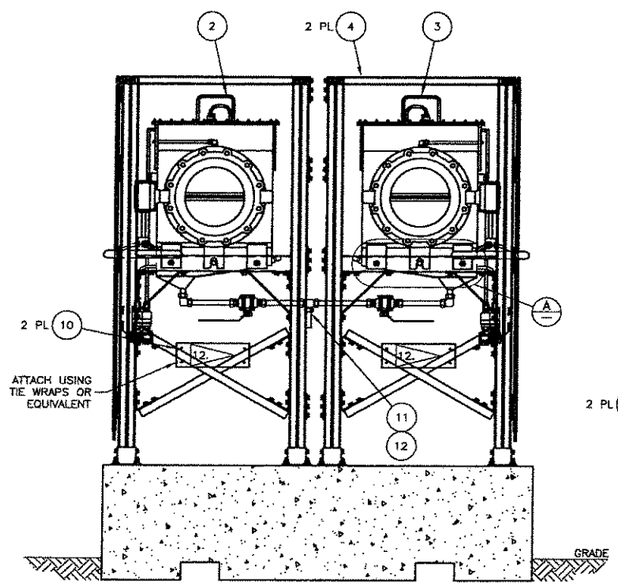

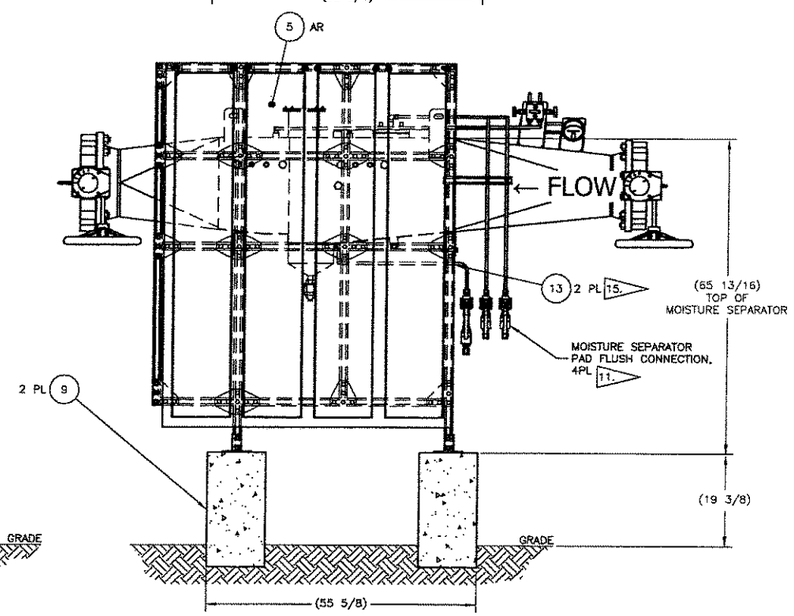

1 MOISTURE SEPARATOR DUAL ASSEMBLY 12" INLET TO 14" OUTLET
SCALE: 1/12

PARTS LIST/MATERIAL LIST

QTY -010	PARTS / DASH NUMBER	NOMENCLATURE/DESCRIPTION	MATERIAL/REFERENCE	SHEET	ITEM NO
X	-010	MOISTURE SEPARATOR DUAL ASSEMBLY 12" INLET TO 14" OUTLET		1	1
1	H-14-109934-010	MOISTURE SEPARATOR ASSEMBLY #1 12" INLET TO 14" OUTLET		1	2
1	H-14-109935-010	MOISTURE SEPARATOR ASSEMBLY #2 12" INLET TO 14" OUTLET		1	3
2	H-14-109936-010	STRUCTURAL SUPPORT ASSEMBLY		1	4
AR	LI-226	LEAD WOOL BLANKET, 1' X 6', 15 LBS/SQ FT	LANCS (SUPL'D BY CLIENT)	1	5
8		BOLT, HEX, 1/2-13UNC-2A, 3" L	ASTM A307, ZINC PLATED	1	6
8		NUT, HEX, 1/2-13UNC-2B	ASTM 563A, ZINC PLATED	1	7
8		LOCK WASHER, REG HLCL SPR, 1/2	ASTM F844, ZINC PLATED	1	8
2	H-14-109534-010	CONCRETE SUPPORT FOOTING ASSEMBLY		1	9
1	-001	LABEL PLATE, SHEET, 1/8" THK	ASTM A240, 304/304L	1	10
1	SS-1610-3	UNION TEE, 1"	SWAGELOK	1	11
AR		TUBE, 1", .065 THK, LAR	ASTM A269, GR. TP 304L	1	12
2	(32625739)	STRUT, MOUNT CLAMP, 1/2" TUBE	(MCMASTER-CARR)	1	13

GENERAL NOTES: (UNLESS OTHERWISE SPECIFIED)

1. ALL DIMENSIONS ARE IN INCHES.
2. ALL MATERIAL SHALL BE AS SPECIFIED OR AN APPROVED EQUAL QUALITY. ANY MATERIAL SUBSTITUTION REQUIRES WRITTEN APPROVAL OF THE PURCHASER.
3. DESIGN, FABRICATION AND TESTING REQUIREMENTS ARE IN COMPLIANCE WITH WRPS SPECIFICATION RPP-SPEC-57518.
4. ESTIMATED WEIGHT OF CONCRETE SUPPORTS APPROX. 2200 LBS PER BLOCK.
5. LABEL VALVES PER H-14-020109 AND TFC-ENG-STD-12 WITH 1/16 THK MATT FINISH LAMINATED PLASTIC WITH WHITE SURFACE WITH BLACK CORE SIZE AR. WIRE TIE OR GLUE WITH RTV 108 OR DOUBLE BACKED TAPE.
6. INSTALL SHIELDING (ITEM 5) PER RPP-CALC-57520.
7. SEE RPP-CALC-57460 FOR STRUCTURAL CALCULATION.
8. FOR HEAT TRACE INFORMATION SEE H-14-109980.
9. CONCRETE FOOTING MAY BE BURIED OR ABOVE GRADE.
10. INSULATE PER H-14-109924 NOTE 13 AFTER HEAT TRACING.
11. PAD FLUSH NOZZLES SHALL BE SUPPLIED WITH PORTABLE WATER FOR DECONTAMINATION FLUSHING. SOURCE SHALL BE CAPABLE OF SUPPLYING 4 GALLONS PER MINUTE AT A PRESSURE OF 150 PSI FOR EACH MOISTURE SEPARATOR. FLOW SUPPLY SHALL BE CAPABLE OF MAINTAINING FLOW AND PRESSURE REQUIREMENTS FOR A MINIMUM OF 10 MINUTES.
12. LOCATE IDENTIFICATION LABELING ON LABEL PLATE (ITEM 13) APPROXIMATE AS SHOWN. HANG LABELS WITH WIRE ROPE IN APPROXIMATE LOCATION AS SHOWN.
    TEXT CONTENTS: PORXXX-VTP-DMST-XXX, SEE H-14-020109
    TEXT TYPE: BLOCK
    TEXT MATERIAL: ACRYLIC ENAMEL
    TEXT COLORS BLACK ON YELLOW BACKGROUND
    TEXT: 1" HIGH CHARACTERS
13. ALL DUCTWORK, DAMPER AND VALVE PRESSURE RETAINING MATERIALS AND MATERIALS USED FOR SUPPORTING ELEMENTS SHALL BE FURNISHED WITH A MANUFACTURES CERTIFICATE OF COMPLIANCE WITH THE SPECIFIED ASME OR ASTM DESIGNATION. CERTIFICATES OF COMPLIANCE SHALL BE TRACEABLE TO THE MATERIAL USED IN THE FABRICATION AS REQUIRED BY ASME AG-1-2012, ARTICLE AA-8000 AND SHALL MEET THE REQUIREMENTS OF NQA-1-2008, REQUIREMENT 7, PARAGRAPH 503. MATERIAL MANUFACTURES CERTIFIED TEST REPORTS (CMTRS) ARE ALSO ACCEPTABLE, AND IF SUPPLIED, SHALL CONTAIN THE TEST RESULTS FROM ALL TESTING SPECIFIED BY THE REFERENCED MATERIAL CODE OR STANDARD, BE TRACEABLE TO THE MATERIAL USED IN THE FABRICATION AS REQUIRED BY ASME AG-1-2012, ARTICLE AA-8000 AND SHALL MEET THE REQUIREMENTS OF NQA-1-2008, REQUIREMENT 7, PARAGRAPH 503.
14. SPECIAL TOOLING (I.E. - PRY BAR OR RUBBER HAMMER) SHALL NOT BE PERMITTED FOR USE WHILE INSTALLING MOISTURE SEPARATOR PAD.
15. INSTALL TUBING AFTER FIELD INSTALLATION OF SUPPORT ASSEMBLY (ITEM 4) AND MOISTURE SEPARATOR ASSEMBLIES (ITEM 2 AND 3). JOIN TUBING WITH UNION (H-14-109934 AND H-14-109935, ITEM 62) AND ROUTE APPROXIMATELY AS SHOWN. ENSURE TUBING CLAMP (ITEM 13) IS INSTALLED ON INNER CHANNEL OF FRAME.

DWG NUMBER	TITLE
DRAWING TRACEABILITY LIST	

REFERENCES	
REF NUMBER	TITLE
H-14-109534	CONCRETE SUPPORT FOOTING ASSEMBLY
H-14-109934	MOISTURE SEPARATOR ASSEMBLY #1 12" INLET TO 14" OUTLET
H-14-109935	MOISTURE SEPARATOR ASSEMBLY #1 12" INLET TO 14" OUTLET
H-14-109936	STRUCTURAL SUPPORT ASSEMBLY
NEXT USED ON H-14-109924	

REVISIONS		
REV	INDX NO	DESCRIPTION

M.R.Q. NO. 241G
INDEX NO. 8900

CAUTION
NOT COMPLETE WITHOUT CURRENT CHANGE DOCUMENTS FROM DATABASE

ATTENTION
DESTROY THIS DOCUMENT BY SHREDDING MAY CONTAIN SENSITIVE INFORMATION

	NAME	DATE
DRAWN BY	M. BERMUDEZ	4/11/24
DESIGN CHECKER		
DESIGN LEAD		
ENGINEERING CHECKER		
TECHNICIAN		

U.S. DEPARTMENT OF ENERGY
Office of River Protection

MOISTURE SEPARATOR DUAL ASSEMBLY 12" INLET TO 14" OUTLET

SIZE F | DRAWING NUMBER H-14-109933 | SHEET 1 | REV 0
SCALE AS SHOWN