DOCUMENT RELEASE FORM

(1) Document Number: RPP-PLAN-52989		(2) Revision Number: 0	(3) Effective Date: 9/26/2012
(4) Document Type: ☐ Digital Image ☐ Hard copy ☒ PDF ☐ Video		(a) Number of pages (including the DRF) or number of digital images: 31	
(5) Release Type	☒ New ☐ Cancel	☐ Page Change	☐ Complete Revision
(6) Document Title:	Test Plan for Determination of the N Factor for a Full-Flow Ball Penetrometer		
(7) Change/Release Description:	New Release		
(8) Change Justification:	N/A		

(9) Associated Structure, System, and Component (SSC) and Building Number:			
(a) Structure Location: N/A		(c) Building Number: N/A	(e) Project Number: N/A
(b) System Designator: N/A		(d) Equipment ID Number (EIN): N/A	

(10) Impacted Documents:	(a) Document Type	(b) Document Number	(c) Document Revision
	N/A	N/A	N/A

(11) Approvals:

(a) Author (Print/Sign): J.R. Follett — Date: 9/26/2012

(b) Reviewer (Optional, Print/Sign): J.E. Meacham — Date: 9/26/2012

(c) Responsible Manager (Print/Sign): N.W. Kirch — Date: 9/26/2012

(12) Distribution:

(a) Name	(b) MSIN	(a) Name	(b) MSIN
Meacham, J.E.	R2-58		
Kirch, N.W.	R2-58		
Sams, T. L.	R2-58		
Gagnon, P.A.	N2-02		
Follett, J.R.	R2-58		

Release Stamp

DATE: Oct 01, 2012 HANFORD RELEASE

(13) Clearance	(a) Cleared for Public Release	(b) Restricted Information?	(c) Restriction Type:
	☒ Yes ☐ No	☐ Yes ☒ No	N/A

(14) Clearance Review (Print/Sign): APPROVED By G. E. Bratton at 1:34 pm, Oct 01, 2012 — Date:

A-6003-881 (REV 3)

Test Plan for Determination of the N Factor for a Full-Flow Ball Penetrometer

J.R. Follett, J.E. Meacham
Washington River Protection Solutions, LLC
Richland, WA 99352
U.S. Department of Energy Contract DE-AC27-08RV14800

EDT/ECN:	DRF	UC:	N/A
Cost Center:	N/A	Charge Code:	N/A
B&R Code:	N/A	Total Pages:	31

Key Words: Cone penetrometer, BDGRE, N factor, 241-AN-101, 241-AN-106, shear strength

Abstract: This document contains the proposed plan for the testing involved in determining the N Factor for the HYSON 200kN system full-flow 8-cm diameter ball penetrometer using a kaolin/water mix designed to approximate sludge waste characteristics. This device is planned to be used in tanks AN-101 and AN-106 to measure in-situ sludge waste shear strength, which is an important parameter for predicting buoyant displacement gas release events (BDGRE).

TRADEMARK DISCLAIMER. Reference herein to any specific commercial product, process, or service by trade name, trademark, manufacturer, or otherwise, does not necessarily constitute or imply its endorsement, recommendation, or favoring by the United States Government or any agency thereof or its contractors or subcontractors.

APPROVED
By G. E. Bratton at 1:34 pm, Oct 01, 2012

Release Approval Date

DATE:
Oct 01, 2012
HANFORD RELEASE

Release Stamp

Approved For Public Release

RPP-PLAN-52989
Revision 0

Test Plan for Determination of the *N* Factor for a Full-Flow Ball Penetrometer

J. R. Follett
J. E. Meacham
Washington River Protection Solutions

Date Published
September 2012

Prepared for the U.S. Department of Energy
Office of River Protection

Contract No. DE-AC27-08RV14800

EXECUTIVE SUMMARY

Implementation of a new buoyant displacement gas release event (BDGRE) safety basis requires showing that Hanford Site sludge waste maintains low gas fractions as settled solids depth is increased, which is directly related to the shear strength of the waste. Thus, the next step in safety basis development involves determining the in situ shear strength of the sludge in tanks 241-AN-101 and 241-AN-106 to confirm that the sludge wastes have distinctly different physical characteristics than salt slurries. This will be accomplished by taking resistance measurements using a HYSON® 200kN full-flow ball penetrometer, which in conjunction with an empirical value specific to the device, the *N* factor, relates the in situ resistance measurements to shear strength values. Therefore, before the device can be used in a tank, the *N* factor must be determined experimentally. This document contains the proposed plan for the testing involved in determining the *N* Factor for the HYSON® 200kN system full-flow ball penetrometer using a kaolin/water mix designed to approximate sludge waste characteristics.

Kaolin/water mixtures will be used to simulate sludge waste and resistance measurements will be taken for three different weight percent kaolin mixtures designed to approximate the expected shear strength for sludge waste. The mixtures will be loaded into 500 gallon enclosed tanks, which each have five penetrations in the top. Three continuous resistance measurements will be taken for each tank with the full-flow ball penetrometer and two additional measurements will be taken with a handheld shear vane. The handheld shear vane will directly measure the shear strength of the mixture and will provide necessary data which, when combined with the resistance data taken with the penetrometer, will allow for calculation of the *N* factor.

TABLE OF CONTENTS

1.0 INTRODUCTION 1
1.1 Purpose 1
1.2 Background 1
1.3 Full-Flow Penetrometer Methodology 2
2.0 SCOPE 4
3.0 TEST REQUIREMENTS 4
4.0 TEST COORDINATION 4
4.1 Precautions and Limitations 4
4.2 Sequence of Testing 5
4.3 Plant Conditions 5
4.3.1 Electrical Requirements 5
4.3.2 Water Availability 5
4.4 Special Equipment Needed 5
5.0 DATA COLLECTION AND TEST RESULTS REPORTING 6
5.1 Kaolin/Water Makeup Specifications 9
5.2 Data Collection with Full-Flow Penetrometer 9
5.3 Data Collection with Handheld Shear-Vane 11
5.4 Data Analysis 12
6.0 REFERENCES 13

TABLE OF APPENDICES

APPENDIX A - PREPARATION OF TEST MIXTURE A-1
APPENDIX B - HUMBOLDT HANDHELD VANE PRODUCT MANUAL B-1

LIST OF FIGURES

Figure 1-1. Full-flow Ball Penetrometer Photograph. 2
Figure 5-1. 500 gallon Polyethylene Tank Photograph. 6
Figure 5-2. Overhead Diagram Representation of Test Tank Penetrations. 7
Figure 5-3. Photograph of the Test Platform. 8
Figure 5-4. Photograph of the Test Platform Center Opening. 8
Figure 5-5. Side-view Diagram of Data Collection Points in Each Tank. 10
Figure 5-6. Humboldt Handheld Shear-Vane Device. 11

Figure A-1. Plot of Available Wt% Kaolin versus Shear Strength Data. A-3
Figure A-2. Plot of Available Sludge Waste Shear Strength Measurements. A-5

LIST OF TABLES

Table 5-1. Sequence of Full-Flow Penetrometer Testing with Ball Attachments. 10

Table A-1. Summary of Available Shear Strength versus Weight Percent Kaolin Data. A-2
Table A-2. Sludge Waste Shear Strength Measurements Data Analysis. A-4

LIST OF TERMS

Abbreviations and Acronyms

BDGRE	Buoyant Displacement Gas Release Event
CPT	Cone Penetrometer Testing
DST	Double-Shell Tank
PNNL	Pacific Northwest National Laboratory
RCRA	Resource Conservation and Recovery Act of 1976
SSC	Safety System, Structure, or Component
TWINS	Tank Waste Inventory Network System

Units

gal	gallon
in	inch
kg	kilogram
N	Newton
m	meter
Pa	Pascal
V	volts

Variables

A_{ball}	Cross-sectional area of ball attachment, m^2
D_b	Ball diameter, cm
F_p	Pushing force, N
N	N Factor, dimensionless
q_{net}	Net penetration resistance, Pa
s_u	Shear Strength, Pa
w_k	Weight percent kaolin, dimensionless

1.0 INTRODUCTION

1.1 PURPOSE

Implementation of a new buoyant displacement gas release event (BDGRE) safety basis requires showing that Hanford Site sludge waste maintains low gas fractions as settled solids depth is increased, which is directly related to the shear strength of the waste. Resistance measurements will be taken using a HYSON®[1] 200kN full-flow penetrometer with an 8-cm diameter ball attachment, which in conjunction with an empirical value specific to the device, the *N* factor, will relate the in situ resistance measurements to shear strength values. Before in-tank use of the device, the *N* factor must be determined experimentally. This document contains the proposed plan for the testing involved in determining the *N* Factor for the HYSON® 200kN system full-flow 8-cm diameter ball penetrometer using a kaolin/water mix designed to approximate sludge waste characteristics.

1.2 BACKGROUND

Radioactive waste in 28 double-shell tanks (DSTs) generates hydrogen through the radioloysis of water and organic compounds, radiothermolytic decomposition of organic compounds, and corrosion of a tank's carbon steel walls. Nonflammable gases, such as nitrous oxide and nitrogen, are also produced in addition to flammable gases (e.g., ammonia and methane) generated by chemical reactions between various degradation products of organic chemicals present in the tanks. The gases form small bubbles that slowly migrate through the low shear strength settled solids layer. With deep low shear strength salt slurry layers, gas generation rate in the settled solids might exceed gas release through the slow bubble migration process so that a region becomes buoyant with respect to the liquid layer above. The resultant gas release caused by this instability was termed a buoyant displacement gas release event (BDGRE) (RPP-7771). These releases can potentially create flammable gas concentrations in the tank headspace exceeding the lower flammability limit for short durations. Criteria have been developed to prevent forming new tanks that might be susceptible to BDGREs. RPP-PLAN-44573 describes the approach in implementing a new safety basis for preventing BDGREs in more detail.

Delft Hydraulics examined the effect of gas production on the storage capacity of artificial sludge depots (van Kessel and van Kesteren, 2002). Studies showed that gas accumulation occurs as convective and diffusive transport proceeds very slowly. Gas bubbles nucleate and grow, pushing aside the surrounding grain matrix. Resulting stresses initiate cracks around bubbles and if these cracks join, they form channels stretching to the sediment surface along which gas can escape. Channels are only stable to a limited depth below which bubble accumulation may continue until the sediments achieve buoyancy. The gas content at which

[1] HYSON is a trademark of A.P. van den Berg, Heerenveen, Netherlands.

sufficient cracks and channels are formed to balance the rate of gas production with the rate of outflow strongly depends on the constitutive properties of the dredging sludge, including shear strength.

In situ shear strength has never been measured in Hanford sludge wastes, but estimates suggest that shear strengths are an order of magnitude higher than saltcake wastes. The theory developed by Delft might explain why significant gas accumulation and BDGREs have not been observed in sludge tanks, and allow for higher solids accumulation in the DSTs for high shear strength wastes. Analysis, development, and implementation of new BDGRE criteria require waste shear strength measurements in DSTs (RPP-RPT-42504).

1.3 FULL-FLOW PENETROMETER METHODOLOGY

Cone penetrometer testing (CPT) has been used to investigate soil mechanics in a variety of industries for many years and operates by pushing an instrumented cone tip down into the ground at a controlled rate. The resistance on the cone tip is measured and equated to shear strength in the soil. In soft soil sediments the cone penetrometer tip may not provide enough resistance to obtain accurate measurements, thus “full-flow” penetrometers with t-bar or ball probes are used to increase resistance. Penetration of full-flow penetrometers in soft clay forces soil to flow around the penetrometer in a viscous, fluid-like manner. The penetrometer geometry and surface roughness influence soil flow during penetration and the soil undergoes non-localized turbulent shearing. Since the sludge waste in the tanks is expected to be soft in comparison to soils typically measured with piezocone testing, an 8-cm diameter full-flow ball penetrometer tip will be used as a replacement to the conventional conical tip. Full-flow penetrometers provide a measure of the pressure differential necessary to induce soil to flow around a symmetric geometric probe. Figure 1-1 shows a photograph of the ball penetrometer attachment that will be used in testing.

Figure 1-1. Full-flow Ball Penetrometer Photograph.

Measurement of tip resistance is obtained continuously during penetration of the ball penetrometer. This penetration resistance can then be used to determine the shear strength of the waste, or in the case of this test, the kaolin/water mix. Undrained shear strength (s_u) can be estimated as the ratio of net penetration resistance to the *N* factor, as shown in Equation 1-1 (DeJong, Yafrate, and DeGroot, 2010).

$$s_u = \frac{q_{net}}{N} \tag{1-1}$$

Where:

s_u	=	Undrained shear strength, Pa
q_{net}	=	Net penetration resistance, Pa
N	=	Strength factor (*N* factor), dimensionless

The net penetration resistance is not directly determined by the full-flow penetrometer. The data logging system will record the pushing force of the penetrometer as it penetrates the mixture. Using the cross-sectional area of the ball attachment, q_{net} can be determined using Equation 1-2. Thus, combining Equations 1-1 and 1-2 provides shear strength as a function of measured data, as shown in Equation 1-3.

$$q_{net} = \frac{F_p}{A_{ball}} \tag{1-2}$$

Where:

F_p	=	Pushing force, N
A_{ball}	=	Cross-sectional area of ball attachment, m^2

$$s_u = \frac{F_p}{A_{ball} \cdot N} \tag{1-3}$$

Theoretical models have been developed to determine appropriate *N* factors, allowing estimation of the undrained shear strength from penetration resistance measurements. However, these models cannot entirely capture all factors influencing the measured shear strength and may not encompass the range of shear strengths desired. Therefore, site specific empirical relationships calibrated against appropriate references are necessary to develop confidence in the undrained *N* factors predicted from full-flow penetrometer data (DeJong, Yafrate, and DeGroot, 2010).

In this test, the full-flow ball penetrometer system will measure the penetrating force (F_p) and a hand-held shear vane will be used within the same kaolin/water mix to obtain the shear strength (s_u). The *N* factor can then be solved for by simply using Equation 1-4. Use of a shear vane as a data reference to determine the *N* factor is consistent with the methods used by researchers in the field of soil mechanics (DeJong, Yafrate, and DeGroot, 2010).

$$N = \frac{F_p}{s_u \cdot A_{ball}} \tag{1-4}$$

2.0 SCOPE

This testing will involve taking multiple shear strength measurements to determine an appropriate *N* factor for the full-flow penetrometer. Measurements will be taken using both a full-flow ball penetrometer and a handheld shear-vane in a non-radiological area with a sludge simulant of kaolin/water. As such, there are no safety systems, structures, or components (SSCs) involved with this testing. The penetrometer equipment will be set up on the same platform as will be used for in-field measurements of DST waste to serve as an additional guide for future appropriate maneuvering of equipment. This test plan also involves specifications for the required kaolin/water mixtures over the range of shear strengths desired. Testing will demonstrate how to effectively operate the HYSON® 200kN system on the platform to provide penetrometer resistance data and will provide shear strength data from a handheld shear-vane.

3.0 TEST REQUIREMENTS

There are no SSCs to be tested under this test plan and thus a Test Requirements Matrix is not needed. The only acceptance criteria to be applied to this testing involves recording data for each kaolin mixture with both the full-flow penetrometer and the shear-vane. Specifics regarding the number of tests required and the data to be taken will be covered in detail in Section 5.0.

4.0 TEST COORDINATION

This section provides additional detail regarding facility requirements for testing and special needs or limitations for the tests. This testing will be performed at the 2106 HV facility.

4.1 PRECAUTIONS AND LIMITATIONS

No special precautions or limitations are required during testing activities in relation to SSCs, authorization basis impacts, or design basis limitations. The only environmental constraints involve disposal of the kaolin/water sludge simulant mixture. Appropriate disposal of the containers will be required at the conclusion of testing.

The material safety data sheet (MSDS# 064970) indicates that kaolin is a naturally occurring mineral made up of 96-99.9% kaolinite ($H_4Al_2Si_2O_9$) and 0.1-4% silica (SiO_2). Kaolin is not reactive, flammable, or biodegradable, and is not hazardous under the Resource Conservation and Recovery Act (RCRA) (40CFR Part 261). As such, normal waste disposal applies. Dust control is the primary concern because of potential inhalation of silica, but for this testing, the kaolin will already be fully mixed with water and no dust should be present. Coordination with the Sampling Operations group will be required to dispose of the post-test containers.

A Process Hazards Analysis was previously performed for use of the HYSON® 200kN system, as documented in RPP-RPT-49609.

4.2 SEQUENCE OF TESTING

There are no special requirements identified for the sequence of testing. Data will be collected with both a hand operated shear-vane and with the HYSON® 200kN full-flow ball penetrometer at multiple points in each container, but there are no limitations for the order of testing. The method for data collection is described in further detail in Section 5.0.

4.3 PLANT CONDITIONS

4.3.1 Electrical Requirements

The HYSON® 200kN cone penetrometer system uses a 440-480 V, 3 phase power supply.

4.3.2 Water Availability

Water is not required during testing activities.

4.4 SPECIAL EQUIPMENT NEEDED

As will be discussed in Section 5.0, a fork truck will be required throughout testing. The test tanks will sit on pallets and will need to be maneuvered under the platform to align with the penetrometer device. No addition special equipment has been identified for use in the testing described within this document.

5.0 DATA COLLECTION AND TEST RESULTS REPORTING

Data will be collected in three separate 500 gallon polyethylene tanks (shown in Figure 5-1), each filled with a different kaolin/water mixture. Each tank will be filled to about the 425 gallon level (equating to roughly 58 inches from the bottom) with the kaolin/water mixture.

Figure 5-1. 500 gallon Polyethylene Tank Photograph.

Each container has five penetrations in the top to be used for this test. Since measurements are required with both the full-flow penetrometer and the handheld shear vane in order to equate the ball penetrometer resistance to shear strength, both methods will be used in each of the three tanks. The full-flow penetrometer will be used to collect data in three of the holes per tank and the handheld shear vane will be used for the remaining two holes per tank. Figure 5-2 below shows an overhead diagram of a tank to show where the penetrations are located, including spacing between openings.

Figure 5-2. Overhead Diagram Representation of Test Tank Penetrations.

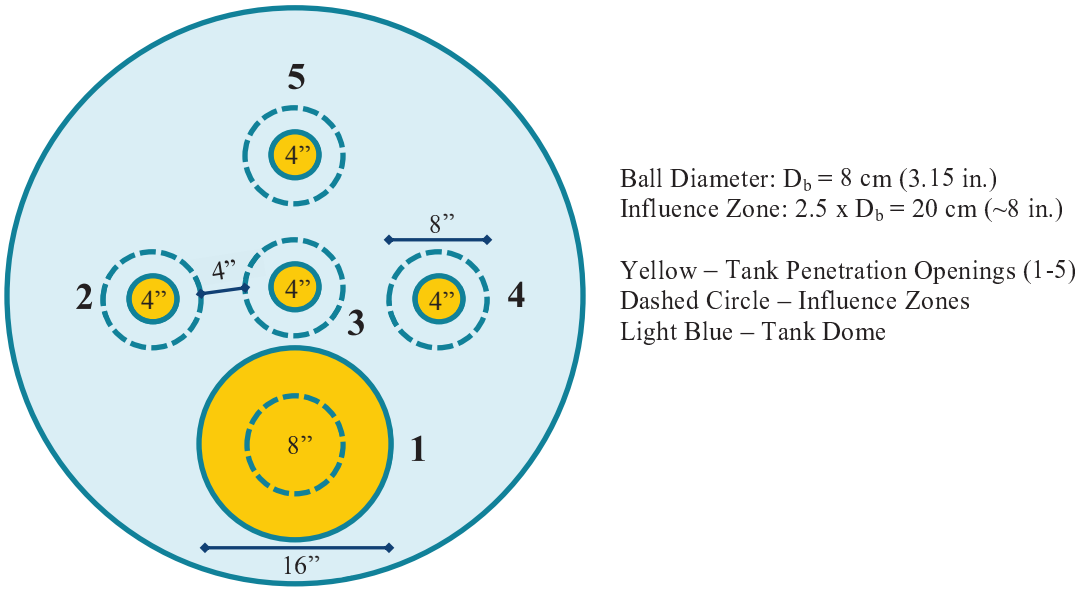

Holes 1, 3, and 5 in Figure 5-2 will be used for data collection with the full-flow penetrometer and holes 2 and 4 will be used for the handheld shear vane. Hole 1 represents the primary tank opening, which is roughly 16 inches in diameter, and the remaining holes were cut by the manufacturer and are 4 inches in diameter. Measurements are designed to be taken on opposite sides of the tank with each measuring device in order to get a representative data set for the simulant. Three measurements are to be taken with the full-flow penetrometer in order to provide additional opportunities to practice use of the device and the data collection software as well as to provide enough test runs for each of the four ball attachments, as discussed in Section 5.2.

Use of the ball penetrometer introduces an ‘influence zone’, which is simply the area of the mixture that is disturbed by pushing the device into the tank. As a general rule of thumb, the influence zone for a ball penetrometer is about 2.5 times the diameter of the device (Yafrate, DeJong, and DeGroot, 2007). Since this test uses a 3.15 inch diameter ball, the influence zone is roughly 8 inches in diameter. Additional influence zones are assumed to exist from the shear vane rotation in holes 2 and 4. The dashed circles in Figure 5-2 represent the influence zones, which shows there are at least 4 inches between the closest zones. Based on these dimensions, 5 total test run measurements can be taken in each tank without interference.

The platform that will be used to house the equipment (shown in Figure 5-3) will have a rectangular opening in the center (shown in Figure 5-4) and the HYSON® 200 kN penetrometer will be positioned over this opening. The system will not be moved once in place on the platform, meaning the tank below will need to be maneuvered under the platform to correctly orient the tank openings with the cone penetrometer rod for each run.

Figure 5-3. Photograph of the Test Platform.

Figure 5-4. Photograph of the Test Platform Center Opening.

Once the tanks are filled with the kaolin/water mix, they will each weigh roughly 6,000 pounds. Steel pallets have been procured for the tanks to sit on. The pallets are rated for a dynamic capacity of 10,000 pounds. The pallet and tank will be maneuvered under the platform before each test with the full-flow penetrometer using a fork truck. Because the opening on the platform will be covered by the hydraulic equipment, there will not be enough room to conduct the handheld shear vane tests through this opening as well. Instead, the tank can be maneuvered to line up the appropriate tank penetration with the edge of the platform and use additional scaffolding where necessary for the two runs per tank with that device. This will allow testing to take place from on top of the platform, but will not require use of the platform center opening. The other alternative is to have scaffolding set up separate from the platform so that measurement with the hand-held shear vane can be conducted while simultaneously lining up the next tank under the platform for penetrometer testing.

5.1 KAOLIN/WATER MAKEUP SPECIFICATIONS

As indicated previously, three different weight percent kaolin mixtures will be required for testing. This will include a 55% kaolin/45% water mix, a 58% kaolin/42% water mix, and a 61% kaolin/39% water mix, by weight percent. Previous shear strength testing using varying weight percent kaolin mixtures were analyzed in Appendix A. Figure A-1shows that shear strengths for the selected kaolin mixtures should be approximately 400 Pa, 700 Pa, and 1,200 Pa, respectively. Figure A-2 shows how those shear strengths compare with DST sludge waste core samples that were analyzed in a laboratory setting.

While these shear strengths do not encompass the overall range of possible sludge wastes that could be encountered in situ, the BDGRE review panel directed calibration to be carried out up to about 1,000 Pa. The justification for not using higher kaolin mixtures goes back to the goal of in-tank deployment. The penetrometer will be used to determine if the sludge strength is significantly higher than salt slurry yield strengths of 100-200 Pa. Therefore, if the sludge waste shows shear strength approaching or higher than 2,000 Pa, then the exact number is not important (WRPS-1105266). The kaolin mixtures selected will allow *N* factor calibration encompassing the shear strengths of importance.

5.2 DATA COLLECTION WITH FULL-FLOW PENETROMETER

The HYSON® 200 kN cone penetrometer system operates by attaching 1 meter extending rods one at a time to feed through a hydraulic push until the ball penetrates to the desired depth. The load cell transmits the ball tip resistance to the I-Control data logger through the I-Cone measuring cable strung through the rods. Force, defined as F_p in Equations 1-2, 1-3, and 1-4, is recorded on a laptop computer connected to the I-Control®[2] data logger through a USB cable. The proprietary *GOnsite!*®[3] software is used to facilitate recording of the data. Operating instructions are provided by the manufacturer, A.P. van den Berg.

Since extension rods must be attached every 1 m, continuous data can be collected over the course of approximately 1 m. The simulant will be filled in the tank to roughly the 58 inch mark (~1.5 m). Proper use of the device requires the penetrometer to be submerged in the simulant and allowed time to equilibrate with the in situ temperature. Allowing 6 inches of space with which to submerge, the ball should be at about the 52 inch level (~1.3 m) before the test commences. The data collection can then be performed continuously through the kaolin/water simulant for 1 m resulting in an ending depth at roughly the 12 inch level (~0.3 m). The orientation of testing is shown in Figure 5-5 where the orange points represent starting or stopping data collection.

[2] I-Control is a trademark of A.P. van den Berg, Heerenveen, Netherlands.
[3] GOonsite! is a trademark of A.P. van den Berg, Heerenveen, Netherlands.

Figure 5-5. Side-view Diagram of Data Collection Points in Each Tank.

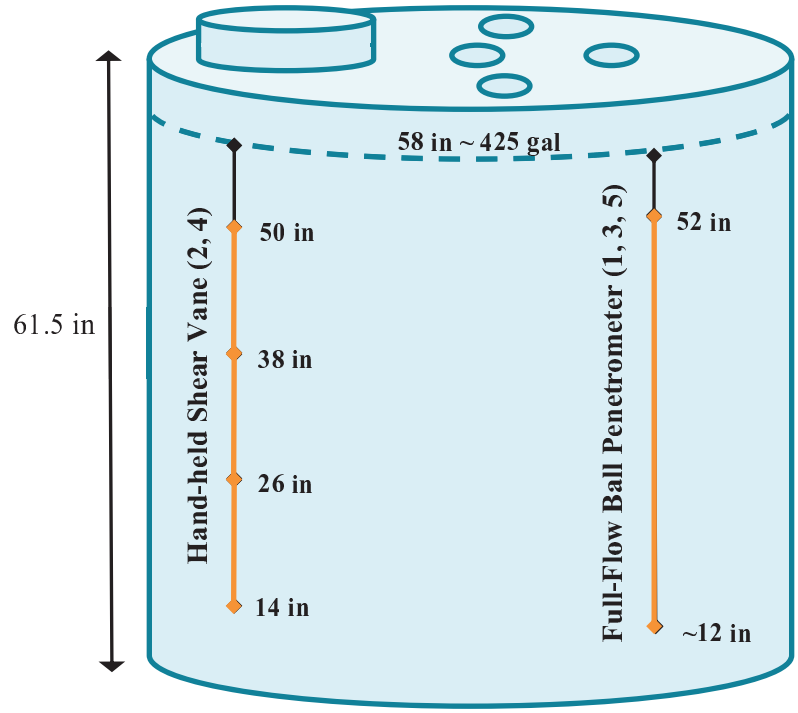

Resistance data should be collected at measurement intervals of 10 mm for penetration at 20 mm/s of an 8-cm diameter ball penetrometer (DeJong et. al., 2010). Assuming these measurement intervals, each continuous run with the full-flow penetrometer should produce 100 data points for penetrating force, resulting in 300 measurements for each simulant.

A total of four ball attachments have been procured. Since the penetrating force measured by the penetrometer is dependent on the roughness of the ball attachment, and since all four balls were custom manufactured, each may have a slightly different roughness and each will be used at various points during testing. The balls should be numbered 1-4 prior to testing and will be switched out between each run following the orientation shown in Table 5-1. The ball attachment used, as well as the tank penetration number (numbering shown in Figure 5-2) should be recorded after each test run.

Table 5-1. Sequence of Full-Flow Penetrometer Testing with Ball Attachments.

Tank	Kaolin (wt %)	Tank Penetration Number		
		1	3	5
1	55	Ball 1	Ball 2	Ball 3
2	58	Ball 4	Ball 2	Ball 1
3	61	Ball 1	Ball 3	Ball 4

As indicated above, three test runs per tank will be conducted using the full-flow penetrometer. This will require the tank to be moved into position with a forklift three separate times to align with tank holes 1, 3, and 5. During this time, the ball attachment can be switched out on the penetrometer. After the three runs have been completed, the tank will be moved under the edge

of the platform, or to secondary scaffolding, and two runs with the handheld shear vane will be completed in tank holes 2 and 4, as discussed in the next section.

Note, a light weight HYSON® 100 kN cone penetrometer system was previously evaluated with kaolin/water mixtures at the Cold Test Facility in August 2009, as reported in RPP-RPT-42504. The test evaluated potential issues with the setup and data logging for resistance measurements and the associated report documents some of the findings from utilizing the software system.

5.3 DATA COLLECTION WITH HANDHELD SHEAR-VANE

Data collection will be conducted using a Humboldt H-4227 vane inspection kit, which is shown in Figure 5-6 below. The largest vane available, measuring 50.8 x 101.6 mm, should be used when conducting handheld measurements due to the low shear strength of the kaolin/water simulant. This vane provides a range of 0 to 8,125 Pa and the largest shear strength expected to be encountered is less than 2,000 Pa. The unit comes with 0.5 m attachment rods to extend into the tank. To avoid surface affects and to align with the data collected with the full flow penetrometer, the first measurement should be taken at around the 50 inch level (as measured from ground). Data can be collected every 12 inches with extension rods attached where necessary for a total of 4 measurements per tank opening and 8 total measurements per tank. Thus the final measurement for each opening will be at about the 14 inch level, as shown in Figure 5-2.

Figure 5-6. Humboldt Handheld Shear-Vane Device.

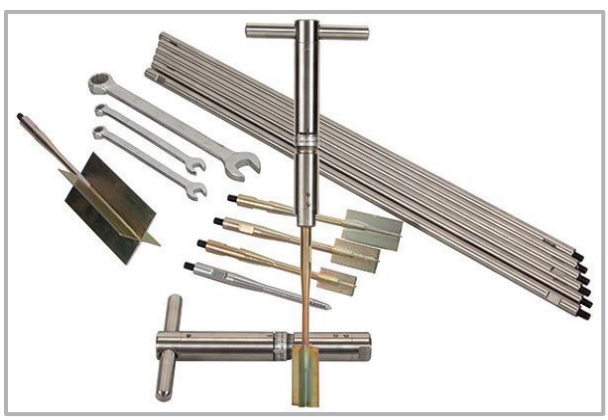

Operation of the device should follow the working instructions in the product manual, included in Appendix B.

5.4 DATA ANALYSIS

The data collected from the full-flow penetrometer tests will provide the penetrating force of the ball attachment while the data collected from the handheld shear-vane will provide simulant shear strength over the same range of tank depths. Using the shear strength and penetration resistance data, the *N* factor can be calculated for each of the three different kaolin/water mixtures using Equation 1-4 outlined in Section 1.3. The *N* factors should be reasonably close to one another as this is an empirical value inherent to the device and relatively independent of in situ conditions over narrow shear strength ranges. Once determined, the *N* factor can be used for in-tank measurements to determine the shear strength of sludge waste from resistance data without the use of a secondary device.

6.0 REFERENCES

DeJong, J. T., Yafrate, N. J., and DeGroot, D. J., 2010, "Evaluation of Undrained Shear Strength Using Full-Flow Penetrometers," *Journal of Geotechnical and Geoenvironmental Engineering*.

DeJong, J. T., et. al., 2010, "Recommended Practice for Full-Flow Penetrometer Testing and Analysis," *Journal of Geotechnical and Geoenvironmental Engineering*, Vol. 33, No. 2.

MSDS 064970, 2006, *Material Safety Data Sheet EPK Kaolin*, US OSHA Hazard Communication Standard CFR 1910.1200, Revision 2, Date Issued: 03/01/2006.

Operating Instructions HYSON 200 kN on Skid with Power Pack, Issue Number: 1, Date of Issue: 01/30/2012, Order Number 54984, A.P. van den Berg Machinefabriek, Heerenveen, Netherlands.

PNNL-13337, 2001, *Preventing Buoyant Displacement Gas Release Events in Hanford Double-Shell Waste Tanks,* Pacific Northwest National Laboratory, Richland, Washington.

RPP-7771, 2001, *Flammable Gas Safety Issue Resolution*, Rev. 0A, CH2M HILL Hanford Group, Inc., Richland, Washington.

RPP-10006, 2012, *Methodology and Calculations for the Assignment of Waste Groups for the Large Underground Waste Storage Tanks at the Hanford Site*, Rev. 10A, Washington River Protection Solutions, LLC, Richland, Washington.

RPP-PLAN-44573, 2011, *Project Plan for Implementing a New Buoyant Displacement Gas Release Event Safety Basis*, Rev. 0, Washington River Protection Solutions, LLC, Richland, Washington.

RPP-RPT-42504, 2009, *Shear Strength Measuring Equipment Evaluation at the Cold Test Facility*, Rev. 0, Washington River Protection Solutions, LLC, Richland, Washington.

RPP-RPT-49609, 2011, *Process Hazard Analysis for the 200 kN Cone Penetrometer Waste Measurement Device*, Rev. 0, Washington River Protection Solutions, LLC, Richland, Washington.

van Kessel, T., and W.G.M van Kesteren, 2002, "Gas Production and Transport in Artificial Sludge Depots," *Waste Management*, vol. 22, p. 19-28, Elsevier Science Ltd.

WRPS-1105266, 2011, *Buoyant Displacement Gas Release Event (BDGRE) Expert Panel Workshop #3*, Meeting Minutes, Washington River Protection Solutions, LLC, Richland, Washington.

Yafrate, N. J., DeJong, J. T., and DeGroot, D. J., 2007, "The Role of Full-Flow Penetrometer Area Ratio on Penetration Resistance and Shear Strength Estimates", Presentation at Society for Underwater Technology 6th International Offshore Site Investigation and Geotechnics Conference: Confronting New Challeneges and Sharing Knowledge, London, United Kingdom.

APPENDIX A -

PREPARATION OF TEST MIXTURE

A.1 MODELED KAOLIN/WATER SHEAR STRENGTH DATA

A number of Pacific Northwest National Laboratory (PNNL) reports have provided measured shear strengths for kaolin/water mixtures. This data was utilized to create a plot with exponential fits to each dataset, as shown in Figure A-1. Important aspects of the data are shown in Table A-1, where shear strength is denoted s_u and weight percent kaolin is shown as w_k. The most recent data is adopted from PNNL-19094, shown in orange on the plot, and this model predicts the highest shear strengths of the datasets used. It serves as an upper bound for predictive shear strengths, but it should be noted that the data does not include kaolin mixtures above 57 weight percent and therefore the fitted model may not truly provide accurate expected shear strengths above that value. In order to obtain a more reasonable prediction over a wide range of weight percent mixtures, all data points were combined in a single set and an exponential curve was fit to the data, as shown in black on the plot. This dataset serves as an 'average' predicted shear strength given a kaolin weight percent mixture. This data is used, in addition to Figure A-2, to determine the range of mixtures required for testing.

Table A-1. Summary of Available Shear Strength versus Weight Percent Kaolin Data.

Reference	Curve Model	Data Points	Min. Wt% Kaolin	Max. Wt% Kaolin
PNL-10464	$s_u = 0.0243\exp[0.1786 * w_k]$	5	58.3	67.2
PNL-10582	$s_u = 0.0196\exp[0.1800 * w_k]$	7	54.2	66.4
PNNL-13748	$s_u = 0.0119\exp[0.1921 * w_k]$	7	30	60
PNNL-14333	$s_u = 0.0297\exp[0.1715 * w_k]$	20	35	70
PNNL-19094	$s_u = 0.0005\exp[0.2497 * w_k]$	9	50	57
Combined Total	$s_u = 0.0199\exp[0.1799 * w_k]$	48	30	70

The testing described in this document will use three kaolin/water mixtures. The three mixtures will include 55% kaolin/45% water, 58% kaolin/42% water, and 61% kaolin/39% water, by weight percent. Using the Combined Total model to determine 'average' expected shear strength, the three kaolin/water mixtures chosen for testing will represent shear strengths of approximately 400 Pa, 700 Pa, and 1,200 Pa, respectively. Using the PNNL-19094 model to determine 'upper bound' expected shear strength, the three mixtures will represent approximately 500 Pa, 1,000 Pa, and 2,100 Pa, respectively.

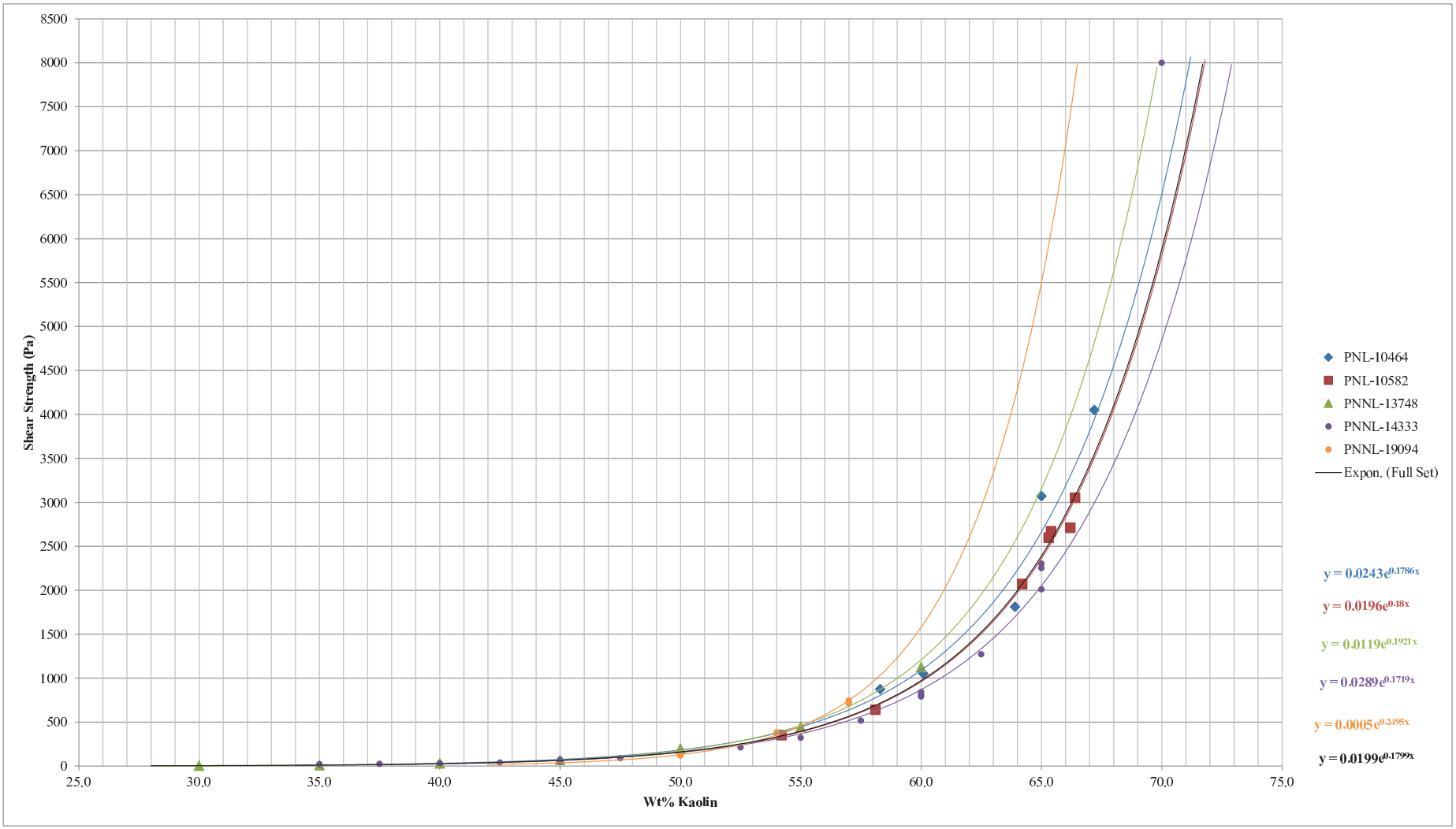

Figure A-1. Plot of Available Wt% Kaolin versus Shear Strength Data.

A.2 DST SLUDGE WASTE SHEAR STRENGTH DATA

The Tank Waste Inventory Network System (TWINS) has limited data available on the shear strength of DST sludge wastes. The data that *is* available was measured in a laboratory using core sludge waste samples, not using in situ methods. Only 76 sludge waste data points were available across 7 DSTs. It is difficult to gauge the accuracy of these measurements in comparison to the in situ conditions and it should be noted that none of the tank data can be contributed to tanks AN-101 and AN-106, the two tanks in the field that are to have full-flow penetrometer measurements. The analysis for these samples was also completed at least ten years ago and may not serve to accurately predict in situ sludge shear strength in tanks AN-101 and AN-106, but it represents the limited shear strength data available.

The available data was used to create a box and whisker plot, shown as Figure A-2, to show the measured shear strength distribution as a reference to future testing. A summary of the data is shown below in Table A-2. The figure serves to illustrate the extreme variability in the available data. The blue X's on the graph show outliers, using the standard definition of points beyond the third quartile (Q3) multiplied by 1.5 for outlying high values and the first quartile (Q1) divided by 1.5 for outlying low values. The red X's show extreme outliers, using the definition of points beyond Q3 multiplied by 3 for outlying high values and Q1 divided by 3 for outlying low values.

Table A-2. Sludge Waste Shear Strength Measurements Data Analysis.

	AW-103	AY-101	AY-102	AZ-101	AZ-102	SY-101	SY-102	Total
Count	10	9	27	4	6	17	3	76
Mean	789.6	2140.0	1140.0	1607.3	1967.8	1181.8	228.0	1275.6
SD	517.7	2119.0	1856.7	1867.6	3061.6	1429.6	-	1767.7
Min	279.0	45.0	57.0	210.0	345.0	50.0	101.0	45.0
Q1	472.3	420.0	385.0	247.5	595.8	270.0	-	320.5
Median	554.0	1442.0	507.0	1014.5	801.0	530.0	-	541.0
Q3	926.5	2720.0	915.0	2374.3	1054.3	1500.0	-	1288.3
Max	1769.0	6745.0	8096.0	4190.0	8194.0	4750.0	304.0	8194.0
Whisker-	146.3	18.0	7.0	37.5	46.8	60.0	-	70.5
Whisker+	4.5	975.0	336.0	0.0	62.8	600.0	-	480.8

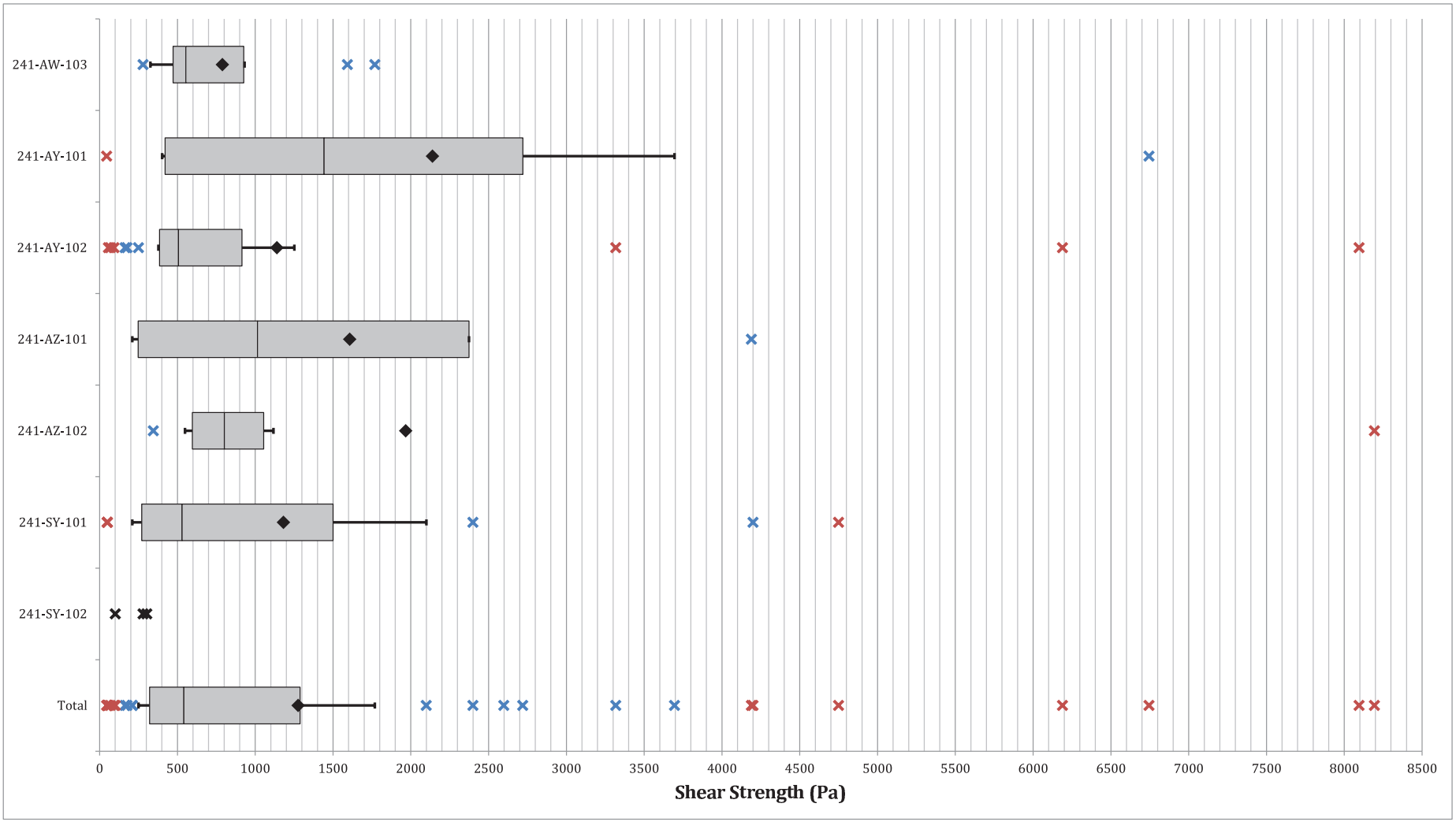

Figure A-2. Plot of Available Sludge Waste Shear Strength Measurements.

A.3 APPENDIX A REFERENCES

PNNL-19094, 2010, *Shear Strength Correlations for Kaolin/Water Slurries: A Comparison of Recent Measurements with Historical Data,* Pacific Northwest National Laboratory, Richland, Washington.

Tank Waste Inventory System (TWINS), Queried 07/02/2012, [Sample Analysis, providing shear strength data for all tanks], https://twins.labworks.org/twinsdata/Forms/About.aspx.

APPENDIX B -

HUMBOLDT HANDHELD VANE PRODUCT MANUAL

B.1 VANE INSPECTION KIT - H-4227 PRODUCT MANUAL

08.09

product manual

H-4227

Introduction

The inspection vane is used to measure in-situ undrained shear strength in clays. It is primarily intended for use in trenches and excavations at depths up to 3m. This can be extended with additional optional extensions.

The range of the instrument is from 0 to 260kPa when three different size vanes are used. Accuracy should be within 10% of the reading.

Description

The measuring part of the instrument is a spiral-spring, (max. torque transmitted 30 kgcm). When the handle is turned, the spring deforms and the upper part and the lower part of the instrument get a mutual angular displacement. The size of this displacement depends on the torque required to turn the vane. By means of a graduated scale shear strength of the clay is obtained.

The lower and upper halves of the instrument are connected by means of threads. The scale is also supplied with threads, and follows the upper part of the instrument by means of two lugs. The O-point is indicated by a line on the upper part. When torque is applied, the scale-ring follows the upper part of the instrument, and when failure in the clay is obtained, the scale-ring will remain in its position due to the friction in the threads.

Three sizes of four-bladed vanes are supplied:

20 x 40mm (standard): Reading is direct-Range is 0 to 130kPa (1.3 TSF)

16 x 32mm (extra vane): Multiply reading by 2-Range is 0 to 260kPa (2.6 TSF)

25.4 x 50.8 (extra vane): Multiply reading by O.S-Range is 0 to 65kPa (0.65 TSF)

A fourth vane, measuring 50.8 x 101.6mm, is available and can be ordered as H-4227.2. When using this vane, multiply reading by 0.0625. Range is 0 to 8.125kPa (0.08TSF).

• Note that each mark on graduated scale equals 1kPa. Therefore, the mark 1 actually represents 10kPa when using the standard (20 x 40mm) vane. The maximum possible reading is 130kPa using the standard vane and 260kPa when using the smallest (16 x 32mm) vane.

The "area ratio" of the vanes are 14, 16.5 and 24% (ratio of cross sectional area of vane to the area to be sheared).

The vane blades are soldered to a vane-shaft, which can be extended by one or more 0.5m long rods. The connection between the shaft-rods and the instrument is made by threads. To make the connection as straight as possible, the rods have to be screwed tight together and with threads free from dirt.

The maximum shear strength that can be measured with the inspection vane is 260kPa. In clays with this shear strength, a force of about 40 to 50 kilos is required to press the vane down into the clay. The vane-shaft is designed to take this -force, but if extension rods are used, precautions against buckling are suggested.

Working Instructions

General Procedure

1. Connect required vane and extension rods to the inspection vane instrumen
   WHILE SCREWING VANE OR RODS TO INSTRUMENT, HOLD ONTO LOWER PART of the instrument.
2. Push vane into the ground to the required position.
   MAKE NO TWISTING MOTION TO VANE DURING PENETRATION.
3. Make sure that the graduated scale is set to 0 position.
4. Turn handle clockwise.
   TURN AS SLOWLY AS POSSIBLE WITH CONSTANT SPEED.
5. When the lower part moves at same rate as upper part (4) around or even falls back, failure has occurred and maximum shear strength has been attained in the clay at the vane.
6. Holding handle firmly, allow it to return to zero-position.
   DO NOT ALLOW THE HANDLE TO SPRING BACK as damage to mechanism could occur.
7. Note the reading on the graduated scale.
   DO NOT TOUCH OR IN ANY WAY DISTURB THE POSITION OF THE GRADUATED RING UNTIL THE READING IS TAKEN.
8. Record the reading together with position of hole and depth.
9. Turn the graduated scale counter-clockwise back to 0 position.
10. To determine the remolded shear strength, the following procedure is used: Turn the vane quickly at least 25 revolutions. Zero the scale and take at least two measurements by turning the instrument as slowly as possible. The minimum value is considered the correct one.
11. Push the vane down to next position. If necessary add on another extension rod.
12. Repeat the above measurement procedure (3-10).
13. When the last reading is taken pull the vane up. If the clay is comparatively soft, this can be done by hand, gripping the handle. In harder clays, some mechanical device might be necessary. It is then advisable to remove the instrument and pull the rods directly.

Special Procedure

When measuring the shear strength at greater depths, friction between the clay and the extension rods can be appreciable and must be taken into consideration.

To measure this friction, extension rods and a vane-shaft without vane (dummy) are pushed into the ground to the depths required for shear force measurements. Friction is then measured in the same way as when using vanes (above 3-9). The friction-value obtained is deducted from the measured shear strength to determine the actual shear strength.

To penetrate through firm layers, a preboring using a rod with the same diameter as the vane may be helpful.

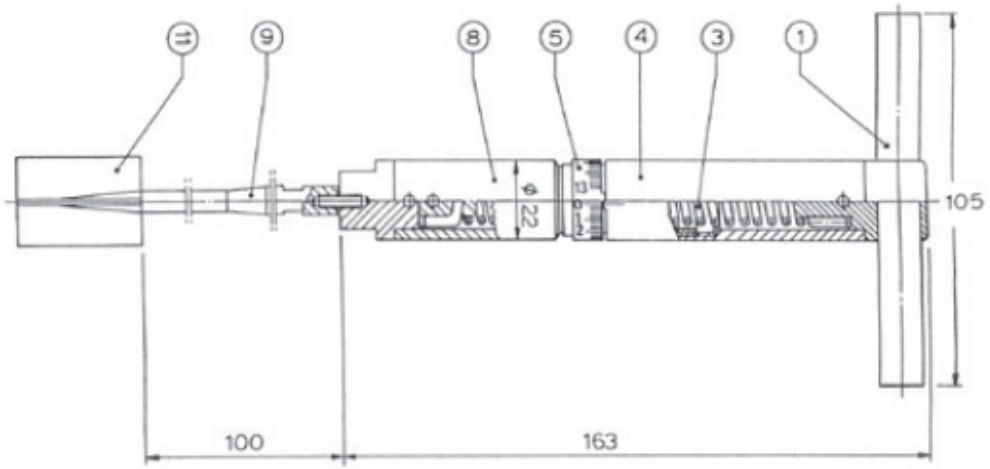

Warranty

Humboldt Mfg. Co. warrants its products to be free from defects in material or workmanship. The exclusive remedy for this warranty is Humboldt Mfg. Co., factory replacement of any part or parts of such product, for the warranty of this product please refer to Humboldt Mfg. Co. catalog on Terms and Conditions of Sale. The purchaser is responsible for the transportation charges. Humboldt Mfg. Co. shall not be responsible under this warranty if the goods have been improperly maintained, installed, operated or the goods have been altered or modified so as to adversely affect the operation, use performance or durability or so as to change their intended use. The Humboldt Mfg. Co. liability under the warranty contained in this clause is limited to the repair or replacement of defective goods and making good, defective workmanship.

Humboldt Mfg. Co.
3801 North 25th Avenue
Schiller Park, Illinois 60176 U.S.A.

U.S.A. Toll Free: 1.800.544.7220
Voice: 1.708.456.6300
Fax: 1.708.456.0137
Email: hmc@humboldtmfg.com

Testing Equipment for Construction Materials

HUMBOLDT

www.humboldtmfg.com