ENGINEERING DATA TRANSMITTAL

1. EDT 822798

1A. Page 1 of 1

2. To: (Receiving Organization) Distribution	3. From: (Originating Organization) C-Farm Engineering	4. Related EDT No.: N/A 5. Structure Location: 241-C-Farm
6. Proj./Prog./Dept./Div.: 241-C-Farm Engineering	7. Responsible Engineer/Design Agent: R.E. Bauer	8. System Designator: N/A 9. Building No.: N/A
10. Originator Remarks: Issued for Release		11. Equipment ID No. (EIN): N/A 12. Permit/Permit Application No.: N/A
13. USQ No.: TF-08-0604-S/R0 ☐ N/A Date: 4/9/08 14. PrHA Screening No.: ☐ N/A PRHA-0001, R0	13(A). TBDs or HOLDs In the Data Transmitted? ☐ Yes ☒ No 13(B). Project Number or Identifier: 241-C-Farm	15. Purchase Order No.: N/A 16. Required Response Date: N/A

17. DATA TRANSMITTED

(A) Item No.	(B) Document/Drawing No.	(C) Sheet No.	(D) Rev. No.	(E) Title or Description of Data Transmitted	(F) Hard-copy or PDF	(G) Approval Desig-nator	(H) Reason for Trans-mittal	(I) Origi-nator Dispo-sition	(J) Receiv-er Dispo-sition
1	RPP-SPEC-37361	All	0	Specification for Fabrication, Assembly,	H	N/A	1	1	
				Inspection, Testing and Shipment of Vacuum					
				Relief and Control Device					

18. IMPACTED DOCUMENTS – NON ENGINEERING		19. IMPACTED DOCUMENTS – ENGINEERING	
Type of Document	Document Number	Type of Document	Document Number
N/A	N/A	N/A	N/A

20. KEY

Approval Designator (G)	Reason for Transmittal (H)	Disposition (I)
See TFC-ENG-DESIGN-C-25	1. Approval 2. Review 3. Distribution	1. Approved 2. Approved w/comment 3. Reviewed no comment 4. Reviewed w/comment 5. Disapproved

21. SIGNATURE/DISTRIBUTION

(H) Reason	(I) Disp.	(J) Name	(K) Signature	(L) Date	(M) MSIN
1	1	Originator M.E. McKinney	M.M.McKinney	4/8/08	S7-67
1	1	Resp. Engr. R.E. Bauer	[illegible]	4/9/08	A3-05
1	1	Resp. Mgr. W.T. Thompson	[illegible]	4/9/08	S7-66
		QA			
		IH&S Engr.			
		Env. Engr.			
1	1	T.R. Farris	[illegible]	4-8-08.	S7-24
3		D.R. Lucas			S7-68

(H) Reason	(I) Disp.	(J) Name	(K) Signature	(L) Date	(M) MSIN

22. DOE APPROVAL (if required)

Ctrl. No.

23. Release Date/Station/ID

APR 0 9 2008 (2) [illegible]

BD-7400-172.2 (REV 2)

Specification for Fabrication, Assembly, Inspection, Testing and Shipment of Vacuum Relief and Control Device

M.E. McKinney
CH2M HILL
Richland, WA 99352
U.S. Department of Energy Contract DE-AC27-99RL14047

EDT/ECN:	EDT-822798	UC:	N/A
Cost Center:	N/A	Charge Code:	N/A
B&R Code:	N/A	Total Pages:	~~30~~ 31 MM 4/9/08

Key Words: Vacuum Relief, Control Device, Tank Ventilation, Portable Exhauster, C-Farm

Abstract: This specification provides the requirements for fabication, assembly, inspection, testing and shipment of the Vacuum Relief and Control Device.

TRADEMARK DISCLAIMER. Reference herein to any specific commercial product, process, or service by trade name, trademark, manufacturer, or otherwise, does not necessarily constitute or imply its endorsement, recommendation, or favoring by the United States Government or any agency thereof or its contractors or subcontractors.

Printed in the United States of America. To obtain copies of this document, contact: Document Control Services, P.O. Box 950, Mailstop H6-08, Richland WA 99352, Phone (509) 372-2420; Fax (509) 376-4989.

Release Approval — Date 4/9/2008

DATE: HANFORD RELEASE
STA: 4 ID: 2
APR 09 2008
Release Stamp

Approved For Public Release

SPECIFICATION FOR FABRICATION, ASSEMBLY, INSPECTION, TESTING AND SHIPMENT OF THE VACUUM RELIEF AND CONTROL DEVICE

April 7, 2008

Prepared By

M.E. McKinney

C-Farm Engineering
CH2M Hill

TABLE OF CONTENTS

1.0 SCOPE

2.0 APPLICABLE DOCUMENTS

3.0 QUALITY ASSURANCE

4.0 FACTORY ACCEPTANCE TEST REQUIREMENTS

- 4.1 TESTING PURPOSE / SCOPE
- 4.2 TEST EQUIPMENT FOR PERFORMANCE TESTING
- 4.3 TEST EQUIPMENT FOR LEAK TESTING
- 4.4 PERFORMANCE TEST INSTRUCTIONS
- 4.5 LEAK TESTING, PRESSURE DECAY METHOD

5.0 DOCUMENT SUBMITTALS

6.0 PREPARING FOR DELIVERY

- 5.1 PRESERVATION AND PACKAGING
- 5.2 SHIPPING AND HANDLING
- 5.2 MARKING

ATTACHMENT 1 – FABRICATION AND TESTING PROCEDURE (Example)

1.0 SCOPE

This specification provides the requirements for fabrication, assembly, inspection, testing and shipment of the Tank Vacuum Relief and Control Device. The Tank Vacuum Relief and Control Device shall be fabricated and assembled in accordance with drawing H-14-106608, including any applicable Engineering Change Notices (ECN).

2.0 APPLICABLE DOCUMENTS

National codes and standards listed in General Notes on drawing H-14-106608 constitutes a part of this specification. The current version of the documents shall be used unless otherwise specified. In the event of a conflict between the documents referenced herein and the requirements of this specification, the requirements of this specification shall take precedence.

3.0 QUALITY ASSURANCE

This equipment has been classified as General Service, Enhanced Quality (Quality Level 3).

4.0 FACTORY INSPECTION AND ACCEPTANCE TEST REQUIREMENTS

The Tank Vacuum Relief and Control Device shall be inspected and tested in accordance with drawing H-14-106608, General Notes and sections listed below.

The Buyer reserves the right to witness all tests and shall be given a minimum of 5 working days written notice prior to each test date.

Prior to the performance of these tests, the Seller shall submit a procedure for testing to the Buyer for review and approval (not required for weld inspection and examination). Test information recorded or calculated shall be documented and submitted to the Buyer. See "Attachment 1" for example.

4.1 TESTING PURPOSE / SCOPE

This test verifies key performance capabilities of the vacuum relief/controller units (design drawing H-14-106608). Two separate units may be fabricated, one with a differential pressure setting range up to 4 IN WG (for installation on a waste tank), the other one settable up to 20 IN WG (for installation in ventilation ductwork). The scope of this test includes the following items for each unit.

1. Verify proper actuation and clearance between the moving component and housing by cycling the vacuum controller repeatedly through its physical range of operation at each setting.
2. Verify the range of possible differential pressure settings. The basic requirement for the tank vacuum controller is to have a differential pressure adjustment range

of 0.5 to 4 inches water gage, adjustable in approximately 0.5 inch water gage increments (Basis: Technical basis document, RPP-22295, Rev 0). The basic requirement for the ductwork vacuum controller is that it be able to actuate at vacuum levels up to 20 inches water gage (it is designed to be settable from 5 to 20 inches water gage, adjustable in 2.5 inch water gage increments).

3. At each setting (or selected settings), obtain differential pressure data at flow rates from the opening point to 3000 cubic feet per minute (Basis: Assumed capacity of exhauster from technical basis document, RPP-22295, Rev 0).
4. Perform leak test of unit using AG-1 pressure decay method.

Data sheets shall be created to clearly identify and record all necessary test data (such as but not limited to, test engineer, test date, equipment identification information, measurement data, calculations as applicable). Consult the customer engineering representative for any questions concerning these tests.

4.2 TEST EQUIPMENT FOR PERFORMANCE TESTING

The following equipment is needed for performance testing of the vacuum controllers.

- Fan or blower capable of 3000 cubic feet per minute (cfm) at 25 inches water gage (IN WG).
- Damper or butterfly valve to adjust fan flow.
- Calibrated air flow rate measuring equipment (up to 3000 cfm, accuracy +/- 5%), with capability to adjust for temperature and relative humidity and provide flow rate in standard cubic feet per minute (scfm). Air flow measuring equipment shall be located and operated per the manufacturer's instructions (e.g., relative to upstream or downstream flow disturbances).
- Calibrated differential pressure measuring equipment (minimum range of 0-30 IN WG, accuracy of +/- 0.1 IN WG).
- Test fixture to hold vacuum controller in a vertical position and allow horizontal connection to ductwork (see figure 1).
- 12 inch diameter ductwork, sufficient straight length to obtain good air flow rate readings (per manufacturer's recommendations).
- Miscellaneous fittings to connect fan, test fixture, vacuum controller, instruments etc.

PERFORMANCE TEST SET-UP (VACUUM CONTROLLER)

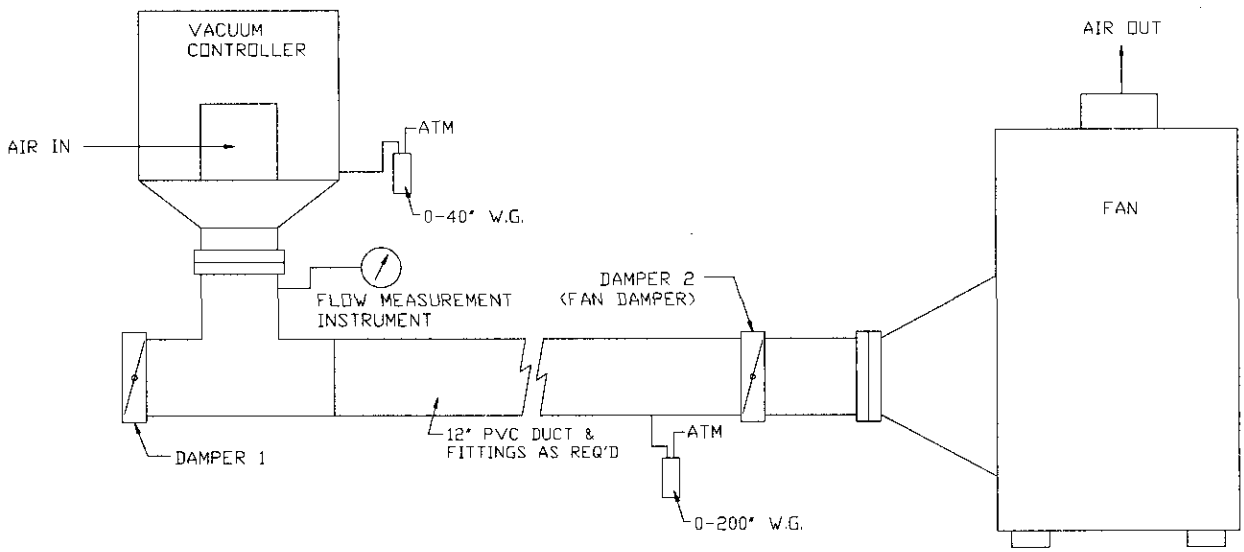

FIGURE 1

4.3 TEST EQUIPMENT FOR LEAK TESTING

The following equipment is needed to perform leak (pressure decay) testing of the vacuum controllers.

- Calibrated differential pressure measuring equipment with range of 0-30 IN WG, and accuracy of +/- 0.1 IN WG.
- Calibrated barometer, accurate to +/- 0.01 IN Hg or use weather station data.
- Calibrated temperature indicator, accurate to +/- 0.5 degrees F. Approximate range of 0 to 150 degrees F.
- Clock or timer accurate to +/- 1.0 second over the anticipated test duration (approximately 15 minutes). A standard stopwatch is acceptable.
- Pressure source capable of 1 pound per square inch (psi), with appropriate isolation valve(s) and pressure relief mechanism.
- Miscellaneous fittings to connect instruments and equipment to test assembly.
- Blanks, gaskets and bolts, and/or other materials necessary to seal temporary connections and test penetrations in the assembly.
- Bubble solution for detecting air leaks.

Leak Test Set-Up

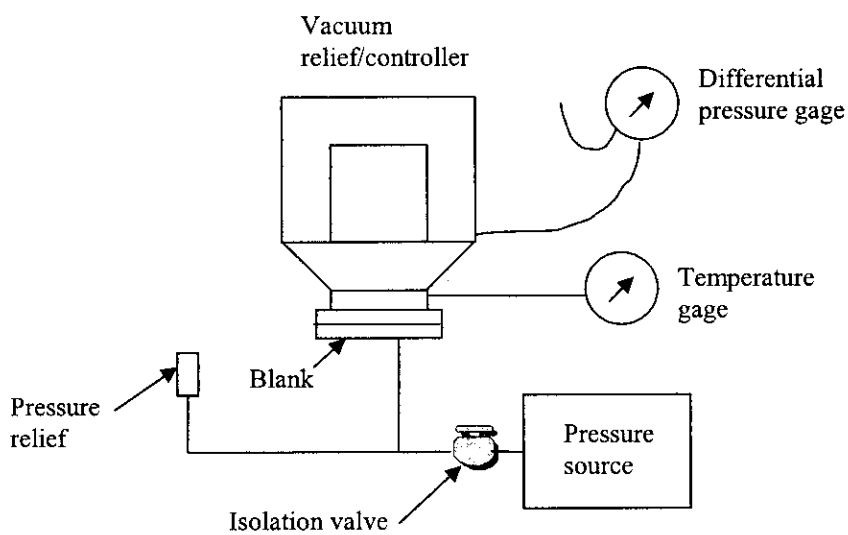

4.4 PERFORMANCE TEST INSTRUCTIONS

The basic test steps are outlined below. The test should be performed in the order specified. A test data sheet shall be created to record all pertinent test information.

Start-Up

- Set up equipment per sketch and test engineer's instructions.
- Record instrument and equipment data (e.g., manufacturer, model, calibration expiration dates for measurement devices; vacuum controller identification number).
- Record other pertinent test information.
- Make sure all weights are removed from the vacuum controller's moving component and are hung on the weight storage hooks.
- Make sure fan damper is closed.
- Turn on fan.

Cycling and Observations

- Slowly open and close "damper 1" 25 times to cause vacuum controller to cycle. Note: DO NOT rapidly open and close the damper such as to cause the vacuum controller to slam up and down – this may damage the vacuum controller. While cycling the damper, observe and record how the vacuum controller is operating (e.g., does it move smoothly and operate quietly?, is there vibration/noise?, does it stick in spots?).
- If the vacuum controller sticks in any way or otherwise does not appear/sound to be operating correctly (it should move relatively smoothly and quietly), then the clearances between the housing and moving component need to be checked and adjusted if necessary. Consult customer engineering representative before performing any adjustments or alterations.

Performance Testing

- Record number of weights hung on moving component of vacuum controller and theoretical setting (based on sum of stamped pressures on float and weights).
- Close inlet screen on vacuum controller.
- Adjust damper so that the controller just barely starts to rise (or is on the verge of opening).
- Measure and record flow rate.
- Measure and record vacuum controller differential pressure.
- Record approximate height of opening/gap at top of controller.
- Observe and record how the vacuum controller is operating (e.g., can a slight rocking motion be observed in the moving component?, is there any vibration or noise?).
- Repeat the above 4 steps at 500 cfm increments up to 3000 cfm. Other data points between any of these increments may also be obtained at the discretion of the test engineer.
- Close damper.

- Adjust the vacuum controller setting to the next 0.5 IN WG increment for the 4 IN WG unit (or the next 5 IN WG increment for the 20 IN WG unit) by hanging weight(s). Repeat all of the above Cycling and Performance testing steps. Repeat this step at each incremental setting up to about 4 IN WG for the 4 IN WG unit (or 20 IN WG for the 20 IN WG unit).
- Obtain data for maximum flow rate(s) possible through vacuum controller (given fan used) at various differential pressure settings as specified by customer engineering representative.

4.5 LEAK TESTING, PRESSURE DECAY METHOD

The basic steps of the leak test include the following. Steps that are not applicable to the inspection/testing may be omitted. The test and test results shall be documented. A sample data/calculation sheet is provided.

Pressure Decay Leak Test of Vacuum Relief/Controller

- Set up equipment per sketch and test engineer's instructions.
- Isolate the end (bottom) of vacuum controller using a temporary blank. Note that if sufficient test ports are not available in the vacuum controller, use blanks that have available test ports. See important NOTE below also.
- Install and seal temperature measuring instrument into one of the ports in the vacuum controller. Record equipment information.
- Install and seal pressure measuring instrument into one of the ports in the vacuum controller. Record equipment information.
- Install pressurization source (with isolation valve and pressure relief mechanism) at one of the ports in the vacuum controller.
- Pressurize the vacuum controller to the pressure indicated by the customer. As necessary, locate (using a suitable bubble solution, audible methods, or other) and seal all leaks as best as possible.
- Maintain constant pressure until temperature remains constant within +/- 0.5 degrees F for a minimum of 10 minutes.
- Isolate the air supply from the vacuum controller while starting the clock. Record initial pressure and temperature.
- Record pressure and temperature readings a minimum of once a minute until pressure decays to 80% of starting pressure or for a maximum of 15 minutes, which ever comes first.
- Record final time, pressure, and temperature.
- Perform the leakage rate calculations as outlined on the sample data sheet. If $/Q/ < L$ then record "PASS." Otherwise, record "RETEST."
- If a retest is needed, determine the leak path(s) using the bubble leak location and/or audible leak location method. Repair leaks and perform the above steps again using new data sheets.
- Restore equipment to its pre-test configuration. Remove test equipment and temporary blanks and re-install test port plugs.

NOTE: This pressure decay test is also used to effectively pre-test the joints that are not testable after installation (e.g., in this case, all seals in the vacuum controller housing since there will be no valves between the vacuum controller and the tank). Therefore, the gaskets installed for testing shall be the same size/dimensions and material as that specified in the installation design. The bolts used for the testing shall be the same size as that specified in the installation design, and installed in the same manner (if manner not specified, then per standard industrial practice). Any temporary blanks used shall have the same basic dimensions (e.g. hole size and pattern) as the vacuum controller flange. Tape or other sealants shall not be used to help seal any of the joints or the temporary blanks (except for instrument and test equipment connections).

SAMPLE DATA/CALCULATION SHEET FOR PRESSURE DECAY TEST (VACUUM CONTROLLERS)
Test lead or responsible engineer (print name and sign): Date: Component title, drawing and assembly number: Component identification (serial) number: Retest number: Post-fabrication or post-installation test? Results (Pass or Fail):
Pressure Decay Test Data/Comments
Instrument Data Manufacturer: Model: Identification number (serial or other): Calibration expiration date:
Instrument Data Manufacturer: Model: Identification number (serial or other): Calibration expiration date:
Time: Initial Pressure (IN WG): Initial Temperature (deg F):
Time: Pressure (IN WG): Temperature (deg F):
Final Time: Final Pressure (IN WG): Final Temperature (deg F):
Test Parameter/Calculation
(A) Beginning pressure in inches WG =
(B) Beginning pressure in psig (A/27.7) =
(C) Beginning barometric pressure in psi (IN Hg x 0.491) =
(P1) Beginning pressure in psfa (B + C)144 =
(D) Beginning temperature in deg F =
(T1) Beginning temperature in deg R (D + 460) =
(E) Ending pressure in inches WG =
(F) Ending pressure in psig (E/27.7) =
(G) Ending barometric pressure in psi (IN Hg x 0.491) =
(P2) Ending pressure in psfa (F + G)144 =
(H) Ending temperature in deg F =
(T2) Ending temperature in deg R (H + 460) =
(V) Test volume in cubic feet (attach calculation) =
(R) R, gas constant, in ft lb/(lb*deg R) = 53.35
(ΔT) Test Duration in minutes =
(Q) Average total leakage rate in standard cubic feet per minute. A factor of 10% shall be added to (Q) for any tests involving the testing of joints which are not testable after installation (e.g., flange of vacuum controller that is mounted directly to tank riser flange). Q = (P1/T1 - P2/T2)V/(R * ΔT * .075) =
(L) Allowable Leak Rate in standard cubic feet per minute (to be determined by customer) =

5.0 DOCUMENT SUBMITTALS

The Seller shall submit the specified documents (as a minimum) to the Buyer at the address specified in the procurement documentation. Each submittal shall be marked with this specification number, the item number, the purchase order (PO) number, and the Seller's identification number. Three copies of each document shall be submitted, along with a transmittal letter. All of this information shall become the property of the Buyer. See below for deliverable and schedule information.

Summary of Submittals

Item	Title	Copies	Purpose	When required
1	Fabrication and Testing Procedure	3	Approval	Prior to each test
2	Inspection and Examination Documentation	3	Approval	Prior to shipping
3	Certified Test Data and Reports	3	Approval	Prior to shipping
5	Shipping and Handling Plan	3	Approval	Prior to shipping

6.0 PREPARING FOR DELIVERY

6.1 PRESERVATION AND PACKAGING

All items shall be dried and cleaned to protect against rust and corrosion. All items shall be protected from dirt, soil, and moisture and packaged for long term storage in an unprotected exterior environment. All items shall be boxed or crated, as required to eliminate damage during shipping, handling, and storage. Temporary bracing, fixtures, or hardware installed to stabilize furnished items during shipment or handling (excluding packaging materials) shall be tagged or otherwise identified so that it can be removed before installation or operation of the item.

6.2 MARKING

Packages shall be suitably marked on the outside to facilitate identification of the purchase order, the procurement specification, the package contents, and any special handling instructions.

6.3 SHIPPING AND HANDLING

The Seller shall recommend the preferred transportation method and provide protection of the equipment during transit and storage. The Seller shall submit to the Buyer for review and approval a Shipping and Handling Plan that includes preservation, packaging, shipping, storage, and lifting procedures. Buyer approval of the plan is required before packaging and shipment. If a special type of transportation to protect equipment is

required, those devices shall be part of the Seller's package and identified as special equipment.

Attachment 1 (Testing Procedure Example)

1.0 PURPOSE AND SCOPE

The purpose of this document is to describe and document results of performance testing for vacuum relief/controller units for installation on a waste tank (reference design drawing H-14-106608).

The scope of this testing includes:

- Verifying proper actuation and clearance between the moving component and housing by cycling the vacuum controller repeatedly through its range of operation at each setting.
- Verifying the range of possible differential pressure settings. The basic requirement for the tank vacuum controller is to have a differential pressure adjustment range of 0.5 to 4 inches water gage, adjustable in approximately 0.5 inch water gage increments.
- At each setting, obtaining differential pressure data at flow rates from the opening point to 3000 cubic feet per minute.

2.0 RESPONSIBILITIES

The following personnel will be required for the performance of this procedure:

- Project Engineer: The individual assigned direct responsibility for the performance, preparation, and adequacy of the test.

- Test Performer: The individual assigned responsibility for performance of the test.

- Quality Assurance or Quality Control (QA/QC) Representative: The individual assigned responsibility for verifying quality of the testing performed.

- Customer Witness (as required by CH2M Hill): Verify testing and results.

Only personnel designated by the Project Engineer are allowed to direct testing per this procedure, and perform test personnel functions.

Any required changes to this procedure shall be approved by the Customer technical representative and the Project Engineer (or designated representative),

and may be made as "red-line" changes in all official and working copies of the procedure. This procedure may be revised or rewritten at the discretion of the Project Engineer, with appropriate entries in the Test Log to describe the changes made and the reasons for the changes. The steps in this procedure may be performed in any order, except as noted, as specified by the Project Engineer or Test Performer.

3.0 DESCRIPTION OF SYSTEM

The vacuum controller is a mechanical design intended for use in relieving and controlling vacuum in large volume tanks. The vacuum controller acts as a vacuum relief device by opening at a specified set point and acts as a vacuum controller to maintain the specified set point.

4.0 TEST CONDITIONS AND EQUIPMENT REQUIRED

Prior to initiation of testing all personnel shall be briefed on the scope of testing to be conducted.

The following test equipment is required for the performance of the tests in this procedure; equipment may be added or deleted as required during testing:

a. Fan or blower capable of 3000 cubic feet per minute (cfm) at approximately 6 inches water gage (in WG) static pressure (fully open), 9 inches water gage (in WG) static pressure (dead headed).

b. Damper or butterfly valve to adjust fan flow rate.

c. Calibrated air flow rate measuring equipment (up to 3000 cfm, accuracy ± 5%), and provide rate in standard cubic feet per minute (scfm). Air flow measuring equipment shall be located and operated per the manufacturer's instructions (i.e., relative to upstream or downstream flow disturbances).

d. Calibrated differential pressure measuring equipment (minimum range of 0-30 in WG with an accuracy of ± 0.1 in WG).

e. Test fixture to hold vacuum controller in a vertical position and allow horizontal connection to ductwork (see Figure 1).

f. 12 inch diameter ductwork with damper, sufficient straight length to obtain good air flow rate readings (per manufacturer's recommendations).

g. Miscellaneous fittings to connect fan, test fixture, vacuum controller, instruments, etc.

PERFORMANCE TEST SET-UP (VACUUM CONTROLLER)

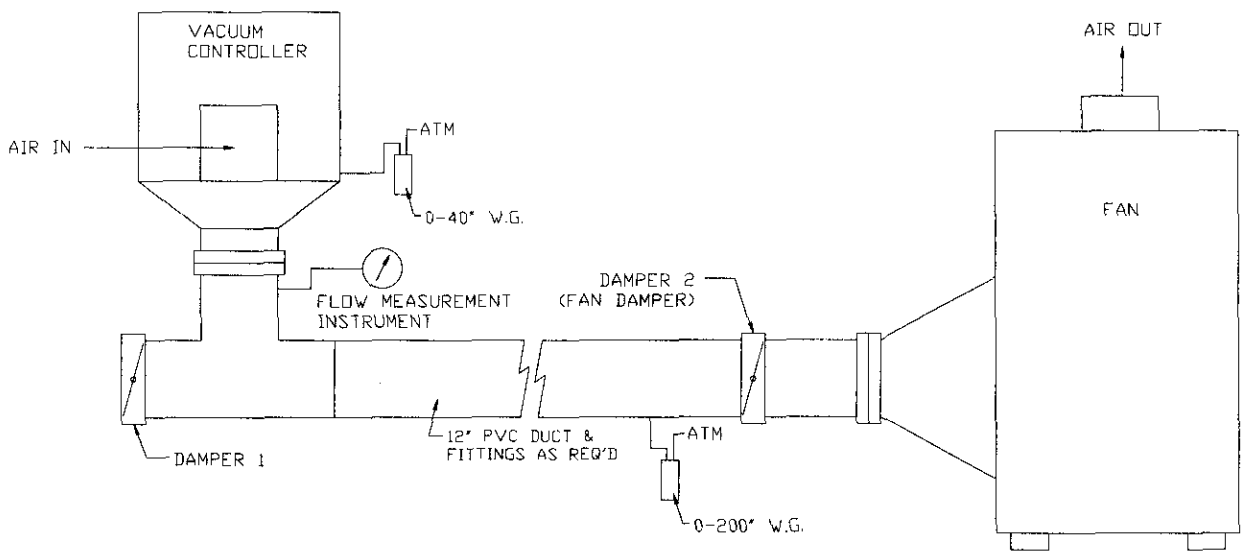

FIGURE 1

5.0 PRE-TEST VERIFICATIONS

Sections of this procedure should be performed in the order presented; however, order may be varied at the discretion of the Project Engineer.

Verify all test equipment is in good working order.

Record calibration data of M&TE on Performance Data Sheet.

6.0 TEST PROCEDURE

Test Start-up

6.1.1 Set-up the test apparatus per Figure 1 with direction provided by the Project Engineer.

6.1.2 Make sure all weights are removed from the vacuum controller's moving component and are placed on the weight storage hooks.

6.1.3 Make sure both dampers are closed.

6.1.4 Turn on fan.

Cycling and Observations

6.1.5 Fully open Damper 1 near the vacuum controller, and throttle Damper 2 near the fan unit, as required.

6.1.6 Slowly open and close Damper 1 twenty five (25) times to cause vacuum controller to cycle (see note below). While cycling the damper(s), observe and record how the Vacuum Controller is operating (i.e., does it move smoothly and operate quietly? Is there noise/scraping? Does it want to stick?)

NOTE: **DO NOT rapidly open and close the dampers such as to cause the vacuum controller to slam up and down – this may damage the vacuum controller. Adjust both dampers as required to prevent this from happening.**

If the vacuum controller sticks in any way or otherwise does not appear/sound to be operating correctly (it should move relatively smoothly and quietly) note this as a deficiency and, if possible, proceed with testing. Any measurements, adjustments and/or alterations will be performed later under Stage Two Testing.

Performance Testing

6.1.7 Record the number of weights hung on the moving component of the Vacuum Controller and the theoretical setting (based on the sum of stamped pressures on float and weights). Start with zero (0) and add one (1) weight with each successive test.

6.1.8 Close the inlet screen on the Vacuum Controller.

6.1.9 Adjust the damper(s) so that the controller just barely starts to rise (or is on the verge of opening).

6.1.10 Measure and record the flow rate (ACFM).

6.1.11 Measure and record the vacuum controller differential pressure (in WG).

6.3.6 Measure and record duct static pressure (in WG) for information only.

6.3.7 Measure and record relative humidity (RH) for information only.

6.3.8 Obtain and record temperature (F) and barometric pressure (Torr) for information only. Use of a local weather station is acceptable for obtaining these items.

6.3.9 Record the approximate height of opening/gap at top of controller.

6.3.10 Observe and record how the Vacuum Controller is operating (i.e., can a slight rocking motion be observed in the moving component? Is there any vibration or noise?).

6.3.11 Repeat steps 6.6.1 through 6.3.10 at 500 cfm increments up to 3000 cfm. Other data points between any of these increments may also be obtained at the discretion of the Project Engineer.

6.3.12 Close damper.

6.3.13 Adjust the Vacuum Controller setting to the next 0.5 in WG increment by hanging weights. Repeat all Cycling and Performance testing steps (6.2 and 6.3).

6.3.14 Repeat step 6.3.13 at each incremental setting up to about 4 in WG.

6.3.15 Obtain data for maximum flow rate possible through the Vacuum Controller (given the fan used) at various differential pressure settings as specified by the customer engineering representative.

7.0 TEST RESULTS

PERFORMANCE TEST DATA SHEET Page ___ of ___ Test Date: _____	
DESCRIPTION	**RECORD DATA**
TEST ITEM	Vacuum Relief Controller Unit ID: _____
Calibrated Airflow Rate Measuring Equipment (accuracy ±5%)	MANUFACTURER: _____ MODEL: _____ S/N: _____ CALIBRATION DUE DATE: _____
Calibrated Differential Pressure Measuring Equipment (accuracy ± 0.1 in WG)	MANUFACTURER: _____ MODEL: _____ S/N: _____ CALIBRATION DUE DATE: _____
Calibrated Differential Pressure Measuring Equipment (accuracy ± 0.1 in WG) for the ductwork	MANUFACTURER: _____ MODEL: _____ S/N: _____ CALIBRATION DUE DATE: _____
Calibrated Relative Humidity Instrumentation (accuracy ±5%)	MANUFACTURER: _____ MODEL: _____ S/N: _____ CALIBRATION DUE DATE: _____ □ Used Weather Station: _____
Calibrated Temperature Measuring Equipment (accuracy ± 0.5 deg. F)	MANUFACTURER: _____ MODEL: _____ S/N: _____ CALIBRATION DUE DATE: _____ □ Used Weather Station: _____
Calibrated Pressure Transducer and Readout	MANUFACTURER: _____ MODEL: _____ S/N: _____ CALIBRATION DUE DATE: _____
CYCLING AND OBSERVATIONS	
Cycle Test with NO (0) weights	25 Cycles Completed □ Notes: _____

PERFORMANCE TEST DATA SHEET Page ___ of ___ Test Date: _____	
Cycle Test with ONE (1) weight	25 Cycles Completed ☐ Notes: _____
Cycle Test with TWO (2) weights	25 Cycles Completed ☐ Notes: _____
Cycle Test with THREE (3) weights	25 Cycles Completed ☐ Notes: _____

PERFORMANCE TEST DATA SHEET Page ___ of ___ Test Date: _____	
Cycle Test with FOUR (4) weights	25 Cycles Completed ☐ Notes: _____
Cycle Test with FIVE (5) weights	25 Cycles Completed ☐ Notes: _____
Cycle Test with SIX (6) weights	25 Cycles Completed ☐ Notes: _____
Cycle Test with SEVEN (7) weights	25 Cycles Completed ☐ Notes: _____

PERFORMANCE TEST DATA SHEET

Page ___ of ___
Test Date: _____

PERFORMANCE TESTING	
NO WEIGHTS. Controller barely starts to rise.	# of Weights: 0 Opening/Gap: _____ DP: _____ in. WG Flow Rate: _____ ACFM ___*___ SCFM Temp: _____F RH: _____% Duct Pressure: _____ in WG OBSERVATIONS: _____TORR_____
NO WEIGHTS. 500 cfm flow through controller.	# of Weights: 0 Opening/Gap: _____ DP: _____ in. WG Flow Rate: _____ ACFM ___*___ SCFM Temp: _____F RH: _____% Duct Pressure: _____ in WG OBSERVATIONS: _____TORR_____
NO WEIGHTS. 1000 cfm flow through controller.	# of Weights: 0 Opening/Gap: _____ DP: _____ in. WG Flow Rate: _____ ACFM ___*___ SCFM Temp: _____F RH: _____% Duct Pressure: _____ in WG OBSERVATIONS: _____TORR_____
NO WEIGHTS. 1500 cfm flow through controller.	# of Weights: 0 Opening/Gap: _____ DP: _____ in. WG Flow Rate: _____ ACFM ___*___ SCFM Temp: _____F RH: _____% Duct Pressure: _____ in WG OBSERVATIONS: _____TORR_____
NO WEIGHTS. 2000 cfm flow through controller.	# of Weights: 0 Opening/Gap: _____ DP: _____ in. WG Flow Rate: _____ ACFM ___*___ SCFM Temp: _____F RH: _____% Duct Pressure: _____ in WG OBSERVATIONS: _____TORR_____
NO WEIGHTS. 2500 cfm flow through controller.	# of Weights: 0 Opening/Gap: _____ DP: _____ in. WG Flow Rate: _____ ACFM ___*___ SCFM Temp: _____F RH: _____% Duct Pressure: _____ in WG OBSERVATIONS: _____TORR_____
NO WEIGHTS. 3000 cfm flow through controller.	# of Weights: 0 Opening/Gap: _____ DP: _____ in. WG Flow Rate: _____ ACFM ___*___ SCFM Temp: _____F RH: _____% Duct Pressure: _____ in WG OBSERVATIONS: _____TORR_____

PERFORMANCE TEST DATA SHEET

Page ___ of ___
Test Date: _____

ONE (1) WEIGHT. Controller barely starts to rise.	# of Weights: 1 Opening/Gap: _____ DP: _____ in. WG Flow Rate: _____ ACFM ___*___ SCFM Temp: _____F RH: _____% Duct Pressure: _____ in WG OBSERVATIONS: _____TORR_____
One (1) WEIGHT. 500 cfm flow through controller.	# of Weights: 1 Opening/Gap: _____ DP: _____ in. WG Flow Rate: _____ ACFM ___*___ SCFM Temp: _____F RH: _____% Duct Pressure: _____ in WG OBSERVATIONS: _____TORR_____
One (1) WEIGHT. 1000 cfm flow through controller.	# of Weights: 1 Opening/Gap: _____ DP: _____ in. WG Flow Rate: _____ ACFM ___*___ SCFM Temp: _____F RH: _____% Duct Pressure: _____ in WG OBSERVATIONS: _____TORR_____
One (1) WEIGHT. 1500 cfm flow through controller.	# of Weights: 1 Opening/Gap: _____ DP: _____ in. WG Flow Rate: _____ ACFM ___*___ SCFM Temp: _____F RH: _____% Duct Pressure: _____ in WG OBSERVATIONS: _____TORR_____
One (1) WEIGHT. 2000 cfm flow through controller.	# of Weights: 1 Opening/Gap: _____ DP: _____ in. WG Flow Rate: _____ ACFM ___*___ SCFM Temp: _____F RH: _____% Duct Pressure: _____ in WG OBSERVATIONS: _____TORR_____
One (1) WEIGHT. 2500 cfm flow through controller.	# of Weights: 1 Opening/Gap: _____ DP: _____ in. WG Flow Rate: _____ ACFM ___*___ SCFM Temp: _____F RH: _____% Duct Pressure: _____ in WG OBSERVATIONS: _____TORR_____
One (1) WEIGHT. 3000 cfm flow through controller.	# of Weights: 1 Opening/Gap: _____ DP: _____ in. WG Flow Rate: _____ ACFM ___*___ SCFM Temp: _____F RH: _____% Duct Pressure: _____ in WG OBSERVATIONS: _____TORR_____

PERFORMANCE TEST DATA SHEET

Page ___ of ___
Test Date: _____

Two (2) WEIGHTS. Controller barely starts to rise.	# of Weights: 2 Opening/Gap: _____ DP: _____ in. WG Flow Rate: _____ ACFM ___*___ SCFM Temp: _____F RH: _____% Duct Pressure: _____ in WG OBSERVATIONS: _____ TORR _____
Two (2) WEIGHTS. 500 cfm flow through controller.	# of Weights: 2 Opening/Gap: _____ DP: _____ in. WG Flow Rate: _____ ACFM ___*___ SCFM Temp: _____F RH: _____% Duct Pressure: _____ in WG OBSERVATIONS: _____ TORR _____
Two (2) WEIGHTS. 1000 cfm flow through controller.	# of Weights: 2 Opening/Gap: _____ DP: _____ in. WG Flow Rate: _____ ACFM ___*___ SCFM Temp: _____F RH: _____% Duct Pressure: _____ in WG OBSERVATIONS: _____ TORR _____
Two (2) WEIGHTS. 1500 cfm flow through controller.	# of Weights: 2 Opening/Gap: _____ DP: _____ in. WG Flow Rate: _____ ACFM ___*___ SCFM Temp: _____F RH: _____% Duct Pressure: _____ in WG OBSERVATIONS: _____ TORR _____
Two (2) WEIGHTS. 2000 cfm flow through controller.	# of Weights: 2 Opening/Gap: _____ DP: _____ in. WG Flow Rate: _____ ACFM ___*___ SCFM Temp: _____F RH: _____% Duct Pressure: _____ in WG OBSERVATIONS: _____ TORR _____
Two (2) WEIGHTS. 2500 cfm flow through controller.	# of Weights: 2 Opening/Gap: _____ DP: _____ in. WG Flow Rate: _____ ACFM ___*___ SCFM Temp: _____F RH: _____% Duct Pressure: _____ in WG OBSERVATIONS: _____ TORR _____
Two (2) WEIGHTS. 3000 cfm flow through controller.	# of Weights: 2 Opening/Gap: _____ DP: _____ in. WG Flow Rate: _____ ACFM ___*___ SCFM Temp: _____F RH: _____% Duct Pressure: _____ in WG OBSERVATIONS: _____ TORR _____

PERFORMANCE TEST DATA SHEET

Page ___ of ___
Test Date: _____

Three (3) WEIGHTS. Controller barely starts to rise.	# of Weights: 3 Opening/Gap: _____ DP: _____ in. WG Flow Rate: _____ ACFM ___*___ SCFM Temp: _____F RH: _____% Duct Pressure: _____ in WG OBSERVATIONS: _____ TORR _____
Three (3) WEIGHTS. 500 cfm flow through controller.	# of Weights: 3 Opening/Gap: _____ DP: _____ in. WG Flow Rate: _____ ACFM ___*___ SCFM Temp: _____F RH: _____% Duct Pressure: _____ in WG OBSERVATIONS: _____ TORR _____
Three (3) WEIGHTS. 1000 cfm flow through controller.	# of Weights: 3 Opening/Gap: _____ DP: _____ in. WG Flow Rate: _____ ACFM ___*___ SCFM Temp: _____F RH: _____% Duct Pressure: _____ in WG OBSERVATIONS: _____ TORR _____
Three (3) WEIGHTS. 1500 cfm flow through controller.	# of Weights: 3 Opening/Gap: _____ DP: _____ in. WG Flow Rate: _____ ACFM ___*___ SCFM Temp: _____F RH: _____% Duct Pressure: _____ in WG OBSERVATIONS: _____ TORR _____
Three (3) WEIGHTS. 2000 cfm flow through controller.	# of Weights: 3 Opening/Gap: _____ DP: _____ in. WG Flow Rate: _____ ACFM ___*___ SCFM Temp: _____F RH: _____% Duct Pressure: _____ in WG OBSERVATIONS: _____ TORR _____
Three (3) WEIGHTS. 2500 cfm flow through controller.	# of Weights: 3 Opening/Gap: _____ DP: _____ in. WG Flow Rate: _____ ACFM ___*___ SCFM Temp: _____F RH: _____% Duct Pressure: _____ in WG OBSERVATIONS: _____ TORR _____
Three (3) WEIGHTS. 3000 cfm flow through controller.	# of Weights: 3 Opening/Gap: _____ DP: _____ in. WG Flow Rate: _____ ACFM ___*___ SCFM Temp: _____F RH: _____% Duct Pressure: _____ in WG OBSERVATIONS: _____ TORR _____

PERFORMANCE TEST DATA SHEET

Page ___ of ___
Test Date: _____

Four (4) WEIGHTS. Controller barely starts to rise.	# of Weights: 4 Opening/Gap: _____ DP: _____ in. WG Flow Rate: _____ ACFM ___*___ SCFM Temp: _____F RH: _____% Duct Pressure: _____ in WG OBSERVATIONS: _____TORR_____
Four (4) WEIGHTS. 500 cfm flow through controller.	# of Weights: 4 Opening/Gap: _____ DP: _____ in. WG Flow Rate: _____ ACFM ___*___ SCFM Temp: _____F RH: _____% Duct Pressure: _____ in WG OBSERVATIONS: _____TORR_____
Four (4) WEIGHTS. 1000 cfm flow through controller.	# of Weights: 4 Opening/Gap: _____ DP: _____ in. WG Flow Rate: _____ ACFM ___*___ SCFM Temp: _____F RH: _____% Duct Pressure: _____ in WG OBSERVATIONS: _____TORR_____
Four (4) WEIGHTS. 1500 cfm flow through controller.	# of Weights: 4 Opening/Gap: _____ DP: _____ in. WG Flow Rate: _____ ACFM ___*___ SCFM Temp: _____F RH: _____% Duct Pressure: _____ in WG OBSERVATIONS: _____TORR_____
Four (4) WEIGHTS. 2000 cfm flow through controller.	# of Weights: 4 Opening/Gap: _____ DP: _____ in. WG Flow Rate: _____ ACFM ___*___ SCFM Temp: _____F RH: _____% Duct Pressure: _____ in WG OBSERVATIONS: _____TORR_____
Four (4) WEIGHTS. 2500 cfm flow through controller.	# of Weights: 4 Opening/Gap: _____ DP: _____ in. WG Flow Rate: _____ ACFM ___*___ SCFM Temp: _____F RH: _____% Duct Pressure: _____ in WG OBSERVATIONS: _____TORR_____
Four (4) WEIGHTS. 3000 cfm flow through controller.	# of Weights: 4 Opening/Gap: _____ DP: _____ in. WG Flow Rate: _____ ACFM ___*___ SCFM Temp: _____F RH: _____% Duct Pressure: _____ in WG OBSERVATIONS: _____TORR_____

PERFORMANCE TEST DATA SHEET Page ___ of ___ Test Date: _____	
Five (5) WEIGHTS. Controller barely starts to rise.	# of Weights: 5 Opening/Gap: _____ DP: _____ in. WG Flow Rate: _____ ACFM ___*___ SCFM Temp: _____F RH: _____% Duct Pressure: _____ in WG OBSERVATIONS: _____TORR_____
Five (5) WEIGHTS. 500 cfm flow through controller.	# of Weights: 5 Opening/Gap: _____ DP: _____ in. WG Flow Rate: _____ ACFM ___*___ SCFM Temp: _____F RH: _____% Duct Pressure: _____ in WG OBSERVATIONS: _____TORR_____
Five (5) WEIGHTS. 1000 cfm flow through controller.	# of Weights: 5 Opening/Gap: _____ DP: _____ in. WG Flow Rate: _____ ACFM ___*___ SCFM Temp: _____F RH: _____% Duct Pressure: _____ in WG OBSERVATIONS: _____TORR_____
Five (5) WEIGHTS. 1500 cfm flow through controller.	# of Weights: 5 Opening/Gap: _____ DP: _____ in. WG Flow Rate: _____ ACFM ___*___ SCFM Temp: _____F RH: _____% Duct Pressure: _____ in WG OBSERVATIONS: _____TORR_____
Five (5) WEIGHTS. 2000 cfm flow through controller.	# of Weights: 5 Opening/Gap: _____ DP: _____ in. WG Flow Rate: _____ ACFM ___*___ SCFM Temp: _____F RH: _____% Duct Pressure: _____ in WG OBSERVATIONS: _____TORR_____
Five (5) WEIGHTS. 2500 cfm flow through controller.	# of Weights: 5 Opening/Gap: _____ DP: _____ in. WG Flow Rate: _____ ACFM ___*___ SCFM Temp: _____F RH: _____% Duct Pressure: _____ in WG OBSERVATIONS: _____TORR_____
Five (5) WEIGHTS. 3000 cfm flow through controller.	# of Weights: 5 Opening/Gap: _____ DP: _____ in. WG Flow Rate: _____ ACFM ___*___ SCFM Temp: _____F RH: _____% Duct Pressure: _____ in WG OBSERVATIONS: _____TORR_____

PERFORMANCE TEST DATA SHEET

Page ___ of ___
Test Date: _____

Six (6) WEIGHTS. Controller barely starts to rise.	# of Weights: 6 Opening/Gap: _____ DP: _____ in. WG Flow Rate: _____ ACFM ___*___ SCFM Temp: _____F RH: _____% Duct Pressure: _____ in WG OBSERVATIONS: _____ TORR _____
Six (6) WEIGHTS. 500 cfm flow through controller.	# of Weights: 6 Opening/Gap: _____ DP: _____ in. WG Flow Rate: _____ ACFM ___*___ SCFM Temp: _____F RH: _____% Duct Pressure: _____ in WG OBSERVATIONS: _____ TORR _____
Six (6) WEIGHTS. 1000 cfm flow through controller.	# of Weights: 6 Opening/Gap: _____ DP: _____ in. WG Flow Rate: _____ ACFM ___*___ SCFM Temp: _____F RH: _____% Duct Pressure: _____ in WG OBSERVATIONS: _____ TORR _____
Six (6) WEIGHTS. 1500 cfm flow through controller.	# of Weights: 6 Opening/Gap: _____ DP: _____ in. WG Flow Rate: _____ ACFM ___*___ SCFM Temp: _____F RH: _____% Duct Pressure: _____ in WG OBSERVATIONS: _____ TORR _____
Six (6) WEIGHTS. 2000 cfm flow through controller.	# of Weights: 6 Opening/Gap: _____ DP: _____ in. WG Flow Rate: _____ ACFM ___*___ SCFM Temp: _____F RH: _____% Duct Pressure: _____ in WG OBSERVATIONS: _____ TORR _____
Six (6) WEIGHTS. 2500 cfm flow through controller.	# of Weights: 6 Opening/Gap: _____ DP: _____ in. WG Flow Rate: _____ ACFM ___*___ SCFM Temp: _____F RH: _____% Duct Pressure: _____ in WG OBSERVATIONS: _____ TORR _____
Six (6) WEIGHTS. 3000 cfm flow through controller.	# of Weights: 6 Opening/Gap: _____ DP: _____ in. WG Flow Rate: _____ ACFM ___*___ SCFM Temp: _____F RH: _____% Duct Pressure: _____ in WG OBSERVATIONS: _____ TORR _____

PERFORMANCE TEST DATA SHEET

Page ___ of ___
Test Date: _____

Seven (7) WEIGHTS. Controller barely starts to rise.	# of Weights: 7 Opening/Gap: _____ DP: _____ in. WG Flow Rate: _____ ACFM ___*___ SCFM Temp: _____F RH: _____% Duct Pressure: _____ in WG OBSERVATIONS: _____TORR_____
Seven (7) WEIGHTS. 500 cfm flow through controller.	# of Weights: 7 Opening/Gap: _____ DP: _____ in. WG Flow Rate: _____ ACFM ___*___ SCFM Temp: _____F RH: _____% Duct Pressure: _____ in WG OBSERVATIONS: _____TORR_____
Seven (7) WEIGHTS. 1000 cfm flow through controller.	# of Weights: 7 Opening/Gap: _____ DP: _____ in. WG Flow Rate: _____ ACFM ___*___ SCFM Temp: _____F RH: _____% Duct Pressure: _____ in WG OBSERVATIONS: _____TORR_____
Seven (7) WEIGHTS. 1500 cfm flow through controller.	# of Weights: 7 Opening/Gap: _____ DP: _____ in. WG Flow Rate: _____ ACFM ___*___ SCFM Temp: _____F RH: _____% Duct Pressure: _____ in WG OBSERVATIONS: _____TORR_____
Seven (7) WEIGHTS. 2000 cfm flow through controller.	# of Weights: 7 Opening/Gap: _____ DP: _____ in. WG Flow Rate: _____ ACFM ___*___ SCFM Temp: _____F RH: _____% Duct Pressure: _____ in WG OBSERVATIONS: _____TORR_____
Seven (7) WEIGHTS. 2500 cfm flow through controller.	# of Weights: 7 Opening/Gap: _____ DP: _____ in. WG Flow Rate: _____ ACFM ___*___ SCFM Temp: _____F RH: _____% Duct Pressure: _____ in WG OBSERVATIONS: _____TORR_____
Seven (7) WEIGHTS. 3000 cfm flow through controller.	# of Weights: 7 Opening/Gap: _____ DP: _____ in. WG Flow Rate: _____ ACFM ___*___ SCFM Temp: _____F RH: _____% Duct Pressure: _____ in WG OBSERVATIONS: _____TORR_____

PERFORMANCE TEST DATA SHEET

Page ___ of ___
Test Date: _____

NOTES: _____

	Print	Sign	Date
Test Performer			
Project Engineer			
QA			
Customer, if Required			

Signature Log				
Printed Name	Signature	Initials	Phone	Cell Phone