ENGINEERING DATA TRANSMITTAL

1. EDT 825738
1A. Page 1 of 6

2. To: (Receiving Organization) Distribution

3. From: (Originating Organization) Columbia Energy & Environmental Services, Inc.

4. Related EDT No.: NA

5. Structure Location: NA

6. Proj./Prog./Dept./Div.: A and AX Tank Farm Ventilation

7. Responsible Engineer/Design Agent: Mark Dallas

8. System Designator: NA

9. Building No.: NA

10. Originator Remarks: This EDT approved for release the document in Block 18. Design verification performed per Columbia Energy procedure CE-ES-3.3.

11. Technical Baseline Document ☒ Yes ☐ No

12. Equipment ID No. (EIN): NA

13. Permit/Permit Application No.: NA

14. USQ No.: R- ☒ N/A -8
USQ Evaluator Sign/Date 9/5/14

14(A). TBDs or HOLDs In the Data Transmitted? ☐ Yes ☒ No

16. Purchase Order No.: NA

14(B). Project Number or Identifier: T2R02

15. PrHA Screening No.: See Block #19 ☐ N/A 9/5/14

17. Required Response Date: NA

18. DATA TRANSMITTED

(A) Item No.	(B) Document/Drawing No.	(C) Sheet No.	(D) Rev. No.	(E) Title or Description of Data Transmitted	(F) Hard-copy or PDF	(G) Approval Designator	(H) Reason for Transmittal	(I) Originator Disposition	(J) Receiver Disposition
1	RPP-SPEC-57470	N/A	0	Procurement Specification for Vacuum Controller in 241-A and 241-AX Tank Farm Ventilation BW 9/9/14	~~H~~ PDF	NA	1	1	1

19. IMPACTED DOCUMENTS – NON ENGINEERING

Type of Document	Document Number
~~NA~~ PrHA Screening	PrHA- ~~NA~~ 02038 02039 02040 02041 02042 02043 02044 02045 02046

20. IMPACTED DOCUMENTS – ENGINEERING

Type of Document	Document Number
~~NA~~ 02047	NA

21. KEY

Approval Designator (G)	Reason for Transmittal (H)	Disposition (I)
See TFC-ENG-DESIGN-C-52	1. Approval 2. Review 3. Distribution	1. Approved 2. Approved w/comment 3. Reviewed no comment 4. Reviewed w/comment 5. Disapproved

22. SIGNATURE/DISTRIBUTION

(H) Reason	(I) Disp.	(J) Name	(K) Signature	(L) Date	(M) MSIN
1	1	Originator J Campbell		7-29-14	CEES
1	1	Resp. Engr. ME Dallas	Mark E. Dallas	9/5/14	R1-07
1	1	Design Auth. ME Dallas	Mark E. Dallas	9/5/14	R1-07
1	1	Resp. Mgr. R Bauer		9/8/14	S7-66
		QA NA			
		IH&S Engr. NA			
		Env. Engr. NA			
1	1	AE Design Verification D Cap		7/30/14	CEES
1	1	AE Checker G Wilson		7/29/14	CEES

23. DOE APPROVAL (if required)
Ctrl. No. N/A

24. Release Date/Station/ID
Sep 30, 2014 19

BD-7400-172.2 (REV 8)

EDT-825738

TOC – INTERIM REVIEW COMMENT RECORD (RCR)	1. Date 06/18/2014	2. Review No. 1
	3. Project No. T2R02/AX Ventilation	Page 1 of 2

5. Document Number(s)/Title(s)	6. Program/Project/Building Number	7. Reviewer	8. Organization/Group	9. Location/Phone
RPP-SPEC-57470, Procurement Specification for Vacuum Controller in 241-A and 241-AX Tank farm Ventilation.	T2R02/AX Ventilation	~~JR Bellomy~~ ME DALLAS 9/5/14	Retrieval Engineering	2704HV/372-1673

10. Comment Submittal Approval	11. Agreement With Indicated Comment Disposition(s)	12. CLOSED
Date: ____ Organization Manager (optional) (print and sign): ____	Reviewer/Point of Contact (print and sign): MARK DALLAS Mark E. Dallas Date: 7-29-14 Author/Originator (print and sign): John Campbell	Reviewer/Point of Contact (print and sign): mark E. DALLAS Mark E. Dallas Date: 7-29-14 Author/Originator (print and sign): John Campbell

13. Comment Summary (Enter quantities of comments by category from 16):

2 Administrative (a) 0 Preference (b) 0 LTA Design Input (c) 5 LTA Design Output (d) 0 N/A (e) 7 Total

13b. Design Agent: CEES

14. Item	15. Comments	16. Basis	16a. Category (a, b, c, d, e)	17. Recommendation	18. Reviewer Concurrence Required (Y or N)	19. Disposition (provide justification if **NOT** accepted)	20. Status
1	Drawing H-14-106608, Sheet 2 refers to RPP-SPEC-37361. Is RPP-SPEC-54570 planned to be replaced by RPP-SPEC-37361? If so, why isn't RPP-SPEC-37361 just being revised?		d	Ditch the new specification and revise/update the old specification.		Acknowledged; the new spec was written based on previous project direction. Current design media all points to this spec. Changing this spec would require updating all affected design media. See ECN-14-000398 for the addition of this spec to H-14-106608.	C
2	RPP-SPEC-37361 is generic while RPP-SPEC-57470 is specific to A and AX Vacuum controllers. It is not clear why a new specification is needed. Recommend just revising the existing specification.		d	Ditch the new specification and revise/update the old specification.		Acknowledged; the new spec was written based on previous project direction. Current design media all points to this spec. Changing this spec would require updating all affected design media.	C
3	Section 3.3.3. Revise Section to reference MSR process for document submittals.		a	Modify as noted.		Accept; will include MSR wording provided.	C

A-6006-228 (REV 0)

EDT-825738

TOC – INTERIM REVIEW COMMENT RECORD (RCR)	1. Date 06/18/2014	2. Review No. 1
	3. Project No. T2R02/AX Ventilation	Page 2 of 2

14. Item	15. Comments	16. Basis	16a. Category (a, b, c, d, e)	17. Recommendation	18. Reviewer Concurrence Required (Y or N)	19. Disposition (provide justification if **NOT** accepted)	20. Status
4	Table 1. Refer to MSR for "When Required" dates.		a	Modify as noted.		Accept	
5	Section 4.2 identifies that 2 separate units with different ranges may be provided. Are two separate units planned for A/AX ventilation? It was my understanding that only one of the units was required for A and AX.		d	Ditch the new specification and revise/update the old specification. Leave requirements for both units in the specification.		Acknowledged; will leave both units in the specification.	C
6	Section 4.3.2. The first bullet on page 10 refers to a sample data sheet for leakage rate calculations. The sample sheet is not included.		d	Include sample data sheet in the specification.		Accept	C
7	Section 2.0. The section refers to H-14-106608 for identification of national codes and standards. All applicable codes and standards and edition need to be included in this section.		d	Eliminate reference to H-14-106608 for identification of applicable codes and standards and identify all applicable code and standards in Section 2. Ensure editions identified are consistent with those identified in the level II Specification.		Accept	C

NOTE: Item # 16 Categories: (a) Administrative, (b) Preference, (c) LTA Design Input, (d) LTA Design Output, or (e) N/A

EDT-825738

TOC – INTERIM REVIEW COMMENT RECORD (RCR)

1. Date	2. Review No.
06/18/2014	1
3. Project No. T2R02/AX Ventilation	Page 1 of 1

5. Document Number(s)/Title(s)	6. Program/Project/Building Number	7. Reviewer	8. Organization/Group	9. Location/Phone
RPP-SPEC-57470, Procurement Specification for Vacuum Controller in 241-A and 241-AX Tank farm Ventilation.	T2R02/AX Ventilation	M Dallas	Retrieval Engineering	

10. Comment Submittal Approval	11. Agreement With Indicated Comment Disposition(s)	12. CLOSED
Date: ____ Organization Manager (optional) (print and sign): ____	MARK E. DALLAS Mark E. Dallas 8/28/14 Reviewer/Point of Contact (print and sign)	MARK E. DALLAS Mark E. Dallas 8/28/14 Reviewer/Point of Contact (print and sign)
	Date: 7-29-14 John Campbell Author/Originator (print and sign)	Date: 7-29-14 John Campbell Author/Originator (print and sign)

13. Comment Summary (Enter quantities of comments by category from 16):

2 Administrative (a) 0 Preference (b) 0 LTA Design Input (c) 5 LTA Design Output (d) 0 N/A (e) 7 Total

13b. Design Agent: CEES

14. Item	15. Comments	16. Basis	16a. Category (a, b, c, d, e)	17. Recommendation	18. Reviewer Concurrence Required (Y or N)	19. Disposition (provide justification if NOT accepted)	20. Status
1	General; review document for requirements listed in ASME AG-1 2012.					Accept	C
2	Pg. 8; Review AG-1 2012 requirement for pressure testing.					Accept; AG-1 2012 pressure decay test requires that temperature remains constant within +/- 0.5F. Will increase accuracy requirement of instrument.	C
3	Pg. 8; Correct accuracy range of differential pressure measuring equipment.					Accept; will use 2% of full scale.	C
4	Pg. 10; Review AG-1 2012 for pressure decay method.					Accept; have corrected to AG-1 2012.	C
5	Pg. 7; Correct accuracy range of differential pressure measuring equipment.					Accept; will use 2% of full scale.	C

NOTE: Item # 16 Categories: (a) Administrative, (b) Preference, (c) LTA Design Input, (d) LTA Design Output, or (e) N/A

A-6006-228 (REV 0)

EDT-825738

TOC – INTERIM REVIEW COMMENT RECORD (RCR)	1. Date 06/18/2014	2. Review No. 1
	3. Project No. T2R02/AX Ventilation	Page 1 of 2

5. Document Number(s)/Title(s)	6. Program/Project/Building Number	7. Reviewer	8. Organization/Group	9. Location/Phone
RPP-SPEC-57470, Procurement Specification for Vacuum Controller in 241-A and 241-AX Tank farm Ventilation.	T2R02/AX Ventilation	J Lohrasbi	Retrieval Engineering	

10. Comment Submittal Approval	11. Agreement With Indicated Comment Disposition(s)	12. CLOSED
Date / Organization Manager (optional) (print and sign)	J. Lohrasbi Reviewer/Point of Contact (print and sign); 7-29-14 Date; John Campbell Author/Originator (print and sign)	J. Lohrasbi Reviewer/Point of Contact (print and sign); 7-29-14 Date; John Campbell Author/Originator (print and sign)

13. Comment Summary (Enter quantities of comments by category from 16):

2 Administrative (a) 0 Preference (b) 0 LTA Design Input (c) 5 LTA Design Output (d) 0 N/A (e) 7 Total

13b. Design Agent: CEES

14. Item	15. Comments	16. Basis	16a. Category (a, b, c, d, e)	17. Recommendation	18. Reviewer Concurrence Required (Y or N)	19. Disposition (provide justification if NOT accepted)	20. Status
1	Pg. Attach-3; Change reference to Figure A1 to Figure 1					Acknowledged; this is an attachment and as such figure numbering begins at A1. The caption for the figure was left on the previous page and the image itself includes the title Figure 1, thus the confusion. Figure 1 is in the main body of the document.	C
2	Pg. 10; reference for the vacuum controller adjustments					Acknowledged; these are vacuum controller test instructions and the increments are based on the weights defined in H-14-106068. The increment for the 20 IN WG unit has been corrected.	C
3	Pg. 8; reference for calibrated differential pressure gauge range and accuracy.					Acknowledged; based on additional comments the accuracy reference will fit more in line with available equipment.	C

A-6006-228 (REV 0)

EDT-825738

TOC – INTERIM REVIEW COMMENT RECORD (RCR)	1. Date 06/18/2014	2. Review No. 1
	3. Project No. T2R02/AX Ventilation	Page 2 of 2

14. Item	15. Comments	16. Basis	16a. Category (a, b, c, d, e)	17. Recommendation	18. Reviewer Concurrence Required (Y or N)	19. Disposition (provide justification if NOT accepted)	20. Status
4	Pg. Attach-2; reference for static pressure range of fan or blower.					Acknowledged; this attachment is an example test setup for the 0.5 to 4 in WG vac controller. This range is chosen to provide enough capability to meet the requirements of the test.	C
5	Pg. 5; reference for functional characteristics.					Acknowledged; split pressure range to reflect two separate units.	C

NOTE: Item # 16 Categories: (a) Administrative, (b) Preference, (c) LTA Design Input, (d) LTA Design Output, or (e) N/A

RPP-SPEC-57470, Rev. 0

Procurement Specification for Vacuum Controller in 241-A and 241-AX Tank Farm Ventilation

Author Name: John Campbell
Columbia Energy & Environmental Services, Inc.

Richland, WA 99354
U.S. Department of Energy Contract DE-AC27-08RV14800

EDT/ECN: EDT-825738 UC:
Cost Center: Charge Code:
B&R Code: Total Pages: ~~35~~ 41 JRR 9/30/14

Key Words: Vacuum Relief, Control Device, Tank Ventilation, Portable Exhauster, AX-Farm, A-Farm

Abstract: This document provides the procurement requirements of the vacuum controller used in the ventilation systems of the 241-A and 241-AX tank farms.

TRADEMARK DISCLAIMER. Reference herein to any specific commercial product, process, or service by trade name, trademark, manufacturer, or otherwise, does not necessarily constitute or imply its endorsement, recommendation, or favoring by the United States Government or any agency thereof or its contractors or subcontractors.

APPROVED
By Julia Raymer at 7:27 am, Sep 30, 2014

Release Approval Date

DATE:
Sep 30, 2014
HANFORD RELEASE

Release Stamp

Approved For Public Release

TABLE OF CONTENTS

1.0 SCOPE 1

2.0 APPLICABLE DOCUMENTS 1

3.0 TECHNICAL REQUIREMENTS 1
- 3.1 ITEM DEFINITION 1
  - 3.1.1 Item Diagram 1
  - 3.1.2 Interface Definition 1
- 3.2 CHARACTERISTICS 1
  - 3.2.1 Functional Characteristics 1
  - 3.2.2 Physical Characteristics 2
  - 3.2.3 Maintainability 2
  - 3.2.4 Environment 2
- 3.3 DESIGN AND CONSTRUCTION 2
  - 3.3.1 Parts/Materials/Processes 2
  - 3.3.2 Nameplate 2
  - 3.3.3 Submittals 2
  - 3.3.4 Approval of Submittals 3

4.0 QUALITY ASSURANCE REQUIREMENTS 4
- 4.1 ACCEPTANCE CRITERIA 4
- 4.2 VERIFICATION 4
  - 4.2.1 Responsibility for Verification 5
  - 4.2.2 Verification Methods 5
- 4.3 INSPECTIONS AND TESTS 7
  - 4.3.1 Performance Test Instructions 7
  - 4.3.2 Leak Testing, Pressure Decay Method 8

5.0 PREPARATION FOR DELIVERY 9
- 5.1 PRESERVATION AND PACKAGING 9
- 5.2 MARKING 9
- 5.3 SHIPPING AND HANDLING 9

LIST OF ATTACHMENTS

1 Master Submittal Register 1-i

2 Testing Procedure Example 2-i

3 Sample Data/Calculation Sheet for Pressure Decay Test (Vacuum Controllers) 3-i

LIST OF FIGURES

Figure 1. Performance Test Set-Up (Vacuum Controller). 5
Figure 2. Leak Test Set-Up (Vacuum Controller).....6

LIST OF TERMS

Abbreviations and Acronyms

ANSI	American National Standards Institute
BTR	Buyer's Technical Representative
ECN	Engineering Change Notice
FTP	File Transfer Protocol
MSR	Master Submittal Register
NPT	national pipe thread
PO	purchase order
TOC	Tank Farms Operating Contractor
WST	waste storage tank

Units

cfm	cubic feet per minutes
F	Fahrenheit
psi	pound per square inch
SCFM	standard cubic foot per minute
WG	water gauge

1.0 SCOPE

This specification provides the requirements for fabrication, assembly, inspection, testing, and shipment of the Tank Vacuum Relief and Control Device. The Tank Vacuum Relief and Control Device shall be fabricated and assembled in accordance with drawing H-14-106608, *Tank Vacuum Relief and Control Device*, including any applicable Engineering Change Notices (ECN).

2.0 APPLICABLE DOCUMENTS

1. ASME AG-1, 2012, *Code on Nuclear Air and Gas Treatment*, American Society of Mechanical Engineers, New York, New York.
2. H-14-106608, *Tank Vacuum Relief and Control Device*, Sheets 1-3, Rev. 2, Washington River Protection Solutions, LLC, Richland, Washington.
3. RPP-SPEC-57420, 2014, *241-A and 241-AX Tank Farm Ventilation System Level 2 Specification*, Rev. 0, Washington River Protection Solutions, LLC, Richland, Washington.
4. TFC-BSM-IRM_DC-C-07, *Vendor Processes*, Washington River Protection Solutions, LLC, Richland, Washington.
5. TFC-ENG-STD-07, *Ventilation System Design Standard*, Washington River Protection Solutions, LLC, Richland, Washington.

The current version of the documents shall be used unless otherwise specified. In the event of a conflict between the documents referenced therein and the requirements of this specification, the requirements of this specification shall take precedence.

3.0 TECHNICAL REQUIREMENTS

3.1 ITEM DEFINITION

3.1.1 Item Diagram

See H-14-106608 for item layout and material requirements.

3.1.2 Interface Definition

The vacuum controllers shall interface with planned A/AX Tank Farm ventilation systems.

3.2 CHARACTERISTICS

3.2.1 Functional Characteristics

- Shall comply with ASME AG-1 and TFC-ENG-STD-07
- Flow of up to 3000 standard cubic feet per minute (SCFM)

- Adjustable between 0.5 inch water gauge (WG) and 4 inches WG or 5 inches WG and 20 inches WG
- Shall include ¼ inch national pipe thread (NPT) test port
- Shall include inlet screen with ½ inch square opening.

3.2.2 Physical Characteristics

The vacuum controller assembly shall interface with a 12 inch class 150 American National Standards Institute (ANSI) flange.

3.2.3 Maintainability

The vacuum controller assembly shall allow for routine maintenance, repair, or replacement-in-kind of equipment subject to failure.

3.2.4 Environment

The vacuum controller assembly shall withstand exposure to the environments defined in RPP-SPEC-57420, *241-A and 241-AX Tank Farm Ventilation System Level 2 Specification.*

3.3 DESIGN AND CONSTRUCTION

3.3.1 Parts/Materials/Processes

The vacuum controller assembly parts/materials/processes are defined by H-14-106608.

3.3.2 Nameplate

See H-14-106608, General Note 5, for nameplate specifications.

3.3.3 Submittals

Required submittals are identified and listed on the Master Submittal Register (MSR), ATTACHMENT 1Attachment 1. The attached MSR identifies the minimum submittals required by this specification and identifies when the submittals are required to be submitted in the procurement process. An MSR specific to each order will be prepared at the time of purchase order preparation and may contain additional submittal requirements or exclude submittals identified by the MSR included in Attachment 1. The MSR included with the purchase order will constitute the governing MSR.

Submittals shall be provided using the Tank Farms Operating Contractor (TOC) Incoming Letter of Transmittal (form A-6005-315). All transmittal subject headings shall contain, at a minimum, the subcontract number, submittal number identified by the MSR, and submittal description.

Submittals shall be provided in electronic format unless available only as a hard copy. Electronic submittals may be sent to TOCVND@rl.gov or delivered via a WRPS designated File Transfer Protocol (FTP) site. Electronic formats must be non-password protected in one of the following formats:

- Microsoft® Office Compatible
- Portable Document Format (PDF)
- Tagged Image File Format (TIFF)
- Graphics Interchange Format (GIF)
- Joint Photographic Experts Group (JPEG)
- Windows Media Video (WMV)
- Moving Picture Expert Group (MPEG)
- Extensible Markup Language (XML)
- HyperText Markup Language (HTML)
- Comma Separated Values (CSV)
- Text (TXT)

All deliverable documentation shall be complete, accurate, legible, and reproducible. Before delivery, design media and documents shall be reviewed by qualified Subcontractor personnel for technical adequacy and appropriate content in accordance with the Subcontractor's Quality Assurance procedures. The Subcontractor shall attest, in writing, to the accuracy and completeness of the information contained in the final deliverables.
Deliverables shall be subject to approval by the Buyer's Technical Representative (BTR). Deliverables shall comply with this specification and technical basis documents and other requirements identified herein.

3.3.4 Approval of Submittals

All Submittals transmitted shall include the designation in the MSR per TOC Vendor Processes stated in TFC-BSM-IRM_DC-C-07. Submittals are divided into two types: (1) those requiring "approval" (e.g., approval data or pre-purchase evaluation data) and (2) those "not requiring approval" (e.g., vendor information data). Submittals "not requiring approval" will be reviewed to verify completeness and adequacy for their intended purposes.

A submittal requiring approval that is not approved is identified as follows:

- "Not Approved Revise and Resubmit." The submittal is considered technically deficient, or incomplete, and therefore unacceptable. Resubmittal is required, hence the fabrication, procurement, or performance of procedures shall not proceed; or
- "Approved with Exception." Fabrication, procurement, and performance may proceed, and resubmittal is required to verify incorporation of the exception.

Submittals "not requiring approval" that are determined to be incomplete or inadequate will be marked "Resubmit." An explanation of the deficiencies will be included for corrective action by the Seller.

Approval by the Buyer does not relieve the Seller of responsibility for accuracy or adequacy of design under this specification.

If any revision has been made to previously submitted items, the Seller shall resubmit updated versions of said items for approval, in addition to the items listed above.

® Microsoft is a registered trademark of Microsoft Corporation.

Certified data shall be defined to mean that the design adequacy of a given item (e.g., document, drawing, calculation) be verified by persons other than those who prepared the item. Each deliverable (e.g., drawing, calculation) shall have at least an originator's/preparer's signature and a checked-by or approved-by signature.

4.0 QUALITY ASSURANCE REQUIREMENTS

This equipment has been classified as General Service, Enhanced Quality (Quality Level 3).

4.1 ACCEPTANCE CRITERIA

The Tank Vacuum Relief and Control Device shall be inspected and tested in accordance with drawing H-14-106608, General Notes, and the following sections.

The Buyer reserves the right to witness all tests and shall be given a minimum of five working days written notice prior to each test date.

Prior to the performance of these tests, the Seller shall submit a procedure for testing to the Buyer for review and approval (not required for weld inspection and examination). Test information recorded or calculated shall be documented and submitted to the Buyer.

4.2 VERIFICATION

This test verifies key performance capabilities of the vacuum relief/controller units (design drawing H-14-106608). Two separate units may be fabricated, one with a differential pressure setting range up to 4 inches WG (for installation on a waste tank), the other one settable up to 20 inches WG (for installation in ventilation ductwork). The scope of this test includes the following items for each unit.

1. Verify proper actuation and clearance between the moving component and housing by cycling the vacuum controller repeatedly through its physical range of operation at each setting.
2. Verify the range of possible differential pressure settings. The basic requirement for the tank vacuum controller is to have a differential pressure adjustment range of 0.5 to 4 inches WG, adjustable in approximately 0.5 inch WG increments. The basic requirement for the ductwork vacuum controller is that it be able to actuate at vacuum levels up to 20 inches WG (it is designed to be settable from 5 to 20 inches WG, adjustable in 2.5 inch WG increments).
3. At each setting (or selected settings), obtain differential pressure data at flow rates from the opening point to 3000 cubic feet per minute (cfm).
4. Perform leak test of unit using ASME AG-1 pressure decay method.

Data sheets shall be created to clearly identify and record all necessary test data (such as but not limited to, test engineer, test date, equipment identification information, measurement data, calculations, as applicable). Consult the customer engineering representative for any questions concerning these tests.

4.2.1 Responsibility for Verification

The design contractor shall be responsible for the performance of all inspections for each system developed in accordance with this specification. Inspections shall be conducted at the contractor facilities or the facilities of their choice with the approval of the procuring authority. The procuring authority reserves the right to witness or perform the specified inspections.

4.2.2 Verification Methods

4.2.2.1 Test Equipment for Performance Testing

The following equipment is needed for performance testing of the vacuum controllers. See Figure 1 for performance test set-up.

- Fan or blower capable of 3000 cfm at 25 inches WG.
- Damper or butterfly valve to adjust fan flow.
- Calibrated air flow rate measuring equipment (up to 3000 cfm, accuracy +/-5 percent), with capability to adjust for temperature and relative humidity and provide flow rate in standard cubic feet per minute (SCFM). Air flow measuring equipment shall be located and operated per the manufacturer's instructions (e.g., relative to upstream or downstream flow disturbances).
- Calibrated differential pressure measuring equipment (minimum range of 0 to 30 inches WG, accuracy of +/-2 percent of full scale).
- Test fixture to hold vacuum controller in a vertical position and allow horizontal connection to ductwork (see Figure 1).
- 12 inch diameter ductwork, sufficient straight length to obtain good air flow rate readings (per manufacturer's recommendations).
- Miscellaneous fittings to connect fan, test fixture, vacuum controller, instruments, etc.

Figure 1. Performance Test Set-Up (Vacuum Controller).

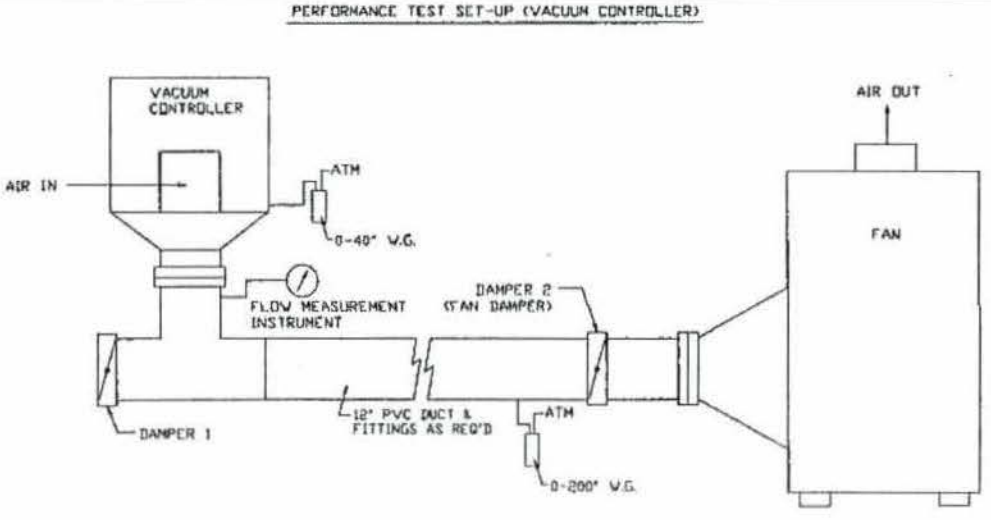

4.2.2.2 Test Equipment for Leak Testing

The following equipment is needed to perform leak (pressure decay) testing of the vacuum controllers. See Figure 2 for leak test set-up.

- Calibrated differential pressure measuring equipment with range of 0 to 30 inches WG, and accuracy of +/-2% of full scale.
- Calibrated barometer, accurate to +/-0.01 inches Hg or use weather station data.
- Calibrated temperature indicator, accurate to +/-0.25 degrees F. Approximate range of 0 to 150 degrees F.
- Clock or timer accurate to +/-1.0 second over the anticipated test duration (approximately 15 minutes). A standard stopwatch is acceptable.
- Pressure source capable of 1 pound per square inch (psi), with appropriate isolation valve(s) and pressure relief mechanism.
- Miscellaneous fittings to connect instruments and equipment to test assembly.
- Blanks, gaskets and bolts, and/or other materials necessary to seal temporary connections and test penetrations in the assembly.
- Bubble solution for detecting air leaks.

Figure 2. Leak Test Set-Up (Vacuum Controller).

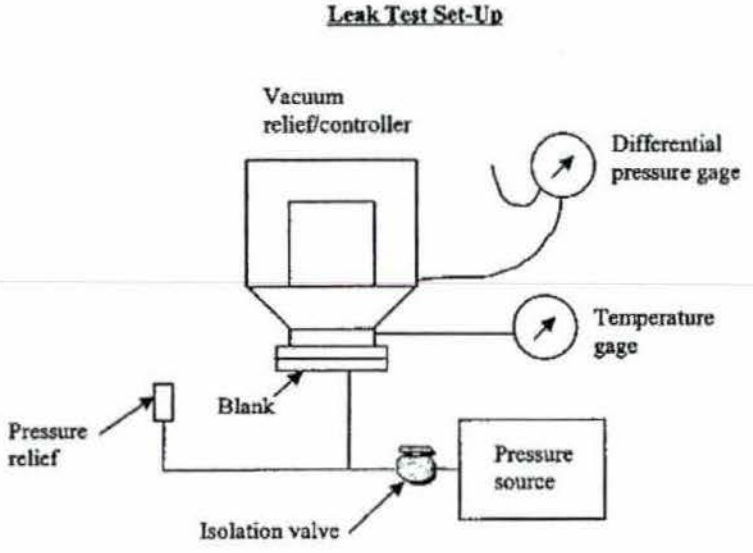

4.3 INSPECTIONS AND TESTS

4.3.1 Performance Test Instructions

The basic test steps are outlined below. The test should be performed in the order specified. A test data sheet shall be created to record all pertinent test information. See Attachment 2 for example test procedure.

Start-Up

- Set up equipment per sketch and test engineer's instructions.
- Record instrument and equipment data (e.g., manufacturer, model, calibration expiration dates for measurement devices; vacuum controller identification number).
- Record other pertinent test information.
- Make sure all weights are removed from the vacuum controller's moving component and are hung on the weight storage hooks.
- Make sure fan damper is closed.
- Turn on fan.

Cycling and Observations

- Slowly open and close "damper 1" 25 times to cause vacuum controller to cycle.

  NOTE: *DO NOT rapidly open and close the damper such as to cause the vacuum controller to slam up and down -this may damage the vacuum controller. While cycling the damper, observe and record how the vacuum controller is operating (e.g., does it move smoothly and operate quietly?, is there vibration/noise?, does it stick in spots?).*

- If the vacuum controller sticks in any way or otherwise does not appear/sound to be operating correctly (it should move relatively smoothly and quietly), then the clearances between the housing and moving component need to be checked and adjusted if necessary. Consult customer engineering representative before performing any adjustments or alterations.

Performance Testing

- Record number of weights hung on moving component of vacuum controller and theoretical setting (based on sum of stamped pressures on float and weights).
- Close inlet screen on vacuum controller.
- Adjust damper so that the controller just barely starts to rise (or is on the verge of opening).
- Measure and record flow rate.
- Measure and record vacuum controller differential pressure.
- Record approximate height of opening/gap at top of controller.

- Observe and record how the vacuum controller is operating (e.g., can a slight rocking motion be observed in the moving component?, is there any vibration or noise?).
- Repeat the above 4 steps at 500 cfm increments up to 3000 cfm. Other data points between any of these increments may also be obtained at the discretion of the test engineer.
- Close damper.
- Adjust the vacuum controller setting to the next 0.5 inch WG increment for the 4 inch WG unit (or the next 2.5 inch WG increment for the 20 inch WG unit) by hanging weight(s). Repeat all of the above Cycling and Performance testing steps. Repeat this step at each incremental setting up to about 4 inches WG for the 4 inch WG unit (or 20 inches WG for the 20 inch WG unit).

Obtain data for maximum flow rate(s) possible through vacuum controller (given fan used) at various differential pressure settings as specified by customer engineering representative.

4.3.2 Leak Testing, Pressure Decay Method

The basic steps of the leak test include the following. Steps that are not applicable to the inspection/testing may be omitted. The test and test results shall be documented. A sample data/calculation sheet is provided.

<u>Pressure Decay Leak Test of Vacuum Relief/Controller</u>

- Set up equipment per sketch and test engineer's instructions.
- Isolate the end (bottom) of vacuum controller using a temporary blank. Note that if sufficient test ports are not available in the vacuum controller, use blanks that have available test ports. See important NOTE below also.
- Install and seal temperature measuring instrument into one of the ports in the vacuum controller. Record equipment information.
- Install and seal pressure measuring instrument into one of the ports in the vacuum controller. Record equipment information.
- Install pressurization source (with isolation valve and pressure relief mechanism) at one of the ports in the vacuum controller.
- Pressurize the vacuum controller to the pressure indicated by the customer. As necessary, locate (using a suitable bubble solution, audible methods, or other) and seal all leaks as best as possible.
- Maintain constant pressure until temperature remains constant within +/-0.5 degrees F for a minimum of 10 minutes.
- Isolate the air supply from the vacuum controller while starting the clock. Record initial pressure and temperature.
- Record pressure and temperature readings a minimum of once a minute until pressure decays to 75 percent of starting pressure or for a minimum of 15 minutes, whichever comes first.

- Record final time, pressure, and temperature.
- Perform the leakage rate calculations as outlined on the sample data sheet (Attachment 3). If/Q/ < L then record "PASS." Otherwise, record "RETEST."
- If a retest is needed, determine the leak path(s) using the bubble leak location and/or audible leak location method. Repair leaks and perform the above steps again using new data sheets.
- Restore equipment to its pre-test configuration. Remove test equipment and temporary blanks and re-install test port plugs.

NOTE: *This pressure decay test is also used to effectively pre-test the joints that are not testable after installation (e.g., in this case, all seals in the vacuum controller housing since there will be no valves between the vacuum controller and the tank). Therefore, the gaskets installed for testing shall be the same size/dimensions and material as that specified in the installation design. The bolts used for the testing shall be the same size as that specified in the installation design, and installed in the same manner (if manner not specified, then per standard industrial practice). Any temporary blanks used shall have the same basic dimensions (e.g., hole size and pattern) as the vacuum controller flange. Tape or other sealants shall not be used to help seal any of the joints or the temporary blanks (except for instrument and test equipment connections).*

5.0 PREPARATION FOR DELIVERY

5.1 PRESERVATION AND PACKAGING

All items shall be dried and cleaned to protect against rust and corrosion. All items shall be protected from dirt, soil, and moisture and packaged for long term storage in an unprotected exterior environment. All items shall be boxed or crated, as required to eliminate damage during shipping, handling, and storage. Temporary bracing, fixtures, or hardware installed to stabilize furnished items during shipment or handling (excluding packaging materials) shall be tagged or otherwise identified so that it can be removed before installation or operation of the item.

5.2 MARKING

Packages shall be suitably marked on the outside to facilitate identification of the purchase order, the procurement specification, the package contents, and any special handling instructions.

5.3 SHIPPING AND HANDLING

The Seller shall recommend the preferred transportation method and provide protection of the equipment during transit and storage. The Seller shall submit to the Buyer for review and approval a Shipping and Handling Plan that includes preservation, packaging, shipping, storage, and lifting procedures. Buyer approval of the plan is required before packaging and shipment. If a special type of transportation to protect equipment is required, those devices shall be part of the Seller's package and identified as special equipment.

ATTACHMENT 1

MASTER SUBMITTAL REGISTER

TOC MASTER SUBMITTAL REGISTER (MSR)

1. MSR Number (COMPLETED BY DOCUMENT CONTROL)				2. REV:
3. Requisition: TBD	4. Subcontract Release: TBD	5. Purchase Order: TBD	6. Title: AX-Farm Ventilation System Design	7. Vendor Name: TBD
8. Responsible Person: J. R. Bellomy		9. Project No.: T2R02		10. Date:

11. Submittal Number	12. Specification	13. SOW Section Number	14. Description	15. Purpose	16. Submittal Schedule	17. When Required	18. Date Submittal Due From Vendor	19. WRPS Turnaround		20. Number of Copies E / H
								External	Internal	
001	N/A	N/A	Certificate of Conformance	INF/ REC		WS				1/1
002	N/A	N/A	Fabrication and Test Traveler	APP		WS			2 wks	1/1
003	N/A	N/A	Test Data and Reports	APP		WS			2 wks	1/1
004	N/A	N/A	Shipping and Handling Plan	APP		WS			2 wks	1/1

Purpose:
APP – Approval INF/REC – Information/Record

Submittal Schedule:
WP – With Proposal
WS – With Shipment
PF – Prior to Fabrication
I – Before Installation
I – Before Installation
PP – Prior to Procurement
P – Before Final Payment
P – Before Final Payment
PS – Prior to Shipment
U- Before Use
U- Before Use
PT – Prior to Testing
UDI – Upon Date Identified
UDI – Upon Date Identified

ATTACHMENT 2

TESTING PROCEDURE EXAMPLE

TESTING PROCEDURE EXAMPLE

1.0 PURPOSE AND SCOPE

The purpose of this document is to describe and document results of performance testing for vacuum relief/controller units for installation on a waste tank (reference design drawing H-14-106608).

The scope of this testing includes:

- Verifying proper actuation and clearance between the moving component and housing by cycling the vacuum controller repeatedly through its range of operation at each setting.
- Verifying the range of possible differential pressure settings. The basic requirement for the tank vacuum controller is to have a differential pressure adjustment range of 0.5 to 4 inches water gauge (WG), adjustable in approximately 0.5 inch WG increments.
- At each setting, obtaining differential pressure data at flow rates from the opening point to 3000 cubic feet per minute (cfm).

2.0 RESPONSIBILITIES

The following personnel will be required for the performance of this procedure:

- Project Engineer: The individual assigned direct responsibility for the performance, preparation, and adequacy of the test.
- Test Performer: The individual assigned responsibility for performance of the test.
- Quality Assurance or Quality Control (QA/QC) Representative: The individual assigned responsibility for verifying quality of the testing performed.
- Customer Witness: Verify testing and results.

Only personnel designated by the Project Engineer are allowed to direct testing per this procedure, and perform test personnel functions.

Any required changes to this procedure shall be approved by the Customer technical representative and the Project Engineer (or designated representative), and may be made as "red-line" changes in all official and working copies of the procedure. This procedure may be revised or rewritten at the discretion of the Project Engineer, with appropriate entries in the Test Log to describe the changes made and the reasons for the changes. The steps in this procedure may be performed in any order, except as noted, as specified by the Project Engineer or Test Performer.

3.0 DESCRIPTION OF SYSTEM

The vacuum controller is a mechanical design intended for use in relieving and controlling vacuum in large volume tanks. The vacuum controller acts as a vacuum relief device by opening at a specified set point and acts as a vacuum controller to maintain the specified set point.

4.0 TEST CONDITIONS AND EQUIPMENT REQUIRED

Prior to initiation of testing all personnel shall be briefed on the scope of testing to be conducted.

The following test equipment is required for the performance of the tests in this procedure; equipment may be added or deleted as required during testing:

a. Fan or blower capable of 3000 cfm at approximately 6 inches WG static pressure (fully open), 9 inches WG static pressure (dead headed).

b. Damper or butterfly valve to adjust fan flow rate.

c. Calibrated air flow rate measuring equipment (up to 3000 cfm, accuracy +/-5 percent), and provide rate in standard cubic feet per minute (SCFM). Air flow measuring equipment shall be located and operated per the manufacturer's instructions (i.e., relative to upstream or downstream flow disturbances).

d. Calibrated differential pressure measuring equipment (minimum range of 0 to 30 inches WG with an accuracy of +/-2 percent of full scale).

e. Test fixture to hold vacuum controller in a vertical position and allow horizontal connection to ductwork (see Figure 1).

f. 12 inch diameter ductwork with damper, sufficient straight length to obtain good air flow rate readings (per manufacturer's recommendations).

g. Miscellaneous fittings to connect fan, test fixture, *vacuum* controller, instruments, etc.

Figure 1. Performance Test Set-Up (Vacuum Controller).

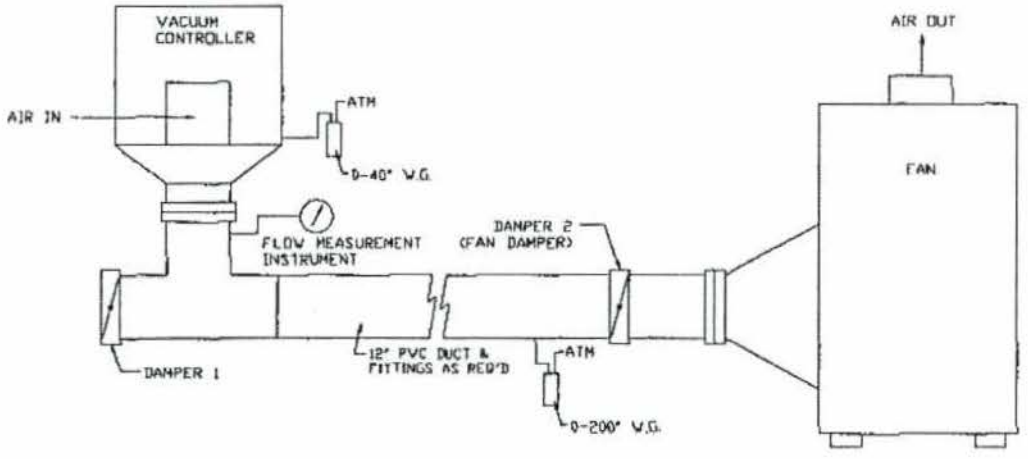

5.0 PRE-TEST VERIFICATIONS

Sections of this procedure should be performed in the order presented; *however,* order may be varied at the discretion of the Project Engineer.

Verify all test equipment is in good working order.

Record calibration data of measuring and test equipment (M&TE) on Performance Data Sheet.

6.0 TEST PROCEDURE

Test Start-up

6.1.1 Set-up the test apparatus per Figure 1 with direction provided by the Project Engineer.

6.1.2 Make sure all weights are removed from the vacuum controller's moving component and are placed on the weight storage hooks.

6.1.3 Make sure both dampers are closed.

6.1.4 Turn on fan.

Cycling and Observations

6.1.5 Fully open Damper 1 near the vacuum controller, and throttle Damper 2 near the fan unit, as required.

6.1.6 Slowly open and close Damper 1 twenty-five (25) times to cause vacuum controller to cycle (see Note below). While cycling the damper(s), observe and record how the Vacuum Controller is operating (i.e., does it move smoothly and operate quietly? Is there noise/scraping? Does it want to stick?)

NOTE: *DO NOT rapidly open and close the dampers such as to cause the vacuum controller to slam up and down – this may damage the vacuum controller. Adjust both dampers as required to prevent this from happening.*

If the vacuum controller sticks in any way or otherwise does not appear/sound to be operating correctly (it should move relatively smoothly and quietly) note this as a deficiency and, if possible, proceed with testing. Any measurements, adjustments and/or alterations will be performed later under Stage Two Testing.

Performance Testing

6.1.7 Record the number of weights hung on the moving component of the Vacuum Controller and the theoretical setting (based on the sum of stamped pressures on float and weights). Start with zero (0) and add one (1) weight with each successive test.

6.1.8 Close the inlet screen on the Vacuum Controller.

6.1.9 Adjust the damper(s) so that the controller just barely starts to rise (or is on the verge of opening).

6.1.10 Measure and record the flow rate (ACFM).

6.1.11 Measure and record the vacuum controller differential pressure (inches WG).

6.1.12 Measure and record duct static pressure (inches WG) for information only.

6.1.13 Measure and record relative humidity (RH) for information only.

6.1.14 Obtain and record temperature (F) and barometric pressure (Torr) for information only. Use of a local weather station is acceptable for obtaining these items.

6.1.15 Record the approximate height of opening/gap at top of controller.

6.1.16 Observe and record how the Vacuum Controller is operating (i.e., can a slight rocking

motion be observed in the moving component? Is there any vibration or noise?).

6.1.17 Repeat steps 6.1.7 through 6.1.16 at 500 cfm increments up to 3000 cfm. Other data points between any of these increments may also be obtained at the discretion of the Project Engineer.

6.1.18 Close damper.

6.1.19 Adjust the Vacuum Controller setting to the next 0.5 inch WG increment by hanging weights. Repeat all Cycling and Performance testing steps (6.1.5 through 6.1.18).

6.1.20 Repeat step 6.1.19 at each incremental setting up to about 4 inches WG.

6.1.21 Obtain data for maximum flow rate possible through the Vacuum Controller (given the fan used) at various differential pressure settings as specified by the customer engineering representative.

7.0 TEST RESULTS

PERFORMANCE TEST DATA SHEET Page ___ of ___ Test Date: _____	
DESCRIPTION	**RECORD DATA**
TEST ITEM	Vacuum Relief Controller Unit ID: _____
Calibrated Airflow Rate Measuring Equipment (accuracy ± 5%)	Manufacturer: _____ Model: _____ S/N: _____ Calibration Due Date: _____
Calibration Differential Pressure Measuring Equipment (accuracy ± 2% of full range)	Manufacturer: _____ Model: _____ S/N: _____ Calibration Due Date: _____
Calibrated Differential Pressure Measuring Equipment (accuracy ± 2% of full range) for the ductwork	Manufacturer: _____ Model: _____ S/N: _____ Calibration Due Date: _____
Calibrated Relative Humidity Instrumentation (accuracy ± 5%)	Manufacturer: _____ Model: _____ S/N: _____ Calibration Due Date: _____ □ Used Weather Station: _____
Calibrated Temperature Measuring Equipment (accuracy ± 0.5 deg. F)	Manufacturer: _____ Model: _____ S/N: _____ Calibration Due Date: _____ □ Used Weather Station: _____
Calibrated Pressure Transducer and Readout	Manufacturer: _____ Model: _____ S/N: _____ Calibration Due Date: _____
CYCLING AND OBSERVATIONS	
Cycle Test with NO (0) weights	25 Cycles Completed □ Notes:_____

PERFORMANCE TEST DATA SHEET Page ___ of ___ Test Date: _____	
Cycle Test with ONE (1) weight	25 Cycles Completed ☐ Notes:_____
Cycle Test with TWO (2) weights	25 Cycles Completed ☐ Notes:_____
Cycle Test with THREE (3) weights	25 Cycles Completed ☐ Notes:_____
Cycle Test with FOUR (4) weights	25 Cycles Completed ☐ Notes:_____

PERFORMANCE TEST DATA SHEET Page ___ of ___ Test Date: _____	
Cycle Test with FIVE (5) weights	25 Cycles Completed □ Notes:_____
Cycle Test with SIX (6) weights	25 Cycles Completed □ Notes:_____
Cycle Test with SEVEN (7) weights	25 Cycles Completed □ Notes:_____

PERFORMANCE TEST DATA SHEET

Page ___ of ___

Test Date: _____

NO WEIGHTS. Controller barely starts to rise.	# of Weights: 0 Opening/Gap: _____ DP: _____ in. WG Flow Rate: _____ ACFM _____ * _____ SCFM Temp: _____ F RH: _____ % Duct Pressure: _____ in. WG OBSERVATIONS: _____ TORR _____
NO WEIGHTS. 500 cfm flow through controller.	# of Weights: 0 Opening/Gap: _____ DP: _____ in. WG Flow Rate: _____ ACFM _____ * _____ SCFM Temp: _____ F RH: _____ % Duct Pressure: _____ in. WG OBSERVATIONS: _____ TORR _____
NO WEIGHTS. 1000 cfm flow through controller.	# of Weights: 0 Opening/Gap: _____ DP: _____ in. WG Flow Rate: _____ ACFM _____ * _____ SCFM Temp: _____ F RH: _____ % Duct Pressure: _____ in. WG OBSERVATIONS: _____ TORR _____
NO WEIGHTS. 1500 cfm flow through controller.	# of Weights: 0 Opening/Gap: _____ DP: _____ in. WG Flow Rate: _____ ACFM _____ * _____ SCFM Temp: _____ F RH: _____ % Duct Pressure: _____ in. WG OBSERVATIONS: _____ TORR _____
NO WEIGHTS. 2000 cfm flow through controller.	# of Weights: 0 Opening/Gap: _____ DP: _____ in. WG Flow Rate: _____ ACFM _____ * _____ SCFM Temp: _____ F RH: _____ % Duct Pressure: _____ in. W OBSERVATIONS: _____ TORR _____
NO WEIGHTS. 2500 cfm flow through controller.	# of Weights: 0 Opening/Gap: _____ DP: _____ in. WG Flow Rate: _____ ACFM _____ * _____ SCFM Temp: _____ F RH: _____ % Duct Pressure: _____ in. WG OBSERVATIONS: _____ TORR _____
NO WEIGHTS. 3000 cfm flow through controller.	# of Weights: 0 Opening/Gap: _____ DP: _____ in. WG Flow Rate: _____ ACFM _____ * _____ SCFM Temp: _____ F RH: _____ % Duct Pressure: _____ in. WG OBSERVATIONS: _____ TORR _____

PERFORMANCE TEST DATA SHEET

Page ___ of ___

Test Date: _____

ONE (1) WEIGHT. Controller barely starts to rise.	# of Weights: 1 Opening/Gap: _____ DP: _____ in. WG Flow Rate: _____ ACFM _____ * _____ SCFM Temp: _____ F RH: _____ % Duct Pressure: _____ in. WG OBSERVATIONS: _____ TORR _____
ONE (1) WEIGHT. 500 cfm flow through controller.	# of Weights: 1 Opening/Gap: _____ DP: _____ in. WG Flow Rate: _____ ACFM _____ * _____ SCFM Temp: _____ F RH: _____ % Duct Pressure: _____ in. WG OBSERVATIONS: _____ TORR _____
ONE (1) WEIGHT. 1000 cfm flow through controller.	# of Weights: 1 Opening/Gap: _____ DP: _____ in. WG Flow Rate: _____ ACFM _____ * _____ SCFM Temp: _____ F RH: _____ % Duct Pressure: _____ in. WG OBSERVATIONS: _____ TORR _____
ONE (1) WEIGHT. 1500 cfm flow through controller.	# of Weights: 1 Opening/Gap: _____ DP: _____ in. WG Flow Rate: _____ ACFM _____ * _____ SCFM Temp: _____ F RH: _____ % Duct Pressure: _____ in. WG OBSERVATIONS: _____ TORR _____
ONE (1) WEIGHT. 2000 cfm flow through controller.	# of Weights: 1 Opening/Gap: _____ DP: _____ in. WG Flow Rate: _____ ACFM _____ * _____ SCFM Temp: _____ F RH: _____ % Duct Pressure: _____ in. WG OBSERVATIONS: _____ TORR _____
ONE (1) WEIGHT. 2500 cfm flow through controller.	# of Weights: 1 Opening/Gap: _____ DP: _____ in. WG Flow Rate: _____ ACFM _____ * _____ SCFM Temp: _____ F RH: _____ % Duct Pressure: _____ in. WG OBSERVATIONS: _____ TORR _____
ONE (1) WEIGHT. 3000 cfm flow through controller.	# of Weights: 1 Opening/Gap: _____ DP: _____ in. WG Flow Rate: _____ ACFM _____ * _____ SCFM Temp: _____ F RH: _____ % Duct Pressure: _____ in. WG OBSERVATIONS: _____ TORR _____

PERFORMANCE TEST DATA SHEET

Page ___ of ___

Test Date: _____

TWO (2) WEIGHTS. Controller barely starts to rise.	# of Weights: 2 Opening/Gap: _____ DP: _____ in. WG Flow Rate: _____ ACFM _____ * _____ SCFM Temp: _____ F RH: _____ % Duct Pressure: _____ in. WG OBSERVATIONS: _____ TORR _____
TWO (2) WEIGHTS. 500 cfm flow through controller.	# of Weights: 2 Opening/Gap: _____ DP: _____ in. WG Flow Rate: _____ ACFM _____ * _____ SCFM Temp: _____ F RH: _____ % Duct Pressure: _____ in. WG OBSERVATIONS: _____ TORR _____
TWO (2) WEIGHTS. 1000 cfm flow through controller.	# of Weights: 2 Opening/Gap: _____ DP: _____ in. WG Flow Rate: _____ ACFM _____ * _____ SCFM Temp: _____ F RH: _____ % Duct Pressure: _____ in. WG OBSERVATIONS: _____ TORR _____
TWO (2) WEIGHTS. 1500 cfm flow through controller.	# of Weights: 2 Opening/Gap: _____ DP: _____ in. WG Flow Rate: _____ ACFM _____ * _____ SCFM Temp: _____ F RH: _____ % Duct Pressure: _____ in. WG OBSERVATIONS: _____ TORR _____
TWO (2) WEIGHTS. 2000 cfm flow through controller.	# of Weights: 2 Opening/Gap: _____ DP: _____ in. WG Flow Rate: _____ ACFM _____ * _____ SCFM Temp: _____ F RH: _____ % Duct Pressure: _____ in. W OBSERVATIONS: _____ TORR _____
TWO (2) WEIGHTS. 2500 cfm flow through controller.	# of Weights: 2 Opening/Gap: _____ DP: _____ in. WG Flow Rate: _____ ACFM _____ * _____ SCFM Temp: _____ F RH: _____ % Duct Pressure: _____ in. WG OBSERVATIONS: _____ TORR _____
TWO (2) WEIGHTS. 3000 cfm flow through controller.	# of Weights: 2 Opening/Gap: _____ DP: _____ in. WG Flow Rate: _____ ACFM _____ * _____ SCFM Temp: _____ F RH: _____ % Duct Pressure: _____ in. WG OBSERVATIONS: _____ TORR _____

PERFORMANCE TEST DATA SHEET

Page ___ of ___

Test Date: _____

THREE (3) WEIGHTS. Controller barely starts to rise.	# of Weights: 3 Opening/Gap: _____ DP: _____ in. WG Flow Rate: _____ ACFM_____*_____SCFM Temp: _____ F RH: _____% Duct Pressure: _____ in. WG OBSERVATIONS: _____ TORR _____
THREE (3) WEIGHTS. 500 cfm flow through controller.	# of Weights: 3 Opening/Gap: _____ DP: _____ in. WG Flow Rate: _____ ACFM_____*_____SCFM Temp: _____ F RH: _____% Duct Pressure: _____ in. WG OBSERVATIONS: _____ TORR _____
THREE (3) WEIGHTS. 1000 cfm flow through controller.	# of Weights: 3 Opening/Gap: _____ DP: _____ in. WG Flow Rate: _____ ACFM_____*_____SCFM Temp: _____ F RH: _____% Duct Pressure: _____ in. WG OBSERVATIONS: _____ TORR _____
THREE (3) WEIGHTS. 1500 cfm flow through controller.	# of Weights: 3 Opening/Gap: _____ DP: _____ in. WG Flow Rate: _____ ACFM_____*_____SCFM Temp: _____ F RH: _____% Duct Pressure: _____ in. WG OBSERVATIONS: _____ TORR _____
THREE (3) WEIGHTS. 2000 cfm flow through controller.	# of Weights: 3 Opening/Gap: _____ DP: _____ in. WG Flow Rate: _____ ACFM_____*_____SCFM Temp: _____ F RH: _____% Duct Pressure: _____ in. WG OBSERVATIONS: _____ TORR _____
THREE (3) WEIGHTS. 2500 cfm flow through controller.	# of Weights: 3 Opening/Gap: _____ DP: _____ in. WG Flow Rate: _____ ACFM_____*_____SCFM Temp: _____ F RH: _____% Duct Pressure: _____ in. WG OBSERVATIONS: _____ TORR _____
THREE (3) WEIGHTS. 3000 cfm flow through controller.	# of Weights: 3 Opening/Gap: _____ DP: _____ in. WG Flow Rate: _____ ACFM_____*_____SCFM Temp: _____ F RH: _____% Duct Pressure: _____ in. WG OBSERVATIONS: _____ TORR _____

PERFORMANCE TEST DATA SHEET

Page ___ of ___

Test Date: _____

FOUR (4) WEIGHTS. Controller barely starts to rise.	# of Weights: 4 Opening/Gap: _____ DP: _____ in. WG Flow Rate: _____ ACFM_____*_____SCFM Temp: _____ F RH: _____% Duct Pressure: _____ in. WG OBSERVATIONS: _____TORR_____
FOUR (4) WEIGHTS. 500 cfm flow through controller.	# of Weights: 4 Opening/Gap: _____ DP: _____ in. WG Flow Rate: _____ ACFM_____*_____SCFM Temp: _____ F RH: _____% Duct Pressure: _____ in. WG OBSERVATIONS: _____TORR_____
FOUR (4) WEIGHTS. 1000 cfm flow through controller.	# of Weights: 4 Opening/Gap: _____ DP: _____ in. WG Flow Rate: _____ ACFM_____*_____SCFM Temp: _____ F RH: _____% Duct Pressure: _____ in. WG OBSERVATIONS: _____TORR_____
FOUR (4) WEIGHTS. 1500 cfm flow through controller.	# of Weights: 4 Opening/Gap: _____ DP: _____ in. WG Flow Rate: _____ ACFM_____*_____SCFM Temp: _____ F RH: _____% Duct Pressure: _____ in. WG OBSERVATIONS: _____TORR_____
FOUR (4) WEIGHTS. 2000 cfm flow through controller.	# of Weights: 4 Opening/Gap: _____ DP: _____ in. WG Flow Rate: _____ ACFM_____*_____SCFM Temp: _____ F RH: _____% Duct Pressure: _____ in. WG OBSERVATIONS: _____TORR_____
FOUR (4) WEIGHTS. 2500 cfm flow through controller.	# of Weights: 4 Opening/Gap: _____ DP: _____ in. WG Flow Rate: _____ ACFM_____*_____SCFM Temp: _____ F RH: _____% Duct Pressure: _____ in. WG OBSERVATIONS: _____TORR_____
FOUR (4) WEIGHTS. 3000 cfm flow through controller.	# of Weights: 4 Opening/Gap: _____ DP: _____ in. WG Flow Rate: _____ ACFM_____*_____SCFM Temp: _____ F RH: _____% Duct Pressure: _____ in. WG OBSERVATIONS: _____TORR_____

PERFORMANCE TEST DATA SHEET

Page ___ of ___

Test Date: _____

FIVE (5) WEIGHTS. Controller barely starts to rise.	# of Weights: 5 Opening/Gap: _____ DP: _____ in. WG Flow Rate: _____ ACFM _____ * _____ SCFM Temp: _____ F RH: _____ % Duct Pressure: _____ in. WG OBSERVATIONS: _____ TORR _____
FIVE (5) WEIGHTS. 500 cfm flow through controller.	# of Weights: 5 Opening/Gap: _____ DP: _____ in. WG Flow Rate: _____ ACFM _____ * _____ SCFM Temp: _____ F RH: _____ % Duct Pressure: _____ in. WG OBSERVATIONS: _____ TORR _____
FIVE (5) WEIGHTS. 1000 cfm flow through controller.	# of Weights: 5 Opening/Gap: _____ DP: _____ in. WG Flow Rate: _____ ACFM _____ * _____ SCFM Temp: _____ F RH: _____ % Duct Pressure: _____ in. WG OBSERVATIONS: _____ TORR _____
FIVE (5) WEIGHTS. 1500 cfm flow through controller.	# of Weights: 5 Opening/Gap: _____ DP: _____ in. WG Flow Rate: _____ ACFM _____ * _____ SCFM Temp: _____ F RH: _____ % Duct Pressure: _____ in. WG OBSERVATIONS: _____ TORR _____
FIVE (5) WEIGHTS. 2000 cfm flow through controller.	# of Weights: 5 Opening/Gap: _____ DP: _____ in. WG Flow Rate: _____ ACFM _____ * _____ SCFM Temp: _____ F RH: _____ % Duct Pressure: _____ in. WG OBSERVATIONS: _____ TORR _____
FIVE (5) WEIGHTS. 2500 cfm flow through controller.	# of Weights: 5 Opening/Gap: _____ DP: _____ in. WG Flow Rate: _____ ACFM _____ * _____ SCFM Temp: _____ F RH: _____ % Duct Pressure: _____ in. WG OBSERVATIONS: _____ TORR _____
FIVE (5) WEIGHTS. 3000 cfm flow through controller.	# of Weights: 5 Opening/Gap: _____ DP: _____ in. WG Flow Rate: _____ ACFM _____ * _____ SCFM Temp: _____ F RH: _____ % Duct Pressure: _____ in. WG OBSERVATIONS: _____ TORR _____

PERFORMANCE TEST DATA SHEET

Page ___ of ___

Test Date: _____

SIX (6) WEIGHTS. Controller barely starts to rise.	# of Weights: 6 Opening/Gap: _____ DP: _____ in. WG Flow Rate: _____ ACFM _____ * _____ SCFM Temp: _____ F RH: _____ % Duct Pressure: _____ in. WG OBSERVATIONS: _____ TORR _____
SIX (6) WEIGHTS. 500 cfm flow through controller.	# of Weights: 6 Opening/Gap: _____ DP: _____ in. WG Flow Rate: _____ ACFM _____ * _____ SCFM Temp: _____ F RH: _____ % Duct Pressure: _____ in. WG OBSERVATIONS: _____ TORR _____
SIX (6) WEIGHTS. 1000 cfm flow through controller.	# of Weights: 6 Opening/Gap: _____ DP: _____ in. WG Flow Rate: _____ ACFM _____ * _____ SCFM Temp: _____ F RH: _____ % Duct Pressure: _____ in. WG OBSERVATIONS: _____ TORR _____
SIX (6) WEIGHTS. 1500 cfm flow through controller.	# of Weights: 6 Opening/Gap: _____ DP: _____ in. WG Flow Rate: _____ ACFM _____ * _____ SCFM Temp: _____ F RH: _____ % Duct Pressure: _____ in. WG OBSERVATIONS: _____ TORR _____
SIX (6) WEIGHTS. 2000 cfm flow through controller.	# of Weights: 6 Opening/Gap: _____ DP: _____ in. WG Flow Rate: _____ ACFM _____ * _____ SCFM Temp: _____ F RH: _____ % Duct Pressure: _____ in. WG OBSERVATIONS: _____ TORR _____
SIX (6) WEIGHTS. 2500 cfm flow through controller.	# of Weights: 6 Opening/Gap: _____ DP: _____ in. WG Flow Rate: _____ ACFM _____ * _____ SCFM Temp: _____ F RH: _____ % Duct Pressure: _____ in. WG OBSERVATIONS: _____ TORR _____
SIX (6) WEIGHTS. 3000 cfm flow through controller.	# of Weights: 6 Opening/Gap: _____ DP: _____ in. WG Flow Rate: _____ ACFM _____ * _____ SCFM Temp: _____ F RH: _____ % Duct Pressure: _____ in. WG OBSERVATIONS: _____ TORR _____

PERFORMANCE TEST DATA SHEET

Page ___ of ___

Test Date: _____

SEVEN (7) WEIGHTS. Controller barely starts to rise.	# of Weights: 7 Opening/Gap: _____ DP: _____ in. WG Flow Rate: _____ ACFM _____ * _____ SCFM Temp: _____ F RH: _____ % Duct Pressure: _____ in. WG OBSERVATIONS: _____ TORR _____
SEVEN (7) WEIGHTS. 500 cfm flow through controller.	# of Weights: 7 Opening/Gap: _____ DP: _____ in. WG Flow Rate: _____ ACFM _____ * _____ SCFM Temp: _____ F RH: _____ % Duct Pressure: _____ in. WG OBSERVATIONS: _____ TORR _____
SEVEN (7) WEIGHTS. 1000 cfm flow through controller.	# of Weights: 7 Opening/Gap: _____ DP: _____ in. WG Flow Rate: _____ ACFM _____ * _____ SCFM Temp: _____ F RH: _____ % Duct Pressure: _____ in. WG OBSERVATIONS: _____ TORR _____
SEVEN (7) WEIGHTS. 1500 cfm flow through controller.	# of Weights: 7 Opening/Gap: _____ DP: _____ in. WG Flow Rate: _____ ACFM _____ * _____ SCFM Temp: _____ F RH: _____ % Duct Pressure: _____ in. WG OBSERVATIONS: _____ TORR _____
SEVEN (7) WEIGHTS. 2000 cfm flow through controller.	# of Weights: 7 Opening/Gap: _____ DP: _____ in. WG Flow Rate: _____ ACFM _____ * _____ SCFM Temp: _____ F RH: _____ % Duct Pressure: _____ in. WG OBSERVATIONS: _____ TORR _____
SEVEN (7) WEIGHTS. 2500 cfm flow through controller.	# of Weights: 7 Opening/Gap: _____ DP: _____ in. WG Flow Rate: _____ ACFM _____ * _____ SCFM Temp: _____ F RH: _____ % Duct Pressure: _____ in. WG OBSERVATIONS: _____ TORR _____
SEVEN (7) WEIGHTS. 3000 cfm flow through controller.	# of Weights: ____ Opening/Gap: _____ DP: _____ in. WG Flow Rate: _____ ACFM _____ * _____ SCFM Temp: _____ F RH: _____ % Duct Pressure: _____ in. WG OBSERVATIONS: _____ TORR _____

PERFORMANCE TEST DATA SHEET

Page ___ of ___

Test Date: _____

NOTES: _____

	Print	Sign	Date
Test Performer			
Project Engineer			
QA			
Customer, if Required			

Signature Log				
Printed Name	Signature	Initials	Phone	Cell Phone

ATTACHMENT 3

SAMPLE DATA/CALCULATION SHEET FOR PRESSURE DECAY TEST (VACUUM CONTROLLERS)

SAMPLE DATA/CALCULATION SHEET FOR PRESSURE DECAY TEST (VACUUM CONTROLLERS)	
Test lead or responsible engineer (print name and sign):	Date:
Component title, drawing and assembly number:	
Component identification (serial) number:	
Retest number:	
Post-fabrication or post-installation test?	
Results (Pass or Fail):	
Pressure Decay Test Data/Comments	
Instrument Data	
Manufacturer:	Model:
Identification number (serial or other):	
Calibration expiration date:	
Instrument Data	
Manufacturer:	Model:
Identification number (serial or other):	
Calibration expiration date:	
Time:	
Initial Pressure (IN WG):	Initial Temperature (deg F):
Pressure (IN WG):	Temperature (deg F):
Final Time:	
Final Pressure (IN WG):	Final Temperature (deg F):
Test Parameter/Calculation	
(A) Beginning pressure in inches WG =	
(B) Beginning pressure in psig (A/27.7) =	
(C) Beginning barometric pressure in psi (IN Hg x 0.491) =	
(P1) Beginning pressure in psfa (B + C)144 =	
(D) Beginning temperature in deg F =	
(T1) Beginning temperature in deg R (D + 460) =	
(E) Ending pressure in inches WG =	
(F) Ending pressure in psig (E/27.7) =	
(G) Ending barometric pressure in psi (IN Hg x 0.491) =	
(P2) Ending pressure in psfa (F + G)144 =	
(H) Ending temperature in deg F =	
(T2) Ending temperature in deg R (H + 460) =	
(V) Test volume in cubic feet (attach calculation) =	
(R) R, gas constant, in ft lb/(lb*deg R) = 53.35	
(ΔT) Test Duration in minutes =	
(Q) Average total leakage rate in standard cubic feet per minute. A factor of 10% shall be added to (Q) for any tests involving the testing of joints which hare not testable after installation (e.g., flange of vacuum controller that is mounted directly to tank riser flange. Q = (P1/T1 – P2/T2)V/(R * ΔT * .075) =	
(L) Allowable Leak Rate in standard cubic feet per minute (to be determined by customer) =	