DOCUMENT RELEASE AND CHANGE FORM

Prepared For the U.S. Department of Energy,
Assistant Secretary for Environmental Management
By Washington River Protection Solutions, LLC., PO Box 850, Richland, WA 99352
Contractor For U.S. Department of Energy, Office of River Protection, under Contract DE-AC27-08RV14800

1a. **Doc No:** RPP-SPEC-60226 **Rev.** 01

1b. **Project Number:** T1P128 ☐ N/A

TRADEMARK DISCLAIMER: Reference herein to any specific commercial product, process, or service by trade name, trademark, manufacturer, or otherwise, does not necessarily constitute or imply its endorsement, recommendation, or favoring by the United States government or any agency thereof or its contractors or subcontractors.

Printed in the United States of America.

Release Stamp

DATE: Oct 15, 2015 HANFORD RELEASE

2. **Document Title**
Procurement Specification for Double-Shell Tank Waste Transfer Pumps

3. **Design Verification Required**
☐ Yes ☒ No

4. **USQ Number** ☐ N/A
N/A-3

5. **PrHA Number** ☒ N/A
Rev.

6. **USQ Screening:**

a. Does the change introduce any new failure modes to the equipment? ☐ **Yes** ☒ **No**
Basis is required for Yes:_____

b. Does the change increase the probability of existing failure modes? ☐ **Yes** ☒ **No**
Basis is required for Yes:

c. For Safety Significant equipment, does the change require a modification to Chapter 4 of the DSA and/or FRED? ☐ **Yes** ☒ **No** ☐ **N/A**
Basis is required for Yes:

7. **Description of Change and Justification** (Use Continuation pages as needed)

Updated pump lengths to support changes to procurement quantities and specific tanks requiring pump replacements over the next three years.

Updated terminology to keep a more consistent naming convention for certain components within the pump.

Corrected Section 2.0 tables for proper identification of Code of Record and Non Code of Record documents.

Provided additional information related to the requirements of the ASME B31.3 analysis for the pump discharge piping.

Added additional information related to the interface with third part inspections (IQRPEs) during the design and fabrication of the pump assemblies.

8. **Approvals**

Title	Name	Signature	Date
Clearance Review	BRATTON, GAYLA E	BRATTON, GAYLA E	10/15/2015
Design Authority	ENGEMAN, JASON K	ENGEMAN, JASON K	10/13/2015
Checker	KENNEDY, DOUGLAS J	KENNEDY, DOUGLAS J	10/14/2015
Document Control Approval	HONEYCUTT, COLLEEN	HONEYCUTT, COLLEEN	10/15/2015
Environmental Protection	CHAPIN, MILES K	ENGEMAN, JASON K for CHAPIN, MILES K per telecon	10/13/2015
Originator	ENGEMAN, JASON K	ENGEMAN, JASON K	10/13/2015
Other Approver	SCOTT, MARK A	SCOTT, MARK A	10/13/2015
Other Approver	MACKEY, TOM	MACKEY, TOM	10/14/2015
Other Approver	GOESSMANN, GLEN E	GOESSMANN, GLEN E	10/13/2015
Other Approver	RAMBO, CHARLES L	RAMBO, CHARLES L	10/13/2015

Please see continuation sheet

9. **Clearance Review:**

Restriction Type:

☒ Public
☐ Undefined
☐ Unclassified Controlled Nuclear Information (UCNI)
☐ Export Control Information (ECI)
☐ Official Use Only Exemption 2-Circumvention of Statute (OUO-2)
☐ Official Use Only Exemption 3-Statutory Exemption (OUO-3)
☐ Official Use Only Exemption 4-Commercial/Proprietary (OUO-4)
☐ Official Use Only Exemption 5-Privileged Information (OUO-5)
☐ Official Use Only Exemption 6-Personal Privacy (OUO-6)
☐ Official Use Only Exemption 7-Law Enforcement (OUO-7)

DOCUMENT RELEASE AND CHANGE FORM

Doc No: RPP-SPEC-60226 **Rev.** 01

10. **Distribution:**

Name	**Organization**
BAIDE, DAN	TF PROJECTS & INTEGRITY ENGRNG
BARNES, TRAVIS J	TANK AND PIPELINE INTEGRITY
BLAAK, TODD M	COGNIZANT SYSTEM ENGINEERING
CHAPIN, MILES K	RETRVL & CLOSURE/PROJ ENV CMPL
ENGEMAN, JASON K	TF PROJECTS & INTEGRITY ENGRNG
EVERETT, BRIAN K	SHIFT OPERATIONS
GOESSMANN, GLEN E	ENGINEERING PROGRAMS
HUNTER, JEFF	TFP RADCON
KENNEDY, DOUGLAS J	TF PROJECTS & INTEGRITY ENGRNG
MACKEY, TOM	ENGINEERING PROGRAMS
MAY, DUSTIN R	TF PROJECTS & INTEGRITY ENGRNG
MOBERG, TIMOTHY P	TF PROJECTS & INTEGRITY ENGRNG
RAMBO, CHARLES L	ENGINEERING PROGRAMS
SCOTT, MARK A	ENGINEERING PROGRAMS
STAM, ERIK C	WST STORAGE/TNK MONITORING ENG
ULK, PAUL F	TFP PROJECT MANAGEMENT

11. **TBDs or Holds** ☒ N/A

12. **Impacted Documents – Engineering** ☒ N/A

Document Number	**Rev.**	**Title**

13. **Other Related Documents** ☐ N/A

Document Number	**Rev.**	**Title**
H-2-91943 SH 001	08	PROCESS TURBINE PUMP-AN-AW-AP
H-2-91943 SH 002	07	PROCESS TURBINE PUMP-AN-AW-AP
H-2-91943 SH 003	06	PROCESS TURBINE PUMP AN-AW-AP

14. **Related Systems, Structures, and Components:**

14a. **Related Building/Facilities** ☒ N/A	14b. **Related Systems** ☐ N/A	14c. **Related Equipment ID Nos. (EIN)** ☒ N/A
	241-WT	

DOCUMENT RELEASE AND CHANGE FORM CONTINUATION SHEET

Document No: RPP-SPEC-60226 **Rev.** 01

8. **Approvals**

Title	Name	Signature	Date
Other Approver	BLAAK, TODD M	BLAAK, TODD M	10/13/2015
Other Approver	BERKEY, JAMES	BERKEY, JAMES	10/13/2015
Quality Assurance	BURGESS, JACK	BURGESS, JACK	10/14/2015
Radiological Control	HUNTER, JEFF	HUNTER, JEFF	10/13/2015
Responsible Engineering Manager	MOBERG, TIMOTHY P	MOBERG, TIMOTHY P	10/14/2015
USQ Evaluator	JONES, ROY (BUD)	JONES, ROY (BUD)	10/14/2015

N/A

RPP-SPEC-60226, Rev. 1

Procurement Specification for Double-Shell Tank Waste Transfer Pumps

Author Name:
JK ENGEMAN
Washington River Protection Solutions, LLC
Richland, WA 99352
U.S. Department of Energy Contract DE-AC27-08RV14800

EDT/ECN: UC:
Cost Center: Charge Code:
B&R Code: Total Pages: 42 CGH, 10/15/15

Key Words: waste transfer pump, vertical turbine pump, double shell tank pump

Abstract: This specification provides the minimum requirements for a waste transfer system vertical turbine pump for use in double-shell waste storage tanks. These pumps shall be used for supernatant transfers between double-shell tanks. Work includes design, fabrication, assembly, inspection, testing, documentation, packaging, and shipping.

TRADEMARK DISCLAIMER. Reference herein to any specific commercial product, process, or service by trade name, trademark, manufacturer, or otherwise, does not necessarily constitute or imply its endorsement, recommendation, or favoring by the United States Government or any agency thereof or its contractors or subcontractors.

APPROVED
By GE Bratton at 9:43 am, Oct 15, 2015

Release Approval Date

DATE:
Oct 15, 2015
HANFORD RELEASE

Release Stamp

Approved For Public Release

TABLE OF CONTENTS

1.0 SCOPE 8

2.0 APPLICABLE DOCUMENTS 8
2.1 Non-Government Code of Record Documents 8
2.2 Non-Government Non-Code of Record Documents 9
2.3 Government Documents 10

3.0 TECHNICAL REQUIREMENTS 10
3.1 Item Definition 10
3.1.1 Equipment Description 10
3.1.2 Interface Definition 11
3.2 Characteristics 12
3.2.1 Fluid Characteristics 12
3.2.2 Pump Functional Characteristics 13
3.2.3 Pump Physical Characteristics 15
3.2.4 Reliability 21
3.2.5 Environment 21
3.3 Design and Construction 22
3.3.1 ASME B31.3 Design/Analysis 23
3.3.2 Seismic Design/Analysis 24
3.3.3 Rotor Dynamic Analysis 24
3.3.4 Critical Speed Analysis 24
3.3.5 Pump Assembly Installation and Lift Point Design/Analysis 25
3.3.6 Materials 27
3.3.7 Drawings and Manuals 27
3.3.8 Fabrication/Assembly Processes 28
3.3.9 Cleaning and Painting 28
3.3.10 Special Tools 29
3.3.11 Marking 29

4.0 QUALITY ASSURANCE REQUIREMENTS 30
4.1 Quality Assurance Program 30
4.2 Qualifications 30
4.2.1 Welding Personnel and Procedures 30
4.2.2 Welding Inspectors and Procedures 31
4.3 Inspections and Tests 31
4.3.1 Weld Inspection and Examination 32
4.3.2 Megger Test 33
4.3.3 Pump Motor Driver Testing 33
4.3.4 Hydrostatic Test 33
4.3.5 Vertical Lift/Clearance Test 33
4.3.6 Pre-Pump Run-In Performance Test 34
4.3.7 Pump Sealing System Leak Check 34
4.3.8 Tank Pump-Out Test 34
4.3.9 Pump Minimum Submergence Startup Test 34
4.3.10 Pump Run-in Test 34

4.3.11 Post-Pump Run-In Performance Test 35
5.0 DOCUMENT SUBMITTAL 35
5.1 Approval of Submittals 36
5.2 List of Submittals 37
6.0 PREPARATION FOR DELIVERY 39
6.1 Preservation and Packaging 39
6.2 Marking 39
6.3 Shipping and Handling 40

LIST OF APPENDICES

APPENDIX A. PUMP DISCHARGE DRAIN LINE ARRANGEMENT EXAMPLE 41

LIST OF FIGURES

Figure 3-1. Typical Transfer Pump Pit Arrangement 12
Figure 3-2. Pump System Curve 15

LIST OF TABLES

Table 2-1. Non-Government Code of Record Documents 8
Table 2-2. Non-Government Documents 10
Table 2-3. Government Documents 10
Table 3-1. Fluid Properties (Slurry) 12
Table 3-2. Fluid Composition 13
Table 3-3. Pump Performance Requirements 14
Table 3-4. Pump Length Dimensions 16
Table 3-5. Pump Operating Environmental Conditions 22
Table 5-1. Summary of Submittals 36

LIST OF TERMS

Abbreviations and Acronyms

ANSI	American National Standards Institute
ASME	American Society of Mechanical Engineers
ASNT	American Society for Nondestructive Testing
AWS	American Welding Society
B&PVC	Boiler and Pressure Vessel Code
COR	Code of Record
DST	Double Shell Tank
IEEE	Institute of Electrical and Electronics Engineers

MSR	Master Submittal Register
NEMA	National Electrical Manufacturers Association
NFPA	National Fire Protection Association
NIST	National Institute of Standards and Technology
NRTL	Nationally Recognized Testing Laboratory
QA	Quality Assurance
QC	Quality Control
TIC	Total Inorganic Constituents
TOC	Tank Operating Contractor
TOC	Total Organic Constituents
UL	Underwriters Laboratories

Units

cP	centipoise
°F	degrees Fahrenheit
ft	foot
ftH_2O	feet of water
g/mL	grams per milliliter
gal	gallons
gpm	gallons per minute
hp	horsepower
hrs	hours
Hz	Hertz
in.	inch
kg	kilogram
kg/L	Kilograms per liter
lb/ft^3	pounds per cubic foot
mA	milliamps
mg/kg	milligrams per kilogram
mg/L	milligrams per liter
pH	power of Hydrogen ions
rad/hr	radiation dose per hour
RPM	revolutions per minute
SpG	specific gravity
VAC	volts alternating current
VDC	volts direct current
W/ft	Watts per foot

1.0 SCOPE

This specification provides minimum requirements for multiple process lubricated vertical turbine type pumps with varying lengths and performance for use in underground storage tanks at the U.S. Department of Energy's Hanford Site in southeastern Washington State. Also included for each pump are a motor, shipping strong back, and any handling equipment required to maneuver the assembled pump.

Work includes design, fabrication, assembly, inspection, testing, documentation, packaging, and shipping of pumps. If multiple pumps are to be procured, the requirements for the pumps may differ (e.g. overall length, performance requirements, etc.). Pump quantities and pump designations (Reference Section 3.2.2 and 3.2.3) shall be specified in the procurement documentation (i.e. statement of work, material request, etc.). All requirements in this specification and all references to a single pump are to be applied to each of the pumps except where specifically noted.

Work does not include site services and installation or operation of equipment.

2.0 APPLICABLE DOCUMENTS

The following documents form a part of the basis of design to the extent specified in the applicable sections of this specification. In the event that the requirements of this specification are more restrictive than the requirements of the documents referenced herein, the requirements of this specification take precedence.

2.1 Non-Government Code of Record Documents

The following documents of the exact issue shown in Table 2-1 form a part of this specification to the extent specified herein and establishes the Code of Record (COR). In the event of conflict between the documents referenced herein and the contents of this specification, the contents of this specification shall be considered a superseding requirement.

Table 2-1. Non-Government Code of Record Documents

Document Number	Title
Industry Consensus Codes and Standards	
ANSI/IEEE Standard 43, 2000	*IEEE Recommended Practice for Testing Insulation Resistance of Rotating Machinery,* American National Standards Institute (ASNI)/Institute of Electrical and Electronics Engineers (IEEE), New York, New York.
ANSI/IEEE Standard 112	*Standard Test Procedure for Polyphase Induction Motors and Generators*
ANSI/HI 14.6, 2011	*Rotodynamic Pumps for Hydraulic Performance Acceptance Tests,* ANSI/Hydraulic Institute (HI), New York, New York.
API-610, 2010	*Centrifugal Pumps for Petroleum, Petrochemical and Natural Gas Industries*
ASCE 7, 2010	*Minimum Design Loads for Buildings and Other Structures*

Document Number	Title
Industry Consensus Codes and Standards	
ASME B&PVC, Section IX, 2013	*Boiler and Pressure Vessel Code* (B&PVC) – *Welding and Brazing Qualifications*, American Society of Mechanical Engineers (ASME), New York, New York.
ASME B31.3, 2012	*Process Piping*, American Society of Mechanical Engineers, New York, New York.
ASME BTH-1, 2014	*Design of Below-the-Hook Lifting Devices*, New York, New York.
ASME B30.20, 2013	*Below-the-Hook Lifting Devices*, New York, New York.
ASME NQA-1, 2008 w/ 2009a	*Quality Assurance Requirements for Nuclear Facility Applications*, American Society of Mechanical Engineers (ASME), New York, New York.
ASME Y14.1, 2012	*Decimal Inch Drawing Sheet Size and Format*, American Society of Mechanical Engineers, New York, New York.
ASME Y14.2M, 2008	*Line Conventions and Lettering*, American Society of Mechanical Engineers, New York, New York.
ASME Y14.3M, 2003	*Multi and Sectional View Drawings*, American Society of Mechanical Engineers, New York, New York.
ASME Y14.5M, 2009	*Dimensioning and Tolerancing*, American Society of Mechanical Engineers, New York, New York.
ASME Y14.38, 2007	*Abbreviations and Acronyms*, American Society of Mechanical Engineers, New York, New York.
ASNT SNT-TC-1A, 2011	*Recommended Practice*, American Society for Nondestructive Testing (ASNT), Columbus, Ohio.
AWS D1.1, 2010	*Structural Welding Code - Steel*, American Welding Society (AWS), Miami, Florida.
AWS D1.6, 2007	*Structural Welding Code – Stainless Steel*, American Welding Society, Miami, Florida.
AWS QC1, 2007	*Qualification and Certification of Welding Inspectors*, American Welding Society, Miami, Florida.
IBC, 2012	*International Building Code*
ISO 1940-1, 2003	*Mechanical Vibration Balance Requirements for Rotors in a Rigid State*
NEMA Standard MG-1, 2014	*Motors and Generators*, National Electrical Manufacturers Association (NEMA), Arlington, Virginia.
NFPA 70®[1], 2014	*National Electrical Code*®[1], National Fire Protection Association (NFPA), Quincy, Massachusetts.
NIST Handbook 143, 5th Edition, 2007	*State Weights and Measures Laboratories Program Handbook*, National Institute of Standards and Technology (NIST), Harris, G.L., Gaithersburg, Maryland.

2.2 Non-Government Non-Code of Record Documents

Documents listed in Table 2-2 constitute a part of this specification to the extent specified herein. The most current version of the documents shall be used unless otherwise specified. In the event of conflict between the documents referenced herein and the contents of this specification, the contents of this specification shall be considered a superseding requirement.

[1] NFPA 70 and National Electrical Code are registered trademarks of the National Fire Protection Association, Inc., Quincy, Massachusetts.

Table 2-2. Non-Government Documents

Document Number	Title
H-2-91943 Sheet 1 Rev 8	Process Turbine Pump AN-AW-AP
H-2-91943 Sheet 2 Rev 7	Process Turbine Pump AN-AW-AP
H-2-91943 Sheet 3 Rev 6	Process Turbine Pump AN-AW-AP
RPP-8360	Lifting Attachment and Lifted Item Evaluation, A Hanford Tank Operating Contractor Process
TFC-BSM-IRM_DC-C-07	Vendor Processes
TFC-ENG-STD-02	Environmental/Seasonal Requirements for TOC Systems, Structures, and Components
TFC-ENG-STD-06	Design Loads for Tank Farm Facilities
TFC-ENG-STD-22	Piping, Jumpers, and Valves
TFC-ENG-STD-25	Transfer Pumps
TFC-ENG-STD-34	Standard for the Selection of Non-Metallic Materials in Contact with Tank Waste

2.3 Government Documents

Documents listed in Table 2-3 constitute a part of this specification to the extent specified herein. The most current version of the documents shall be used unless otherwise specified. In the event of conflict between the documents referenced herein and the contents of this specification, the contents of this specification shall be considered a superseding requirement.

Table 2-3. Government Documents

Document Number	Title
29 CFR 1910.7	*Definitions and Requirements for a Nationally Recognized Testing Laboratory*
40 CFR 265.192	*Design and Installation of New Tank Systems or Components*
DOE-RL-92-36	*Hanford Site Hoisting and Rigging Manual*
WAC 173-303-640	*Tank Systems*

3.0 TECHNICAL REQUIREMENTS

3.1 Item Definition

3.1.1 Equipment Description

Each pump design shall be of the process lubricated, vertical turbine type. Each pump unit shall conform to API Standard 610, or proven alternative design, except as modified and supplemented by this Specification. The pump unit shall be driven by an electric motor exterior to the tank. A typical transfer pump assembly is shown in drawing H-2-91943, Sheet 1, Assembly 8.

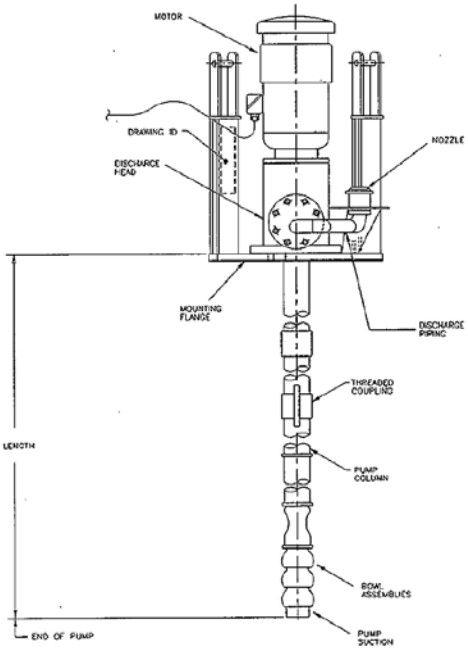

Each pump will be installed into an underground radioactive waste storage tank and used to transfer a potentially abrasive fluid. The tank is 75 feet in diameter, flat-bottomed with a domed top. The liquid capacity of the tank is one million gallons with maximum liquid depth of 38 feet 2 inches. The liquid in the tank may be pumped down to lowest achievable by the pump. Pump access is through a tank riser in a pump pit located just above the waste tank. Within this pump pit piping manifolds are also installed to connect to the pump remotely to allow the transferring of tank waste to another tank. The pump mission does not require simultaneous operation with mixer pumps, i.e. there are no external loads due to operation of other pumps in the same tank.

The pump motor driver will be installed in a closed pump pit and will not be accessible for maintenance. Therefore parts that require maintenance shall be avoided where practicable. There will be long periods of standby time (9 months to 18 months) throughout the pump's life. The Seller shall indicate the duration and frequency of pump "bumping", if required, and flushing, if required, during these idle periods.

3.1.2 Interface Definition

The assembly will be placed inside a 12 inch diameter, Schedule 40 riser located on various tank farms waste storage tanks as a waste transfer pump. The assembly contains a 3 inch specialty mechanical connection (Purex Connector), which will be used to allow the remote connect to the adjoining piping manifolds (jumpers) to the discharge of the pump. See Figure 3-1 for an example of the typical arrangement. Mechanical and electrical interfaces are defined on existing design details and within specification sections.

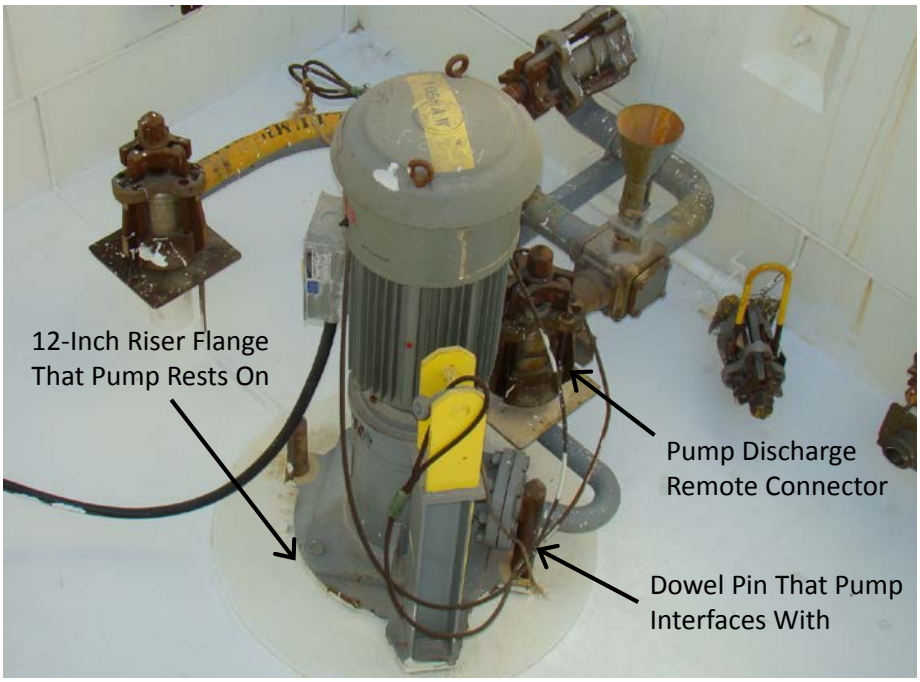

Figure 3-1. Typical Transfer Pump Pit Arrangement

3.2 Characteristics

3.2.1 Fluid Characteristics

The transfer pump will transfer waste with a range of physical properties as listed in Table 3-1.

Table 3-1. Fluid Properties (Slurry)

Waste Property	Range
Specific Gravity	1.0 – 1.5
Absolute Viscosity, cP	1 – 30
Viscosity, cP	< 10
Temperature (flushes/transfers)	50 to 200°F
pH	7-14
Particle Size (Micron)	0.5 – 4,000[1]
Abrasiveness, Miller Number (ASTM G75-82)	< 100
Solids Loading (vol %)	10%

[1] - Although 50 micron particle size is the nominal design point, the pump must be fully capable of operating with the full range of particle sizes. The number of larger (500 to 4000 micron) particles will be relatively small (less than 1% of the total particles). Particles in the range of 50 to 500 micron will constitute less than 5% of the total particles. Particles ranging in size from 0.5 to 50 micron will constitute approximately 95% of the total particles.

The composition in the tank settled solids consists mainly of insoluble oxides and/or hydroxides of aluminum, iron, manganese, and zirconium. The pumps will primarily be transferring the liquid portion of the tank waste (supernatant). Equipment in contact with tank waste shall be compatible with the nominal waste chemical composition listed in Table 3-2.

Table 3-2. Fluid Composition

Compound	wt%	Molarity
KNO_3	1.31	0.17
$NaNO_3$	11.41	1.7
$NaNO_2$	7.38	1.4
Na_2CO_3	3.99	0.5
NaOH	4.61	1.5
$Al(OH)_3$	1.93	0.55
Na_2SO_4	0.64	0.06
NaCl	0.47	0.11
Na_3PO_4	0.49	0.04
NaF	0.10	0.03
Balance of Na^+	1.19	

3.2.2 Pump Functional Characteristics

1.) The transfer pump shall be a self-contained system. Electrical service is supplied as described in Section 3.2.3.3. No other utilities are supplied. If additional services are required for operation such as pump and/or motor cooling, 24 VDC power, the Seller shall specify and supply all appropriate systems or components that are required for operation.

2.) The pump assembly shall be operated via an electric motor with bottom suction and top discharge.

3.) The pump assembly shall be designed and fabricated in accordance with the requirements of this specification.

4.) Each transfer pump and associated equipment is expected to operate for up to 5,000 hours of intermittent operation over a 10 year period without any maintenance other than bumping or flushing.

5.) Pump design point performance and maximum shut off head shall be as listed in Table 3-3. All performance criteria shall be as measured from the pump discharge nozzle (H-2-91943 Item 31) above the pump flange plate. Performance design point and maximum shutoff head assumes no imposed suction head due to tank liquid level. Design point is based off of the system curve shown in Figure 3-1.

6.) Each pump shall deliver the rated head and flow at a minimum net positive suction head available ($NPSH_A$) of 15 feet.

7.) Each pump shall have a stable head/capacity curve that continuously rises from run-out to shut-off.

8.) Pump minimum submergence shall be 11 inches or less. The pump shall able to be started at the minimum submergence depth and meet the pump performance requirements listed in Table 3-3 without the introduction of flush water or back flushing prior to startup.

Table 3-3. Pump Performance Requirements

PUMP DESIGNATION	DESIGN POINT	MAXIMUM SHUTOFF HEAD
PUMP A	225 ft head @ 150 GPM	380 ft
PUMP B	225 ft head @ 150 GPM	380 ft
PUMP C	225 ft head @ 150 GPM	380 ft
PUMP D	225 ft head @ 150 GPM	380 ft
PUMP E	225 ft head @ 150 GPM	385 ft
PUMP F	225 ft head @ 150 GPM	385 ft
PUMP G	225 ft head @ 150 GPM	390 ft
PUMP H	225 ft head @ 150 GPM	390 ft
PUMP I	225 ft head @ 150 GPM	390 ft
PUMP J	225 ft head @ 150 GPM	395 ft
PUMP K	225 ft head @ 150 GPM	400 ft
PUMP L	225 ft head @ 150 GPM	405 ft

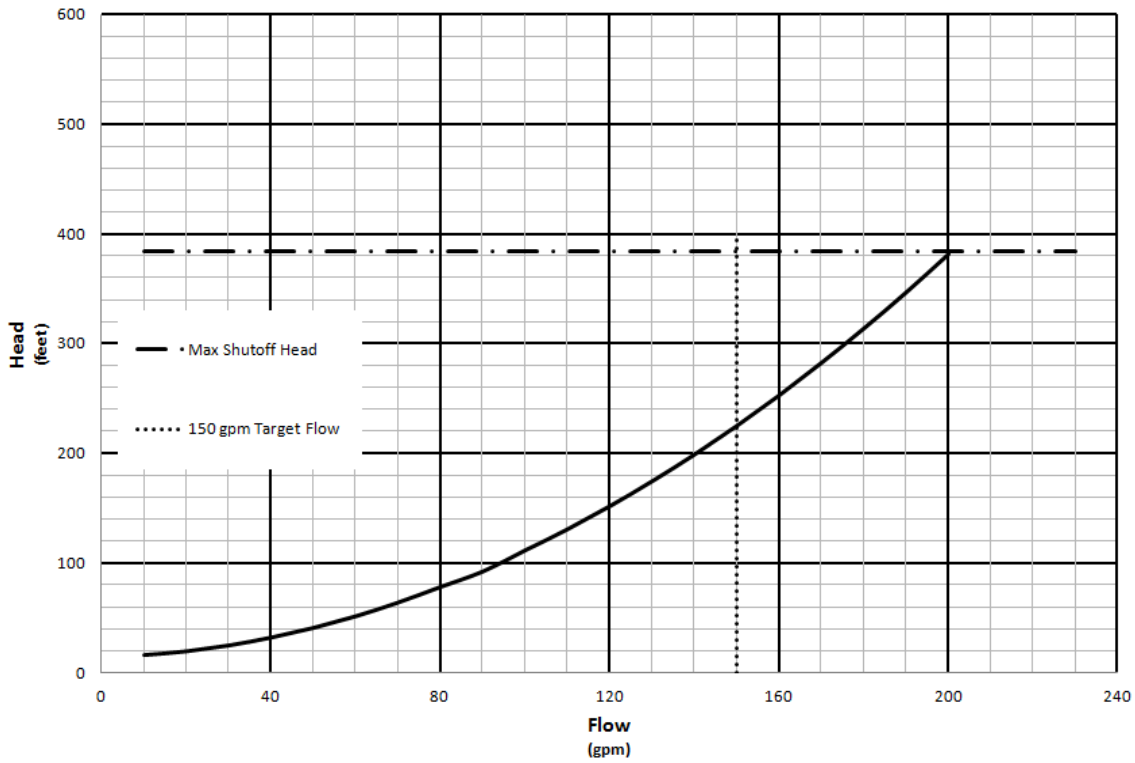

Figure 3-2. Pump System Curve

3.2.3 Pump Physical Characteristics

The following physical characteristics shall apply to all pump types/designations, unless specifically identified otherwise.

3.2.3.1 Pump Assembly Physical Characteristics

1.) H-2-91943, Pump Assembly 8, Sheets 1, 2 and 3, only as referenced in this specification, represent the required pump dimensional configuration. Each pump will be installed into an underground pump pit, which is connected to the underground waste tank beneath it by a 12 inch diameter Schedule 40 riser pipe.

2.) The height of each pump and motor measured from the underside of pump flange plate, drawing H-2-91943, Item 55, shall not exceed 50 inches.

3.) The pump length below the underside of the pump flange plate, drawing H-2-91943, Item 55, shall be in accordance with Table 3-4. The first stage impeller shall be located as close as possible to the bottom of the pump. The design of the suction inlet shall minimize vortexing at lower liquid levels. No pump intake screen is required, however a threaded hole (e.g. same hole engaged by pump shipping bolt) shall exist at the intake of the pump for a future intake screen to be added by the Buyer.

The design of the suction inlet on the PUMP J type shall accommodate a 4 inch Schedule 40 pipe nipple as shown on H-2-91943 Item 50. Item 50 and the balance of the flexible "Pump Suction with Float" shown on H-2-91943 Sheet 1 is not part of the Seller's supply and will not be part of any testing by the Seller.

Table 3-4. Pump Length Dimensions

PUMP DESIGNATION	Length From Bottom of Pump Flange Plate (H-2-91943 Item 55) to Bottom of Pump (+/- 0.5 inches)
PUMP A	49'-0"
PUMP B	47'-0"
PUMP C	45'-0"
PUMP D	44'-6"
PUMP E	43'-0"
PUMP F	41'-0"
PUMP G	40'-0"
PUMP H	38'-9"
PUMP I	37'-0"
PUMP J	33'-0"
PUMP K	30'-0"
PUMP L	23'-0"

4.) The pump assembly that is below the pump flange plate shall not exceed 11-1/2 inches in diameter with respect to the pump centerline, such that the pump can pass freely through a 10 foot long section of 12 inch Schedule 40 pipe (tank riser) mounted on the Buyer's storage tank.

5.) The maximum weight of each completed pump assembly, including motor, and water (i.e., full column) shall not exceed 5,000 pounds.

6.) The pump flange plate, drawing H-2-91943, item 55, may be combined with the pump head into a one piece design. During pump installation, the two 1-1/8 inch radius cutouts in the pump flange plate engage the two 2 inch diameter dowels on the Buyer's pump adapter flange, drawing H-2-70549, detail XVI, located on the pit floor. The dowels are detailed on drawing H-2-57331, parts 1 & 2. There shall be no interference between the dowels and any part of the pump assembly above the flange plate.

7.) The pump discharge nozzle (PUREX nozzle) shall be located as shown on drawing H-2-91943, Sheet 1. Discharge pipe routing as seen in item 13 of drawing H-2-91943, is not applicable with the exception of the 3 inch nozzle, kick plate and reducer, items 31, 32, 41. See Section 3.2.3.5 for pump discharge drain line requirements. The Buyer will supply the PUREX nozzles as government furnished material (this configuration is an exception to API 610). The discharge pipe shall be welded directly to the pump discharge head, omitting the flange, item 30. Note that the Buyer supplied nozzle, item 31, is a duplex stainless steel (P-No. 10H material per ASME Section IX QW/QB-422), and may require modification (shortening of length) by the Seller as shown on H-2-91943, sheet 2.

8.) The height, location and orientation of the lifting bail assemblies attached to the pump flange plate shall be as shown on H-2-91943, Item 14. The Seller may use the detail design of the lifting bail assembly as shown on H-2-91943 if verified as suitable for the supplied pump by the Seller's lifting stress analysis.

9.) The pump flange plate gasket shall be 1/8 inch thick, full face, 60-70 durometer ethylene propylene cemented to the underside of the flange.

10.) All machined surfaces shall be 250 micro inches RMS finish or better.

11.) The design pressure of pressure-retaining components above the pump flange plate shall be 400 psig. The design pressure of all other pressure-retaining components shall be no less than the maximum pressure of the pump at shut-off when pumping fluid of the highest specific gravity specified herein.

12.) Threaded connections shall not be used in process piping located within the pump pit (above the pump flange plate).

13.) Threaded column connectors are preferred over flanged column connectors due to superior decontamination properties (see 3.2.3.1.17) and due to the reduced risk of hang up during pump installation and removal (see 3.5.1.16). The use of flanged connectors, other than a single flanged connection at the top of the column, must be justified by the seller as essential for strength or rigidity. A single flanged connection at the top of the column for final assembly convenience is permitted without justification.

14.) Threaded column connections shall be designed with a register fit or other means to eliminate accumulative manufacturing tolerances.

15.) If the pump column and bowl assemblies have flanged connections, they shall be bolted and the fasteners shall be lock-wired to prevent loosening. Other means of fastener locking shall be approved by the Buyer.

16.) Guides shall be provided, as appropriate, along the column or at projections, to prevent the projections from catching on the tank riser structure during installation or removal. Rough or sharp edges of guide fins shall be made smooth.

17.) The design shall minimize the collection or holdup of waste on the external pump surfaces. The design shall allow for easy wash-down of external surfaces during removal

by the Buyer's spray nozzles located in the riser. The pump shall be self-draining with no internal or external traps or pockets which can retain liquid when the pump is lifted from the tank.

18.) A passively vented air-gap shall exist around the line shaft between the base of the motor housing and the pump line shaft secondary sealing system.

19.) The pump assembly discharge piping that is above the pump flange plate shall be constructed out of carbon steel or stainless steel seamless pipe.

20.) The pump shall be capable of being internally flushed through the discharge up to a flow rate of 120 GPM without causing damage to the pump.

21.) Any intermediate electrical enclosure supplied with the pump, if applicable, shall meet NEMA Type 4 standards. Electrical enclosures as part of the pump motor shall comply with the requirements listed in Section 3.2.3.3.

3.2.3.2 Pump Internal Physical Characteristics

1.) The process lubricated bearings shall be designed to withstand an abrasive slurry and to tolerate dry start-up.

2.) The rotor assembly shall be sized and supported to minimize vibration and promote maximum bearing life.

3.) Impeller design shall be the Seller's choice but shall be free draining. The impellers shall be dynamically balanced in accordance with API 610 (ISO 1940-1, Quality Grade G2.5).

4.) The impellers shall be mounted on a common shaft and secured to prevent rotation relative to the shaft in either direction and to prevent axial movement in either direction. Tapered collets are an acceptable securing device.

5.) The pump shall be designed such that there is no significant (first or second, as a minimum) critical speed (wet) within 25% (above or below) of the operating speed, as verified in the Seller's calculations.

6.) Shafts shall be machined and finished throughout their length so that the total indicated run-out is not more than 0.0005 inch per foot and 0.003 inch over the shaft length.

7.) Line shaft couplings shall be the Seller's choice.

8.) The line shaft sealing system shall be designed to preclude leakage into the pit. Any process leakage that passes the primary sealing system shall be directed back into the tank (i.e. leakage cannot pressurize the void space between the primary and secondary sealing systems). A secondary sealing system shall be provided to protect against external leakage in the event of primary sealing system wear or failure. A physical barrier (e.g. line shaft slinger) shall prevent a primary seal failure from directly spraying against the secondary sealing system.

9.) Mechanical seals or packing which require additional ancillary support systems (e.g. gas lubricated seals) or periodic maintenance are not permitted. Pump design should consider utilizing passive sealing systems.

10.) The pump column shall be self-venting.

3.2.3.3 Pump Motor Physical Characteristics

1.) The motor may be of either vertical hollow shaft or vertical solid shaft design (Seller's choice).

2.) Solid shaft motor shall have a maximum permissible face run-out of .003 inch total indicated run-out (TIR) and maximum register-to-shaft concentricity of .004 inch TIR. Hollow shaft motors shall utilize a steady bushing.

3.) The motor operating rotations per minute (RPM) shall be nominally 1,800. Use of a higher RPM motor shall require approval from the Buyer.

4.) To minimize electrical infrastructure upgrades to install these replacement pumps, the motor rating shall be equal to or less than 30 HP. If horsepower requirements cannot be limited to 30 HP in order to meet the requirements of this specification, the Buyer shall be contacted prior to proceeding with the design. This will allow engineering to evaluate the use of a higher horsepower motor versus changing the performance requirements detailed in this specification.

5.) Motor horsepower shall be non-overloading when operating at any point on the pump curve, with the fluid specified in Section 3.2.1 of this specification.

6.) The motor arrangement shall allow vertical access to the 3 inch connector attached to the pump discharge nozzle. The connector is shown in Figure 3-1.

7.) The electrical equipment that comprise the pump assembly shall be accepted, certified, listed, labeled, or otherwise determined to be safe by an OSHA Nationally Recognized Testing Laboratory (NRTL) (as indicated by an NRTL label applied by the manufacturer). If the NRTL label cannot be provided, the pump assembly, if there is an Underwriters Laboratories (UL) standard for the piece of equipment, shall be field evaluated and labeled by an OSHA recognized NRTL representative.

8.) The motor shall be designed to meet the requirements of NFPA 70, Section 501, for use in a Class 1, Division 2 location.

9.) The motor shall be provided with a 50-foot pigtail power cable. A portion of the cable will be located above ground. The cable shall be selected and sized to meet National Electric Code (NEC) requirements. The pigtail shall be flexible, rated for 90°C or greater, and shall consist of four conductors (3 phase conductors and 1 ground) in an outer cable jacket. The outer jacket of the cable shall meet the requirements of NEC Art. 400 for outdoor, rough, and wet locations. The cable connection at the motor junction box shall have a wire mesh grip type strain relief. Motor wiring leads shall be tagged with line

phase designations used to obtain proper motor and pump rotation. Red/L1, Yellow/L2, Blue/L3, clockwise left to right.

10.) The motor shall be in accordance with NEMA Standard MG-1. The motor shall be totally enclosed fan-cooled (TEFC), and shall be 460 V, 3-phase, 60 Hz. The insulation system shall consist of minimum Class F, or better, insulation material, extra end-turn bracing and Class H spike resistant wire. The resultant system shall withstand 1000 V transients without premature motor failure and have no cable limitations in motor application. The motor frame shall be cast iron.

11.) The motor shall be provided with an anti-reverse rotation device.

12.) Motor bearings shall be constructed and lubricated to maximize service life. The motor thrust bearing can carry the thrust load of the pump as well as the rotor weight.

13.) The motor and associated electrical components shall be sized/capable of start-up utilizing a direct on line (across the line) motor starter. A variable frequency drive shall not be paired to the pumps supplied by the Seller.

3.2.3.4 Pump Rotation Interface Characteristics

Due to prolonged durations without significant use, the ability to manually rotate the pumps once installed is prudent to maximize their service life and minimize the occurrence of seized pump shafts at start-up. The cost and schedule to allow workers to physically reach a traditional motor housing underneath large containment structures (i.e. cover blocks) is significant. Therefore a modification to the standard vertical pump motor housing is required to allow access via a cover block penetration located directly above the pump motor. Pump rotation will be performed via a long reach socket through a 3 inch diameter pump pit cover block penetration located directly above the pump assembly.

1.) The motor lid/cover shall be configured to allow for the manual rotation of the pump to be performed remotely without the lid/cover being removed from the motor. Design/alterations of the pump motor lid to allow the rotation of the pump shall be approved by the Buyer.

2.) The motor lid/cover shall prevent the intrusion of water or debris from entering the top of the motor housing through the cover block penetration.

3.) The modification to the motor lid/cover may invalidate the existing NRTL certification of the motor assembly. The Seller shall be responsible for reestablishing a NRTL certification (e.g. NRTL field evaluation of item to the applicable standards) of the motor assembly prior to shipment. See Section 3.2.3.3.7 for electrical equipment requirements.

4.) The pump rotation attachment point shall not require an interface device (e.g. socket) to be larger than 2-1/2 inches in diameter without the Buyers approval.

3.2.3.5 Pump Discharge Drain Characteristics

Due to elevated liquid levels in certain Hanford waste storage tanks at a high specific gravity, the flush water used to back flush the pump after use cannot drain out of the pump column and the adjoining piping connected to the pump discharge (manometer effect). This causes an issue for both piping freeze protection and long term corrosion of safety significant components. Pump designation types A thru H as listed in Table 3-4 shall contain an adjoining drain line from the discharge head/piping routed back to the tank via the same riser the pump is installed into. See Appendix A for conceptual arrangement of a potential drain line configuration.

1.) The drain line shall contain two unions to allow the installation/replacement of a piping spool piece (not the responsibility of the Seller) when required for operation. The piping spool piece shall contain a 1-1/2 inch 2-way ball valve to allow drainage of the discharge piping after use.

2.) The unions and applicable plugs shall be safety significant and rated for the design pressure and temperature as specified in Section 3.3.1. The unions/plugs shall conform to the standards and specifications of an ASME B31.3 listed component.

3.) The unions shall be orientated so that the replacement piping spool piece contains the non-metallic components (e.g. O-rings).

4.) The pumps shall be tested and delivered with plugs installed into the drain line unions. The Buyer will design and install piping spool pieces as required prior to installation of the pump.

5.) The discharge and drain piping shall be located as close to the pump flange plate while still allowing the discharge piping to free drain.

6.) The drain piping arrangement/design will require Buyers approval.

3.2.4 Reliability

The pump will be placed in a tank and cannot be serviced or repaired. Each transfer pump and associated equipment is expected to operate for up to 5,000 hours of intermittent operation over a 10 year period without any maintenance other than bumping or flushing under the normal operation conditions specified in Section 3.2.1 Table 3-1 and 3.2.5 Table 3-2. The pump motor shall be located within the pump pit while the pump column and pump bowl sections will reside in the tank vapor space and tank liquid. See Table 3-5 for installed environmental condition.

3.2.5 Environment

3.2.5.1 Installed Environment

Each pump and motor shall be able to withstand the conditions listed in Table 3-5, as applicable. The motor shall be able to withstand the conditions listed for the pump pit location. The pump column and its internal components shall be able to withstand the conditions identified in the tank vapor space and tank liquid locations as well as the chemical constituents identified in

Section 3.2.1 Table 3-2. The in-tank headspace pressure due to the effect of active ventilation systems range from +5.0 in. W.G. to –6.0 in W.G. Elevation in the region of equipment installation is 687 feet above sea level.

Table 3-5. Pump Operating Environmental Conditions

Location	Temperature	% Relative Humidity	Radiation Exposure in Rad	
			Per Hour	10 Years Accumulation
Pump Pit	15 to 140 °F	0 to 100	50	4.4×10^{6}
Tank Vapor Space	50 to 200 °F	0 to 100	400	3.4×10^{7}
Tank Liquid	200 °F max	N/A	500	4.4×10^{7}

3.2.5.2 Ex-Tank Environment

Equipment located outside the tank prior to installation shall be designed to allow for temporary storage in an unprotected outdoor environment. The equipment may be exposed to ambient temperatures ranging from -25 to 115°F, relative humidity up to 100%, blowing sand and dust, rain, snow, and full solar exposure. Precautions shall be identified by the Seller in their storage instructions to account for these conditions.

3.3 Design and Construction

API Standard 610, or proven alternative design, shall be considered an integral part of this Specification, and shall be complied with except as modified or supplemented herein. The pump shall be designed and constructed in accordance with the manufacturer's standard practices and approved design and fabrication details.

Pressure containing piping and fittings above the pump flange plate shall be designed, fabricated, tested, and inspected to the requirements of ASME B31.3 for normal fluid service, as applicable.

The design of the pump pressure casing shall be in accordance with the requirements of ASME Code Section VIII, Division 1. Materials and acceptable stresses shall be in accordance with the requirements of ASME Code Section II. Manufacturers' data report forms, third party inspections, and stamping, as specified in the code, are not required.

The Seller shall prepare an Initial Pump Design Report that documents the material selection, design, analysis, component specification data, electrical product acceptability, drawings for the pump and motor driver, and a 3-dimensional computer aided design solid body model of the pump assembly.

The Buyer will provide the Initial Design Report to an independent qualified registered professional engineer for review to ensure the design complies with the requirements listed in the Washington Administrative Code (WAC) 173-303-640, *Tank Systems*, and 40 CFR 265.192, *Design and Installation of New Tank System of Components*. The design requirements and

analysis required in this section shall provide a sufficient technical basis for the suitability of the pumps to meet the applicable codes and regulations previously listed.

Following completion of fabrication, assembly and testing, the initial pump design report shall be revised to include all testing procedures and results documentation; welding procedures, welder qualifications and NDE procedures with NDE personnel qualifications; chemical and physical test reports; inspection/examination reports; updated vendor data and as-built drawings including a finalized 3-dimensional computer aided design solid body model of the pump assembly; installation, operation and maintenance manuals; and spare parts list. This revised/updated package shall constitute the Final Pump Design Report.

The Buyer will provide the Final Design Report to an independent qualified registered professional engineer for review to ensure the completed components which will include design, fabrication, and testing complies with the requirements listed in the WAC 173-303-640 and 40 CFR 265.192. The design, fabrication, and testing requirements provided in this specification shall provide a sufficient technical basis for the suitability of the pumps to meet the applicable codes and regulations previously listed.

3.3.1 ASME B31.3 Design/Analysis

Pressure containing piping and fittings above the pump flange plate shall be designed, to the requirements of ASME B31.3 for normal fluid service. The Seller shall provide a piping analysis to ensure the applicable piping and fittings above the pump flange plate are within the allowance of the code to support a design pressure of 400 psig at 200°F.

Factors such as corrosion shall be considered in sizing materials to ensure that the intended design life is met. For carbon steel piping the corrosion-erosion allowance used shall be 1.2 mils per year and shall be 0.2 mils per year for austenitic stainless steel for the expected life of the system. For ASME B31.3 design of pressurized piping components above the pump flange plate, utilize a design life of 30 years.

For the purposes of the piping analysis, the Seller shall assume a 250lb mass attached to the pump discharge nozzle to represent the weight of a connecting jumper. The Seller shall perform the required code case for both thermal contraction and expansion using the following temperature inputs:

- Minimum ambient temperature is -25°F.
- Ambient temperature of 60°F to be used for thermal expansion (60°F to 200 ^{o}F thermal expansion range).
- Ambient temperature of 80°F to be used for thermal contraction (80°F to -25°F thermal contraction range).

The Seller shall specify the maximum allowable loading (forces and moments in the X,Y,Z directions) on the discharge nozzle which will result in the adjoining discharge piping to reach the ASME B31.3 code allowable stress for sustained and occasional loads.

3.3.2 Seismic Design/Analysis

The Seller shall provide a seismic analysis to ensure the pump maintains structural integrity after a seismic event. For the structural analysis the following input requirements and assumptions shall be used:

a. Design criteria, load combinations, allowable stresses and strength requirements shall comply with the International Building Code (IBC) and American Society of Civil Engineers (ASCE) 7.

b. Design spectral response accelerations applicable:

S_{DS} (short periods)	Vertical = 0.346g	Horizontal = 0.588g
S_{D1} (1 second period)	Vertical = 0.098g	Horizontal = 0.192g

c. IBC Seismic Use Group III with Importance Factor of 1.5

d. The pump pit floor/riser is assumed to be rigid.

e. The pump is restrained by gravity in the vertical direction (i.e. the pump is not bolted down).

f. The weight of the pump column shall include column water.

g. Sloshing of the tank fluid against the exterior of the pump column during a seismic event need not be considered.

h. The discharge piping shall not exceed allowable stresses limits for occasional loads identified in ASME B31.3.

i. It is not a design requirement for the pump assembly, below the pump flange plate, to be operational following a seismic event; however, it is a design requirement for the pump assembly to retain its structural integrity and to be removable from the waste tank following a seismic event.

3.3.3 Rotor Dynamic Analysis

The Seller shall provide a rotor dynamic analysis supporting the rotating element design and support features, ensuring minimum vibration and high reliability. This analysis shall be used to verify that there are no damaging responses in the lateral or torsional rotor dynamic modes of vibration at the operating speed of the pump.

3.3.4 Critical Speed Analysis

The Seller shall provide a natural frequency analysis to demonstrate that there is no significant (first or second, as a minimum) critical speed (wet) within 25% (above or below) of the pump assembly operating speed.

3.3.5 Pump Assembly Installation and Lift Point Design/Analysis

Installation of the pump will be by two mobile cranes. The fully assembled pump and motor will be lifted from the horizontal to the vertical position using lifting attachments on the pump flange plate and a temporary attachment point on the pump column. The pump will then be lowered through a 12-inch (inside diameter) riser into the waste storage tank.

All crane and rigging shall be in accordance with DOE/RL-92-36 the Hanford Site Hoisting and Rigging Manual, and the Buyer's procedures. The manufacturer may use the following specifications for hoisting and rigging or provide lifting instructions proprietary to the manufacturer.

3.3.5.1 Lifting Attachments and Equipment Design

The lifting attachment(s) on the equipment (lifting eyes, lugs, ears, etc.) and the lifted item shall be designed in accordance with RPP-8360 except ASME BTH-1 should be used to verify lifting lugs hole diameter compared to the shackle pin diameter (the D to d ratio). The design shall consider equipment orientation, i.e., horizontal to vertical. Other appropriate design standards may be used with the approval of the Buyer. Hoisting and rigging device or equipment designs, tests, and reports shall be submitted to the Buyer for safety evaluation and approval during design review.

Lifting design shall include load conditions for lifting the load and rotation of the load from horizontal to vertical. The suspended assembly shall hang true vertical end to end. The design shall also address lifting attachments, all associated lifting and rigging equipment.

3.3.5.2 Below-the-Hook Lifting Device Requirements

Structural and mechanical below the hook (BTH) lifting devices, as defined by ASME B30.20, Below-the-Hook Lifting Devices, shall conform to the requirements of ASME B30.20. The design of BTH devices shall conform to the requirements of ASME BTH-1, Design of Below-The-Hook Lifting Devices. Load supporting devices not clearly defined as BTH shall be clarified by contacting the Hanford Site Hoisting and Rigging Committee for interpretation. Documentation and calculations shall be submitted as evidence that the appropriate welding codes, qualified welders, non-destructive examination procedures, testing requirements, etc., have been used. Calculations will be required for the design of all BTH devices and associated lifting points. Below-the-hook lifting devices shall be load tested to 125% of the rated load as required by DOE-RL-92-36. All custom designed Hanford Site lifting devices shall be rated for cold weather temperature of at least 10 degrees Fahrenheit.

BTH lifting devices shall be provided with markings in accordance with ASME B30.20 and tags in accordance with DOE/RL-92-36. In addition to the requirements of ASME B30.20 and DOE/RL-92- 36, the marking shall include Hanford drawing number (if applicable), special lifting instructions, and clearly indicate lifting attachments. The marking shall be in the form of a name tag, name plate, or other permanent marker.

3.3.5.3 Critical Welds

All critical welds on the equipment shall be identified in the design media. For the purpose of this requirement, critical welds are defined as those welds whose failure could result in loss of load or loss of load control. All critical welds on lifting devices shall be full-penetration welds, if possible, and shall be verified by approved NDE.

3.3.5.4 Pump Handling

Lifting instructions and lift diagrams shall be provided. The lift diagram must show estimated weight and center of gravity. The lifted item must be level and plumb when suspended. The design shall consider the pump orientation, i.e., horizontal to vertical. All lift points, both permanent and temporary, shall be identified on the pump assembly.

The Seller shall provide a lift analysis to ensure the fully assembled pump can be lifted without distortion, damage, or exceeding allowable stresses. A temporary attachment point on the pump column at a location analyzed to prevent pump damage shall be clearly identified.

The Seller shall provide the 2 permanent lifting attachments on the pump flange plate (see Section 3.2.3.1.8), and shall detail any special handling requirements in the instruction manual to ensure that the pump assembly can be safely lifted and installed without damage to the pump or tank. All drawings and procedures required for pump installation/removal and operation shall be included in the manual for quick reference.

During the removal of long length equipment from waste tanks, the contaminated equipment is routinely wrapped in plastic making it difficult to determine the lower lift point location. A choke hitch using a polyester sling is normally used at the lower end of the equipment. It is important to provide a safety location, an area free of sharp edges or corners that could cut the sling, for the choke hitch attachment. An area free of sharp edges or corners, on the lower end of the equipment, shall be provided for attachment of a chock hitch during equipment removal.

The pump assembly shall be stored and transported utilizing a strong back to prevent damage while in the horizontal orientation. The Seller shall design and provide a strong back to allow the pump assembly to be repositioned, loaded, and off-loaded from a truck trailer via three methods:

- A single crane utilizing a spreader bar with rigging attached to designated strong back lift points.
- Two cranes utilizing a designated lift point on each end of the strong back.
- Two forklifts utilizing designated engagement sleeves along the strong back.

All lift/attachment points shall be designated in the Shipping and Handling Plan (See Section 6.3).

3.3.6 Materials

Materials shall be selected by the Seller based on acceptable performance when subjected to the environmental exposures described in Sections 3.2.1 and 3.2.5 as applicable. Material selection shall be identified within the design review data for Buyer review, and material certification data shall be submitted prior to shipment for Buyer approval. Material identification shall include the applicable ASTM specification number and any proposed supplementary feature that is listed as optional in the ASTM specifications. Material certification shall present the results of chemical analysis and physical tests required in applicable ASTM specifications. Brass, bronze, and copper base materials, if used, shall not come in contact with the waste tank fluid. The use of aluminum is not acceptable. The materials of construction shall be chosen to prevent differential thermal expansion of the individual pump components (i.e. shaft and column) from adversely affecting the performance of the pump over the maximum range of operating temperatures.

All major pressure boundary and rotating parts shall be furnished to ASTM material specifications and shall include Certified Material Test Reports (CMTRs), as a minimum, for pressure boundary parts above the pump flange plate. Pressure boundary parts above the pump flange plate are considered safety significant. The critical characteristics of those items include the design pressure, design temperature, and material compatibility to the tank waste.

Materials used for other parts shall be clearly identified on the bill of material as to material type and grade; however, CMTRs are not required. Materials shall be non-asbestos, non-absorbent and suitable for the chemical and radiation environment in which they are used. All elastomers used shall be approved by the Buyer. All elastomers used along the pressure boundary above the pump flange plate are considered safety significant and must be in compliance with TFC-ENG-STD-34, *Standard for the Selection of Non-Metallic Materials in Contact with Tank Waste*, as an acceptable nonmetallic material for applications with confined geometry and detectable leakage. Chemical and physical properties of the elastomers shall be suitable for the chemical and radiation environment in which they are to be used.

3.3.7 Drawings and Manuals

As-built, detailed, dimensioned assembly drawings shall be submitted to the Buyer for approval. Drafting shall be done according to applicable ASME Y14 series standards (ASME Y14.1, Y14.2M, Y14.3M, Y14.5M and Y14.38). As-built dimensions shall include the following at a minimum:

- Distance from the bottom of the pump to the base of the pump flange plate (not including the gasket thickness).
- Distance from the bottom of the pump flange plate (not including the gasket thickness) to the top of the motor.
- Dimensional verification of discharge nozzle in X, Y, Z orientation per H-2-91943 Sheet 1.

- Dimensional verification of discharge nozzle elevation relative to the discharge piping (as shown on H-2-91943 Sheet 2 Item 13).

- Dimensional verification of pump flange plate features with a +/- 1/32 inch or +/- 1/16 inch tolerance per H-2-91943 Sheet 3 Item 55. Note that if pump motor stand does not bolt to Item 55, drilled and tapped holes are not required to be dimensioned.

- Distance from the end-face and applicable centerlines of each union to a single datum to allow the fabrication of future piping spool pieces.

All component parts shall be listed in the bill of materials, referring to the applicable material specifications or manufacturer and part number or supplier's fabrication drawing.

A manufacturer's Installation, Operation and Maintenance (IOM) manual shall be supplied with the pump. Instruction manuals shall contain storage, installation/removal, start-up, operation and maintenance instructions for the pump and all associated equipment. As discussed in Section 3.3.5.4, lifting instructions including lift diagrams shall be included in the IOM manual.

3.3.8 Fabrication/Assembly Processes

Welding of transfer pump pressure-containing components or any repairs to such parts shall be performed in accordance with ASME B31.3 for normal fluid service.

Welding of structural members, as well as any repairs to such parts, shall be performed in accordance with the applicable AWS welding standard (i.e. AWS D1.1 for steel or AWS D1.6 for stainless steel) for statically loaded structures, as applicable.

Machining or grinding of stainless steel shall be done with tools that have never come in contact with materials other than stainless steel. Wire brushing of stainless steel shall be done using stainless steel brushes that have never been used on materials other than stainless steel.

Metallic material-handling devices used for machining, positioning, supporting, welding, etc. that come in contact with stainless steel shall be made of stainless steel. It is acceptable to use high-strength carbon steel clamping devices such as machine chuck jaws on stainless steel, provided the Seller has a program or procedure for ensuring that the stainless steel has not been contaminated by the carbon steel. This procedure shall be available at the Seller's facility for the Buyer's review.

3.3.9 Cleaning and Painting

1.) Before delivery to the site, the pump and all associated components shall be clean to the extent that extraneous materials, such as those listed below, are not present.

    - Metallic or other dusts (shop dust), chips, and turnings

    - Abrasive particles or dirt

    - Weld splatter

- Rust and other loose corrosion products
- Magnetic/liquid penetrant residues, dye check, etc.
- Foreign material, such as paper, plastic, wood, tape or tape adhesive
- Cutting oils
- Excess lubrication grease and oil
- Marking dyes

2.) Cleaning solutions shall not contain halogenated compounds. Solvents and cleaning solutions used on stainless steel shall not exceed 50 ppm for chlorides.

3.) Mechanical cleaning tools used on stainless steel shall not have been previously used on carbon steel or any other materials that would contaminate stainless steel surfaces.

4.) The motor shall receive the manufacturer's standard coating system. Color shall be gray.

5.) Exposed carbon steel surfaces above the riser flange shall be painted gray with an epoxy paint. Powder coating is an approved alternative to paint, color shall be gray.

6.) Stainless steel components do not require painting except as needed for identification or for targeting. Paint used on stainless steel shall be epoxy-phenolic.

7.) The following areas of the pump shall be painted yellow for targeting.

- A 1-1/2-inch band around the top of dowel guides/holes
- Nozzle kick plate
- The top portion of lifting bails

8.) Identification shall be painted on the pump as described in Section 3.3.11.

3.3.10 Special Tools

Special tools and fixtures required to disassemble, assemble, lift, or maintain the pump or associated components shall be included in the quotation and furnished with delivery of the unit. Each tool shall be labeled to indicate its intended use, with instructions in the manual on its use. If pump is to be placed, secured, and delivered utilizing a strong back fixture.

3.3.11 Marking

1.) The pump shall have a manufacturer's name plate with information identified in API 610. In addition to the information required by API, the name plate shall include the assembly weight (dry and wet), this Specification number and revision, and purchase order number.

2.) The pump identification number (serial number) shall be as stated in the procurement documentation. The pump identification number, this Specification number and revision, and the weight of the complete pump assembly (with driver) shall be painted on the motor frame or lifting bails. The numbers/letters shall not be less than 1 inch high block type, black on yellow background.

3.) The temporary lifting attachment point on the pump column shall be clearly marked.

4.) The center of gravity of the pump assembly shall be clearly marked on the pump column.

5.) Pump rotation arrow(s) shall be marked on the top of the motor bell housing.

4.0 QUALITY ASSURANCE REQUIREMENTS

4.1 Quality Assurance Program

The Seller shall comply with the quality assurance requirements stated in the Procurement Documents.

4.2 Qualifications

4.2.1 Welding Personnel and Procedures

Personnel and procedures for welding pressure-retaining components along with attachments thereto, shall have been qualified in accordance with ASME B31.3, paragraph 328.2 prior to the start of welding. Personnel and procedures for welding structural components shall have been qualified in accordance with the applicable AWS welding standard (i.e. AWS D1.1 for steel or AWS D1.6 for stainless steel) prior to the start of welding (welding qualifications and procedures per ASME B&PVC, Section IX are acceptable).

In lieu of qualification of WPSs, Standard Welding Procedure Specifications (SWPS) developed and controlled by the American Welding Society (AWS) and accepted in Article V of ASME Section IX may be utilized within the specific limitations of 328.2.2. The AWS is considered a responsible and recognized organization and prior Inspector (ASME B31.3, Section 340) approval is not required. If utilized, SWPSs shall be demonstrated and documented in accordance with ASME B31.3 and ASME IX (QW-100.1, Article V and Appendix E). Document demonstration tests using Form QW-485 or equivalent form. SWPSs shall be demonstrated prior to the start of welding. Documentation tests are considered synonymous with qualification of a WPS in accordance with ASME Section IX, QW-100.3 and the current edition and mandatory addenda of ASME Section IX shall be used.

A copy of welder performance qualification test results and renewal of qualification documentation shall be maintained at the jobsite for the Buyer's evaluation, if desired. A copy of the Weld Procedure Specifications, Procedure Qualification Records, and Supporting Demonstration Records, as applicable, shall be maintained at the jobsite for the Buyer's evaluation, if desired.

4.2.2 Welding Inspectors and Procedures

Visual weld examinations shall be performed and appropriate documentation prepared by Certified Welding Inspectors who have received certification in accordance with AWS QC1. Certified Associate Welding Inspectors, certified in accordance with AWS QC1, may perform examinations when under immediate direction of Certified Welding Inspectors. Qualification/certifications of CAWIs and CWIs under whom the examinations were performed, shall be included in the Pump Design Report.

Personnel performing nondestructive examination shall be certified in accordance with Seller's written practice, which shall meet requirements of ASNT-SNT-TC-1A. Level II or III personnel shall be used to interpret test results.

The Seller shall maintain a file containing personnel certifications and nondestructive examination performance procedures as applicable at the fabrication site for Buyer's evaluation, if desired.

4.3 Inspections and Tests

The Seller shall develop a fabrication, inspection, and test plan (FIT plan) that sequences the fabrication operations and denotes the Seller’s inspection and test points. The FIT plan shall be reviewed and approved by the Buyer prior to the start of fabrication. At the time of the review of the FIT, the buyer shall specify all applicable witness and hold points.

The Buyer reserves the right to witness all tests listed below and shall be given a minimum of ten (10) working days written notice prior to each test date. This includes the start of welding on components above the pump flange plate. It should be noted that third party inspectors may be required to be present during testing as the representative for the Buyer or an independent representative for the Buyer’s stakeholders. The following includes the witness/hold points for the Buyer and/or their representative for specific points in the fabrication/testing process:

- Welding and NDE of pressure retaining components above the pump flange plate.
- Hydrostatic pressure testing (Section 4.3.4)
- Vertical lift/clearance test (Section 4.3.5)
- Pre-pump run-in performance test (Section 4.3.6)
- Pump sealing system leak check (Section 4.3.7)
- Tank pump-out testing (Section 4.3.8)
- Pump minimum submergence startup test (Section 4.3.9)
- Pump run-in test (Section 4.3.10). Only the start and finish of the 24-hr run-in test need to be witnessed to ensure proper operation of the pump assembly.

- Post-pump run-in performance test (Section 4.3.11)

Any additional witness/hold points for the Buyer and/or their representatives shall be specified during their review and approval of the FIT plan.

Prior to the performance of these tests, the Seller shall submit a procedure for each test to the Buyer for review and approval. Test information recorded or calculated shall be documented and submitted to the Buyer.

Inspection/examination of the pump assembly shall be in accordance with API 610.

Water used for hydrostatic and performance testing shall be tested for chlorides if austenitic stainless steel wetted materials are present. The chloride content of the test medium shall not exceed 50 ppm for water temperatures of < 149 °F.

Measurement and Testing Equipment used in the tests shall comply with NIST H143.

4.3.1 Weld Inspection and Examination

Piping and containment welds, joints, and attachments thereto shall be examined in accordance with ASME B31.3, paragraph 341.4.1 for normal service. For piping pressure-retaining component welds above the mounting flange, volumetric examination [radiographic test (RT) or ultrasonic test (UT)] of welds where specified by ASME B31.3 shall be performed where possible (i.e., in-process examination shall not be specified). The cases where volumetric examination is not possible (e.g., orientation of the weld), the subject welds shall have documented in-process examination in accordance with ASME B31.3, paragraph 344.7 with liquid penetrant or magnetic particle examination specified for the root pass [see paragraph 344.7.1(e)] and will be identified as such on the fabrication drawings. Individual items described in paragraph 344.7.1 shall be documented (e.g., checklist format) for each in-process examination. The in-process examinations shall not be used to meet the required representation of the welder’s or the welding operator’s work unless necessary to meet the required representation of work.

Pressure retaining pump and piping welds located above the pump flange plate shall be magnetic particle (MT) examined if carbon steel or liquid penetrant (PT) examined if stainless steel at the final pass.

Inspection and examination of structural welds shall be performed in accordance with the applicable AWS welding standard (i.e. AWS D1.1 for steel or AWS D1.6 for stainless steel). Welding qualifications and procedures per ASME B&PVC, Section IX, are acceptable.

All welds shall be visually inspected as a minimum. Weld maps shall be prepared and submitted. Non-destructive examinations, including Visual, Penetrant Test, Radiographic Testing, or Magnetic Particle Test examinations, shall be recorded and submitted. Radiographic Testing film shall be included as part weld documentation submittal if Radiographic Testing was performed.

4.3.2 Megger Test

A megger test shall be conducted on the pump motor with the 50-ft pigtail power cable installed in accordance with ANSI/IEEE Standard 43 to establish a baseline for future tests to trend performance. The megger test shall be conducted between each phase and the ground at the voltage specified by the motor manufacturer (e.g. 500 VDC). The acceptable value is greater than or equal to the values stated in ANSI/IEEE Standard 43 and/or by the motor manufacturer. Continuity between the phases and measured megger resistances shall be recorded. Resistance measurements shall be corrected for temperature. One megger and continuity test shall be completed prior to the performance and run-in test(s). Another megger test shall be completed directly after the run-in test (Section 4.3.10).

4.3.3 Pump Motor Driver Testing

The motor shall be given the following testing listed below to demonstrate that it is free from mechanical and electrical defects. The testing shall be conducted in accordance with ANSI/IEEE Standard 112. This testing shall include:

- Typical tests on completed assembly motors per NEMA MG-1, Section 12.55.
- ANSI/IEEE Standard 112, Method B, dynamometer test
- ANSI/IEEE Standard 112, Locked rotor tests

4.3.4 Hydrostatic Test

Pressure retaining components above the pump flange plate shall be hydrostatically tested and documented in accordance with the requirements of ASME B31.3 for normal fluid service to satisfy a design pressure of 400 psig at a design temperature of 200°F. Non-metallic parts within the pressure retaining components above the pump flange plate shall be replaced when any observable leakage is detected following adjustments (e.g. re-torqueing the joint).

Each part of the pump that contains liquid under pressure under the mounting flange (bowls, threaded column, etc.) shall be hydrostatically tested in accordance with either the ANSI/HI Standards or the requirements of ASME B31.3 however this test for strength only (weepage from these joints is allowable).

4.3.5 Vertical Lift/Clearance Test

The fully assembled pump shall be lifted from the horizontal to vertical position, as described in Section 3.3.5, using the lifting bail assemblies and the temporary attachment point on the pump column. During the lift test, the deflection of the pump shall be monitored to evaluate if pump damage occurs, or is likely to occur, when lifted in accordance with the Seller’s lift procedure. The vertically oriented pump shall hang plumb such that it can be inserted or removed from a 10 foot long 12-inch diameter tank riser without interference with the riser. This shall be demonstrated by installing and removing the pump using a crane in a 10 foot long section of 12-inch Schedule 40 pipe which includes at least one circumferential weld.

4.3.6 Pre-Pump Run-In Performance Test

A performance test, performed prior to the pump run-in test, shall be conducted using the fully assembled transfer pump in accordance with HI 14.6, using the contract motor. The performance test shall obtain sufficient data points, including rated performance point and run-out, to plot a full performance curve at the rated speed. The following shall be recorded and/or calculated: Flow rate, total head, power input, pump efficiency, actual speed (rpm), motor amperage and voltage (one each phase), pump vibration, impeller setting and liquid level.

Following pump testing, the Seller shall prepare a certified correct pump curve reflecting pump performance at the discharge nozzle with water. Information shall include impeller type and size, number of stages, head/flow curve, and estimates of bhp @ maximum specific gravity, efficiency, and $NPSH_R$. Information shall include high- and low-end allowable operating regions and any limitations of operation.

4.3.7 Pump Sealing System Leak Check

The pump shall be operated at a low flow condition (lowest flow recommended by the Seller without causing damage to the pump assembly) at rated speed for a minimum of 5 minutes, or with approval by the Buyer, a duration recommended by the Seller. The pump sealing systems shall be inspected for leakage above the pump flange plate during the sealing system leak check. Leakage from the primary sealing system that does not directly return to the tank by design (see Section 3.2.3.2.8) is unacceptable. Any leakage from the secondary sealing system is unacceptable.

4.3.8 Tank Pump-Out Test

With the fully assembled transfer pump operating at its rated performance point, the water in the test pit shall be continuously lowered until the transfer pump breaks suction. The water temperature, test pit liquid level, and the elevation above the bottom of the pump where loss of suction occurs shall be recorded.

4.3.9 Pump Minimum Submergence Startup Test

With the fully assembled transfer pump intake located at the rated minimum submergence depth, the pump shall be started to verify that the pump will startup and meet the performance requirements listed in Section 3.2.2 Table 3-3.

4.3.10 Pump Run-in Test

A run-in test shall performed on the fully assembled transfer pump. The run-in test shall be conducted for a minimum of 24 hours of continuous operation, with the pump operating at the rated performance point. As a minimum, the following readings shall be determined and recorded every 30 minutes during the test: Flow rate, total head, power input, actual speed (rpm), motor amperage and voltage (on each phase), pump vibration, and liquid level.

A megger and continuity test in accordance with Section 4.3.2 shall be conducted after the run-in test.

4.3.11 Post-Pump Run-In Performance Test

A performance test, performed after to the pump run-in test, shall be conducted using the fully assembled transfer pump in accordance with HI 14.6, using the contract motor. The intention of this test is to validate that the pump run-in has not degraded the performance of the pump. The performance test shall obtain sufficient data points, including rated performance point and run-out, to plot a full performance curve at the rated speed. The following shall be recorded and/or calculated: Flow rate, total head, power input, pump efficiency, actual speed (rpm), motor amperage and voltage (one each phase), pump vibration, impeller setting and liquid level.

Following pump testing, the Seller shall prepare a certified correct pump curve reflecting pump performance at the discharge nozzle with water. Information shall include impeller type and size, number of stages, head/flow curve, and estimates of bhp @ maximum specific gravity, efficiency, and $NPSH_R$. Information shall include high- and low-end allowable operating regions and any limitations of operation.

5.0 DOCUMENT SUBMITTAL

Required submittals are identified and listed on the procurement Master Submittal Register (MSR). Table 5-1provides a summary of these submittals. The MSR identifies the minimum submittals required by this specification and identifies when the submittals are required to be submitted in the procurement process. The MSR included with the purchase order will constitute the governing MSR.

Submittals shall be provided using the TOC Incoming Letter of Transmittal (form A-6005-315). All transmittal subject headings shall contain, at a minimum, the subcontract number, submittal number identified by the MSR, and submittal description.

Submittals shall be provided in electronic format unless available only as a hard copy. Electronic submittals may be sent to TOCVND@rl.gov or delivered via a WRPS designated File Transfer Protocol (FTP) site. Electronic formats must be non-password protected in one of the following formats:

- Microsoft®[2] Office Compatible
- Portable Document Format (PDF)
- Tagged Image File Format (TIFF)
- Graphics Interchange Format (GIF)
- Joint Photographic Experts Group (JPEG)
- Windows Media Video (WMV)
- Moving Picture Expert Group (MPEG)
- Extensible Markup Language (XML)
- HyperText Markup Language (HTML)
- Comma Separated Values (CSV)
- Text (TXT)
- Initial Graphics Exchange

[2] Microsoft is a registered trademark of Microsoft Corporation, Redmond, Washington

- Standard for the Exchange of Product Model Data (STEP)
- Specification (IGES)

All deliverable documentation shall be complete, accurate, legible, and reproducible. Before delivery, design media and documents shall be reviewed by qualified Subcontractor personnel for technical adequacy and appropriate content in accordance with the Subcontractor's Quality Assurance procedures. The Subcontractor shall attest, in writing, to the accuracy and completeness of the information contained in the final deliverables.

Deliverables shall be subject to approval by the BTR. Deliverables shall comply with this specification and technical basis documents and other requirements identified herein.

Table 5-1. Summary of Submittals

Item	Title	Purpose	When required
1	Schedule	Pre Evaluation	Per MSR (see Section 5.1)
2	Proposal Data	Pre Evaluation	Per MSR (see Section 5.1)
3	Initial Pump Design Report	Approval	Per MSR (see Section 5.1)
4	Fabrication, Inspection, and Test Plan	Approval	Per MSR (see Section 5.1)
5	Welder Performance Qualifications	Approval	Per MSR (see Section 5.1)
6	WPSs, PQRs, SWPSs, and SWPS Demonstration Records	Approval	Per MSR (see Section 5.1)
7	CWI and CAWI Certifications	Approval	Per MSR (see Section 5.1)
8	NDE Personnel Certification Records	Approval	Per MSR (see Section 5.1)
9	Test Procedures	Approval	Per MSR (see Section 5.1)
10	Certified Test Data and Reports	Approval	Per MSR (see Section 5.1)
11	Inspections and Examination Results	Approval	Per MSR (see Section 5.1)
12	Installation, Operation, and Maintenance Manuals	Review/Information	Per MSR (see Section 5.1)
13	Preservation, Packaging, Shipping, Storage and Lifting Plan	Approval	Per MSR (see Section 5.1)
14	Final Pump Design Report with As-Builts and Spare Parts List	Information	Per MSR (see Section 5.1)

5.1 Approval of Submittals

All Submittals transmitted shall include the designation in the Master Submittal Register (MSR) per TOC Vendor Processes stated in TFC-BSM-IRM_DC-C-07. Submittals are divided into two types: 1) those requiring "approval" (e.g., approval data or pre-purchase evaluation data); and 2) those "not requiring approval" (e.g., vendor information data). Submittals "not requiring approval" will be reviewed to verify completeness and adequacy for their intended purposes. A submittal requiring approval that is not approved is identified as: 1) "Not Approved Revise and Resubmit." The submittal is considered technically deficient, or incomplete, and therefore unacceptable. Resubmittal is required, hence the fabrication, procurement, or performance of procedures shall not proceed; or 2) "Approved with Exception." Fabrication, procurement, and performance may proceed, and resubmittal is required to verify incorporation of the exception. Submittals "not requiring approval" that are determined to be incomplete or inadequate will be

marked “Resubmit.” An explanation of the deficiencies will be included for corrective action by the Seller.

Approval by the Buyer does not relieve the Seller of responsibility for accuracy or adequacy of design under this specification.

If any revision has been made to previously submitted items, the Seller shall resubmit updated versions of said items for approval, in addition to the items listed above.

Certified data shall be defined to mean that the design adequacy of a given item (document, drawing, calculation, etc.) be verified by persons other than those who prepared the item. Each deliverable (drawing, calculation, etc.) shall have at least an originator's/preparer's signature and a checked-by or approved-by signature.

5.2 List of Submittals

This list of submittals along with relevant dates shall be kept as part of the MSR.

Identify each submittal by the purchase order number, pump designation letter (See Table 3-3), and Seller’s identification number.

1. (Item 1) Schedule: Submit a schedule showing design, fabrication, assembly, testing and shipment of the equipment after receipt of the order.

2. (Item 2) Proposal Data. The following information shall be submitted with the proposal package:

    a. Catalog/illustrative and descriptive data: Information shall fully describe the proposed pump and motor.
    b. Preliminary Pump Curves for the pump being offered: Information shall include impeller type and size, number of stages, and estimates of bhp @ maximum specific gravity, efficiency, and $NPSH_R$.
    c. Preliminary Cross-sectional/Outline Drawing(s) showing the details of the proposed equipment.
    d. Preliminary Bill of Materials for the proposed equipment.
    e. Preliminary General Arrangement Drawing(s) showing the details of the proposed equipment.
    f. Preliminary Motor Driver Data, including outline drawing and descriptive data.
    g. Preliminary Sealing System Drawing(s): Cross-section drawing, showing the “no-maintenance” type sealing system design.
    h. List of clarification/exceptions

3. (Item 3) Initial Pump Design Report. The following information shall be submitted with the proposal package:

    a. Pump Performance Data: Information shall include impeller type and size, number of stages, predicted head/flow curve, and estimates of bhp @ maximum

specific gravity, efficiency, and $NPSH_R$. Information shall include high- and low-end allowable operating regions and any limitations of operation.

b. Cross-Sectional/Outline Drawing(s)
c. Bill of Materials
d. General Arrangement Drawings(s): Detailed, dimensioned drawings, with specification information.
e. Motor Driver Data, including certified driver outline and dimensional drawings.
f. 3-dimensional computer aided design solid body model of the pump assembly
g. Sealing System Drawing(s): Dimensional drawing(s) with bill of materials.
h. Certified Coupling Drawings and Data (if required), showing manufacturer, bill of material, descriptive data and instructions.
i. Pump rotation Interface Drawing(s) (See Section 3.2.3.4): Dimensional drawings(s) with bill of materials.
j. Pump drain line arrangement (See Section 3.2.3.5): Dimensional drawings(s) with bill of materials.
k. ASME B31.3 Analysis (See Section 3.3.1)
l. Seismic Analysis (See Section 3.3.2)
m. Rotor Dynamic Analysis (See Section 3.3.3)
n. Critical Speed Analysis (See Section 3.3.4)
o. Installation and Lift Point Analysis (See Section 3.3.5)

4. (Item 4) Fabrication, Inspection, and Test Plan (See Section 4.3)

5. (Item 5) Welder Performance Qualifications (See Section 4.2.1)

6. (Item 6) WPSs, PQRs, SWPSs, and SWPS Demonstration Records (See Section 4.2.1)

7. (Item 7) CWI and CAWI Certifications (See Section 4.2.2)

8. (Item 8) NDE Personnel Certification Records (See Section 4.2.2)

9. (Item 9) Test Procedures. The following information shall be submitted:

    a. Pump Megger Test Procedure (See Section 4.3.2)
    b. Hydrostatic Test Procedure (See Section 4.3.4)
    c. Vertical Lift/Clearance Test Procedure (See Section 4.3.5)
    d. Pre-Pump Run-In Performance Test Procedure (See Section 4.3.6)
    e. Pump Sealing System Leak Check Procedure (See Section 4.3.7)
    f. Tank Pump-Out Test Procedure (See Section 4.3.8)
    g. Pump Minimum Submergence Startup Test (See Section 4.3.9)
    h. Pump Run-in Test Procedure (See Section 4.3.10)
    i. Post-Pump Run-In Performance Test Procedure (See Section 4.3.11)

10. (Item 10) Certified Test Data and Reports. The following test data and reports shall be submitted. Once approved, the test results shall become part of the Final Pump Design Report.

a. Pump Megger Test Results (See Section 4.3.2)
b. Motor Drive Test Results (See Section 4.3.3). In addition, provide the following curves:
    i. Torque and amps curve
    ii. Safe stall time curve (time vs. amps)
c. Hydrostatic Test Results (See Section 4.3.4)
d. Vertical Lift/Clearance Test Results (See Section 4.3.5)
e. Pre-Pump Run-In Performance Test Curves and Test Data (See Section 4.3.6)
f. Sealing System Leak Check Results (See Section 4.3.7)
g. Tank Pump-Out Test Results (See Section 4.3.8)
h. Pump Minimum Submergence Startup Test Results (See Section 4.3.9)
i. Pump Run-in Test Results (See Section 4.3.10)
j. Post-Pump Run-In Performance Test Results (See Section 4.3.11)
k. Certified Material Test Reports (See Section 3.3.6)

11. (Item 11) Inspection and Examination Results (See Section 4.3.1)

12. (Item 12) Installation, Operation, and Maintenance Manuals (See Section 3.3.7). IOM manuals shall become part of the Final Pump Design Report.

13. (Item 13) Preservation, Packaging, Shipping, Storage and Lifting Plan (See Section 6.3). Approved plan shall become part of the Final Pump Design Report.

14. (Item 14) Final Pump Design Report, including approved Items 3 through 11 and 13, and completed Item 12. Complete documentation and record of pump as described in Section 3.3. As-built drawings shall include items specified in Section 3.3.7.

6.0 PREPARATION FOR DELIVERY

6.1 Preservation and Packaging

All items shall be dried and cleaned to protect against rust and corrosion. All items shall be protected from dirt, soil, and moisture and packaged for long-term storage in a Level B storage facility (indoors/temperature controlled). All items shall be packaged, as required, to eliminate damage during shipping, handling, and storage. Temporary bracing, fixtures, or hardware installed to stabilize furnished items during shipment or handling (excluding packaging materials) shall be tagged or otherwise identified so that it can be removed before installation or operation of the item. Electrical cable ends shall be sealed and secured to prevent moisture entry into cable.

6.2 Marking

Packages shall be suitably marked on the outside to facilitate identification of the purchase order, the procurement specification, the package contents, and any special handling instructions.

6.3 Shipping and Handling

Pumps shall be shipped in accordance with the applicable DOT standards and in an orientation ready for lifting. Additional handling of the pump to orientate it for lifting is not acceptable. Transport and tie-down instructions and diagrams shall be provided. Calculations will be required for the design of all transport tie-down attachment points (if applicable). Lift points shall not be used for transport tie-downs. Transport tie-down points shall be identified on the pump.

The Seller shall be responsible for delivery of the pump(s) to the Hanford on-site storage warehouse to be off-loaded. The buyer shall be responsible for off-loading of the pumps utilizing the strong back designated lifting points provided by the Seller (See Section 3.3.5.4). The Seller shall recommend the preferred transportation method and provide protection of the equipment during transit and storage. The Seller shall submit to the Buyer for review and approval of a Shipping and Handling Plan that includes pump assembly preservation, packaging, shipping, storage, and lifting procedures. Buyer approval of the plan is required before packaging and shipment. If a special type of transportation to protect equipment is required, those devices shall be part of the Seller's package and identified as special equipment.

APPENDIX A. Pump Discharge Drain Line Arrangement Example

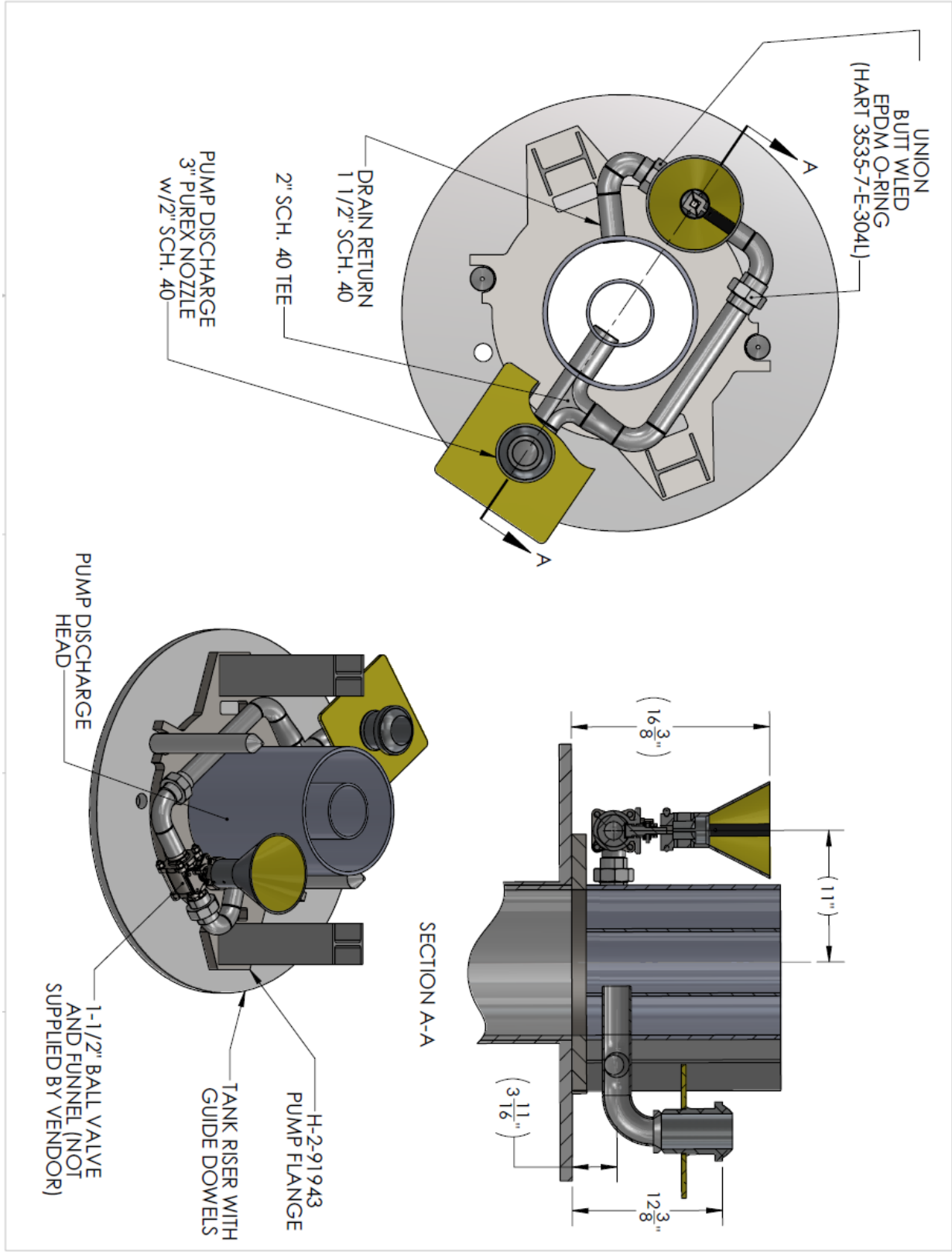
UNION
BUTT WLED
EPDM O-RING
(HART 3535-7-E-304L)
A
A
DRAIN RETURN
1 1/2" SCH. 40
2" SCH. 40 TEE
PUMP DISCHARGE
3" PUREX NOZZLE
w/2" SCH. 40
PUMP DISCHARGE
HEAD
(11")
(16 3/8")
12 3/8"
(3 11/16")
SECTION A-A
H-2-91943
PUMP FLANGE
TANK RISER WITH
GUIDE DOWELS
1-1/2" BALL VALVE
AND FUNNEL (NOT
SUPPLIED BY VENDOR)